RECAMBIOS MARINOS

YAMAHA SUZUKI
HONDA TOHATSU SELVA

FUERABORDA • OUTBOARD • FUORIBORDO • HORS-BORD

2023
2024



www.recambiosmarinos.es

RECAMBIOS MARINOS

YAMAHA SUZUKI HONDA TOHATSU SELVA

FUERABORDA • OUTBOARD • FUORIBORDO • HORS-BORD

2023
2024



www.recambiosmarinos.es

IMPORTANTE

LOS PRODUCTOS QUE APARECEN EN NUESTROS CATALOGOS SON VÁLIDOS Y COMPATIBLES CON LOS MOTORES Y TRANSMISIONES DE LAS MARCAS ORIGINALES QUE APARECEN EN CADA SECCIÓN. EN ALGUNOS CASOS TAMBIÉN SUMINISTRAMOS RECAMBIOS ORIGINALES. ESTA INFORMACIÓN APARECE CON LA REFERENCIA EN EL MOMENTO DE CONFIRMAR EL PEDIDO POR NUESTRA WEB.
LA IMÁGENES AQUÍ CONTENIDAS PUEDEN NO CORRESPONDER CON TOTAL PRECISIÓN AL PRODUCTO SUMINISTRADO. RECAMBIOS MARINOS, S.L.U. SE RESERVA EL DERECHO DE ANULAR O CAMBIAR PRODUCTOS SIN PREVIO AVISO.

IMPORTANT

THE PRODUCTS THAT APPEAR IN OUR CATALOGS ARE VALID AND COMPATIBLE WITH THE MOTORS AND TRANSMISSIONS OF THE ORIGINAL BRANDS THAT APPEAR IN EACH SECTION. IN SOME CASES WE ALSO SUPPLIED ORIGINAL SPARE PARTS. THIS INFORMATION APPEARS WITH THE REFERENCE AT THE TIME OF CONFIRMING THE ORDER BY OUR WEB. IMAGES CONTAINED HERE MAY NOT CORRESPOND WITH TOTAL ACCURACY TO THE PRODUCT SUPPLIED. RECAMBIOS MARINOS, S.L.U. RESERVES THE RIGHT TO CANCEL OR CHANGE PRODUCTS WITHOUT PRIOR NOTICE.

IMPORTANTE

I PRODOTTI CHE COMPAIONO NEI NOSTRI CATALOGHI SONO VALIDI E COMPATIBILI CON I MOTORI E LE TRASMISSIONI DEI MARCHI ORIGINALI CHE APPAIONO IN OGNI SEZIONE. IN ALCUNI CASI ABBIAMO FORNITO ANCHE RICAMBI ORIGINALI. QUESTA INFORMAZIONE RISULTA CON IL RIFERIMENTO AL MOMENTO DELLA CONFERMA DELL'ORDINE DA PARTE DEL NOSTRO WEB.
LE IMMAGINI QUI CONTENUTE POTREBBERO NON CORRISPONDERE ESATTAMENTE AL PRODOTTO FORNITO. RECAMBIOS MARINOS, S.L.U., SI RISERVA IL DIRITTO DI CANCELLARE O MODIFICARE I PRODOTTI SENZA PREAVVISO.

IMPORTANT

LES PRODUITS QUI FIGURENT DANS NOS CATALOGUES SONT VALIDES ET COMPATIBLES AVEC LES MOTEURS ET LES TRANSMISSIONS DES MARQUES ORIGINALES QUI SONT PRESENTES DANS CHAQUE SECTION. DANS CERTAINS CAS NOUS FOURNISSONS EGALEMENT DES PIECES DE RECHANGE ORIGINALES. CETTE INFORMATION EST MENTIONNEE AVEC LA REFERENCE SUR NOTRE SITE WEB. LES IMAGES CONTENUES DANS CE DOCUMENT PEUVENT NE PAS CORRESPONDRE AVEC UNE PRECISION TOTALE AU PRODUIT FOURNI. RECAMBIOS MARINOS SLU SE RESERVE LE DROIT D'ANNULER OU DE MODIFIER DES PRODUITS SANS PREAVIS.

• YAMAHA
REF --> R.O. / OEM 59 406

• SUZUKI
REF --> R.O. / OEM 435 533

• HONDA
REF --> R.O. / OEM 543 583

• TOHATSU
REF --> R.O. / OEM 587 630

• SELVA
REF --> R.O. / OEM 635 643

ÍNDICE accesorios	Accessories Table of contents	INDICE accessori	INDEX accessoires	
TX MARINE	TX MARINE	TX MARINE	TX MARINE	4
SOPORTES	STANDS	SUPPORTI	SUPPORTS	8
DIRECCIÓN MECÁNICA	STEERING SYSTEM	TIMONERIA MECCANICA	DIRECTION MÉCANIQUE	12
DIRECCIÓN HIDRÁULICA	HYDRAULICS STEERING SYSTEM	TIMONERIA IDRAULICA	DIRECTION HYDRAULIQUE	14
MANDOS UNIVERSALES Y ACCESORIOS	UNIVERSAL CONTROLS AND ACCESSORIES	CONTROLLI UNIVERSALI E ACCESSORI	COMMANDES UNIVERSELLES ET ACCESSORIES	17
SISTEMA DE GOBIERNO Y ACCESORIOS DE INSTALACIÓN	STEERING SYSTEM ET INSTALATION ACCESSORIES	SISTEMA DI GUIDA E ACCESSORI DIREZIONE	SYSTÈME DE DIRECTION ET ACCESSORIES D'INSTALLATION	20
CABLES MANDOS	CONTROL CABLES	CAVI COMANDO	CÂBLES DE COMMANDE	25
SISTEMA DE COMBUSTIBLE	FUEL SYSTEM	SISTEMA DI COMBUSTIBILE	SYSTÈME DE CARBURANT	27
FILTROS DE COMBUSTIBLE	FUEL FILTERS	FILTRO BENZINA	FILTRES À CARBURAT	29
SISTEMA ELÉCTRICO	ELECTRIC SYSTEM	SISTEMA ELETTRICO	SYSTÈME ÉLECTRIQUE	32
LUBRICANTES Y PINTURAS	LUBRICANTS ET PAINTS	LUBRIFICANTI E PITTURE	LUBRIFIANTS ET PEINTURES	36
ACCESORIOS Y HERRAMIENTAS DE INSTALACIÓN	ACCESSORIES AND INSTALATION TOOLS	ACCESSORI E ATTREZZI ISTALAZIONE	ACCESSOIRES ET OUTILS D'INSTALLATION	45
ESTABILIZADORES, ELEVADORES Y SEGURIDAD	HYDROFOIL STABILIZER AND SECURITY	STABILIZATORI, ASCENSORI E SICUREZZA	STABILISATEURS, POWER TRIM-LIFT ET SÉCURITÉ	54



AXONE NEMO

La primera diagnosis Smart en el mundo

Axone Nemo es un potente tablet diseñado para asegurar al mecánico un óptimo uso, tanto en el entorno de taller, como en las intervenciones en el exterior.
Permite efectuar operaciones de diagnosis a gran velocidad. El chasis de magnesio le proporciona una mayor robustez y rigidez ante los golpes, muy ligero con gran capacidad de disipación de la temperatura interna.
El software operativo IDC5 destaca todas sus características, además del "touch gesture" para alcanzar en poco tiempo las funciones deseadas.

The first Smart diagnosis in the world

Axone Nemo is a powerful tablet designed to ensure the mechanic optimal use, both in the workshop environment, as interventions abroad.
It allows to carry out diagnosis operations at high speed. The magnesium chassis provides greater robustness and rigidity against shock, very light with great capacity to dissipate the internal temperature.
The IDC5 operating software highlights all its features, in addition to the "touch gesture" to reach the desired functions in a short time.

La prima diagnosi Smart nel mondo

Axone Nemo è un potente tablet creato per assicurare al meccanico un ottimo uso, sia nelle officine sia negli internenti all'esterno.
Permette di effettuare operazioni di diagnosi a gran velocità. La scocca in magnesio gli dona una maggior robustezza contro i colpi, molto leggero.
Il software operativo IDC5 evidenzia tutte le sue caratteristiche, come il "touch gesture" per eseguire in poco tempo le funzioni desiderate.

Le premier outil de diagnostic intelligent au monde

Axone Nemo est une tablette puissante conçue pour assurer une utilisation mécanique optimale, aussi bien dans un atelier que lors des interventions à l'extérieur. Il permet d'effectuer des opérations de diagnostic à grande vitesse. Le chassis en magnésium offre une plus grande robustesse contre les chocs, très léger avec une grande capacité à dissiper la température interne. Le logiciel IDC5 met en évidence toutes ses fonctionnalités.

12" (2160 x 1440)
Intel Quad Core N3160
8 GB RAM
250 GB
WIFI double channel
Bluetooth 4.0 Low Energy
2 camera x 5 Megapixels

SOFTWARE IDC5

IDC5 es la última evolución de TEXA, gracias a la reescritura del código se incrementa la velocidad de trabajo, lo que garantiza una entrada de comunicación con la centralita casi inmediata. La nueva función "Esquemas eléctricos interactivos" permite consultar los esquemas eléctricos aprovechando las animaciones de los dispositivos implicados y generando un mapa interactivo con flujos de señales entrada o salida de centralitas.

IDC5 is the latest evolution of TEXA, thanks to the rewriting of the code the working speed is increased, which guarantees a communication input with the control unit almost immediately. The new function "Interactive electrical diagrams" allows consulting the electrical diagrams taking advantage of the animations of the devices involved and generating an interactive map with flows of signals input or output of control units.

IDC5 è l'ultima evoluzione di TEXA, grazie ai nuovi aggiornamenti, si incrementa la velocità di lavoro, che garantisce la comunicazione quasi immediata con l'unità di controllo. La nuova funzione "Diagrammi interattivi elettronici" permettono di consultare i diagrammi elettronici con l'animazione dei led generando una mappa interattiva con un flusso di segnali in entrata e in uscita della centralina.

IDC5 est la dernière évolution du célèbre logiciel TEXA, grâce à une importante réécriture du programme, la rapidité est encore augmentée, garantissant une entrée en communication presque immédiate avec les calculateurs. La nouvelle fonctionnalité appelée "Schémas Electriques Interactif" est très intéressante car elle permet de consulter les schémas électriques en exploitant les animations des dispositifs concernés et en générant une cartographie interactive avec les flux de signaux d'entrée ou de sortie des calculateurs.



Ref.				
RECAXONENEMO	Axone Nemo	Axone Nemo	Axone Nemo	Axone Nemo
RECD06591	Navigator TXB Evolution	Navigator TXB Evolution	Navigator TXB Evolution	Navigator TXB Evolution
RECD127X0	Axone Nemo + Navigator TXB Marine	Axone Nemo + Navigator TXB	Axone Nemo + Navigator TXB	Axone Nemo + Navigator TXB
RECZ06590PC	Navigator TXB + PC	Navigator TXB + Labtop	Navigator TXB + PC	Navigator TXB + Pc portable
REC3901775	Kit maleta para guardar cables de interface	Hand case for harnesses	Kit per cavi intergaccia	Valise pour ranger les câbles d'interface
RECAGA00M1	Contrato de actualización software (y renovación anual).	Software contract and annual renovation	Contratto software (e rinnovo annuale).	Contrat de mise à jour logicielle (et renouvellement annuel).

TEXA

NAVIGATOR TXB EVOLUTION & AXONE NEMO / PC



SRAM	16Mb
MEMORY	NAND Flash 8 GB
BLUETOOTH	

NAVIGATOR TXB EVOLUTION

La evolución de la diagnosis, diseñado y desarrollado especificamente para el ambiente Marino.

Las características del hardware lo compatibilizan con todos los protocolos actualmente existentes, su conector CPC de 16 polos integrados, permite el uso de todos los cables de diagnosis. Es compatible con AXONE NEMO y PC. Gracias a la tecnología Bluetooth el técnico podrá realizar una cómoda diagnosis sin cables de por medio, incluso desde el pantalán.

Extremadamente potente, permite al mecánico una gestión fácil de los archivos de mapa. Los estandares CAN soportados incluyen la posibilidad de gestión CAN single wire y un CAN controller más para la diagnosis sobre más redes.

Permite la grabación de la sesión de diagnosis en modalidad “pruebas dinámicas”, es decir con la embarcación en movimiento, para localizar averías específicas que no se podrían verificar en el amarre. La interfaz reconstruye una panorámica completa de la situación en la que la anomalía se ha verificado, proporcionando importantes elementos de análisis para identificar las causas de la avería.

The evolution of the diagnosis, designed and developed specifically for the marine environment.

The characteristics of the hardware make it compatible with all currently existing protocols, its integrated 16-pole CPC connector, allows the use of all diagnostic cables. It is compatible with AXONE NEMO and PC. Thanks to Bluetooth technology, the technician can make a comfortable diagnosis without wires, even from the jetty.

Extremely powerful, they allow the mechanic to easily manage the map files. The CAN standards supported include the possibility of CAN single wire management and a further CAN controller for the diagnosis of more networks.

It allows the recording of the diagnosis session in “dynamic tests” mode, that is to say with the boat in motion, to locate specific faults that could not be verified in the mooring. The interface reconstructs a complete panorama of the situation in which the anomaly has been verified, providing important elements of analysis to identify the causes of the failure.

L’evoluzione della diagnosi, disegnato e sviluppato specificamente per l’ambiente marino.

Le caratteristiche hardware lo rendono compatibile con tutti i protocolli attualmente esistenti, il suo connettore CPC 16 poli integrato consente l’utilizzo di tutti i cavi diagnostici. E’ compatibile con AXONE NEMO e PC. Grazie alla tecnología Bluetooth il tecnico potrá realizzare una diagnosi senza cavi in mezzo, anche dal molo.

Estremamente potente, permette al meccanico una gestione facile degli archivi della mappa. Gli standard CAN supportati offrono la possibilità di gestire: CAN single wire e un altro CAN controller per eseguire le diagnosi su più reti.

Permette la registrazione di una sessione di diagnosi in modalità “prova dinamica”, ovvero con l’imbarcazione in movimiento, per constatare avarie specifiche che non si possono verificare in officina. La sua interfaccia permette di ricostruire una panoramica completa della situazione in cui l’anomalia si è verificata, fornendo gli elementi per identificare le eventuali avarie.

L’évolution du diagnostic, dessiner et développer spécialement pour l’environnement marin

Les caractéristiques du matériel le rendent compatible avec tous les protocoles existants, son connecteur CPC 16 pôles intégré permet l’utilisation de tous les câbles de diagnostic.Il est compatible avec Axone Nemo et Pc. Grâce à la technologie Bluetooth, le technicien peut effectuer un diagnostic sans fil, même depuis le quai. Extrêmement puissant, il permet au mécanicien de gérer facilement les fichiers des cartes. Les normes CAN prises en charge incluent la possibilité d’une gestion CAN à fil unique et un autre contrôleur CAN pour le diagnostic en réseaux.

Il permet l’enregistrement de la séance de diagnostic en mode «test dynamique» c’est à dire avec le bateau en mouvement pour localiser des défauts spécifiques non vérifiables en atelier. L’interface reconstruit un panorama complet de la situation dans laquelle l’anomalie a été constatée, fournissant des éléments d’analyse importants pour identifier les causes de la panne.

TEXA

APLICACIONES | APPLICATIONS | APPLICAZIONI | APPLICATIONS

Consulte la lista actualizada de aplicaciones en: | See the updated list of applications in: | Vedi l'elenco aggiornato delle applicazioni in: | Consultez la liste mise à jour des applications sur:

www.texaiberica.com/cobertura-diagnosis

MOTORES INTRABORDA / INBOARD ENGINES / MOTORI ENTROBORDO / MOTEURS IN-BORD

CATERPILLAR	3196, 3176, 3126B, 3508B, 3508C, C12, C12 Acert, C18 Acert Tier 2, C32 Acert IMO II, C32 Acert Tier 2, C32 Acert Tier 2 HP, 3512 B HD,C3512B, 3512C HD, 3512C, 3516B HD, 32 Acert Tier 2 H.P. Recreational, C32 Acert Tier 3, C7, C7 Acert, C9 Acert., 3516B, 3516C HD, 3516C, C15 Acert, C6.6 Acert
CRUSADER	5.0. 5.7. 6.0. 8.1 MPI & HO MPI
CUMMINS / MW	QSD2.0-115 / 130 / 150 / 170, QSD2.8-220, QSD4.2-270 / 320 / 350, QSB5.9 / 6.7, QSC8.3, QSK19, QSL9, QSM11 (Sistema Inyección Bosch | System injection Bosch | Sistema Iniezione Bosch | Système d'injection Bosch) Comon Rail
FIAT	C13, C78, C87, GE CURSOR 250E, 350E, 400E, N40, N60, N67, S30
FNM	HPEP, HPE 80-300 HP
HYUNDAI SEASALL	D150P/S, D170J/P/S, S220P/S, S250J/P/S, U125J/P/S
ILMOR	5.7L. 6.0L. 6.2L. MV-8
INDMAR	5.7, 6.0, 8.1, Steyr 256 Diesel
KOHLER	
LOMBARDINI Marine	LDW 194 JMT, LDW 240 JMT
MAN	D2868, V8-1000, V8-1200
MERCRUISER	350, 377, 454, 496, 496MAG, 3.0L, 4.3L, 5.0L, 5.7L, 6.2L, 7.4L, 8.1L, 8.2L, TBI, MPI, Black Scorpion, Vazer, Mandos SmartCraft, D2.8D-Tronic
MERCRUISER Diesel	VM D-Tronic, VM (no D-Tronic), MD2.0-115/130/150/170, MD2.8-270/320/350,TDI3.0-230/260, TDI4.2
MERCURY Racing Inbord	SCI, EFI, QC4V, 500EFI, 520, 525EFI, 540, 565, 575, 600, 850, Scorpion 377
MTU	MDEC C2
PCM MARINE Engines	5.0L, 5.7L, 6.0L, 8.1L
PERKINS	1106C-E6OTA 6.0L
SEA-DOO	Speedster, Challenger, Utopia, Islandia, Wake, Wake Speedster, Sportster
SISU AGCO	44 CTIM-2V, 49/66/74/84 CTIM-4V
STEYR MOTORS	MO306H43WJ, MO54NA33, MO84K32, MO94K33, MO114K33, MO126M28, MO144M38, MO156K25, MO164M40, MO166M28, MO174V40, MO196K35, MO236K42, MO256H45, MO256H43, MO286H43 SE126E25, SE156E26, SE196E35, SE236E40, SE236S36 SE266, SE286, SE306J38
VM MOTORI	2.8L, 4.2L D-Tronic, MD704, MD706, MR504LB
VOLKSWAGEN Marine	SDI, TDI
VOLVO PENTA	KAD, EDC, EGC, EVC, GXI, OSI, GI, GSI, OSXI, IPS, TAMD
YANMAR	4BY2-150 / 180, 6BY2-220 / 260 (Sistema Inyección Bosch | System injection Bosch | Sistema Iniezione Bosch | Système d'injection Bosch) 4BY3-150/180, 4JH, 6BY3-220/260, 6LY3, 8LV-320/350/370

MOTORES FUERABORDA / OUTBOARD ENGINES / MOTORI FUORIBORDO / MOTEURS HORS-BORD

EVINRUDE	(90 - 250 Ficht Ram) E-Tec 25 - 300 HP, DFi
HONDA Marine	BF 40-250 HP
JOHNSON	4 Stroke
MARINER	4 Stroke, OptiMax, Verado, DFI, EFI
MERCURY	4 Stroke, OptiMax, Verado, DFI, EFI
MERCURY Racing	OPTIMAX, DSi, VERADO 400R
PARSUN	40 EFi
SELVA Marine	4 S troke EFi
SUZUKI Marine	DF 40 -300 HP
TOHATSU	MFS, BFW, BFT
YAMAHA Marine	F, T, Z 30 - 350 HP

MOTOS DE AGUA / PWC / MOTO D'ACQUA / SCOOTER DES MERS

HONDA Marine	Aquatrax
KAWASAKI Marine	STX, Ultra.
SEA-DOO	GTI, GTX, RXP, RXT,GTR, GTS, GTX-S, Spark, Wake Pro, Wake
YAMAHA Marine	Waverunner FX, FZR, FZS, GP, VX

SIN CABLES DE INTERFACE / WITHOUT INTERFACE CABLE / SENZA CAVI INTERFACE / SANS CABLES D'INTERFACE

		CABLE WIRE CAVI CÂBLE
REC3902417	OBD, FNM Marine, VOLKSWAGEN, HYUNDAI	AM08
REC3902659	Marine FPT	AM11
REC3904277	Marine CUMMINS, MERCURISER Diesel, VM (not D-Tronic), KOHLER	AM24A
REC3905159	Marine VOLVO EGC 05/05>05/07	AM26
REC3905286	Marine MTU-MDEC	AM28
REC3905397	Marine CATERPILLAR, PERKINS	AM29
REC3906219	Marine TOHATSU	AM30
REC3906891	Marine MAN	AM31
REC3905015	Personal Water Craft KAWASAKI cable kit	


REC3902659


REC3902417


REC3904277

REC3905159


Conector redondo
Round connector
Connettore rotondo
Connecteur rond


REC3905397


REC3906219


REC3905286


REC3906891


REC3905015

INTERFACE AM01

Ref. AM01
REC3902358



		CABLE WIRE CAVI CÂBLE
REC3902407	Marine HONDA / TOHATSU, PGM (FI)	AM02
REC3902247	Marine 2 pin MERCURY, MERCRUISER	AM04
REC3902250	Marine 4 vie MERCURY, MERCRUISER	AM05
REC3902413	Marine YAMAHA / SELVA	AM06
REC3902414	Marine 6 pin VOLVO PENTA	AM07
REC3902467	Marine VOLVO KAD - TAMD	AM09
REC3902864	Marine STEYR	AM12
REC3902865	Marine EVINRUDE	AM13
REC3902907	Marine VOLVO, MERCRUISER (gasolina | fuel | benzina | essence), MEFI-4, 4B,3,2,1, CRUSADER	AM14
REC3902931	Marine YANMAR	AM15
REC3903560	Marine SUZUKI	AM22
REC3905265	Marine MERCRUISER / VM D-Tronic	AM27
REC3908405	PARSUNS	3151/ AP54



REC3902247



REC3902407



REC3902413



REC3902250



REC3902414

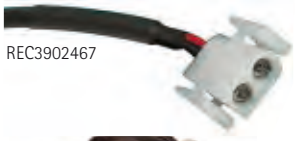

REC3902467



REC3902864



REC3902865



REC3902907



REC3903560



REC3902931



REC3905265



REC3908405

INTERFACE AM01CAN

Ref. AM01CAN
REC3903008



		CABLE WIRE CAVI CÂBLE
REC3902960	Marine VOLVO, MERCRUISER (gasolina | fuel | benzina | essence), MEFI-5 / EGC, ILMOR, CRUSADER, ILMOR, INDMAR, PCM (MEFI-5/ EGC UBD-Msocket)	AM16
REC3903502	Marine VOLVO, EGC-EV	AM18
REC3904778	Marine MERCURY, MARINER, CUMMINS 2010+, MANDOS MCM, SMARTCRAFT	AM25
REC3907103	Marine STEYR with CAN Line protocol	AM32
REC3907642	YANMAR MARINE CAN CABLE	AM33



REC3902960



REC39003502



REC39004778



REC3907103



REC3907642

KIT DIAGNOSIS Y REPROGRAMACIÓN DE LLAVE
CABLE KIT FOR DIAGNOSIS AND KEY REPROGRAMMING
KIT PER LA DIAGNOSI E RIPROGRAMMAZIONE DE CHIAVE
KIT DE DIAGNOSTIC ET REPROGRAMATION DE CLÉ

		CABLE WIRE CAVI CÂBLE
REC3906015	BRP Group	3151/AP43



PUNTAS DE DERIVACIÓN
REFERRAL POINTS
PUNTA DI DERIVAZIONE
PONTS DE DÉRIVATION

	CABLE WIRE CAVI CÂBLE
REC3904048	AM10



Puede utilizarse con interface AM01 o AM01CAN dependiendo de la marca.
It can be used with AM01 or AM01CAN interface depending on the brand.
Può essere utilizzato con l'interfaccia AM01 o AM01CAN in base alla marca.
Peut être utilisé avec l'interface AM01 ou AM01CAN selon la marque.

SOPORTES | STANDS | SUPPORTI | SUPPORTS

SOPORTES DESCARGA DE EMBARCACIONES

RECH10
Para cargar o descargar embarcaiones de los remolques o cuna.
Los remolques pueden entrar y salir de entre los gatos hidráulicos libremente, facilitando su tarea.
Levantan embarcaciones de hasta 18 toneladas.
Su recorrido de elevación es de 51 cm.
Equipado con válvula de bloqueo que permite mantener el barco indefinidamente en la posición deseada.
Puede actuar sobre tierra, grava, asfalto o cemento, tanto en la tienda, como en el varadero o exposición.

BOAT HANDLING JACKS & STANDS

RECH10
Work station for bottom repair & cleaning. Trailer rolls in out past jacks, allowing you to take boats on or off trailers easily.
Jacks have an auto lock allowing boats to be left on indefinitely.
Can be used on dirt, gravel, black top or cement.
Can be used anywhere! Shop, yard, showroom.
Lifts boats up to 40,000 lbs.

SUPPORTI SCARICO IMBARCAZIONI

RECH10
Per caricare o scaricare imbarcazioni da rimorchi o sostegni.
I rimorchi possono entrare e uscire tra i crik idraulici liberamente, facilitando il compito.
Solleva imbarcazioni fino a 18 tonnellate.
Escursione max di 51 cm.
Fornito di valvola di blocco che permette di mantenere la barca nella posizione desiderata per diverso tempi.
Può essere usato su terra, ghiaia, asfalto o cemento, come in negozio o in esposizione.

SUPPORTS DE DÉCHARGE DE BATEAU

RECH10
Pour charger ou décharger des bateaux de remorques ou de berceaux.
Les remorques peuvent entrer et sortir librement entre les vérins hydrauliques, ce qui facilite leur tâche.
Ils lèvent des navires jusqu'à 18 tonnes.
Sa course d'élévation est de 51 cm.
Equipé d'une valve de blocage qui permet au navire d'être maintenu indéfiniment dans la position souhaitée.
Il peut agir sur terre, gravier, asphalte ou ciment, aussi bien en magasin qu'en hangar à bateaux ou en exposition.

REF		INCLUYE	INCLUDED	INCLOSO	COMPREND	
RECH10		Soportes hidráulicos	Jacks	Supporti idraulici	Supports hydrauliques	x 4
	REC12	Soportes	Straight arms	Supporti	Supports	x 4
	REC15	Soportes inclinados 25 cm	10" drop arms	Supporti inclinati 25 cm	Supports inclinés de 25 cm	x 4
	REC20	Soportes asiento barco	4" x 18" contact pads	Supporti appoggi barche	Supports de siège de bateau	x 4
RECH10-1/4		Soporte hidráulico	Jack	Supporto idraulico	Support hydraulique	1
	REC12	Soporte	Straight arm	Supporto	Support	1
	REC15	Soporte inclinados 25 cm	10" drop arms	Supporto inclinato 25 cm	Support incliné de 25 cm	1
	REC20	Soporte asiento barco	4" x 18" contact pad	Supporto appoggio barche	Support de siège de bateau	1



RECmar®



REF					KG	
REC12	Soporte plano std.	Straigh support standard	Braccia piatto standard	Support plat standard		83,8 - 132 cm
	1ª posición	1st pin hole	1ª posizione	1ère position	900 kg	
	2ª posición	2nd pin hole	2ª posizione	2ème position	1.800 kg	
	3ª posición	3rd pin hole	3ª posizione	3ème position	3.600 kg	
	4ª posición	4th pin hole	4ª posizione	4ème position	4.500 kg	
REC15	Soporte inclinado	Drop arm	Braccia	Support incliné		28 cm =10"
REC16	Soporte inclinado	Drop arm	Braccia	Support incliné		51 cm = 20"
REC17	Suplemento	Single riser extension	Suplementi	Supplement		12,5 cm = 5"
REC18	Suplemento	Single riser extension	Suplementi	Supplement		25 cm = 10"
REC19	Soporte con goma	Large pad	Braccia contatto	Support	6.800 kg +	76 cm = 30"
REC20	Soporte con goma	Large pad	Braccia contatto	Support	- 6.800 kg	45.7 cm =18"

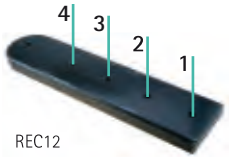

REC12


REC15
REC16


REC17
REC18


REC19
REC20

RECAMBIOS | SPARES | RICAMBIO | REMPLACEMENT

REF	RECmar®			
RECNSCYL	Pistón	Piston	Pistone	Vérin

REF	YARDARM			
YARSLKTN	Kit reparación	Repair kit	Kit riparazione	Kit de réparation
YARJAT	Rueda	Wheel	Ruota	Roue
YARNSTVALVE	Llave de recambio	Spare T key	Chiave di ricambio	Clé de rechange


YARSLKTN


RECNSCYL


YARJAT


YARNSTVALVE

RECAMBIOS MARINOS

SOPORTES PARA EMBARCACIONES — BOAT STANDS — SUPPORTI PER IMBARCAZIONI — BERS ROULANT POUR BATEAU

RECmar

REF	KG
RECED36	1.500 kg



REF
RECED36C



SOPORTES PARA COLAS — STANDS FOR STERN DRIVES — SUPPORTI PER PIEDI — SUPPORTS D'EMBASES

RECJO6HD
Carro con gato hidráulico para la instalación de todo tipo de colas.
Permite desmontar o montar colas, una sola persona.
Especialmente útil en embarcaciones con plataforma integrada.
Construido con brazos extra largos de sujección y base con 4 ruedas neumáticas.
Gran capacidad de elevación para colas de peso extra.
También en colas de doble hélice.
Varias regulaciones.

RECJO6HD
Stern drive installer.
Works in all makes and models.
Allows one man to remove and install stern drives.
Especially helpful on boats with integrated swim platforms.
Built with extra long clamping arms and wheel base, plus heavyduty lifting capacity for those extra heavy drives.
Also works great on dual prop drives.
Unique low cost shop tool.
4 air tires allow for rugged yard use.

RECJO6HD
Carro con crik idraulico per l'installazione di tutti i tipi di piedi.
Permette ad una persona di smontare o montare i piedi da solo.
Specialmente utile nelle imbarcazioni con piattaforma integrata.
Costruito con larghi bracci di fissaggio e una base con 4 ruote pneumatiche.
Grande capacità di sollevamento per piedi con peso extra.
Anche per piedi con doppia elica.
Varie regolazioni.

RECJO6HD
Chariot avec vérin hydraulique pour l'installation de tous types d'embase.
Il permet à une seule personne de démonter ou de monter des pieds.
Particulièrement utile dans les bateaux avec plate-forme intégrée.
Construit avec des bras de support extra longs et une base avec 4 roues pneumatiques.
Grande capacité de levage pour des embases de poids important.
Également en arbre double hélice.

REF
RECJO6HD

RECmar



RECAMBIOS — SPARES — RICAMBIO — REMPLACEMENT

REF				
RECKOCYL	Pistón	Piston	Pistone	Vérin
RECKRW	Rueda completa	Hydraulic jack RE-Wheel	Ruota completa	Roue complète
RECKFW	Rueda hidráulica	Hydraulic jack FT-Wheel	Ruota idraulica	Roue
RECJO10	Suplemento 25 cm	Suplement 10"	Supplemento 25 cm	Supplément de 25 cm
RECHANDLEJO6HD	Maneta	Handle	Maniglia	Poignée
RECSPRINGJO6HD	Muelle	Spring	Molla	Ressort



RECKOCYL



RECJO10



RECKRW RECKFW



RECHANDLEJO6HD

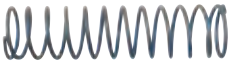

RECSPRINGJO6HD

RECAMBIOS MARINOS

YARSR5
Soporte para 5 colas.
Mantiene el taller limpio y organizado.
Protege las colas de golpes y daños.

YARSR5
Holds 5 stern drives.
Keeps shop looking neat and clean.
Protects drives from being cratched and damaged.

YARSR5
Supporto per 5 piedi.
Mantiene l'officina pulita e organizzata.
Protegge i piedi dai colpi e dai danni.

YARSR5
Prise en charge de 5 embases.
Maintient l'atelier propre et organisé.
Protège les pieds d'embase des chocs et des dommages.

REF
YARSR5

YARDARM

REF
YARSRC





RECWS3
Soporte trabajo reparación todo tipo de colas.

RECWS3
Work station.
Holds all kind of drives.

RECWS3
Supporto lavoro per riparare tutti i tipi di piedi.

RECWS3
Support pour les travaux de réparation de tous types d'embase.

REF
RECWS3

RECmar®



SOPORTES PARA MOTORES

Soporte de trabajo giratorio 360º con ruedas. Para todo tipo de motores; GM, FORD, VOLVO.
Ideal para reparaciones completas.

STANDS FOR ENGINES

Allow engine to be rotated 36 0º.
Adjustable mounting plate will accommodate all engine types.

SUPPORTI PER MOTORI

Carrello supporto motore, permette il movimento per 360º utile per lavorazioni in coppa.
Fornito di ruote piene, può montare tutti i blocchi GM, FORD, VOLVO.

SUPPORTS MOTEUR

Support de travail rotatif à 360 ° avec roues. Pour tous types de moteurs; GM, FORD, VOLVO.

REF
RECTOOL1

RECmar®





YARES2
Soporte trabajo giratorio 360º con ruedas. Para todo tipo de motores: GM, FORD, VOLVO.
Ideal para reparaciones completas.
Se le pueden adaptar los soportes referencias YARCHA para GM y YARFHA para FORD y probar motores en funcionamiento.

YARES2
360º rotating work support with wheels. For all types of engines: GM, FORD, VOLVO.
Ideal for complete repairs. You can adapt the YARCHA reference supports for GM and YARFHA for FORD and test running engines.

YARES2
Supporto lavoro girevole 360º con ruote.
Per tutti i tipi di motori: GM, FORD, VOLVO.
Ideale per riparazioni complete.
Si possono adattare i supporti di riferimento YARCHA per GM e YARFHA per FORD e provare i motori in funzione.

YARES2
Support de travail rotatif à 360 ° avec roues. Pour tous types de moteurs : GM, FORD, VOLVO.
Idéal pour des réparations complètes.
Vous pouvez adapter les supports de référence YARCHA pour GM et YARFHA pour FORD et tester les moteurs en cours d'exécution.

REF	
YARES2	GM, FORD, VOLVO
YARFHA	Kit FORD
YARCHA	Kit GM

YARDARM





YARFHA YARCHA



CARROS PORTAMOTOR / OUTBOARD MOTOR CARRIER / CARRELLO PORTA MOTORE / CHARIOT MOTEUR

Soporte portamotor con ruedas, para fueraborda. Con soporte para depósito de combustible y sandow de fijación.
Fabricado en acero zincado y tablero marino de 43 cm.
Diámetro ruedas: 15 cm

Manufactured in galvanized steel pipe and wooden board 43 cm. With tank holder and fixing strap.
Diameter wheels: 15 cm.

Supporto porta motore con ruote, per fuoribordo. Con supporto per serbatoio carbutante. In acciaio zincato e bordo marino da 43 cm.
Diametro ruote: 15 cm

Chariot-moteur avec roues, pour hors-bord. Avec support pour réservoir de carburant et fixation sandow.
Fabriqué en acier galvanisé et planche marine de 43 cm.
Diamètre de roue: 15 cm



Ref	KG	KG	
GS73122	12 kg	50 kg	90 cm

GOLDENSHIP

Soporte portamotor con ruedas, para fueraborda. Con soporte para depósito de combustible y sandow de fijación.
Fabricado en acero zincado y tablero marino de 45 cm.
Diámetro ruedas: 36 cm

Manufactured in galvanized steel pipe and wooden board 45 cm. With tank holder and fixing strap.
Diameter wheels: 36 cm.

Supporto porta motore con ruote, per fuoribordo. Con supporto per serbatoio carbutante. In acciaio zincato e bordo marino da 45 cm.
Diametro ruote: 36 cm

Chariot-moteur avec roues, pour hors-bord. Avec support pour réservoir de carburant et fixation sandow.
Fabriqué en acier galvanisé et panneau marin de 45 cm.
Diamètre de roue: 36 cm



Ref	KG	KG	
GS73119	12 kg	80 kg	95 cm

GOLDENSHIP

SOPORTE EXPOSITOR / OUTBOARD STAND / SUPPORTO ESPOSITORE / PRÉSENTOIR

Soporte portamotor con ruedas, para fueraborda. Plegable. Fabricado en acero zincado y tablero marino de 43 cm.

Folding display for outboards. Manufactured in galvanized steel pipe and wooden board of 43 cm.

Supporto per motori fuoribordo. Pieghevole. In acciaio zincato e bordo marino da 43 cm.

Chariot-moteur sans roues, pour hors-bord. Pliable.
Fabriqué en acier galvanisé et planche marine de 43 cm.



Ref	KG	KG	
GS73120	6 kg	40 kg	90 cm

GOLDENSHIP

RECAMBIOS MARINOS

DIRECCIÓN MECÁNICA | STEERING SYSTEM | TIMONERIA MECCANICA | DIRECTION MÉCANIQUE

CAJA DE DIRECCIÓN AJUSTABLE ZTS

Con mecanismo antiretorno.
Elimina el «feedback» de la hélice.
Nº vueltas babor-estribor: 3,8.
Para utilizar con cables **3000 SS.**
Reemplaza **Teleflex-Morse® NFB Safe-T II, NFB 4.2, T73BRFC**

ZTS ROTARY SINGLE HELM

Zero torque steering rotary helm.
Eliminates prop feedback load.
Precise response of 3.8 turns lock-to-lock.
For use with the steering cables **3000 SS.**
Replaces **Teleflex-Morse® NFB Safe-T II, NFB 4.2, T73BRFC**

TIMONERIA ZTS

Timoneria con meccanismo anti-ritorno.
Elimina il feedback delle eliche.
N° giri destra e sinistra: 3,8.
Da utilizzare con cavi: **3000 SS.**
Rimpiazza **TeleflexMorse®NFB Safe-T II, NFB 4.2, T73BRFC**

BOÎTIER DE DIRECTION ZTS

Avec mécanisme anti-retour.
Élimine le "retour" de l'hélice.
Nombre de tours bâbord-tribord: 3.8.
Utilisation avec les câbles **3000 SS.**
Remplace **Teleflex-Morse® NFB Safe-T II, NFB 4.2, T73BRFC**

REF				
PRE500010	Caja de dirección	Helm	Timoneria	Boitier de direction
PRE500012	Ménsula de montaje 90º	Bezel kit 90º	Coprimozzo 90°	Support incliné 90º
PRE500014	Ménsula de montaje 20º	Bezel kit 20º	Coprimozzo 20°	Support incliné 20º

PRETECH Cable and Controls



PRE500012



PRE500014



PRE500010

Caja de dirección con sistema de ángulo ajustable hasta 40º.
Se acomoda la postura de conducción más idónea para el piloto.

Tilt rotary steering system to use with the steering cables 3000 SS.
With full 40 degree range of motion.

Timoneria con sistema di angolo fino a 40°.
Si può impostare la posizione più idonea di guida per il pilota.

Boîtier de direction avec système d'angle réglable jusqu'à 40º.
Permet d'obtenir la position de conduite la plus appropriée pour le pilote.

REF	
PRE500007	ZTS
PRE370987	3000

PRETECH Cable and Controls



PRE500007

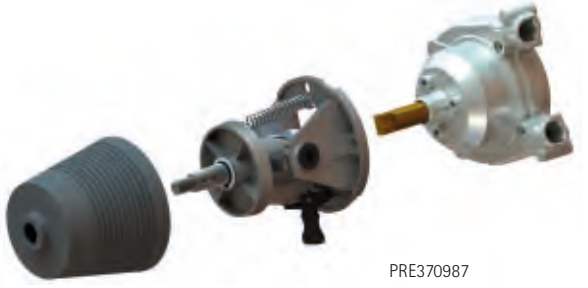

PRE370987

KIT LT

Compuesto por 1 caja operadora, 1 cable de dirección según las medidas indicadas y un bisel de montaje de 90º.
Radio mínimo curvatura del cable 360º.
Carrera del cable 230 mm con 2,5 vueltas de volante

KIT LT

Rotary steering system: Helm, Steering cable and 90º bezel.
2,5 turns lock to lock. Travel 230 mm.

KIT LT

Composto da una timoneria, 1 cavo timoneria secondo le dimensioni indicate e una piastra da 90°.
Raggio minimo curvatura del cavo 360°.
Corsa cavo 230mm con 2,5 giri del volante.

KIT LT

Composé d'un boîtier de commande, d'un câble de direction selon les mesures indiquées et d'un support incliné à 90º.
Course du câble 230 mm avec 2,5 tours de volant

REF			
PRE208005	5'/ 1,50 m	5,5 m	55 hp
PRE208006	6'/ 1,80 m		
PRE208007	7'/ 2,10 m		
PRE208008	8'/ 2,45 m		
PRE208009	9'/ 2,75 m		
PRE208010	10'/ 3,05 m		

REF			
PRE208011	11'/ 3,35 m	5,5 m	55 hp
PRE208012	12'/ 3,65 m		
PRE208013	13'/ 3,95 m		
PRE208014	14'/ 4,25 m		
PRE208015	15'/ 4,60 m		
PRE208016	16'/ 4,90 m		

PRETECH Cable and Controls steerflex



KIT 3000 SS

Compuesto por 1 caja operadora, 1 cable de dirección fabricado en acero inox según medidas indicadas y un bisel de montaje de 90º.
Para embarcaciones con un esfuerzo máximo de 140 kg en el punto de unión.
Puede montarse en cualquier posición con movimientos de 90º.
Radio mínimo curvatura del cable 200 mm. Carrera del cable 230 mm con 3,6 vueltas de volante
Reemplaza Teleflex-Morse® Safe-T QC, Safe-T, Uflex T71FC

REF		
PRE315008	8' / 2,45 m	8 m
PRE315009	9' / 2,75 m	
PRE315010	10' / 3,05 m	
PRE315011	11' / 3,35 m	
PRE315012	12' / 3,65 m	
PRE315013	13' / 3,95 m	
PRE315014	14' / 4,25 m	

KIT 3000 SS

Rotary steering system: Helm, Stainless Steel Cable and 90º Bezel.
Stainless steel inner cable with spring stainless steel enclosure coil.
Maximun working load: 300 lb at the tiller arm.
Three turns lock to lock. Travel 230 mm.
Replaces Teleflex-Morse® Safe-T QC, Safe-T, Uflex T71FC

REF		
PRE315015	15' / 4,60 m	8 m
PRE315016	16' / 4,90 m	
PRE315017	17' / 5,20 m	
PRE315018	18' / 5,50 m	
PRE315019	19' / 5,80 m	
PRE315020	20' / 6,10 m	

KIT 3000 SS

Composto da una timoneria, 1 cavo timoneria in acciaio inox, secondo le misure richieste e una piastra di montaggio di 90°.
Per imbarcazioni con uno sforzo massimo di 140kg nel punto di unione.
Si può montare in qualunque posizione con un movimento di 90°. Raggio minimo curvatura 200mm.
Corsa del cavo 230mm con 3,6 giri del volante.
Rimpiazza **Teleflex-Morse® Safe-T QC, Safe-T, Uflex T71FC**

KIT 3000 SS

Composé de 1 boîtier de commande, 1 câble de direction en acier inoxydable selon les mesures indiquées et un support incliné à 90º.
Pour les bateaux avec un effort maximum de 140 kg au point de jonction.
Course du câbles 230 mm avec 3,6 tours de volant
Remplace **Teleflex-Morse® Safe-T QC, Safe-T, Uflex T71FC**



PRETECH Cable and Controls
steerflex

CABLES DE DIRECCIÓN LT

REF	
PRE250005	5'/ 1,50 m
PRE250006	6'/ 1,80 m
PRE250007	7'/ 2,10 m
PRE250008	8'/ 2,45 m
PRE250009	9'/ 2,75 m
PRE250010	10'/ 3,05 m

LT STEERING CABLE

REF	
PRE250011	11'/ 3,35 m
PRE250012	12'/ 3,65 m
PRE250013	13'/ 3,95 m
PRE250014	14'/ 4,25 m
PRE250015	15'/ 4,60 m
PRE250016	16'/ 4,90 m

CAVO DI TIMONERIA LT

CÂBLES DE DIRECTION LT



PRETECH Cable and Controls
steerflex

CABLES DE DIRECCIÓN 3000 SS DE ACERO INOX

REF	
PRE550008	8'/ 2,45 m
PRE550009	9'/ 2,75 m
PRE550010	10'/ 3,05 m
PRE550011	11'/ 3,35 m
PRE550012	12'/ 3,65 m
PRE550013	13'/ 3,95 m
PRE550014	14'/ 4,25 m
PRE550015	15'/ 4,60 m
PRE550016	16'/ 4,90 m
PRE550017	17' / 5,20 m

STEERING CABLE 3000 SS STAINLESS STEEL

REF	
PRE550018	18' / 5,50 m
PRE550019	19' / 5,80 m
PRE550020	20' / 6,10 m
PRE550021	21' / 6,40 m
PRE550022	22' / 6,70 m
PRE550023	23' / 7,00 m
PRE550024	24' / 7,30 m
PRE550025	25' / 7,60 m
PRE550026	26' / 7,90 m

CAVO TIMONERIA 3000 SS ACCIAIO INOX

CÂBLES DE DIRECTION 3000 SS ACIER INOXYDABLE



PRETECH Cable and Controls
steerflex

CABLES DE DIRECCIÓN MEGA-UR

Reemplaza | Replace | Rimpiazzano | Remplace:
Ultraflex T71FC, T72FC, T73NR FC, T81FC, T82FC, T83NR FC.
Teleflex Safe-T QC, NFB 4.2, NFB Safe-T II

REF	
PRE509007	7'/ 2,14 m
PRE509008	8'/ 2,45 m
PRE509009	9'/ 2,75 m
PRE509010	10'/ 3,05 m
PRE509011	11'/ 3,35 m
PRE509012	12'/ 3,65 m
PRE509013	13'/ 3,95 m

MEGA-UR STEERING CABLE

REF	
PRE509014	14'/ 4,25 m
PRE509015	15'/ 4,60 m
PRE509016	16'/ 4,90 m
PRE509017	17' / 5,20 m
PRE509018	18' / 5,50 m
PRE509019	19' / 5,80 m
PRE509020	20' / 6,10 m

CAVO TIMONERIA MEGA-UR

CÂBLES DE DIRECTION MEGA-UR



PRETECH Cable and Controls
steerflex

RECAMBIOS MARINOS

ACCESORIOS DIRECCIÓN MECÁNICA | ACCESSORIES FOR STEERING SYSTEM | ACCESSORI PER TIMONERIA MECCANICA | ACCESSOIRES POUR DIRECTION MÉCANIQUE

REF					
PRE370618	Cardan de unión del cable de dirección al motor.	Swivel joint for steering cables.	Per unire cavi timoneria al motore.	Union cardan du câble de direction au moteur.	1
PRE370046	Soporte para cable de dirección. Para montaje en el espejo de popa	Bracket kit for inboard transom steering mount.	Supporto per cavi timoneria. Per il montaggio nello specchio di poppa.	Support pour câble de direction. Pour montage sur le tableau AR	1
PRE370613	Soporte para cable de dirección. Para montaje estanco en los laterales de la embarcación. Regulable.	Bracket kit for inboard side splashwell steering mount.	Suppporto per cavi timoneria. Montaggio della flangia ai lati dell'imbarcazione. Regolabile.	Support pour câble de direction. Pour un montage étanche sur les côtés du bateau. Réglable.	1
PRE370619	Rótula para unión rápida del cable de dirección al motor.	Ball joint for steering cables.	Giunto per unire i cavi timoneria al motore.	Rotule pour une connexion rapide du câble de direction au moteur.	1
PRE370621	Barra de reenvío para conexión de los cables de dirección. Fabricada en acero inox. Reforzada.	Link arm for outboards steerings.	Barra di direzione per collegare i cavi. In acciaio inox. Rinforzata.	Barre de renvoie pour connecter les câbles de direction. Fabriqué en acier inoxydable. Renforcé	1


PRE370618


PRE370046


PRE370613


PRE370619


PRE370621

DIRECCIÓN HIDRÁULICA | HYDRAULICS STEERING SYSTEM | TIMONERIA IDRAULICA | DIRECTION HYDRAULIQUE

FUERABORDAS 150 HP | OUTBOARDS 150 HP | FUORIBORDO 150 HP | HORS-BORD 150 HP

Bomba de aluminio, con válvula antiretorno incorporada. Cilindro de aluminio y acero inox. con purgadores. Se suministra completa con racors, tubo flexible de rilsan y 2L de aceite hidráulico

Helm pump made in aluminum, with non-return valve incorporated. Cylinder in aluminum and stainless steel, with breather valves. Completed with racors, rilsan tubing and 2L hydraulic oil.

Corpo pompa in alluminio, con valvola anti-ritorno incorporata. Cilindro in alluminio e acciaio inox, con spurgo. Si vende completa di raccordi, tubo flessibile e 2 l di olio idraulico.

Pompe en aluminium, avec clapet anti-retour intégré. Vérin en aluminium et acier inoxydable. Livré complet avec raccords, tube flexible et 2L d'huile hydraulique

				TX4200K 150 HP	TX6400K 300 HP
Modelo bomba	Pump model	Modello pompa	Modèle de pompe	BayStar	SeaStar
Capacidad bomba	helm volume	Cap. Pompa	Capacité de la pompe	23 cm^3	27,8 cm^3
Modelo cilindro	Cylinder model	Mod. Cilindro	Modèle de vérin	HC4645H	HC5345H
Capacidad cilindro	Cylinder volume	Cap. Cilindro	Cylindrée	105 cm^3	139 cm^3
Carrera del pistón	Cylinder travel	Corsa pistone	Course du vérin	206 mm	206 mm
Nº vueltas babor-estribor	Turns lock to lock	N° giri a destra e sinistra	No. tourne bâbord-tribord	5	5
Manguera con racors	Hose with racors	Tubo con raccordo	Tuyau avec raccords	2 x 6 m	2 x 7 m
Velocidad máxima	Max. speed	Velocità max	Vitesse maximale	50 kn	65 kn

BayStar
TX4200K



SeaStar
TX6400K



TUBOS HIDRÁULICOS PARA TX6400K

2 Tubos con racors montados

HYDRAULIC HOSES FOR TX6400K

Pair of hydraulic hoses with racors

TUBI IDRAULICI PER TX6400K

2 tubi con raccordi montati

TUYAUX HYDRAULIQUES POUR TX6400K

2 tuyaux avec raccords montés

REF		
TXMP5126	26' / 8 m	2

SeaStar



KITS

Bomba de aluminio, con válvula antiretorno y sobrepresión. Cilindro de aluminio y acero inoxidable, con purgadores. Se suministra completa con racors de latón cromado, tubo flexible de rilsan y aceite hidráulico.

KIT

Helm pump made in aluminum, with a non-return and pressure relief valves. Cylinder in aluminum and stainless steel, with breather valves. Completed with racors, rilsan tubing and hydraulic oil.

KITS

Corpo pompa in alluminio con valvola anti-ritorno e sovrapressione. Cilindro in alluminio e acciaio inox, con spurgo. Si vende completa di raccordi in ottone cromato, tubo flessibile e olio idraulico.

KITS

Pompe en aluminium, avec soupape de refoulement et de surpression. Vérin en aluminium et acier inoxydable. Livré complet avec raccords en laiton chromé, tuyau flexible et huile hydraulique.

				GS41062 80 hp	GS41065 150 hp	GS41066 300 hp	GS41059 350 hp
Modelo bomba	Pump model	Modello pompa	Modèle de pompe	GM3-MRA	GM0-MRA	GM2-MRA01	GM2-MRA01
Capacidad bomba	helm volume	Cap. Pompa	Capacité de la pompe	14 cm^3	17 cm^3	27 cm^3	27 cm^3
Modelo cilindro	Cylinder model	Mod. Cilindro	Modèle de vérin	MC90B	MC150BR	MC300A	MC350A
Capacidad cilindro	Cylinder volume	Cap. Cilindro	Cylindrée	75 cm^3	83 cm^3	130 cm^3	140 cm^3
Carrera del pistón	Cylinder travel	Corsa pistone	Course du vérin	206 mm	200 mm	198 mm	198 mm
Nº vueltas babor-estribor	Turns lock to lock	N° giri destra e sinistra	No. tours bâbord-tribord	5,2	4,9	4,9	5,2
Manguera con racors	Hose with racors	Tubo con raccordo	Tuyau avec raccords	2 x 5 m	2 x 6 m	2 x 7 m	2 x 7,5 m
Ø Tubo	Tube Ø	Ø Tubo	Ø Tuyau	6,3 mm = 1/4"	6,3 mm = 1/4"	7,94 mm = 5/16"	7,94 mm = 5/16"

MAVI MARE

GS41062



GS41065



GS41066



GS41059



KITS DIRECCIÓN HIDRÁULICA PARA COLAS

Bomba de aluminio estampado en caliente.
Eje de acero inox AISI 316.
Rotor a 7 pistones fabricado en acero.
Cilindro de aluminio y acero inox.
Se suministra completa con racors, 2 x 7,5 m tubo flexible de rilsan y 2 L de aceite hidráulico.

HYDRAULIC STEERING FOR STERN-DRIVE KITS

Helm pump made in aluminum with hot pressing processing (not casting).
Shaft made of stainless steel AISI 316.
7 pistons rotor made in steel.
Cylinder in aluminum and stainless steel, with breather valves.
Completed with racors, rilsan tubing and 2 L hydraulic oil.

KIT TIMONERIA IDRAULICA PER PIEDI

Corpo pompa in alluminio con stampaggio a fusione.
Asse in acciaio inox AISI316.
Cilindro a 7 pistoni fabbricato in acciaio.
Cilindro in alluminio e acciaio inox.
Si vende completo di raccordi, 2x7,5 m di tubo flessibile e 2 l di olio idraulico.

DIRECTION HYDRAULIQUE POUR EMBASE

Pompe en aluminium estampé à chaud.
Arbre en acier inoxydable AISI 316.
Rotor à 7 pistons en acier.
Vérin en aluminium et acier inoxydable.
Livré complet avec raccords, 2 tuyaux flexibles de 7,5 m et 2 litres d'huile hydraulique.

SERVO-ASISTIDA	POWER ASSISTED	SERVOASSISTITO	ASSISTÉE	GS41053
Denominación	Model	Modello	Dénomination	GF150ET
Modelo bomba	Pump model	Modello pompa	Modèle de pompe	GM2-MRA01
Capacidad bomba	helm volume	Cap. pompa	Capacité de la pompe	27 cm^3
Modelo cilindro	Cylinder model	Mod. cilindro	Modèle de vérin	MC150
Capacidad cilindro	Cylinder volume	Cap. pompa	Cylindrée	88cm^3
Carrera del pistón	Cylinder travel	Corsa pistone	Course du vérin	200 mm
Peso bomba	Helm weight	Peso pompa	Poids de la pompe	3 kg
Nº vueltas babor-estribor	Turns lock to lock	N° giri destra e sinistra	No. tours bâbord-tribord	3,4
Ø Tubo	Tube Ø	Ø Tubo	Ø Tuyau	7,94 mm / 5/16"
Longitud tubo	Tube length	Lungh. tubo	Longueur tuyau	2 x 7,5 m



SIN SERVO	NON POWER ASSISTED	SERVOASSISTITO	ASSISTÉE	GS41054
Denominación	Model	Modello	Dénomination	GF300BET
Modelo bomba	Pump model	Modello pompa	Modèle de pompe	GM2-MRA03
Capacidad bomba	helm volume	Cap. pompa	Capacité de la pompe	32 cm^3
Modelo cilindro	Cylinder model	Mod. cilindro	Modèle de vérin	MC300BET
Capacidad cilindro	Cylinder volume	Cap. cilindro	Cylindrée	146 cm^3
Carrera del pistón	Cylinder travel	Corsa pistone	Course du vérin	200 mm
Peso bomba	Helm weight	Peso pompa	Poids de la pompe	3,7 kg
Nº vueltas babor-estribor	Turns lock to lock	N° giri destra e sinistra	No. tours bâbord-tribord	4,6
Ø Tubo	Tube Ø	Ø Tubo	Ø Tuyau	7,94 mm / 5/16"
Longitud tubo	Tube length	Lungh. tubo	Longueur tuyau	2 x 7,5 m



ACCESORIOS DIRECCIÓN HIDRÁULICA

ACCESSORIES FOR HYDRAULIC STEERING SYSTEM

ACCESSORI PER TIMONERIA IDRAULICA

ACCESSOIRES POUR DIRECTION HYDRAULIQUE

REF	R.O. OEM					(mm)
GS41080		Barra de dirección para conexión de los cables de dirección. Acero inox.	Link arm for outboards steerings. Stainless steel.	Barra di rinvio per la connessione dei cavi timoneria. Fabbricata in accaio inox.	Barre de renvoie pour connecter les câbles de direction. Acier inoxidable.	320 - 340
GS41082		Barra de dirección con conexión rápida para conexión de los cables de dirección. Acero inox.	Link arm quick connection for outboards steerings. Stainless steel.	Barra di rinvio con connessione rapida per la connessione dei cavi timoneria. Fabbricata in accaio inox.	Barre de renvoie avec connexion rapide pour connecter les câbles de direction. Acier inoxidable.	330 - 370
GS41083		Barra de unión para el acople de dos motores	Universal tie bar for two engines	Barra di unione per accoppiamento di due motori.	Barre d'accouplement pour deux moteurs	850
GS41084	6E5-61301-01 6E5-61301-00	Barra de unión con conexión a rótula pPara el acople de dos motores fueraborda hasta 300 hp. Acero inox. Aisi 316.	Universal tie bar with spherical joint for two engines up to 300 hp. Made in stainless steel.	Barra di unione con snofo sferico per due motori fuoribordo fino a 300hp. In acciaio inox aisi316	Kit barre d'accouplement à rotule pour deux moteurs hors-bord jusqu'à 300 ch. Acier inoxidable. Aisi 316.	640 - 780



GS41080

GOLDENSHIP



GS41082

GOLDENSHIP



GS41083

MAVI MARE



GS41084

GOLDENSHIP

BOMBA

PUMP

POMPA

POMPE

REF	R.O. OEM
GS41070	GM3-MRA
GS41071	GM0-MRA
GS41072	GM2-MRA01
GS41073	GM2-MRA03



MAVI MARE

RECAMBIOS MARINOS

CILINDRO — CYLINDER — CILINDRO — VERIN

REF	R.O. OEM
GS41077	MC350HD
GS41060	MC90B
GS41063	MC150BR
GS41089	MC300A



CONECTORES — CONNECTORS — PIASTRA CONNESSIONE — CONNECTEURS

REF		
GS41067	Honda 115-130	1
GS41068	Yamaha 40-50-60-70 HP Honda 115-130 HP	1
GS41069	Mercury Optimax 115 Mercury 150 EFI	1



GS41067

GS41069



GS41068

ACEITE PARA DIRECCIÓN HIDRÁULICA — OIL FOR HYDRAULIC STEERING SYSTEM — OLIO PER TIMONERIA IDRAULICA — HUILE POUR DIRECTION HYDRAULIQUE

REF	
GS41074	1 L



MANDOS UNIVERSALES Y ACCESORIOS — UNIVERSAL CONTROLS AND ACCESSORIES — CONTROLLI UNIVERSALI E ACCESSORI — COMMANDES UNIVERSELLES ET ACCESSOIRES

MANDO ELECTRÓNICO

Reemplaza y mejora el funcionamiento de los mandos mecánicos tradicionales, permitiendo un control más preciso y suave de las maniobras.
Se suministran en kits completos con todos los componentes para sustituir de modo sencillo los mandos tradicionales, listos para instalar y operar.
Sistema de conexión CANbus.
Alimentación estandard 12V (24V Bajo demanda).

- Hasta 6 puestos de control.
- Sincronización de r.p.m. en ambos motores.
- Posibilidad de aumentar y reducir las revoluciones del motor mediante ligeras pulsaciones de los botones de control.
- Puede incorporar mandos de control remoto mediante conexión «CANbus».
- Memoria de diagnósticos de avisos y alarmas.

ELECTRONIC CONTROL

Easily upgrade the traditional boat mechanical controls.
Gives finger tip, precise control of your engines shift and throttle functions.
Supplied in complete kits with all components required and ready to install.
Latest CANbus technology for easy installation and set up.
12V Standard power (24V on demand).

- Can be connected up to 6 control heads.
- Auto synchronization r.p.m.
- Possibility of throttle in «BUMP» mode.
- Can incorporate Handheld Remote Controls.
- Memory of diagostics checks of warning and alarms.

SCATOLA DI COMANDO

Sostituisce e migliora la scatola di comando tradizionale, permettendo un controllo più preciso delle manovre.
Si vende in kit completo con tutti i componenti richiesti per sostituire in modo semplice la scatola di comando tradizionale.
Tecnologia CANbus, Alimentazione standard **12V** (24V on demand).

- Fino a 6 postazioni di controllo
- Auto sincronizzazione r.p.m.
- Possibilità di diminuire e aumentare i giri del motore, tramite un pulsante di controllo.
- Si può incorporare comandi di controllo remoto tramite la connessione CANbus
- Memoria diagnostica di avviso e allarme.

COMMANDE ÉLECTRONIQUE

Elle remplace et améliore le fonctionnement des commandes mécaniques traditionnelles, permettant un contrôle plus précis et plus fluide des manœuvres.
Ils sont fournis en kits complets avec tous les composants pour remplacer facilement les commandes traditionnelles, prêts à installer et à utiliser.
Système de connexion CANbus.
Alimentation standard 12V (24V sur demande).

- Jusqu'à 6 points de contrôle peuvent être connectés.
- Synchronisation de r.p.m. dans les deux moteurs.
- Possibilité d'augmenter et de réduire les tours du moteur en appuyant légèrement sur les boutons de commande.
- Vous pouvez intégrer des commandes de télécommande via une connexion «CANbus».
- Mémoire de diagnostic des avertissements et alarmes.



KITS	KITS	KIT	KITS	
1 MOTOR INTERIOR 1 ESTACIÓN	**1 INBOARD ENGINE 1 STATION**	**1 MOTORE ENTROBORDO 1 STAZIONE**	**1 MOTEUR IN-BORD 1 STATION**	**GLE1M1EI**
Actuador SA2	Actuator SA2	1 attuatore SA2	Actionneur SA2	1
Mando 1 palanca - 2 pulsadores	Single Control Head - 2-buttons	Telecomando 1 leva - 2 pulsanti	1 commande à levier - 2 boutons	1
Cable comunicación mando-actuador 12 m	Station comm. cable 40ft.	Cavo comunicazione comando-attuatore 12m	Câble de communication commande-actionneur 12 m	1
Resistencia terminal BUS	Terminating resistor	Resistenza terminale BUS	Résistance de borne BUS	2
Cable alimentación DC - actuador 9 m.	Harness DC power-actuator 30ft.	Cavo alimentazione DC- attuatore 9m	Câble d'alimentation CC - actionneur 9 m.	1
Cable Start Interlock 9 m	Harness Start Interlock 30ft	Cablaggio start e blocco 9m	Câble de verrouillage de démarrage 9 m	1
Cable encendido «jumper»	Harness Ignition enable jumper	Cablaggio accensione	Câble d'allumage de cavalier	1
Cable encendido 9 m	Harness Ignition 40ft.	Cablaggio accensione	Câble sur 9 m	1
KIT 2ª ESTACIÓN 1 MOTOR INTERIOR	**KIT 2ND STATION 1 ENGINE INBOARD**	**KIT 2° STAZIONE 1MOTORE ENTROBORDO**	**KIT DE 2E STATION 1 MOTEUR IN-BORD**	**GLE1M2EI**
Mando 1 palanca - 2 pulsadores	Single Control Head - 2-buttons	Telecomando- 1 leva- 2 pulsanti	1 commande à levier - 2 boutons	1
Cable comunicación mando-actuador 12 m	Station comm. cable 40ft.	Cavo cablaggio comando-attuatore 12m.	Câble de communication commande-actionneur 12 m	1



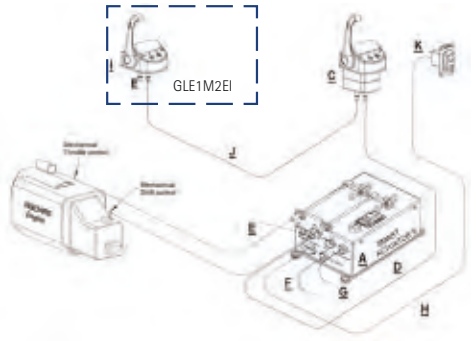

2 MOTORES INTERIORES 1 ESTACIÓN	2 INBOARD ENGINES 1 STATION	2 MOTORI ENTROBORDO 1 STAZIONE	2 MOTEURS IN-BORD 1 STATION	GLE2M1EI
Actuador SA2	Actuator SA2	Attuatore SA2	Actionneur SA2	2
Mando 2 palanca - 2 pulsadores	Twin Control Head - 2-buttons	Telecomando 2 leve- 2 pulsanti	2 commandes à levier - 2 boutons poussoirs	1
Cable comunicación mando-actuador 12 m	Station comm. cable 40ft.	Cavo cablaggio comando-attuatore 12m	Câble de communication commande-actionneur 12 m	1
Cable comunicación actuador-actuador 6 m	Station comm. cable 20ft.	Cavo cablaggio comando-attuatore 6m	Câble de communication actionneur-actionneur 6 m	1
Resistencia terminal BUS	Terminating resistor	Resistenza terminale BUS	Résistance de borne BUS	2
Cable alimentación DC - actuador 9 m.	Harness DC power-actuator 30ft.	Cavo alimentazione BUS-attuatore 9m	Câble d'alimentation CC - actionneur 9 m.	2
Cable Start Interlock 9 m	Harness Start Interlock 30ft	Cablaggio start e blocco 9m	Câble de verrouillage de démarrage 9 m	2
Cable encendido «jumper»	Harness Ignition enable jumper	Cablaggio accensione	Câble d'allumage de cavalier	1
Cable actuador sensor tacómetro	Harness Act. enable tach sender.	Cavo attuatore sensore tachimetro	Câble d'actionneur de capteur de tachymètre	1
Cable encendido 12 m	Harness Ignition 40ft.	Cavo accensione 12m	Câble sur 12 m	1
KIT 2ª ESTACIÓN 2 MOTORES INTERIOR	**KIT 2ND STATION 2 ENGINE INBOARD**	**KIT 2° STAZIONE 2 MOTORI ENTROBORDO**	**KIT DE 2E STATION 2 MOTEURS IN-BORD**	**GLE2M2EI**
Mando 2 palanca - 2 pulsadores	Twin Control Head - 2-buttons	Telecomando 2 leve-2 pulsanti	2 commandes à levier - 2 boutons poussoirs	1
Cable comunicación mando-actuador 12 m	Station comm. cable 40ft.	Cavo cablaggio comando-attuatore 12m	Câble de communication commande-actionneur 12 m	1



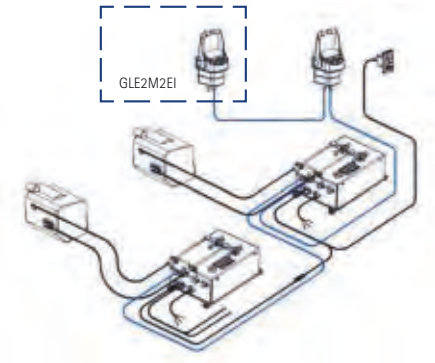

1 MOTOR INTRA/FUERABORDA O FUERABORDA 1 ESTACIÓN + TRIM	1 ENGINE I/O – OUTBOARD 1 STATION + TRIM	1 MOTORE ENTRO/FUORIBORDO O FUORIBORDO 1 STAZIONE + TRIM	1 MOTEUR IN-BORD OU HORS-BORD 1 STATION + GARNITURE	GLE1M1EC
Actuador SA2	Actuator SA2	Attuatore SA2	Actionneur SA2	1
Mando 1 palanca - 6 pulsadores	Single Control Head - 6-buttons	Telecomado 1 leva- 6 pulsanti	1 commande à levier - 6 boutons	1
Cable comunicación mando-actuador 12 m	Station comm. cable 40ft.	Cavo cablaggio comando-attuatore 12m	Câble de communication commande-actionneur 12 m	1
Resistencia terminal BUS	Terminating resistor	Resistenza terminale BUS	Résistance de borne BUS	2
Cable alimentacion DC - actuador 9 m.	Harness DC power-actuator 30ft.	Cavo alimentazione DC- attuatore 9m	Câble d'alimentation CC - actionneur 9 m.	1
Cable Trim/Encendido/Start interlock	Harness Trim/Ignition/Start Interlock	Cavo trim/accensione/start e blocco	Câble de verrouillage Trim / On / Start	1

KIT 2ª ESTACIÓN 1 MOTOR INTRA/FUERABORDA O FUERABORDA 2 ESTACIONES + TRIM	KIT 2ND STATION 1 ENG. I/O – OUTBOARD 2 STATIONS + TRIM	KIT 2° STAZIONE 1 MOTORE ENTRO/FUORIBORDO O FUORIBORDO 2 STAZIONE + TRIM	KIT DE 2E STATION 1 MOTEUR IN-BORD OU HORS-BORD 2 STATIONS + GARNITURE	GLE1M2EC
Mando 1 palanca - 6 pulsadores	Single Control Head - 6-buttons	Telecomado 1 leva- 6 pulsanti	1 commande à levier - 6 boutons	1
Cable comunicación mando-actuador 12 m	Station comm. cable 40ft.	Cavo cablaggio comando-attuatore 12m	Câble de communication commande-actionneur 12 m	1

GLENDINNING



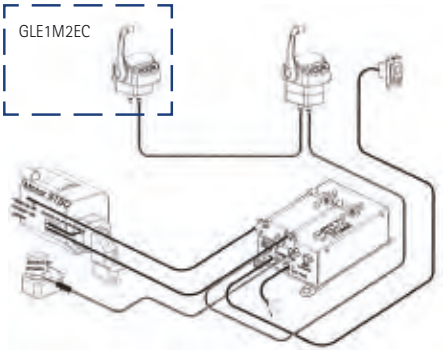

2 MOTORES INTRA/FUERABORDA O FUERABORDA 1 ESTACIÓN + TRIM	2 INBOARD ENGINS 1 STATION	1 MOTORE ENTRO/FUORIBORDO O FUORIBORDO 1 STAZIONE + TRIM	2 MOTEURS IN-BORD OU HORS-BORD 1 STATION + GARNITURE	GLE2M1EC
Actuador SA2	Actuator SA2	Attuatore SA2	Actionneur SA2	2
Mando 2 palancas - 6 pulsadores	Twin Control Head - 6-buttons	Telecomando 2 leve- 6 pulsanti	Contrôle 2 leviers - 6 boutons	1
Cable comunicación mando-actuador 12 m	Station comm. cable 40ft.	Cavo cablaggio comando-attuatore 12m	Câble de communication commande-actionneur 12 m	1
Cable comunicación actuador-actuador 6 m	Station comm. cable 20ft.	Cavo cablaggio comando- attuatore 6m	Câble de communication actionneur-actionneur 6 m	1
Resistencia terminal BUS	Terminating resistor	Resistenza terminale BUS	Résistance de borne BUS	2
Cable alimentacion DC - actuador 9 m.	Harness DC power-actuator 30ft.	Cavo alimentazione DC- attuatore 9m	Câble d'alimentation CC - actionneur 9 m.	2
Cable Encendido/Tacómetro babor.	Harness Ignition/Tach sender port	Cavo accensione/ tachimetro sinistra	Tachymètre pour câble d'alimentation / port.	1
Cable Tacómetro esribor.	Harness Tach sender starboard.	Cavo tachimetro destra	Câble tachymètre tachymétrique.	1
Cables Trim / Start Interlock.	Harness Trim / Start Interlock.	Cavo trim/ start e blocco	Trim / Start Interlock cables.	2

KIT 2ª ESTACION 2 MOTORES INTRA/FUERABORDA O FUERABORDA 2 ESTACIONES + TRIM	KIT 2ND STATION 2 ENGINE I/O – OUTBOARD 2 STATIONS + TRIM	KIT 2° STAZIONE 2 MOTORE ENTRO/FUORIBORDO O FUORIBORDO 2 STAZIONE + TRIM	KIT DE 2E STATION 2 MOTEURS IN-BORD OU HORS-BORDRES 2 STATIONS + GARNITURE	GLE2M2EC
Mando 2 palanca - 6 pulsadores	Twin Control Head - 6-buttons	Telecomando 2 leve- 6 pulsanti	2 commandes à levier - 6 boutons	1
Cable comunicación mando-actuador 12 m	Station comm. cable 40ft.	Cavo cablaggio comando-attuatore 12m	Câble de communication commande-actionneur 12 m	1

GLENDINNING



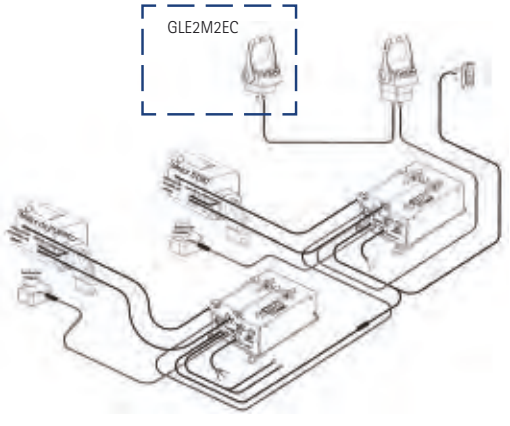

RECAMBIOS MARINOS

SISTEMA DE GOBIERNO Y ACCESORIOS DE INSTALACIÓN
STEERING SYSTEM & INSTALATION ACCESSORIES
SISTEMA DI GUIDA E ACCESSORI DIREZIONE
SYSTÈME DE DIRECTION ET ACCESSOIRES D'INSTALLATION

MANGUERA DE PROTECCION

Manguera de protección para los cables de dirección, mando, etc. desde la salida del casco hasta el motor, presentando un sólo núcleo limpio y ordenado.
Color gris.

PROTECTIVE CABLE SYSTEM

This system gives a good protection to the service cables of outboard engines against dirt and corrosion.
Available in two diameters, complete with fittings in black colour.
Hose in grey colour.

TUBO DI PROTEZIONE

Tubo di protezione per cavi di timoneria, comando etc. dall'uscita dello scafo fino al motore, per tenere i cavi ordinati.
Colore grigio.

GAINE DE PROTECTION

Gaine de protection pour les câbles de direction, de commande, etc. de la sortie de coque au moteur, présentant un seul fourreau propre et bien rangé.
Gris.

REF			Ø INT (mm)		
GS41164	Kit	80 cm	50	1	
GS41165		80 cm	32	1	
GS41160	Terminal casco Hull end fitting Terminale scafo Terminal coque		50	1	
GS41166			32	1	
GS41161	Manguera Hose Tubo Gaine	15 m	50		15 m
GS41167		15 m	32		15 m
GS41162	Terminal motor Engine end fitting Terminale motore Terminal moteur		50	1	
GS41168			32	1	

GOLDENSHIP





GS41160 GS41166 GS41162 GS41168

ARO PROTECTOR

Protección de los cables de control y dirección. Vinilo marino resistente a los rayos U.V., gasolina y aceites.
Se ajusta alrededor de los cables.

CABLE BOOTS

Finishes and protects pass thru hole for wires and cables. Rugged marine vinyl.
Resists UV, gasoline and oil.
Cable tie snugs around wires and cables.

CUFFIA PASSACAVO

Protezione di cavi di controllo e di comando. Vinile marino resistente a raggi UV, benzina e oli.
Si adatta attorno ai cavi.

ANNEAU DE PROTECTION

Protection des câbles de commande et de direction. Vinyle marin résistant aux rayons UV, à l'essence et aux huiles.
Il s'adapte autour des fils.

REF		PARA AGUJERO FOR HOLE PER FORI POUR TROU	
THCB-2	■	2"	1
THCB-1	■	3"	1
THCB-4	■	4 1/2"	1
THCB-2W	□	2"	1
THCB-1W	□	3"	1
THCB-4W	□	4 1/2"	1



Protección de los cables de control y dirección. Fabricado en plástico cromado.

Finishes and protects pass thru hole for wires and cables.
Chrome plated plastic.

Protezione cavi di controllo e di comando.
Fabbricato in plastica cromata.

Protection des câbles de commande et de direction. Fabriqué en plastique chromé.

REF	
THRF-1CP	1



PROTECTOR ESPEJO

Fabricada en aluminio.
Con soporte para terminal del cable de dirección.

PROTECTION PLATE

Aluminum transom plate complete with support and tube for steering cable.

PIASTRA SALVA POPPA

Fabbricata in alluminio. Con supporto per i cavi di timoneria.

PLAQUE DE PROTECTION

Fabriqué en aluminium
Avec support pour de câble de direction.

REF	(mm)	
GS73132	280 x 115	1

GOLDENSHIP

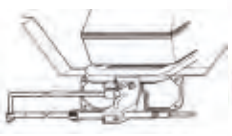



Fabricada en plástico semirígido. Color blanco.

Made in plastic. White.

In plastica semirigida. Colore bianco.

Fabriqué en plastique Couleur blanche.

REF		(mm)	
GS73133	□	430 x 350	1

GOLDENSHIP



Fabricada en plástico semirígido.

Made in plastic.

In plastica semirigida.

Fabriqué en plastique.

REF		(mm)	
GS73130	■	225 x 85	1
GS73131	■	270 x 100	1

GOLDENSHIP



Fabricada en polipropileno resistente a los rayos UV. Color blanco.

Made in solid UV resistant polypropilene. Colour white.

Fabbricata in polipropileno resistente ai raggi UV. Colore bianco

Fabriqué en polypropylène résistant aux UV. Couleur blanche.

REF	A (mm)	B (mm)	C (mm)	GRUESO THICKNESS SPESSORE ÉPAISSEUR (mm)	
OCE100133	390	350	330	8	1
OCE100134	390	350	330	15	1

OCEANSOUTH



CONTRAPLACA TRANSOM

TRANSOM SUPPORT PLATE

CONTROPIASTRA

CONTRE-PLAQUE

Reparte el esfuerzo de los tornillos de sujección del motor. Fabricado en aluminio de alta calidad, de 10mm de espesor.

Distributes stress of engine bolts. Manufactured in high quality cast aluminum. All plates 3/8".

Contropiastra. Fabbricata in alluminio di alta qualità,di 10mm di spessore.

Répartissez l'effort des boulons de fixation du moteur. Fabriqué en aluminium de haute qualité, épaisseur 10 mm.

REF		A	B	C
THTSP-1	Para tornillos superiores For top bolts Per viti superiori Pour vis supérieures	15"	2"	13"
THTSP-2	Para tornillos inferiores For lower bolts Per viti inferiori Pour vis inférieures	12"	2"	10"





TH MARINE

TUERCA DE ENGRASE

STEERING GUARD

DADO LUBRIFICANTE

ÉCROU DE GRAISSAGE

Tuerca engrasadora para todos los cables de dirección. Sella el cable evitando el agua y la corrosión.

Steering guard to be installed in all cable and side mounted hydraulic steering systems to lubricate clean and seal the systems. Made of stainless steel.

Dado lubrificante per tutti i cavi di timoneria. Chiude il cavo evitando l'acqua e la corrosione.

Écrou de graissage pour tous les câbles de direction. Scellez le câble en évitant l'eau et la corrosion.

REF		
GS41170	7/8"	1

GOLDENSHIP



MANDO MECÁNICO | MECHANICAL CONTROL | SCATOLA MECCANICHE | CONTRÔLE MÉCANIQUE

TELEFLEX «XTREME»

new

Cambios mínimos en el esquema de montaje o anidamiento de cables desde Osprey o SL-3.
Impulsiones de popa e interiores. La palanca de doble función controla el acelerador y el cambio de un motor.
Enclavamiento neutro y protección de arranque en marcha (estándar) para controles de montaje lateral.
TRIM/TILT opcional en el mango.
Función de calentamiento del motor neutro (estándar).
Interruptor de apagado de emergencia del motor para controles de montaje lateral.
Acepta todos los tipos de cable OEM y 3300 / 33C.
Cumple / excede todos los estándares aplicables.

Minimal changes to mounting scheme or cable nesting from Osprey or SL-3.
Dual function lever controls both throttle and shift
of one engine. Neutral interlock and start-in-gear protection (standard) for side mount controls.
Optional TRIM / TILT in the handle.
Neutral engine warm-up feature (standard).
Standard lanyard-style cut-off switch for emergency engine shut down for side mount controls.
Accepts every type of OEM and 3300/33C type cable.
Meets/exceeds all applicable standards.

Modifiche minime dello schema di assemblaggio
o di nidificazione dei cavi da Osprey o SL-3.
Azionamenti di popa e interni. La leva a doppia funzione controlla l'acceleratore e il cambio di un motore.
Interblocco neutro e protezione marcia in marcia (standard) per comandi di montaggio laterali.
TRIM / TILT opzionale sul manico.
Funzione di riscaldamento del motore neutro (standard).
Interruttore di arresto di emergenza del motore per comandi di montaggio laterali.
Accetta tutti i tipi di cavi OEM e 3300 / 33C.
Soddisfa / supera tutti gli standard applicabili.

Modifications minimes dans le schéma d'assemblage des câbles d'Osprey ou SL-3.
Commandes latérales ou sur console.
Le levier à double fonction contrôle l'accélérateur et l'inversion de marche.
Verrouillage neutre et protection de démarrage (standard) pour les commandes à montage latéral.
TRIM / TILT en option sur la poignée.
Fonction de chauffage neutre du moteur (standard).
Interrupteur d'arrêt d'urgence du moteur pour commandes à montage latéral.
Accepte tous les types de câbles OEM et 3300 / 33C.
Répond / dépasse toutes les normes applicables.

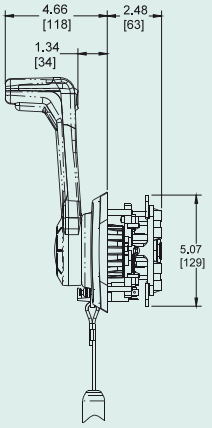



REF	LATERAL CENTRAL NEGRO	SIDE CENTER BLACK	LATERALE CENTRALE NERO	LATERAL NOIR
TXCHX8850P	Interlock Hombre al agua	Interlock Stoper, hang rope assy	Interlock Stacco aut. d'emergencia	Verrouillage Coupe circuit
TXCHX8852P	Interlock Hombre al agua Trim/Tilt	Interlock Stoper, hang rope assy Trim/Tilt switch	Interlock Stacco aut. d'emergencia Trim/Tilt switch	Verrouillage Coupe circuit Trim / Tilt



REF	LATERAL NEGRO	SIDE BLACK	LATERALE NERO	LATERAL NOIR
TXCHX8550P	Interlock Hombre al agua	Interlock Stoper, hang rope assy	Interlock Stacco aut. d'emergencia	Verrouillage Coupe circuit
TXCHX8552P	Interlock Hombre al agua Trim/Tilt	Interlock Trim/Tilt switch Stoper, hang rope assy	Interlock Trim/Tilt switch Stacco aut. d'emergencia	Verrouillage Coupe circuit Trim/Tilt
TXCHX8553P	Interlock	Interlock	Interlock	Verrouillage
TXCHX8555P	Interlock Trim/Tilt	Interlock Trim/Tilt switch	Interlock Trim/Tilt switch	Verrouillage Trim/Tilt

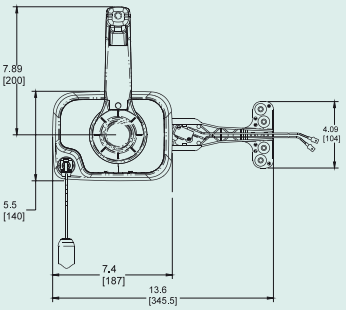

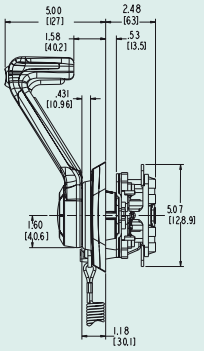

REF	CONSOLA NEGRO	CONSOLE BLACK	CONSOLLE NERO	CONSOLE NOIR
TXCHX8640P	Estándar	Standard	Standard	Standard
TXCHX8642P	Trim/Tilt	Trim/Tilt switch	Trim/Tilt switch	Trim/Tilt

REF	CONSOLA CROMADO	CONSOLE CHROME	CONSOLLE CROMATO	CONSOLE CHROME
TXCHX8650P	Interlock	Interlock	Interlock	Verrouillage
TXCHX8652P	Interlock Trim/Tilt	Interlock Trim/Tilt switch	Interlock Trim/Tilt switch	Trim/Tilt



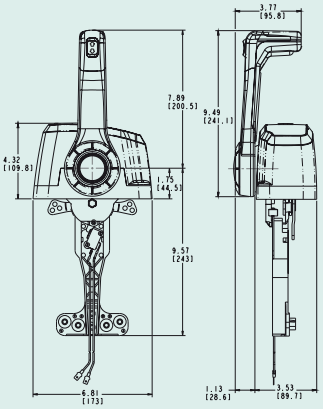



new



REF	CONSOLA DOBLE NEGRO	DOUBLE CONSOLE BLACK	CONSOLLE DOPPIO NERO	DOUBLE CONSOLE NOIR
TXCHX8740P	Estándar	Standard	Standard	Standard
TXCHX8742P	Trim/Tilt	Trim/Tilt switch	Trim/Tilt switch	Trim/Tilt

REF	CONSOLA DOBLE CROMADO	DOUBLE CONSOLE CHROME	CONSOLLE DOPPIO CROMATO	DOUBLE CONSOLE CHROME
TXCHX8240P	Estándar	Standard	Standard	Standard
TXCHX8242P	Trim/Tilt	Trim/Tilt switch	Trim/Tilt switch	Trim/Tilt



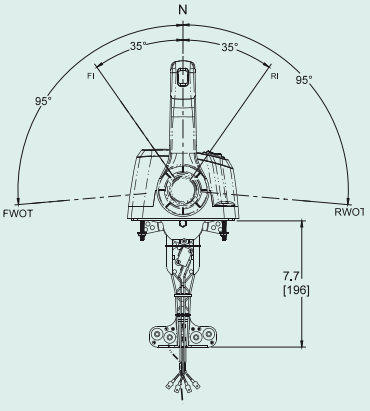

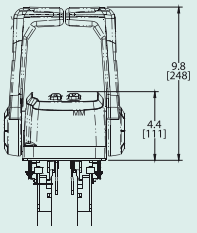

MANDO LATERAL | SIDE CONTROL | MANETTA LATERALE | COMMANDE LATÉRALE

Doble función (acelerador y cambio).
Montaje lateral empotrado.
Apropiado para embarcaciones a vela.
Botón aceleración en punto muerto. Protección de arranque en punto muerto.
Utiliza 2 cables 33-C y 3300C.

Single Lever Dual action side mount control designed for sail boats. Single lever throttle/gear control.
Neutral safety switch option (prevents starting in gear).
Uses 33-C and 3300C cables.

Doppia funzione (acceleratore e cambio).
Montaggio laterale ad incasso. Ideale per imbarcazioni a vela.
Pulsante acceleratore nel folle. Protezione di accensione nel Folle.
Utilizza 2 cavi 33C e 3300C.

Double fonction (accélérateur et inverseur).
Montage latéral encastré.
Convient aux voiliers.
Bouton d'accélération au point mort. Protection démarrage au point mort.
Il utilise 2 câbles 33-C et 3300C.

REF
TX172103



TELEFLEX

SEASTAR SOLUTIONS

Fabricado en plástico Hostafon y palancas de aluminio anodizado, independientes para acelerador y cambio.
Con kit de adaptadores para **cables 33C y 3300s,** OMC, Mercury, Mariner y Suzuki.

Manufactured in Hostafon with levers in light alloy aluminum. Can be installed in both sides. With adaptors for **33C & 3300S,** OMC, Mercury, Mariner and Suzuki.

Fabbricato in plastica.
Manette in alluminio anodizzato, indipendenti per acceleratore e cambio.
Con kit di adattatori per cavi **33C e 3300S,** OMC, Mercury, Mariner e Suzuky

Fabriqué en plastique et leviers en aluminium anodisé, indépendants pour l'accélérateur et l'inverseur.
Avec kit adaptateur pour câbles **33C et 3300s,** OMC, Mercury, Mariner et Suzuki.

REF		
GS40001	☐	114 x 228 mm

GOLDENSHIP



Palanca con doble función (acelerador y cambio).
Para motores intraborda e intra-fueraborda.
Montaje lateral superpuesto.
Utiliza cables 33-C y 3300S

Dual function, single lever control.
For virtually all stern drive, outboard and inboard engines.
Push button for neutral engine warm-up.
For 33-C & 3300S cables

Leva con doppia funzione (acceleratore e cambio).
Per motori entrobordo e entro-fuoribordo.
Montaggio laterale.
Utilizza cavi 33-C e 3300S.

Levier à double fonction (accélérateur et inverseur).
Pour moteurs in-bord et hors-bord.
Montage latéral.
Utilise des câbles **33-C et 3300S**

REF	
GS40015	YMD-RCBOX-00-10 (6C-50H)

GOLDENSHIP

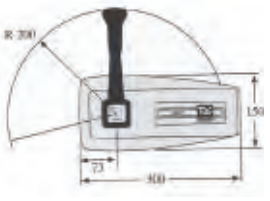



MANDO CONSOLA | CONSOLE CONTROL | MANETTA CONSOLLE | BOITIER DE CONSOLE

Palanca de función única. (1 acelerador + 1 inversor).
Para trabajos pesados.
Con freno en la palanca de acelerador.
Carcasa y palancas cromada de fundición.
Con interruptor de protección de arranque en punto muerto.
Utiliza cables 33-C y 3300C

Chrome plated heavy duty single function control for clutch and throttle.
With twisting brake on throttle handle.
Uses 33-C and 3300C cables.

Leva con unica funzione (1 acceleratore + 1 invertitore).
Corpo e leve in acciaio cromato.
Con interruttore di protezione di partenza nel folle.
Utilizza cavi 33C e 3300C.

Levier à fonction unique. (1 accélérateur + 1 inverseur).
Pour les travaux lourds.
Avec frein sur le levier d'accélérateur.
Leviers en fonte et fonte chromée.
Interrupteur de démarrage au point mort.
Utilise des câbles 33-C et 3300C

REF
PRE36468

PRETECH Cable and Controls

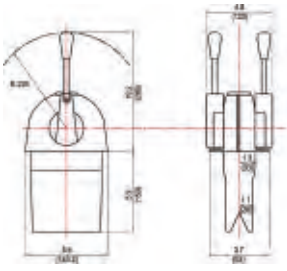



Palanca con doble función (acelerador y cambio).
Para 1 ó 2 motores.
Carcasa cromada de fundición.
Interruptor de protección de arranque en punto muerto.
Aceleración en punto muerto por desplazamiento exterior de la palanca.
Utiliza 2 ó 4 cables 33-C y 3300C.

Chrome plated control for dual function by lever (clutch and throttle).
Handle pulls out to operate neutral throttle
Neutral safety switch to ensure engine only starts when in neutral.
Uses 33-C y 3300C cables.

Leve con doppia funzione (acceleratore e cambio).
Per 1 o 2 motori.
Struttura cromata.
Interruttore di protezione di accensione nel Folle.
Acceleratore nel Folle per il distanziamento esterno dalla leva.
Utilizza 2 o 4 cavi 33-C e 3300C

Levier à double fonction (accélérateur et inverseur).
Pour 1 ou 2 moteurs.
Boîtier en fonte chromée.
Interrupteur de démarrage au point mort.
Accélération au point mort entirant le levier vers l'extérieur.
Utilisez 2 ou 4 câbles 33-C et 3300C.

REF	PALANCA HANDLE LEVA LEVIER	MOTOR ENGINE MOTORI MOTEURS
PRE308601	1	1
PRE308602	2	2



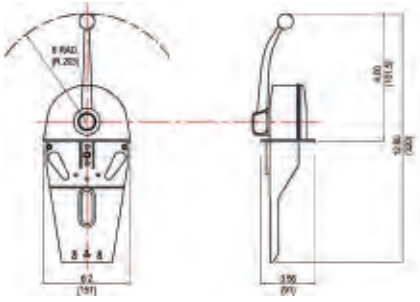

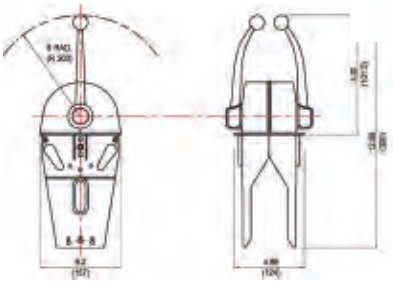

DIFERENCIAL DOBLE PUENTE

Utiliza cables 33-C y 3300S
Conecta los cables de dos mandos de modo que el motor pueda ser accionado independientemente desde los dos mandos.

DUAL STATION TRANSFER UNIT

Uses cables type 33-C & 3300S.
Connects the cables of two stations to one engine.
1 unit for throttle, 1 unit for clutch.

DIFFERENZIALE DOPPIA STAZIONE

Utilizza cavi 33C e 3300S.
Connette i cavi di due comani in modo che il motore si possa azionare indipendentemente dalle manette.

DIFFÉRENTIEL DOUBLE

Utilise des câbles 33-C et 3300S
Connecte deux câbles de commande pour que le moteur puisse fonctionner indépendamment des deux commandes.

REF
GS40010

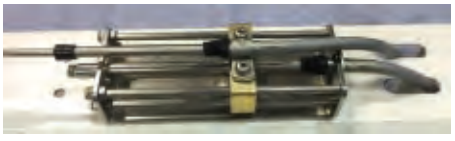

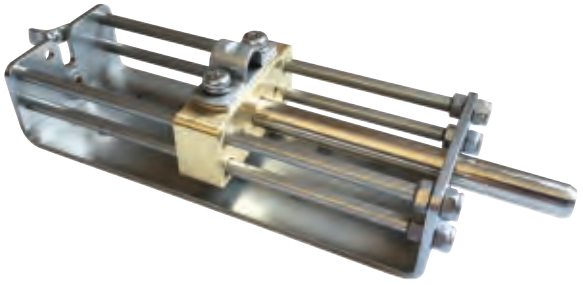

CABLES DE MANDO CONTROL CABLES CAVI COMANDO CÂBLES DE COMMANDE

3300S

Con doble funda para mejor eficiencia de trabajo
Recorrido trabajo: 76 mm.
Rosca 10-32"

Double coating for maximum efficiency.
Travel 3"
Threaded 10-32"

Con doppia guaina per una miglior efficienza di lavoro.
Estensione: 76 mm
Filetto 10.32"

Avec une double gaine pour une meilleure efficacité.
Course: 76 mm.
Fil 10-32 "

REF	
PRE6300S05	5' / 1,50 m
PRE6300S06	6' / 1,80 m
PRE6300S07	7' / 2,10 m
PRE6300S08	8' / 2,45 m
PRE6300S09	9' / 2,75 m
PRE6300S10	10' / 3,05 m
PRE6300S11	11' / 3,35 m
PRE6300S12	12' / 3,65 m
PRE6300S13	13' / 3,95 m
PRE6300S14	14' / 4,25 m
PRE6300S15	15' / 4,60 m
PRE6300S16	16' / 4,90 m
PRE6300S17	17' / 5,20 m
PRE6300S18	18' / 5,50 m
PRE6300S19	19' / 5,80 m
PRE6300S20	20' / 6,10 m
PRE6300S21	21' / 6,40 m

REF	
PRE6300S22	22' / 6,70 m
PRE6300S23	23' / 7,00 m
PRE6300S24	24' / 7,30 m
PRE6300S25	25' / 7,60 m
PRE6300S26	26' / 7,90 m
PRE6300S27	27' / 8,25 m
PRE6300S28	28' / 8,55 m
PRE6300S29	29' / 8,85 m
PRE6300S30	30' / 9,15 m
PRE6300S31	31' / 9,50 m
PRE6300S32	32' / 9,75 m
PRE6300S33	33' / 10,00 m
PRE6300S34	34' / 10,35 m
PRE6300S35	35' / 10,65 m
PRE6300S36	36' / 11,00 m
PRE6300S38	38' / 11,50 m
PRE6300S40	40' / 12,10 m

REF	
PRE6300S42	42' / 12,70 m
PRE6300S44	44' / 13,30 m
PRE6300S46	46' / 14,00 m
PRE6300S48	48' / 14,50 m
PRE6300S50	50' / 15,00 m

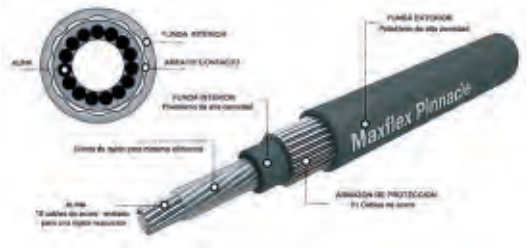

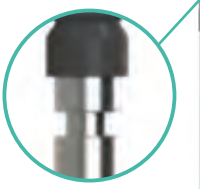



maxflex
PINNACLE

3300C

Recorrido trabajo: 76 mm. Rosca 10-32"
Travel 3" Threaded 10-32"
Estensione: 76 mm Filetto 10-32"
Course: 76 mm. Fil 10-32 "

REF	RO	
PRE3300C05	YMM-21005-00-00	5' / 1,50 m
PRE3300C06	YMM-21006-C8-00	6' / 1,80 m
PRE3300C07	YMM-21007-C8-00	7' / 2,10 m
PRE3300C08	YMM-21008-C8-00	8' / 2,45 m
PRE3300C09	YMM-21009-C8-00	9' / 2,75 m
PRE3300C10	YMM-21010-C8-00	10' / 3,05 m
PRE3300C11	YMM-21011-C8-00	11' / 3,35 m
PRE3300C12	YMM-21012-C8-00	12' / 3,65 m
PRE3300C13	YMM-21013-C8-00	13' / 3,95 m
PRE3300C14	YMM-21014-C8-00	14' / 4,25 m
PRE3300C15	YMM-21015-C8-00	15' / 4,60 m
PRE3300C16	YMM-21016-C8-00	16' / 4,90 m
PRE3300C17	YMM-21017-C8-00	17' / 5,20 m
PRE3300C18	YMM-21018-C8-00	18' / 5,50 m
PRE3300C19	YMM-21019-C8-00	19' / 5,80 m
PRE3300C20	YMM-21020-C8-00	20' / 6,10 m
PRE3300C21	YMM-21021-C8-00	21' / 6,40 m
PRE3300C22	YMM-21022-C8-00	22' / 6,70 m
PRE3300C23	YMM-21023-C8-00	23' / 7,00 m
PRE3300C24	YMM-21024-C8-00	24' / 7,30 m

REF	RO	
PRE3300C25	YMM-21025-C8-00	25' / 7,60 m
PRE3300C26	YMM-21026-C8-00	26' / 7,90 m
PRE3300C27	YMM-21027-C8-00	27' / 8,25 m
PRE3300C28	YMM-21028-C8-00	28' / 8,55 m
PRE3300C29	YMM-21029-C8-00	29' / 8,85 m
PRE3300C30	YMM-21030-C8-00	30' / 9,15 m
PRE3300C31		31' / 9,50 m
PRE3300C32		32' / 9,75 m
PRE3300C33		33' / 10,00 m
PRE3300C34		34' / 10,35 m
PRE3300C35		35' / 10,65 m
PRE3300C36		36' / 11,00 m
PRE3300C38		38' / 11,50 m
PRE3300C40		40' / 12,10 m
PRE3300C42		42' / 12,70 m
PRE3300C44		44' / 13,30 m
PRE3300C46		46' / 14,00 m
PRE3300C48		48' / 14,50 m
PRE3300C50		50' / 15,00 m

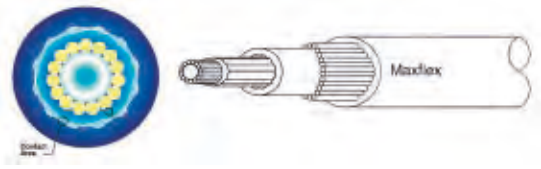



maxflex

PRETECH Cable and Controls

4300C

Para trabajos pesados. Recorrido trabajo: 76 mm. Rosca 1/4-28"
Heavy Duty. Travel 3" Threaded 1/4-28"
Per lavori pesanti Estensione 7,6cm Filetto 1/4-28"
Pour les travaux lourds. Course: 76 mm. Filetage 1/4-28 "

REF	
PRE6500C05	5' / 1,50 m
PRE6500C06	6' / 1,80 m
PRE6500C07	7' / 2,10 m
PRE6500C08	8' / 2,45 m
PRE6500C09	9' / 2,75 m
PRE6500C10	10' / 3,05 m
PRE6500C12	12' / 3,65 m
PRE6500C14	14' / 4,25 m
PRE6500C16	16' / 4,90 m
PRE6500C18	18' / 5,50 m
PRE6500C19	19' / 5,80 m
PRE6500C21	21' / 6,40 m
PRE6500C23	23' / 7,00 m

REF	
PRE6500C25	25' / 7,60 m
PRE6500C27	27' / 8,25 m
PRE6500C29	29' / 8,85 m
PRE6500C31	31' / 9,50 m
PRE6500C33	33' / 10,00 m
PRE6500C35	35' / 10,65 m
PRE6500C37	37' / 11,28 m
PRE6500C39	39' / 11,89 m
PRE6500C41	41' / 12,56 m
PRE6500C43	43' / 13,11 m
PRE6500C45	45' / 13,71 m
PRE6500C47	47' / 14,33 m



PRETECH Cable and Controls

maxflex

PINNACLE

CABLES DE STOP — UTILITY CABLE — CAVO DI STOP — TIRETTES D'ARRÊT

REF	
PRE31507	7'/ 2,10 m
PRE31508	8'/ 2,45 m
PRE31509	9'/ 2,75 m
PRE31510	10'/ 3,05 m
PRE31511	11'/ 3,35 m

REF	
PRE31512	12'/ 3,65 m
PRE31513	13'/ 3,95 m
PRE31514	14'/ 4,25 m
PRE31515	15'/ 4,60 m
PRE31516	16'/ 4,90 m

PRETECH Cable and Controls

maxflex



ACCESORIOS PARA CABLES DE MANDO | ACCESSORIES FOR CONTROL CABLES | ACCESSORI CAVI COMANDI | ACCESSOIRES POUR CÂBLES DE COMMANDE

REF					
PRE331125	Horquilla	Fork	Forcella	Chappe	1
PRE31799	Rótula	Ball joint	Snodo	Rotule	1
PRE308650	Pivote	Pivot	Perno	Pivot	1
PRE332010	Abrazadera	Clamp	Ferma cavo	Collier	1
PRE331538	Platina	Shim	Piastrina	Platine	1
PRE331980	Terminal ojo	Terminale eye	Terminale cavo	Terminal	1
PRE336174	Fijador 1 cable	Stop collar 1	Fissatore 1 cavo	Fixateur de câble	1
PRE215154	Fijador 2 cable	Stop collar 2	Fissatore 2 cavi	Fixateur 2 câbles	1
PRE31916	Tirador SD para cable de paro y otros usos	SD control. Handle for throttle, choke, stop, etc.	Tirante SD Tirante per cavi e altri usi	Poignée SD pour câble d'arrêt et autres utilisations	1
PRE31917	Soporte angular para tirador SD	Mounting bracket for SD control	Supporto per tirante SD	Support angulaire pour SD shooter	1


PRE331125


PRE31799


PRE308650


PRE332010


PRE331538


PRE31916


PRE331980


PRE336174


PRE215154


PRE31917

SISTEMA DE COMBUSTIBLE | FUEL SYSTEM | SISTEMA DI COMBUSTIBILE | SYSTÈME DE CARBURANT

CONECTOR TANQUE DE COMBUSTIBLE | TANK CONNECTOR | ATTACCO PER SERBATOIO | CONNECTEUR POUR RÉSERVOIR DE CARBURANT

REF	R.O. OEM			
GS31025		MERCURY/MARINER	1/4" NPT	1
GS31073		YAMAHA		1
GS31083	772681	JOHNSON/EVINRUDE		1
GS31081		MERCURY/MARINER		1


GS31025


GS31073


GS31083


GS31081

REF	R.O. OEM			
GS31022		MERCURY/MARINER STANDAR		1
GS31023		MERCURY/MARINER NEW		1
GS31020		YAMAHA	1/4" NPT	1
GS31021		JOHSON/EVINRUDE	1/4" NPT	1


GS31022


GS31023


GS31020


GS31021

GOLDENSHIP

MADE IN THE USA

CONECTOR DOBLE | DOUBLE CONNECTOR | CONNETTORE DOPPIO | DOUBLE CONNECTEUR

REF			
GS31091	OMC	8 mm	1
GS31092	YAMAHA	8 mm	1
GS31093	MERCURY/MARINER	8 mm	1

GOLDENSHIP


GS31091


GS31092


GS31093

CODO DEPÓSITO DE LATÓN / TANK ELBOW IN BRASS / GOMITO SERBATOIO / COUDE EN LAITON

REF		
GS31068	1/4" NPT	1

GOLDENSHIP



CONECTOR T / T CONNECTOR / CONNTETTORE "T" / CONNECTEUR T

Para conectar dos motores a un sólo depósito, o viceversa.

Fabricado en latón.
Made in machined brass.

Per collegare due motori a un singolo serbatoio o viceversa.

Pour connecter deux moteurs à un seul réservoir, ou vice versa.

REF		
GS31069	1/4" NPT	1

GOLDENSHIP



PASAMAMPAROS / THRU HULL / PASSA SCAFO / PASSE CLOISONS

Para atravesar mamparos de hasta 12 mm.
Fabricado en latón.

For bulkhead up to 12 mm.
Made in machined brass.

Per attraversare paratie fino a 12 mm.
Fabbricato in ottone.

Pour traverser des cloisons jusqu'à 12 mm.
En laiton.

REF		
GS31064	3/8"	1

GOLDENSHIP



VÁLVULA ANTIRETORNO / NON-RETURN VALVE / VALVOLA ANTI-RITORNO / CLAPET ANTI-RETOUR

Válvula antiretorno para líneas de combustible y ventilación.

In-Line non-return valve for fuel pipes.

Valvola anti-ritorno per linee di combustibile e ventilazione.

Clapet anti-retour pour les conduites de carburant et de ventilation.

REF		
GS31003	8 mm	1
GS31004	10 mm	1
GS31005	12 mm	1

GOLDENSHIP



VÁVULA DE COMBUSTIBLE / FUEL VALVE / VALVOLA CARBURANTE / VANNE POUR CARBURANT

Válvula manual a 3 vías, para combustible. Fabricada en latón pulido. Montaje mediante soporte con 2 agujeros. Para conectar 2 depósitos a un solo motor.

Three ways fuel valve. Made in brass, with 2 holes flange.
To connect 2 tanks to one single feeding pipe.

Valvola manuale a 3 uscite, per carburante. Fabbricata in ottone. Fissare mediante supporto con 2 fori. Per collegare 2 serbatoi a un solo motore.

Vanne manuelle 3 voies, pour carburant. Fabriqué en laiton poli. Montage par support à 2 trous pour connecter 2 réservoirs à un seul moteur.

REF			
GS31010	1/4"	10 mm	1
GS31011	3/8"	10-13 mm	1





GOLDENSHIP

REF			
GS30111	1/4"	10 mm	1
GS30112	3/8"	12 mm	1



Válvula manual a 2 vías, para combustible.
Fabricada en latón pulido.

Two ways fuel valve. Made in brass.

Valvola manuale a 2 uscite, per carburante. Fabbricata in ottone.

Vanne manuelle 2 voies, pour carburant.
Fabriqué en laiton poli.

REF			
GS31006	1/4" NPT	1/4" NPT	1

GOLDENSHIP



Válvula manual para combustible. Fabricada en latón cromado con racors. Puede montarse en línea o desmontando el soporte, incorporarla directamente al depósito.

Manual and remote fuel valve. Made in chrome plated brass. Can be mounted in line with hose or directly on gasoline tanks.

Valvola manuale per carburante. Fabbricata in ottone cromato con raccordo. Si puo' montare in línea o smontando il supporto, incorporarla direttamente al serbatoio.

Vanne manuelle pour le carburant. Fabriqué en laiton chromé avec raccords. Elle peut être montée en ligne ou en l'intégrant directement dans le réservoir sans son support.

REF			
GS31012	1/4"	10 mm	1

GOLDENSHIP





ELECTROVÁVULA DE COMBUSTIBLE

FUEL ELECTRO-VALVE

ELETTROVALVOLA CARBURANTE

ÉLECTROVANNE POUR CARBURANT

Incluye conexiones para mangueras flexibles y para tubo de cobre. Accionamiento a 12V y manual. **CE 94/25 (EN28846) y R.I.Na.DIP 61697**

Fuel cut off electrovalve 12V with manual cock. Includes racors for felxible hose and cooper tube. **CE 94/25 (EN28846) & R.I.Na.DIP 61697**

Include raccordi per tubo flessibile e per tubi di rame. Avviamento a 12V e manuale. **CE 94/25 (EN28846) e R.I.Na.DIP 61697**

Comprend des connexions pour tuyaux flexibles et tube en cuivre. Entraînement 12V et manuel. **CE 94/25 (EN28846) et R.I.Na.DIP 61697**

REF					
GS31013	12V	100l/h	1/4"	8-10 mm	1

GOLDENSHIP



FILTROS DE COMBUSTIBLE

FUEL FILTERS

FILTRO BENZINA

FILTRES À CARBURANT

FILTRO PARA MONTAJE EN LINEA

IN-LINE FILTER

FILTRO PER MONTARE IN LINEA

FILTRE POUR MONTAGE EN LIGNE

REF			
GS31185	6-8 mm	1	
GS31186	6-8 mm	1	Cubeta extraíble Removable bowl Vasca estraibile Seau amovible

GOLDENSHIP



GS31185



GS31186

REF		
REC35-80365M	6 mm	2-8 HP (2 T/ Strokes) 8-15 HP (4 T/ Strokes)

RECMAR



REF	R.O. OEM		
PAF4-05000300	35-16248	6 mm	4-9.8 HP (2 T/ Strokes) 4-25 HP (4 T/ Strokes)



REF			
REC40145	1/4"		
REC40155	5/16"		
REC40165	3/8"		
REC40135		5/16"	3/8"

RECMAR



REF			
GS31001	50 l/h	6-8 mm	1
GS31002	150 l/h	8-10 mm	1

GOLDENSHIP



GS31001



GS31002

De metal y cristal. Montaje en línea. Racors para mangueras de 6-8-10 mm.

In-line. Clear body permits visual inspection. Racors 6-8-10 mm.

Di metallo e cristallo. Montare in línea. Raccordi per tubi da 6-8-10 mm.

En métal et verre. Montage en ligne Raccors pour tuyaux 6-8-10 mm.

REF		
GS30435	6, 8, 10 mm	1

GOLDENSHIP



FILTRO COMBUSTIBLE SEPARADOR DE AGUA / WATER SEPARATING FUEL FILTER / FILTRO SEPARATORE ACQUA-BENZINA / FILTRE À CARBURANT SÉPARATEUR D'EAU

REF	MICRAS MICRON	
REC24942	10	4-7/16"
REC35-802893Q01	10	4-7/16"
REC855686	28	4-7/16"
REC35-802893Q	25	3-3/4"
RACPFF5510	10	4-7/16"

RACOR



RACPFF5510

RECmar



REC24942 REC35-802893Q01 REC855686 REC35-802893Q

Filtro original. OEM filter. Filtro benzina originale. Filtre d'origine

REF	MICRAS MICRON	
RM35-802893Q	10	3-3/4"





FILTRO CON BRACKET
Bracket de Aluminio.
Con 2 tapones de bronce y 1 tubo de extensión.

OEM FILTER WITH BRACKET
Cast Aluminium Bracket.
With 2 brass plugs & 1 extension tube.

FILTRO BENZINA CON SUPPORTO
Supporto in alluminio.
Con 2 tappi di bronzo e 1 tubo di estensione.

FILTRE AVEC SUPPORT
Support en aluminium
Avec 2 bouchons en bronze et 1 tube d'extension.

REF	MICRAS MICRON		
REC24950	25	1/4"	50 GPH
REC24952	10	1/4"	50 GPH

RECmar

FILTRO DECANTADOR GASOLINA / COMPLETE FUEL FILTER / FILTRO DECANTATORE BENZINA / FILTRE DÉCANTEUR POUR ESSENCE

Filtro de combustible con braket. Complete fuel filter with braket. Filtro combustibile con supporto. Filtre à carburant avec support.

REF		
RAC23299-10	RAC23289-10	130 HP (4 T/ Strokes)

RACOR

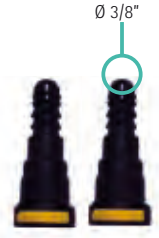



RECmar

REF	OEM		MICRAS MICRON		
REC90794-46866	907-94469-05	REC90794-46868	10	117 l/h	175 hp







LLAVE PARA FILTRO
FILTER KEY
CHIAVE DA FILTRO
CLÉ À FILTRE

REF
RECYS-225-15



Consultar filtros específicos para una marca en su catálogo.
Consult specific filters for a brand in his catalog.
Consulta i filtri specifici per un marchio nel suo catalogo.
Consulter les filtres spécifique à une marque dans votre catalogue.

REF	
PAF40-0701000EI	70 hp



new

FILTRO DECANTADOR GASOLINA — COMPLETE FUEL FILTER — FILTRO DECANTATORE BENZINA — FILTRE DÉCANTEUR POUR ESSENCE

RACOR



	RAC120R-RAC-01	RAC320R-RAC-01	RAC320R-INOX-01	RAC320R-RAC-02
FLUJO MÁXIMO MAX. FLOW FLUSSO MASSIMO FLUX MASSIMALE	114 l/h 30 gph	340 l/h 60 gph	340 l/h 60 gph	340 l/h 60 gph
ELEMENTO ELEMENT ELEMENTO ELEMENT	RACS3240	RACS3213	RACS3213	RACS3220UL
CAZOLETA TRANSPARENTE (sólo se recomienda para fueraborda.) CLEAR BOWL (Just for outboards) VASCHETTA TRASPARENTE (Solo nei fuoribordo.) CAZOLETA TRANSPARENTE (Uniquement recommandé pour le hors-bord.)	✔	✔	✔	✘
ROSCAS CENTRALES CENTRAL THREADS FILETTO CENTRALE FILS CENTRAUX	M18 x 1.5	1 1/4"	1 1/4"	1 1/4"
TAMAÑO ROSCA CABEZA HEAD PORT SIZE DIMENSIONE VITE TESTA TAILLE DU FIL DE TÊTE	1/4-18 NPTF	1/4-18 NPTF	1/4-18 NPTF	1/4-18 NPTF
ALTURA X Ø HEIGHT X Ø ALTEZZA X Ø HAUTEUR X Ø	166 x 81 x 81 mm	238 x 102 x 102 mm	238 x 102 x 102 mm	238 x 102 x 102 mm
PESO WEIGHT PESO POIDS	0,5 kg	0,9 kg	0,9 kg	0,9 kg
CAIDA DE PRESIÓN PRESSURE DROP CADUTA DI PRESSIONE CHUTE DE PRESSION	0.15 PSI 0.01 bar	0.61 PSI 0.04 bar	0.61 PSI 0.04 bar	0.61 PSI 0.04 bar
PRESIÓN MÁXIMA MAX. PRESSURE PRESSIONE MASSIMA PRESSION MAXIMALE	7 PSI 0.05 bar	7 PSI 0.05 bar	7 PSI 0.05 bar	7 PSI 0.05 bar
DESMONTAJE CARTUCHO-CAZOLETA ELEMENT REMOVAL UNDERBOWL RIMOZIONE DELLA CARTUCCIA DÉMONTAGE DE LA CARTOUCHE	25,4 mm 1"	25,4 mm 1"	25,4 mm 1"	25,4 mm 1"
TEMPERATURA DE TRABAJO OPERATING TEMPERATURE TEMPERATURA DI LAVORO TEMPERATURE DE TRAVAIL	-40ºC +124ºC			

ELEMENTOS DE RECAMBIO · ELEMENT · ELEMENTI DI RICAMBIO · CARTOUCHE DE RECHANGE

REF	R.O.M. OEM	FILTRO FILTER FILTRO FILTRE
RACS3240		RAC120R-RAC-01
LENS3240		
RACS3227	YMM-2E227-00	Yamaha-Suzuki
LENS3227		
RACS3213		RAC320R-RAC-01
LENS3213		RAC320R-RAC-01 INOX RAC320R-RAC-03
RACS3214		Johnson & Evinrude
RACS3228UL		RAC320R-RAC-02, con/with/con/avec bracket RACOR



LENS3240
LENS3227
LENS3214



RACS3240
RACS3227
RACS3214



RACS3228UL

RÁCORES · RACORS · RACCORDI · RACCORDS

Para | for | per | pour: RAC120R-RAC-01, RAC320R-RAC-01, RAC320R-RAC-02

REF		90º	0º	
GS31065	1/4" NPT	3/8"		1
GS31066	1/4" NPT		5/16"	2
GS31067	1/4" NPT		3/8"	2

GOLDENSHIP



GS31065



GS31066
GS31067

SISTEMA ELÉCTRICO ELECTRIC SYSTEM · SISTEMA ELETTRICO · SYSTÈME ÉLECTRIQUE

FUSIBLE ATC · MARINE FUSES ATC · FUSIBILE ATC · FUSIBLE ATC

Ref		(mm)	
GS11501	3 A	19 x 19	5
GS11502	4 A	19 x 19	5
GS11503	10 A	19 x 19	5
GS11504	15 A	19 x 19	5
GS11505	20 A	19 x 19	5
GS11506	30 A	19 x 19	5

GOLDENSHIP



Con LED indicador de fundido. · With illuminated LED when blown. · Con indicatore LED. · Avec indicateur LED.

BLUE SEA SYSTEMS

Ref		(mm)	
BS5291	3 A	19 x 19	2
BS5292	5 A	19 x 19	2
BS5293	7,5 A	19 x 19	2
BS5294	10 A	19 x 19	2
BS5295	15 A	19 x 19	2
BS5296	20 A	19 x 19	2
BS5297	25 A	19 x 19	2
BS5298	30 A	19 x 19	2
BS5299	40 A	19 x 19	2







FUSIBLE ATM · MARINE FUSES ATM · FUSIBILE ATM · FUSIBLE ATM

Ref		(mm)	
AM603905	5 A	11 x 16	2
AM603910	10 A	11 x 16	2
AM603915	15 A	11 x 16	2
AM603920	20 A	11 x 16	2
AM603930	30 A	11 x 16	2

ANCOR MARINE GRADE™ PRODUCTS



FUSIBLE MAXI · FUSES MAXI · FUSIBILE MAXI · FUSIBLE MAXI

Contactos estañados para resistir a la corrosión. · Tin plated connector blades for corrosión resistance. · Connettori stagni per resistere alla corrosione. · Contacts étamés pour résister à la corrosion.

Ref		
BS5138	30 A	1
BS5139	40 A	1
BS5140	50 A	1
BS5141	60 A	1
BS5142	70 A	1
BS5143	80 A	1

BLUE SEA SYSTEMS

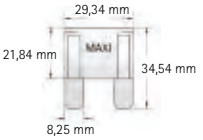



DESCONECTADOR DE SEGURIDAD

Interruptor de encendido para motores. Aisla los circuitos en unidades dobles para prevenir el retorno al alternador.

IGNITION KILL SWITCHES

Emergency and stop switch. Isolates circuits on dual units to prevent feedback.

INTERRUTTORE DI STOP

Interruttore di accensione per motori. Isola i circuiti in doppie unità per prevenire il ritorno all'alternatore.

INTERRUPTEUR DE SECURITE

Contacteur d'allumage pour moteurs. Isolez les circuits en unités doubles pour empêcher le retour à l'alternateur.

REF					
THKS-1	Un fueraborda	Single outboard	Un fuoribordo	Un hors-bord	1
THKS-2	Un intraborda	Single I/O	Un entrobordo	Un inboard	1
THKS-12	Dos fuerabordas	Dual outboard	Due fuoribordo	Deux hors-bord	1
THKS-22	Dos intrabordas	Dual I/O	Due entrobordo	Deux inboard	1
THL-4	Cuerda recambio	Spare lanyard	Corda ricambio	Corde de rechange	1



REF	RO OEM		
REC87-823609A17	87-823609A17	Mercury / Mariner	1
REC37800-93954	37800-9354 37800-9353	Suzuki	1



REC87-823609A17



REC37800-9354

Interruptor de encendido para todo tipo de motores fueraborda o intraborda.

Emergency and stop switch for inboard or outboards.

Interruttore di accensione per tutti i tipi di motori entrobordo e fuoribordo.

Contacteur d'allumage pour tous types de moteurs hors-bord ou in-bord.

REF					
REC40970	Conjunto completo	Complete kit	Kit completo	Ensemble complet	1
REC40990	Cuerda tirador recambio	Spare	Corda tirante ricambio	Corde de rechange	1
GS11290	Conjunto completo	Complete kit	Kit completo	Ensemble complet	1
GS11291	Cuerda recambio	Spare lanyard	Corda ricambio	Corde de rechange	1
GS11292	Kit	Kit	Kit	kit	1



REC40970- REC40990



GS11290



GS11292



GS11291

REF	RO OEM		
REC37830-89E03	37830-84E03	Suzuki	1
REC37820-92E03	37820-92E00	Suzuki	1
REC69W-82575-00	69W-82575-0	Yamaha / Mariner	1
REC688-82575-01	688-82575-01	Yamaha / Mariner	1
REC200		Mercury / Mariner	1
REC369-0682-0	369-0682-00	Tohatsu	



REC37830-89E03



REC37820-92E03



REC69W-82575-00



REC688-82575-01



REC369-0682-0



REC200

KITS LLAVES | KILL SWITCHES KEYS | KIT CHIAVI | KITS DE CLÉS

REF		
GS11294	Johnson / Evinrude OMC Mercury Yamaha Honda Suzuki Tohatsu	1

GOLDENSHIP



LLAVE DE ARRANQUE | IGNITION STARTER SWITCHES | CHIAVE DI AVVIAMENTO | CONTACTEUR À CLÉ

3 posiciones con retroceso, Off-Contacto-Arranque (Choke).
Poliester anticorrosión.

3 positions, Off-Run-Start.
Magneto.

3 posizioni con ritorno: Off-Contatto-Avviamento.
Poliestere anticorrosione.

3 positions, Off-Contact-Start (Choke).
Polyester anti-corrosion.



REF	PANELES PANELS PANNELLI PANNEAUX	TERMINALES TERMINALS TERMINALI BORNES	POSICIONES POSITIONS POSIZIONE POSITIONS	
MP39200	28 mm	3	3	1

3 posiciones con retroceso, Off-Contacto-Arranque.
Poliester anticorrosión.

3 positions, Off-Run-Start.
Conventional

3 posizioni con ritorno: Off-Contatto-Avviamento.
Poliestere anticorrosione.

3 positions, Off-Contact-Start.
Polyester anti-corrosion.



REF	RO OEM	TERMINALES TERMINALS TERMINALI BORNES	POSICIONES POSITIONS POSIZIONE POSITIONS	
MP39760	393301 508180	5 + 1	3	1

3 posiciones con retroceso, Off-Contacto-Arranque (Choke).
Poliester anticorrosión.
Para fuerabordas Mercury y Mariner.

3 positions, Off-Run-Start.
Magneto

3 posizioni con ritorno: Off-Contatto-Avviamento.
Poliestere anticorrosione.
Per fuoribordo Mercury e Mariner.

3 positions, Off-Contact-Start (Choke).
Polyester anti-corrosion.
Pour les moteurs hors-bord Mercury et Mariner.



REF	RO OEM	TERMINALES TERMINALS TERMINALI BORNES	POSICIONES POSITIONS POSIZIONE POSITIONS	
MP41070	MC 87-17009A2, 87-17009A5	6	3	1

3 posiciones con retroceso, Off-Contacto-Arranque (Choke).
Poliester anticorrosión.
Para fuerabordas Mercury y Mariner.

3 positions, Off-Run-Start.
Magneto.

3 posizioni con ritorno: Off-Contatto-Avviamento.
Poliestere anticorrosione.
Per fuoribordo Mercury e Mariner.

3 positions, Off-Contact-Start (Choke).
Polyester anti-corrosion.
Pour les moteurs hors-bord Mercury et Mariner.



REF	RO OEM	TERMINALES TERMINALS TERMINALI BORNES	POSICIONES POSITIONS POSIZIONE POSITIONS	
MP41000	MC 87-88107	6	3	1

3 posiciones con retroceso, Off-Contacto-Arranque.
Poliester anticorrosión.
Montadas por Bayliner y SeaRay (1990+).

3 positions, Off-Run-Start.
Conventional.

Chiave di avviamento a 3 posizioni con ritorno: Off-Contatto-Avviamento.
Poliestere anticorrosione.
Montato da Bayliner e SeaRay dall'anno 1990.

3 positions, Off-Contact-Start.
Polyester anti-corrosion.
Assemblé par Bayliner et SeaRay (1990+).



REF	PANELES PANELS PANNELLI PANNEAUX	TERMINALES TERMINALS TERMINALI BORNES	POSICIONES POSITIONS POSIZIONE POSITIONS	
MP41030	15 mm	3	3	1

3 posiciones con retroceso, Off-Contacto-Arranque.
Fabricada en latón con frontal cromado.
Chrome plated brass face nut and brass back-up nut.

3 positions with return, Off-Ignition-Start.

3 posizioni con ritorno Off-Contatto-Avviamento.
In ottone con frontale cromato.

3 positions, Off-Contact-Start.
Fabriqué en laiton avec façade chromée.
Écrou frontal en laiton chromé et écrou d'appui en laiton.



GOLDENSHIP

REF	PANELES PANELS PANNELLI PANNEAUX	TERMINALES TERMINALS TERMINALI BORNES	POSICIONES POSITIONS POSIZIONE POSITIONS	
GS11150	28 mm	3, 15A 12V	3	1

Fabricada en latón con frontal protector de goma. 3 posiciones con retroceso, Off-Contacto-Arranque.

Made in brass with rubber cap protector. 3 positions with return, Off-Ignition-Start.

Prodotta in ottone con parte frontale in gomma, 3 posizioni con ritorno, Off-Contatto-Avviamento.

En laiton avec façade de protection en caoutchouc. 3 positions: Off-Contact-Start.

REF	TERMINALES TERMINALS TERMINALI BORNES	POSICIONES POSITIONS POSIZIONE POSITIONS	
GS11151	3	3	1
GS11154	4	3	1

GOLDENSHIP



Plástico con frontal protector de goma. 3 posiciones con retroceso, Off-Contacto-Arranque.

Made in plastic with rubber cap protector. 3 positions with return, Off-Ignition-Start.

In plastica con parte frontale in gomma 3 posizioni con ritorno, Off-Contatto-Avviamento.

Plastique avec façade de protection en caoutchouc. 3 positions : Off, contact et démarrage.

REF	TERMINALES TERMINALS TERMINALI BORNES	POSICIONES POSITIONS POSIZIONE POSITIONS	
GS11152	3	3	1
GS11153	5	3	1

GOLDENSHIP

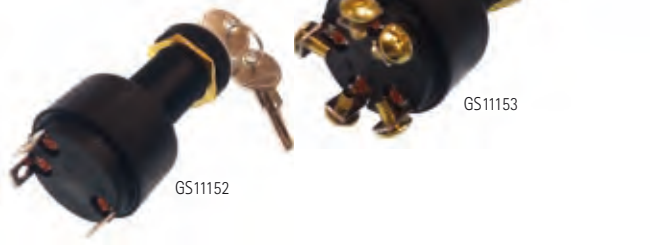

GS11153

GS11152

Plástico. 4 posiciones con retroceso, Accesorios-Off-Contacto-Arranque.

Made in plastic with rubber cap protector. 4 positions with return, Acc-Off-Ignition-Start.

Prodotta in plastica. 4 posizioni con ritorno, Blower-Off-Contatto-Avviamento.

Plastique 4 positions avec recul, Accessoires-Off-Contact-Start.

REF	PANELES PANELS PANNELLI PANNEAUX	TERMINALES TERMINALS TERMINALI BORNES	POSICIONES POSITIONS POSIZIONE POSITIONS	
GS11155	15 mm = 5/8"	7	4	1
GS11156	6 mm = 1/4"	7	4	1

GOLDENSHIP



Fabricada en plástico. 3 posiciones con retroceso, Off-Contacto-Arranque (Starter).

Made in plastic. 3 positions with return, Off-Ignition-Start (Choke).

Prodotta in plastica. 3 posizioni con ritorno, Off-Contatto-Avviamento (Starter).

En plastique. 3 positions avec recul, démarreur sans contact.

REF	PANELES PANELS PANNELLI PANNEAUX	TERMINALES TERMINALS TERMINALI BORNES	POSICIONES POSITIONS POSIZIONE POSITIONS	
GS11158	15 mm = 5/8"	6	3	1
GS11157	6 mm = 1/4"	6	3	1

GOLDENSHIP



GS11157

GS11158

Fabricada en plástico. Con cables incluidos. 3 posiciones con retroceso, Off-Contacto-Arranque (Starter).

Made in plastic. 3 positions with return, Off-Ignition-Start (Choke). With wires included.

Prodotta in plastica. Con cavi inclusi. 3 posizioni con ritorno, Off-Contatto-Avviamento (Starter).

En plastique. Avec câbles inclus. 3 positions avec recul, démarreur sans contact.

REF	TERMINALES TERMINALS TERMINALI BORNES	POSICIONES POSITIONS POSIZIONE POSITIONS	
GS11159	6	3	1

GOLDENSHIP



LUBRICANTES Y PINTURAS | LUBRICANTS & PAINTS | LUBRIFICANTI E PITTURE | LUBRIFIANTS ET PEINTURES

PINTURA EN SPRAY | SPRAY PAINT | PITTURE SPRAY | PEINTURE EN SPRAY

Sprays de pintura con los colores originales para retoque de los motores fueraborda, interiores, intra-fueraborda y colas fueraborda más usuales. Capacidad: 400ml.

Spray paints with the original colors for maintenance and painting inboards and outboard marine engine as well as stern-drives units. Bottle: 400ml.

Vernice spray con i colori originali per ritocchi dei motori fuoribordo, entrobordo, entro-fuoribordo e i piedi. Capacità: 400ml.

Peinture en aérosol aux couleurs originales pour la retouche des moteurs hors-bord, in-bord et les embases les plus courantes. Capacité: 400 ml

REF		COLOR	COLOUR	COLORE	COULEUR
GS90019		Barniz transparente	Clear Varnish	Vernice trasparente	Vernis transparent
PS110410	Evinrude	Azul (1989)	Blue (1989)	Blu (1989)	Bleu (1989)
GS90037	Evinrude	Azul XP	Blue XP	Blu XP	XP bleu
PS111139	Honda	Gris Beige (1991)	Grey (1991)	Grigio-Beige (1991)	Gris Beige (1991)
GS90038	Honda	Gris metalizado	Grey Metal	Grigio metallizzato	Gris métallisé
GS90023	Honda	Plata met.	Silver Metal	Argento metallizzato	Argent métallisé
GS90030	Johnson	Blanco (1972-90) - (1993+)	White (1972-90) - (1993+)	Bianco (1972-90) - (1993+)	Blanc (1972-90) - (1993+)
GS90026	Johnson	Blanco (1981-83)	White (1981-83)	Bianco (1981-83)	Blanc (1981-83)
GS90039	Johnson	Plata metalizado	Silver Metal	Argento metallizzato	Argent métallisé
GS90040	Mariner	Gris	Grey	Grigio	Gris
GS90002	Mercury	Negro	Black	Nero	Noir
GS90049	Parsun	Negro	Black	Nero	Noir
GS90032	Suzuki	Plateado (1983-89)	Silver (1983-89)	Argento (1983-89)	Argent (1983-89)
GS90025	Suzuki	Gris metalizado	Grey Metal	Grigio metallizzato	Gris métallisé
GS90042	Suzuki	Negro metalizado	Black Metal	Nero Metallizzato	Noir métallisé
GS90024	Tohatsu	Gris Metal (1991)	Grey Metal (1991)	Grigio Metallizzato (1991)	Gris métallisé (1991)
GS90027	Tohatsu	Azul Cobalto (1988-90)	Blue Cobalt (1988-90)	Blu Cobalto (1988-90)	Bleu cobalt (1988-90)
GS90043	Tohatsu	Azul	Blue	Blu	Bleu
PS114694	Yamaha	Azul Metal (1974)	Blue Metal (1974)	Blu Metallizzato (1974)	Bleu métal (1974)
GS90021	Yamaha	Azul (1984+)	Blue (1984+)	Blu (1984+)	Bleu (1984+)
GS90020	Yamaha	Azul Origen	Blue Origin	Blue Origen	Bleu Origine
GS90022	Yamaha	Gris Metal (1994)	Grey Metal (1994)	Grigio Metallizzato (1994)	Gris métallisé (1994)
PS110485	Yamaha	Gris Capot (1994)	Grey Capot (1994)	Grigio Capot (1994)	Gris capot (1994)



GOLDENSHIP

PROTECTOR DE MOTOR | ENGINE PROTECTOR | PROTETTORE MOTORE | PROTECTION DU MOTEUR

Producto a base de aceites y grasas que protege del óxido y la corrosión las superficies exteriores y partes eléctricas de los motores durante el invernaje. Evita la formación de agarrotamientos debido a la presencia de salitre. Facilita el arranque eliminando los residuos de agua y humedad.
Se elimina facilmente.

Oil & grease made, protects from rust & corrosion external engine surface during winter storage. Removes salt deposit and loosens rusted parts.
Easy to remove.

Prodotto a base di olio e grasso che protegge dall'ossidazione e dalla corrosione le superfici esterne e parti elettriche dei motori durante l'invernaggio. Evita la formazione dell'ossidazione dovuta alla presenza del salmastro. Facilita l'accensione eliminando i residui di acqua e umidità.
Si elimina facilmente.

Produit à base d'huiles et de graisses qui protège les surfaces extérieures et les parties électriques des moteurs de la rouille et de la corrosion pendant l'hivernage. Il empêche la formation de crises dues à la présence de salpêtre. Il facilite le démarrage en éliminant les résidus d'eau et d'humidité.
Il s'enlève facilement.

REF	
GS90090	500 ml



GOLDENSHIP

PROTECTOR DIELÉCTRICO | DIELECTRIC PROTECTOR | PROTETTORE DIELETTRICO | PROTECTEUR DIÉLECTRIQUE

Protector dieléctrico antihumedad para uso marino.
Protege de la humedad y oxidación todos las partes eléctricas y mecánicas de los motores marinos. Ideal para invernaje de motores y mantenimiento de temporada.

Prevents humidity and corrosion of all electric and mechanical parts in marine engines. Specially indicate for winter storages and maintenance in the season.

Protettore dielettrico antiumidità per uso marino. Protegge dalla umidità e dall'ossidazione tutte le parti elettriche e meccaniche dei motori marini.
Ideale per invernaggio dei motori e manutenzione di lunga durata.

Protecteur diélectrique anti-humidité pour usage marin. Protège toutes les pièces électriques et mécaniques des moteurs marins contre l'humidité et l'oxydation.
Idéal pour l'hivernage des moteurs et l'entretien saisonnier.

REF	
GS90092	400 ml



GOLDENSHIP

DESCALCIFICADOR DE MOTOR / DESCALING ENGINE FLUSH / DECALCIFICANTE MOTORE / DÉTARTRANT MOTEUR

Limpiador para eliminar las incrustaciones, algas, y suciedad en los motores marinos.
No daña las juntas ni impulsores de goma.

Removes scale, zebra mussels, general marine growth and vegetation rom all marine engines.

Pulitore per eliminare le incrostazioni, alghe, e sporcizia nei motori marini.
Non danneggia guarnizioni e giranti in gomma.

Nettoyant pour éliminer le tartre, les algues et la saleté dans les moteurs marins.
N'endommage pas les joints ou les turbines en caoutchouc.

REF	
STA92600	3,8 L

Star brite



LIMPIADOR CARBURADOR Y STARTER / CARBURATOR & CHOKE CLEANER / PULITORE CARBURATORE / NETTOYANT CARBURATEUR

Aerosol para motores de 2 y 4 tiempos.
Para limpieza del carburador y de los componentes internos del motor. Asegura arranques fáciles y ralentí suave.
Despega los aros de los pistones.
Restablece la potencia del motor.

Spray for all 2 and 4 cycle engines.
Marine motor de-carb. Dissolves gum, varnish dirt and carbon deposits.Restore power & performance. Reduce fuel consumption.

Aerosol per motori di 2 e 4 tempi.
Per la pulizia del carburatore e dei componenti interni del motore.
Assicura partenze più facili e un minimo stabile. Lubrifica le fasce dei pistoni. Ristabilizza la potenza del motore.

Spray pour moteurs 2 et 4 temps.
Pour nettoyer le carburateur et les composants internes du moteur. Assure des démarrages faciles et un ralenti en douceur.
Décolle les segments du piston.
Restaure la puissance du moteur.

REF	
GEGC15	354 g

GOLD EAGLE



ACEITE DE INVERNAJE / FOGGING OIL / OLIO INVERNAGGIO / FOGGING OIL

Para inyectar en los carburadores de motores a 2 y 4 tiempos.
Protege las paredes de los cilindros, aros de pistones y otras superficies de la cámara de combustión durante los periodos de invernaje, facilitando el arranque del motor después de éste periodo.

Prevents corrosion when storing inboard or outboard engines for a extended period of time. Special formula makes starting engine after storage quick and easy.

Da inserire nei carburatori dei motori da 2 e 4 tempi.
Protegge le pareti dei cilindri, le fasce dei pistoni e altre superfici della camera di combustione durante il periodo di invernaggio, facilitando la partenza del motore dopo questo periodo.

Pour injecter dans les carburateurs des moteurs 2 et 4 temps.
Il protège les parois des cylindres, segments et autres surfaces de la chambre de combustion pendant les périodes d'hivernage, facilitant le démarrage du moteur après cette période.

REF	
STA84800	3,8 L
GE22001	340 g

RECmar®

GE22001





STA84800

ADITIVO GASOLINA / GASOLINE ADDITIVE / ADDITIVO BENZINA / ADDITIF ESSENCE

Elimina y previene los problemas del ethanol. Reduce todas las emisiones contaminantes.
Estabiliza la química del combustible durante 1 año.
Reduce el mantenimiento del sistema de combustible. Elimina la producción de carbonilla.
Reduce el consumo de combustible.

Eliminates and prevents ethanol fuel problems. Reduces all emisions. Prevents fuel oxidation and stabilizes fuel chemistry for at least 1 year.
Lower fuel system maintenance.
Eliminates carbon build-up.
Increases fuel economy.

Elimina e previene i problemi dell'etanolo. Riduce tutte le emissioni contaminanti.
Stabilizza la chimica del combustibile durante 1 anno.
Elimina la produzione di residui carboniosi. Riduce il consumo del combustibile.

Élimine et prévient les problèmes d'éthanol. Réduise toutes les émissions polluantes. Stabilise la chimie du carburant pendant 1 an.
Réduit l'entretien du système de carburant. Elimine la production de charbon.
Réduis la consommation de carburant.

REF		PARA TRATAR HASTA TREAT UP TRATTARE FINO A POUR TRAITER JUSQU'À
STA93008	237 ml	475 L
STA93016	473 ml	950 L

Star brite STAR TRON



ESTABILIZADOR DE GASOLINA | FUEL STABILIZER | STABILIZZATORE BENZINA | STABILISATEUR D'ESSENCE

Elimina el agua, limpia los carburadores e inyectores. Contiene antioxidantes para prevenir el óxido y la corrosión. No requiere vaciar el depósito para el invernaje y mantiene el combustible fresco para un rápido y fácil arranque.

Keeps fuel fresh and allows for easier starts after periods of storage. Removes water, cleans carburetors and fuel injectors. Contains antioxidant to prevent rust and corrosion.

Elimina l'acqua, pulisce i carburatori e iniettori. Contiene antiossidanti per prevenire l'ossidazione e la corrosione. Non è necessario svuotare il serbatoio per l'invernaggio e mantiene il carburante fresco per una rapida e facile partenza.

Élimine l'eau, nettoie les carburateurs et les injecteurs. Contient des antioxydants pour empêcher la rouille et la corrosion. Il ne nécessite pas de vider le réservoir pour l'hivernage et maintient le carburant frais pour un démarrage rapide et facile.

REF		PARA TRATAR HASTA TREAT UP TRATTARE FINO A POUR TRAITER JUSQU'À	
GE22207	475 ml	150 L	Gasolina | Gasoline | Benzina | Gasoline
GE22254	946 ml	1.200 L	Diesel

GOLD EAGLE



GE22207 GE22254

LIMPIADOR DEPÓSITOS | FUEL TANK CLEANER | PULITORE SERBATOIO | NETTOYANT RÉSERVOIR

Excepcionalmente efectivo en la limpieza de lodos y algas en depósitos de gasolina o diesel. Retrasa la formación de nuevas algas que puedan contaminar el combustible. Nuevo y revolucionario aditivo que reemplaza los costosos sistemas de limpieza de los depósitos de combustible.

Exceptionally effective at cleaning sludge and algae from gasoline and diesel tanks. Slows the recurrence of new algae that can contaminate fuel. A revolutionary new additive that replaces expensive fuel polishing and tank cleaning.

Eccezionale efficacia nella pulizia dal fango e alghe nel serbatoio benzina o diesel. Ritarda la formazione di nuove alghe che possono contaminare il combustibile. Nuovo e rivoluzionario additivo che rimpiazza i costosi sistemi di pulizia dei serbatoi del combustibile.

Exceptionnellement efficace pour nettoyer les boues et les algues dans les réservoirs d'essence ou de diesel. Il retarde la formation de nouvelles algues qui peuvent contaminer le carburant. Nouvel additif révolutionnaire qui remplace les systèmes coûteux de nettoyage des réservoirs de carburant.

REF		PARA TRATAR HASTA TREAT UP TRATTARE FINO A POUR TRAITER JUSQU'À
STA93664	1,9 L	950 L
STA93116	473 ml	1.900 L

STAR BRITE STAR TRON



STA93116 STA93664

LUBRICANTE PARA 2 TIEMPOS | 2 STROKE LUBRICANT | LUBRIFICANTE PER 2 TEMPI | HUILE 2 TEMPS TC-W3

2 STROKES TC-W3

new

Especialmente formulado para motores marinos de 2 tiempos. Inhibidor de corrosión y herrumbre. Gran capacidad de limpieza de las partes internas del motor (pistón, bujías...), evita el pegado de segmentos y la formación de depósitos. Alta fluidez a bajas temperaturas.

Specially formulated for 2-stroke marine engines. Excellent anti-wear protection for the internal parts of the engine. When the engine is not in use, it effectively protects from corrosion and rust. Very effective in maintaining the internal parts of the engine (pistons, spark plugs, etc.) clean, avoiding piston rings from sticking and sediments accumulating.

Formulazione specificamente studiata per motori marino a 2 tempi. Eccellente protezione contro l'usura dei componenti interni del motore. Garantisce un'alta protezione contro la corrosione e la ruggine. Contribuisce a mantenere pulite le parti interne del motore (pistone, candela, ecc.), evita l'aderenza delle fasce del pistone e la formazione di depositi. Alta fluidità a basse temperature.

Spécialement conçu pour des moteurs 2 temps, Elle vous offre une excellente protection face à l'usure des éléments internes du moteur et une haute protection contre la corrosion et la rouille. Elle a une haute fluidité à basses températures. Notamment applicable dans des conditions climatiques très froides.

QUALITY LEVELS
NMMA TC-W3
(NMMA, National Marine Manufacturers Association)

REF		
REC2TU6	1 L	6
REC2TU3	5 L	3

RECLUBE



ACEITE MEZCLA 2 TIEMPOS — 2 CYCLE OIL S — OLIO MISCELA 2 TEMPI — HUILE 2 TEMPS

REF	R.O. OEM			
RM92-858026QB1U6	92-858026QB1	1 L	6	PREMIUM PLUS
RM92-858027QB1U3	92-858027QB1	3,8 L	3	PREMIUM PLUS
RM92-858037QB1U3	92-858037QB1	3,8 L	3	OPTIMAX /DFI



RM92-858026QB1U6



RM92-858027QB1U3



RM92-858037QB1U3

ACEITE MINERAL FUERABORDAS TC-W3

Utilize el TC-W3 para obtener mayor potencia en su motor. Provee de una mayor protección contra la carbonilla en los pistones, el resecamiento de los aros, el fallo de las bujías en el arranque y del óxido. Recomendado para los sistemas de inyección de aceite.

2-CYCLE OIL TC-W3

Formulated from ultra-clean base stock oil to provide superior protection against piston scuffing, bearing wear, spark plug fouling, pre-ignition and rust. This formulation has outstanding lubricity and miscibility for better mixing of fuel and oil, resulting in a cleaner running engine. Contains no phosphorus. Recommended for oil injection systems. Outboard motor Oil.

OLIO MINERALE PER FUORIBORDO TC-W3

IUtilizare il TC-W3 per ottenere maggior potenza nel motore. Fornisce una maggiore protezione contro i residui di combustione nei pistoni, l'essicazione delle fasce, il non funzionamento delle candele nell'accensione. Raccomandato per i sistemi di iniezione ad olio.

HUILE MINÉRALE 2 TEMPS TC-W3

Utilisez la TC-W3 pour augmenter la puissance de votre moteur. Elle offre une meilleure protection contre le carbone dans les pistons, le séchage des segments, la défaillance des bougies d'allumage au démarrage et la rouille. Recommandé pour les systèmes d'injection d'huile.

REF	R.O. OEM		
LUB11591U12		1 L	12
RM92-858021QB1U6	92-858021QB1	1 L	6
RM92-858022QB1U3	92-858022QB1	3,8 L	3
RM92-858023QB1U2	92-858023QB1	9,5 L	2



LUB11591U12



RM92-858021QB1U6



RM92-858022QB1U3



RM92-858023QB1U2

SAE 5W40

ACEITE 100% SINTÉTICO

Lubricante marino 100% sintético. Excelente fluidez en frío, facilita el arranque y reduce los desgastes de motor. Evita el pegado de segmentos al dispersar lodos, barnices y otros productos de oxidación a altas temperaturas. Contiene inhibidores antiherrumbre y anticorrosión.

100% SYNTHETIC OIL

100% synthetic lubricant designed for all types of 4T petrol engines. Good fluidity in cold temperatures facilitates performance and reduces engine wear. It avoids piston rings from sticking by clearing dirt, varnish and other oil oxidation deposits when subject to high temperatures. Contains effective anti-rust and anti-corrosion inhibitors that protect the engine in the marine environment.

OLIO 100% SINTETICO

Lubrificante 100% sintetico pensato per motori a benzina 4T di ogni tipo. Buona fluidità a freddo, facilita la messa in moto e riduce l'usura del motore. Evita l'aderenza delle fasce del pistone, disperdendo fanghi, lacche e altri prodotti derivanti dall'ossidazione dell'olio ad alte temperature. Contiene efficaci inibitori antiruggine e anticorrosione, per proteggere il motore in ambiente marino.

HUILE 100% SYNTHÉTIQUE

new

Lubrifiant 100% synthétique adapté à tout type de moteurs à essence 4T. Bonne fluidité à froid qui aide au démarrage et réduit la détérioration du moteur. Évite le colllage des segments lors de la dispersion de boue dans le moteur, vernis et autres produits oxydant l'huile à haute température. Contient des inhibiteurs de corrosion et antirouille.

QUALITY LEVELS
API SN/CF
ACEA A3/B3/B4
MB 229.3
VW 502.00/505.00
RN 710
OPEL A&B
JASO MA2

RECLUBE

REF		
REC5W40U6	1 L	6
REC5W40U3	5 L	3



Especialmente desarrollado para motores de alto rendimiento. Las propiedades especiales de este aceite le permiten lubricar el motor incluso durante el arranque a baja temperatura. El aceite combate la acumulación de lodo y brinda una excelente protección contra el desgaste. Especialmente adecuado para motores que están sujetos a arranques y paradas frecuentes.

Specially developed for high performance engines. The special properties of this oil allow it to lubricate the engine even during low temperature starting. The oil combats sludge buid-up and gives excellent protection against wear. Particularly suitable for engines that are subject to frequent starting and stopping.

Sviluppato appositamente per motori ad alte prestazioni. Le proprietà speciali di questo olio consentono di lubrificare il motore anche durante l'avviamento a bassa temperatura. L'olio combatte il fango accumulato e offre un'eccellente protezione contro l'usura. Particolarmente adatto per motori soggetti a frequenti avviamenti e arresti.

Spécialement développé pour les moteurs hautes performances. Les propriétés particulières de cette huile vous permettent de lubrifier le moteur même lors d'un démarrage à basse température. L'huile combat l'accumulation de boue et offre une excellente protection contre l'usure. Particulièrement adapté aux moteurs soumis à des démarrages et arrêts fréquents.

REF	R.O. OEM		
REC21363429	21363429	1 L	API SM
REC21363430	21363430	5 L	



REC21363429 REC21363430

SAE 10W30
SAE 10W40

REF	R.O. OEM		
RM92-8M0086220U6	92-8M0086220	1 L	6
RM92-8M0086221U3	92-8M0086221	4 L	3



RM92-8M0086220U6 RM92-8M0086221U3

ACEITE SINTÉTICO PREMIUM

Lubricante marino reforzado con bases sintéticas, para motores gasolina 4T fueraborda e intraborda. Especificaciones NMMA FC-W. HTHS elevado, asegura viscosidad a elevadas temperaturas. Anticorrosivo con antioxidantes incorporados, elevadas propiedades antiespumantes.

SYNTHETIC PREMIUM OIL

Marine lubricant strengthened with a synthetic base, especially formulated for outboard and inboard 4T petrol engines, with NMMA FC-W specifications. With a high HTHS, it ensures great viscosity at high temperatures.
Better anti-oxidant resistance.
Improved anti-foaming properties.

OLIO SINTETICO PREMIUM

Lubrificante marino potenziato con basi sintetiche, specificamente formulato per motori a benzina 4T fuoribordo ed entrobordo, a norma specifiche NMMA FC-W. Con indice HTHS più elevato, garantisce un'alta viscosità a temperature elevate.
Aumenta la protezione anticorrosione.
Maggior resistenza all'ossidazione.
Proprietà antischiuma migliorate.

HUILE SYNTHÉTIQUE PREMIUM

new

Lubrifiant marin renforcée avec des bases synthétiques, pour les moteurs à essence 4T hors-bord et inboard avec des spécifications NMMA FC-W. Avec des HTHS supérieures, qui vous assure une haute viscosité à des températures élevés. Resistance antioxidante majeure. Propriétés anti-mousse améliorés.

QUALITY LEVELS:
NMMA FC-31015T
(NMMA, National Marine Manufacturers Association)
API SJ/SG

REF		
REC10W30U6	1 L	6
REC10W30U3	5 L	3

QUALITY LEVELS
NMMA FC-11815R
(NMMA, National Marine Manufacturers Association)
API SJ/SG

REF		
REC10W40U6	1 L	6
REC10W40U3	5 L	3



RECLUBE

SAE 15W40

MULTIGRADE HIGH PERFORMANCE

new

Lubricante multigrado marino, superior al nivel SHPD, especialmente formulado para motores marinos turboalimentados. Contiene inhibidores de corrosión, oxidación, herrumbre y antiespumantes. Capacidad detergente, reduce los depósitos en válvulas y pistones. Excelentes cualidades dispersantes antilodos.

Marine multigrade oil, exceeds the SHPD performance level, especially formulated to meet the demanding requirements of 4-stroke diesel turbocharged engine manufacturers in the marine environment. Contains effective corrosion, oxidation, rust and foam inhibitors. Excellent detergent effect that reduces sediments in valves and pistons. Very good dispersion qualities that prevent sludge in cold temperatures.

Olio marino multigrado, con prestazioni oltre il livello SHPD, specificamente formulato per soddisfare le particolari esigenze dei motori diesel a 4 tempi turboalimentati in ambiente marino. Contiene efficaci inibitori contro corrosione, ossidazione, ruggini e formazione di schiuma. Eccelente capacità detergente, riduce i depositi in valvole e pistoni. Ottime qualità disperdenti che impediscono la formazione di fanghi a freddo.

Huile multigrade marine, dépasse les niveaux de performances SHPD, spécialement conçu pour les moteurs diesel 4T avec turbo. Contient des inhibiteurs contre la corrosion, l'oxydation, antirouille et anti-mousse. Évite les dommages dans les chemises, habituel sur les moteurs suralimentés de haute puissance. Haute qualité dispersante pour empêcher l'apparition de boue dans le moteur.

QUALITY LEVELS
API CI-4/SL
ACEA E7
Caterpillar ECF-1[a]
Cummins CES 20071/72/76/77/78
MACK EO-M+
MAN M3275
MB 228.3
MTU Level 2
Renault RLD/RLD-2
Volvo VDS-2 VDS-3

REF		
REC15W40U3	5 L	3



ACEITE MINERALES VDS-3 | VDS-3 MINERAL GEAR OILS | OLIO MINERALE VDS-3 | HUILE MINÉRALE VDS-3

VDS-3 cubre los requisitos más estrictos sobre la limpieza del pistón en comparación con VDS-2, lo que garantiza la durabilidad y fiabilidad de los motores. La alta calidad del aceite VDS-3 permite un aumento en los intervalos de drenaje. Para motores diesel y de gasolina (ver manuales de los operadores).

VDS-3 covers even more stringent requirements on piston cleanliness and bore polish compared to VDS-2, ensuring the durability and reliability of the engines. The high quality of VDS-3 oil allows in certain cases an increase in drain intervals. Fits both diesel and gas engines (check operators manuals).

VDS-3 copre requisiti ancora più stringenti sulla pulizia del pistone e sulla lucidatura del foro rispetto a VDS-2, garantendo la durata e l'affidabilità dei motori. L'alta qualità dell'olio VDS-3 consente un aumento degli intervalli di scarico. Adatto sia ai motori diesel che a quelli a gas (consultare i manuali degli operatori).

Le VDS-3 couvre les exigences les plus strictes en matière de nettoyage des pistons par rapport au VDS-2, ce qui garantit la durabilité et la fiabilité des moteurs. La haute qualité de l'huile VDS-3 permet une augmentation des intervalles de vidange. Pour les moteurs diesel et essence (voir les manuels d'utilisation).

REF	R.O. OEM		
REC22479638	22479638	1 L	API CI-4
REC22479642	22479642	5 L	ACEA E5



REC22479638

REC22479642

ACEITE MOTORES DIESEL | DIESEL ENGINES OIL | OLIO MOTORE DIESEL | HUILE MOTEUR DIESEL

REF	R.O. OEM		
RM92-8M0096794U3	92-8M0096794	3,8 L	3



SAE 25W40

ACEITE SEMISINTÉTICO 4T

Lubricante semisintético para motores con cargas y RPM elevadas. Excelentes inhibidores de corrosión, oxidación y desgaste. Buenas propiedades de arranque en frío, antiespumantes incorporados.

4 STROKES SEMI-SYNTHETIC OIL

Semi-synthetic oil for 4-stroke engines suitable for engines with high RPM and heavy loads. Lubrication of all engine components, great anti-corrosion, anti-oxidation and anti-wear properties. Good performance in cold conditions. Keeps the engine clean and increases protection against corrosion in saline water environments.

OLIO SEMISINTETICO 4 TEMPI

Olio semisintetico per motori a 4 tempi, adatto a motori con elevati RPM e carichi pesanti. Lubrificazione di tutti i componenti del motore, elevate proprietà anticorrosione, antiossidazione e antiusura. Buone proprietà di avvio a freddo.

HUILE SEMI-SYNTHÉTIQUE 4T

new

Huile semi-synthétique pour des moteurs 4T adapté aux moteurs avec des hauts RPM. Grande capacité anti-corrosion, anti-oxydation et contre l'usure. Propriétés adéquates pour un démarrage à froid. Elle maintient la propreté du moteur et augmente la protection face à la corrosion du à l' environnement salin.



QUALITY LEVELS
NMMA FC13101T
(NMMA, National Marine Manufacturers Association)
API SJ/SG

REF		
REC25W40U3	5 L	3

RECLUBE

ACEITE SINTÉTICO PARA MOTORES VERADO / SYNTHETIC OIL FOR VERADO ENGINES / OLIO SINTETICO PER MOTORI VERADO / HUILE SYNTHÉTIQUE POUR VERADO

REF	R.O. OEM		
RM92-8M0086227U3	92-8M0086227	4 L	3



ACEITE MOTORES GASOLINA / GASOLINE ENGINES OIL / OLIO MOTORE BENZINA / HUILE MOTEUR ESSENCE

REF	R.O. OEM		
RM92-8M0086224U3	92-8M0086224	3,8 L	3



ACEITE SINTÉTICO TRASMISIONES / SYNTHETIC DRIVES OIL / OLIO SINTETICO PER TRASMISSIONE / HUILE SYNTHÉTIQUE POUR EMBASES

Aceite sintético de altas prestaciones.
Para colas de transmisión mecánica.

High performance synthetic Lower Unit Gear Lube for mechanical drives.

Olio sintetico di alte prestazioni.
Per piedi poppieri a trasmissione meccanica.

Huile synthétique haute performance.
Pour les embases mécanique.

REF	R.O. OEM		
RM92-858064QB1U6	92-858064QB1	1 L	6
RM92-858065QB1U2	92-858065QB1	9,5 L	2



RM92-858064QB1U6



RM92-858065QB1U2

RECAMBIOS MARINOS

new

Lubricante marino para transmisones de motores intraborda y fueraborda de los principales fabricantes, que requieren aceites con una calidad API GL 5. Consulte el manual de usuario antes de elegir el lubricante.

GL-5 synthetic oil of the highest quality for marine drives and IPS Oil recommended for the transmission of inboard and outboard engines of the main manufacturers that require API GL 5 quality oils. Read the user manual before choosing a lubricant.

Olio sintetico GL-5 di altissima qualità per s-drive, trasmissioni IPS e riduttori. Olio consigliato per trasmissioni entrobordo e fuoribordo dai principali produttori che richiedono oli di qualità API GL 5. Consultare il manuale d'uso prima di scegliere il lubrificante.

Huile Synthétique recommandé par les principaux fabricants conçu pour des transmissions de moteur inboard et hors-bord qui précisent d'une qualité API GL 5. N'hésitez pas à consulter le manuel d'utilisation avant de choisir votre lubrifiant



QUALITY LEVELS
API GL-5

REF	1 L	6
REC80W90U6		
REC80W90U3	5 L	3

RECLUBE

ACEITES SINTÉTICOS

Aceite sintético de alta calidad. Para colas de transmisión mecánica. Especialmente indicados para los motores de gran cilindrada o de uso frecuente. Reduce el grado de fricción y calentamiento. No se mezcla con el agua. No anula las garantías de los fabricantes.

REF		
LUB11564U12	1 L	12
LUB11565	19 L	1

LubriMatic

SYNTHETIC OILS

Lower Unit Gear Lube for mechanical drives. A synthetic gear lube that protects high-performance lower units in extreme operating conditions. Highly recommended for all engines over 100 hp.
Will not avoid manufacturers' warranties.

OLIO SINTETICO

Olio sintetico di alta qualità. Per trasmissione meccanica. Indicato specialmente per motori di grande cilindrara o di uso frequente. Riduce il grado di attrito e riscaldamento. Non si mescola con l'acqua.
Non annulla la garanzia del produttore.

HUILES SYNTHÉTIQUES

Huile synthétique de haute qualité. Pour les embases mécanique. Particulièrement adapté pour les moteurs de grande cylindrée ou à usage fréquent. Réduit le degré de friction et d'échauffement. Elle ne se mélange pas à l'eau. N'annule pas les garanties du fabricant.



LUB11564U12 LUB11565

ACEITE MINERALES

Para colas de transmisión mecánica. Especialmente indicados para los motores de gran cilindrada o de uso frecuente.
Fabricado con aditivos especiales para proveer una máxima durabilidad e inhibidores de la corrosión para una mayor protección contra el óxido y la corrosión.

REF		
LUB11540U12	280 g	12
LUB11552U12	1 L	12
LUB11546	19 L	1

LubriMatic

MINERAL GEAR OILS

Lower Unit Gear Lube for mechanical drives. Lower Unit Gear Lube. Ideal for modern outboard and stern drive lower units.
Will not avoid manufacturers' warranties.

OLIO MINERALE

Per piedi poppieri a trasmissione meccanica. Indicato specialmente per motori di grande cilindrata o di uso frequente.
Fabbricato con additivi speciali per fornire una massima durata e impedire la corrosione per una maggiore protezione contro l'ossidazione e la corrosione.

HUILE MINÉRALE

Pour les embases mécanique. Particulièrement adapté pour les moteurs de grande cylindrée ou à usage fréquent.
Fabriqué avec des additifs spéciaux pour offrir une durabilité maximale et des inhibiteurs de corrosion pour une meilleure protection contre la rouille et la corrosion.



LUB11540U12 LUB11552U12



LUB11546

RECAMBIOS MARINOS

KIT ACEITE COLAS

Kit para cambiar el aceite mineral de las colas OMC, Volvo, Mercruiser, Mercury y Mariner.

REF	
LUB11101	385 g

LubriMatic

LOWER UNIT LUBE KIT

Includes 2 tubes of high-viscosity lower unit gear lube.
For OMC, Volvo, Mercruiser, Mercury & Mariner drives.

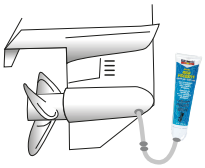

KIT OLIO PIEDI

Kit per cambiare l'olio minerale dei piedi poppieri OMC, Volvo, Mercruiser, Mercury e Mariner.

KIT D'HUILE D'EMBASE

Kit pour changer l'huile minérale des embases OMC, Volvo, Mercruiser, Mercury et Mariner etc...



GRASA MARINA. INSOLUBLE AL AGUA

Grasa marina semisintética con base de litio-calcio, de cuerpo espeso y color azul.
100% insoluble al agua, especialmente formulada para todo tipo de aplicaciones náuticas incluso prensaestopas y hélices plegables, gracias a la buena adhesión al metal.

MARINE GREASE. NON-WATER-SOLUBLE

Semi-synthetic marine grease with a lithium and calcium base, thick and blue.
100% non-water-soluble, especially formulated for all nautical uses, including cable glands and foldable propellers, thanks to good adherence to metal.

GRASSO MARINO. INSOLUBILE IN ACQUA

Grasso marino semisintetico a base di litio-calcio, di aspetto denso e di colore azzurro. 100% insolubile in acqua, specificamente formulato per applicazioni nautiche di tutti i tipi, compresi premistoppa ed eliche pieghevoli, grazie all'alta aderenza ai metalli.

GRAISSE MARINE INSOLUBLE A L'EAU

Graisse marine semi-synthétique à base de lithium-calcium, épais et bleu. 100% insoluble avec l'eau, spécialement conçu pour tout type d'application nautiques, même pour des presse-étoupes et les hélices pliables grâce à sa proprieté d'adhésion au métal.

new

REF		
RECGREU1	5 kg	1
RECGREU12	400 g	12

RECLUBE





Lubricante insoluble al agua, ideal para aplicaciones marinas. Excelente protección contra fricciones, óxido y corrosión.

Special calcium sulfonate complex, water insoluble formula ideal for marine applications.
Provides excellent corrosion protection under severe conditions caused by salt water and air.

Lubrificante insolubile all'acqua, ideale per applicazioni marine. Eccellente protezione contro l'attrito, l'ossido e la corrosione.

Lubrifiant insoluble dans l'eau, idéal pour les applications marines. Excellente protection contre le frottement, la rouille et la corrosion.

REF		PISTOLA GUN PISTOLA PISTOLET	
LUB11400	85g	RECT30190	4
LUB11402	400 g	RECT30201	1
LUB11406	280 g	LUB30197	1
LUB11407	13,5 kg		1
LUB11404	450 g		1

LubriMatic



LUB11400



LUB11402



LUB11406



LUB11407

LUB11404

GRASA DE LITIO / LITHIUM GREASE / GRASSO AL LITIO / GRAISSE AU LITHIUM

Grasa de litio con Teflón. Color blanco.

Heavy duty white litium grease with Teflon.

Grasso al litio con Teflón. Colore bianco.

Graisse au lithium avec téflon. Couleur blanche.

REF	
LUB11363	350 ml



ACEITE TRIM / TILT / POWER TRIM & TILT FLUID / OLIO TRIM / TILT / HUILE DE TRIM/TILT

Proporciona la viscosidad y lubricación necesaria para asegurar el perfecto funcionamiento de la bomba alargando la vida de los retenes y juntas.

Formulated to provide viscosity and lubricity necessary to ensure proper pump performance and seal life.

Fornisce la viscosità e la lubrificazione necessaria per assicurare il perfetto funzionamento della pompa allungando la vita delle guarnizioni.

Elle fournit la viscosité et la lubrification nécessaires pour assurer le fonctionnement parfait de la pompe, prolonge la durée de vie des joints.joits.

REF		
LUB11578U12	280 g	12



ACCESORIOS Y HERRAMIENTAS DE INSTALACIÓN / ACCESSORIES AND INSTALATION TOOLS / ACCESSORI E ATTREZZI ISTALAZIONE / ACCESSOIRES ET OUTILS D'INSTALLATION

KIT PISTOLA + GRASA / MIDGET GREASE GUN KIT / KIT PISTOLA + GRASSO / KIT PISTOLET + GRAISSE

Kit compuesto de una pistola pequeña y muy versátil que permite la salida del tubo conector frontal o superior. Presión máxima 300 k/cm². Incluye un bloqueador para mantener el cartucho en posición y tubo de salida de 14 cm. Admite cartuchos de 3 onzas (85 g) o grasa a granel.

Marine corrosion control lubrication kit. Small, versatile gun allows for front or top pipe placement. Barrel takes 3 oz grease cartridge or can be bulk loaded. Develops up to 4,500 psi.

Kit composto da una pistola piccola e molto versatile che permette l'uscita del grasso dal tubo frontale o superiore. Pressione massima 300 k/cm². Include un blocco per tenere la cartuccia in posizione, il tubo è da 14 cm. Utilizza cartuccia da 85 gr o grasso sfuso.

Kit composé d'un petit pistolet très polyvalent qui permet la sortie du tube de connexion avant ou supérieur. Pression maximale 300 k / cm2. Il comprend un bloqueur pour maintenir la cartouche en position et un tube de sortie de 14 cm. Prend en charge des cartouches de 3 oz (85 g) ou de la graisse en vrac.

REF
RECT30190



BOMBA DEPÓSITO / GREASECASE FILLER / POMPA OLIO / POMPE DE REMPLISSAGE

Para llenado de colas.
Con válvula de ventilación para evitar derrames.

With check valve venting system to avoid overflow

Per mettere l'olio nei piedi poppier.
Con valvola di sfiatto per evitare fuoriuscite.

Pour le remplissage des embases. Avec valve de ventilation pour éviter les déversements.

REF				
REC55133GF	Bomba depósito	Greasecase filler	Pompa olio	Pompe de remplissage
REC55133M	Adaptador métrico (excepto Suzuki)	Metric adaptor (excl. Suzuki)	Adattatore metrico (eccetto Suzuki)	Adaptateur métrique (sauf Suzuki)
REC55133S	Adaptador para Suzuki	Adaptor for Suzuki	Adattatore per Suzuki	Adaptateur Suzuki



REC55133M REC55133S



PISTOLA DE GRASA / LEVER GREASE GUN / PISTOLE GRASSO / POMPE A GRAISSE

Incluye manguera curvada y conector standard.
Ideal para engrasar crucetas, cables de dirección, cañas de motor fuerborda, piñones y cualquier otra parte del motor que precise engrase.
Con visor para reserva. Se recarga sin necesidad de tubo.

Standard Lever grease gun.
Includes curved pipe and std coupler.
Ideal for greasing spreaders, steering wires, rods outboard engine, gear bearing and other parts of the engine that needs greasing.
With Viewer for reservation.
Will reload without tube.

Include tubo flessibile curvo e connettore standard.
Ideale per ingrassare cavi dello sterzo, barre del motore fuorbordo, ingranaggi e qualsiasi altra parte del motore che abbia bisogno di lubrificazione.
Con visora per la prenotazione.
Si ricarica senza tubo.

Comprend un tuyau incurvé et un connecteur standard.
Idéal pour graisser les traverses, les câbles de direction, les tiges de moteur entraîné, les pignons et toute autre partie du moteur qui a besoin d'être graissée.
Avec viseur pour réservation. Il se recharge sans tube.

REF		
RECT30201	600 cc	16000 psi
LUB10212	Manguera 30 cm Hose 30 cm Tubo 30 cm Tuyau 30 cm	



LUB10212



RECT30201

Pistola para tubos de grasa. Incluye manguera flexible de 14 cm y adaptador standard.

All purpose gun operates handy squeeze tubes. Includes 2-11/16" pipe and plastic push-type coupler.

Pistola per tubi di grasso. Include tubo flessibile da 14 cm e adattatore standard.

Pistolet pour tubes de graisse. Comprend un tuyau flexible de 14 cm et un adaptateur standard.

REF
LUB30197



PISTOLA DE ACEITE / BOTTLE GREASE PUMP / PISTOLA OLIO / POMPE POUR HUILE

Pistola para acoplar en los envases de botella de 1 litro de LUB11552 y LUB11564. Se suministra con kit de adaptación con válvula anti-retorno.

Lower unit quart pump.
Complete with metal threaded filler fitting.

Pistola da accoppiare a bottiglie da 1 L LUB11552 e LUB11564. Si vende con kit di accoppiamento con valvola anti-ritorno.

Pompe pour les bidons de 1 litre de LUB11552 et LUB11564. Livré avec kit d'adaptation avec clapet anti-retour.

REF
REC55005



KI ENGRASADORES METRICOS

METRIC GREASE FITTINGS

KIT LUBRIFICATORI METRICI

KIT GRAISSEURS METRIQUES

REF	0º	45º	90º	
LUB11957	4	2	2	M6x1

REF	90º	
RECT11958	4	M6x1





OREJERAS REDONDAS

MOTOR FLUSHER ROUND

CUFFIE LAVAGGIO ROTONDE

OREILLES RONDES

Tomas de agua para refrigeración de motores fueraborda y colas intra-fueraborda.

For use on most outboards and inboard/outboards engines with side water inlets.

Cuffie lavaggio per motori entro-fuoribordo e fuoribordo.

Sorties d'eau pour le refroidissement du moteur hors-bord et in-bord.

GOLDENSHIP

REF	
GS30350	1



USO PROFESIONAL
PROFESSIONAL
USO PROFESSIONALE
USAGE PROFESSIONNEL

REF	
GS30351	1



OREJERAS CUADRADAS

MOTOR FLUSHER SQUARE

CUFFIE LAVAGGIO QUADRATE

OREILLES CARRÉES

Tomas de agua para refrigeración de motores fueraborda y colas intra-fueraborda.

For use on most outboards and inboard/outboards engines with side water inlets.

Cuffie lavaggio per motori entro-fuoribordo e fuoribordo.

Sorties d'eau pour le refroidissement du moteur hors-bord et in-bord.

GOLDENSHIP

REF	
GS30352	1



USO PROFESIONAL
PROFESSIONAL
USO PROFESSIONALE
USAGE PROFESSIONNEL

REF	
GS30353	1



EXTRACTOR IMPULSORES

IMPELLER REMOVAL

ESTRATTORE GIRANTE

EXTRACTEUR DE TURBINE

Extractor para impulsores flexibles de bombas, motores fueraborda e interiores.

Flexible impeller removal tool, suitable for all marine flexible impellers of water pumps, outboard and inboard engines.

Estrattore per giranti di pompe di motori fuoribordo e entrobordo.

Extracteur pour turbines flexibles, moteurs hors-bord et in-bord.

REF	
GS20198	Ø 65 mm 2-1/2"
GS20199	Ø 77 - 127 mm Ø 3" - 5"

GOLDENSHIP



EXTRACTOR COJINETES Y HÉLICES / PROP AND BEARING PULLER / ESTRATTORE CUSCINETTI E ELICHE / EXTRACTEUR DE ROULEMENT ET D'HELICE

Extractor de cojinetes y hélices, con patas. Para todos los cojinetes Mercruiser y la mayoría de las hélices.

Prop and bearing carrier puller. Capacity: 5 Tons (Min). For Mercruiser All Style Bearing Carrier and Most Props.

Estrattore cuscinetti e eliche. Per tutti i cuscinetti Mercruiser e la maggior parte delle eliche.

Extracteur de roulements et hélices. Pour tous les roulements Mercruiser et la plupart des hélices.

REF
REC90095

RECmar



Para hélices y cojinetes antiguos
For prop and old style bearing carrier.
Per eliche e cuscinetti vecchi.
Pour hélices et roulements anciens



Para cojinetes modernos
For new style bearing carrier.
Per cuscinetti moderni.
Pour roulements modernes



FONENDOSCOPIO / SPARK GAP TESTER / FONENDOSCOPIO / PHONENDOSCOPE

Instrumento de precisión, resistente a golpes, detecta fácilmente ruidos en motores, cojinetes y otras partes móbiles. Incluye varilla de test, trompeta y auriculares.

Sensitive, shockproof instrument, easily locates noises in engines bearings and other moving parts. Includes aluminium alloy probe / needle, surgical PVC, rubber trumpet and plastic earphones.

Strumento di precisione, resistente a colpi, rileva facilmente rumori nel motore, nei cuscinetti e altre parti mobili. Include la tromba e gli auricolari.

Instrument de précision, résistant aux chocs, détecte facilement le bruit dans les moteurs, roulements et autres pièces mobiles. Comprend une tige d'essai, une trompette et des écouteurs.

REF
REC91-00003

RECmar



EXTRACTOR PIÑONES Y COJINETES / UNIVERSAL PULLER PLATE / ESTRATTORE PIGNONE E CUSCINETTI / EXTRACTEUR DE PIGNON ET PALIER

REF	PIÑONES BEARINGS PIGNONE PIGNON
REC91-00001	30-50 mm / 1 1/4" ~ 2 1/4"
REC91-00002	50-75 mm / 2 1/4" ~ 3 1/2"
REC91-37241	75-105 mm / 3" ~ 4 1/2"

RECmar



LLAVE DINAMOMÉTRICA / TORQUE WRENCH / CHIAVE DINAMOMETRICA / CLÉ DYNAMOMÉTRIQUE

Con escala en:
20-150 pie/lb y 33.9 - 210 N.m
Incrementos cada 1 pie/lb y 1,4 N.m
Dado de conexión: 1/2"

Scale in:
20-150 ft-lbs. 33.9 - 210 N.m
Increases each 1 ft-lbs. & 1,4 N.m
1/2" drive.

Con scala da:
20-150 piedi/lb e 33.9 - 210 N.m
Incremento di 1 pie/lb e 1,4 N.m
Dado attacco: 1/2"

Avec échelle à:
20-150 pieds/livres et 33,9 - 210 N.m
Incrémente tous les 1 pied/livre et 1,4 N.m
Embout de connexion: 1/2 "

REF	
CRA944595	518 x 35 x40 mm



LLAVE FRENO VOLANTE PARA FUERABORDAS / FLYWHEEL HOLDER PER OUTBOARDS / CHIAVE FRENO VOLANTE PER FUORIBORDO / CLÉ FREIN DE VOLANT POUR HORS-BORD

REF
REC5515100

RECmar



CHISPÓMETRO / SPARK GAP TESTER / SCINTILLOMETRO / CONTRÔLEUR D'ALLUMAGE

Se puede comprobar la chispa con el motor en funcionamiento.

Good for checking spark on running engine.

Si può provare la scintilla con il motore in funzione.

L'étincelle peut être vérifiée avec le moteur en marche.

REF	CYL
REC5119766	8
REC004	1

RECmar

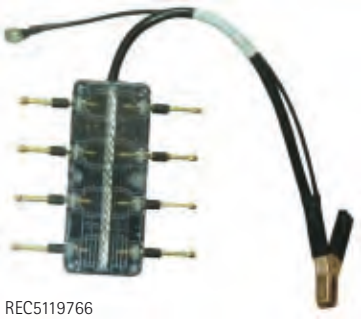

REC5119766



REC004

KIT EXTRACTOR DE POLEAS / PULLER TOOL KIT / KIT ESTRATTORE PULEGGE / KIT EXTRACTEUR DE POULIE

Extractor de polea contrapesos.
Contiene 5 juegos de tornillos de diferentes medidas.

Harmonic ballancer puller.
5 sets of screws are provided.

Estrattore di pulegge.
Contiene 5 kit di viti di differenti misure.

Extracteur de poulie.
Il contient 5 jeux de vis de différentes tailles.

REF
SSP4600

RECmar





Kit para extraer e instalar poleas.
Para uso en todos los motores Ford, GM y Chrysler.
También puede utilizarse para volantes de dirección y poleas en general.
Esfuerzo máximo recomendado: 20 kg.

Harmonic ballancer puller and installation tool kit. Use on all Ford, GM & Chrysler engines.
Heavy duty tool.
Can also be used for steering wheels and pulleys

Kit per estrarre e installare pulegge in tutti i motori Ford, GM e Chrysler.
Si può utilizzare per volani di direzione e pulegge in generale.
Carico massimo: 20 kg.

Kit pour extraire et installer les poulies.
A utiliser sur tous les moteurs Ford, GM et Chrysler.
Il peut également être utilisé pour les volants et les poulies en général.
Effort maximal recommandé: 20 kg.

REF
SSPHBP100K

RECmar





EXTRACTOR FILTROS / OIL FILTER WRENCH / ESTRATTORE FILTRI / CLÉ À FILTRE

REF	PARA FILTROS FILTERS PER FILTRI POUR FILTRES
REC70720	65 - 110 mm

RECmar

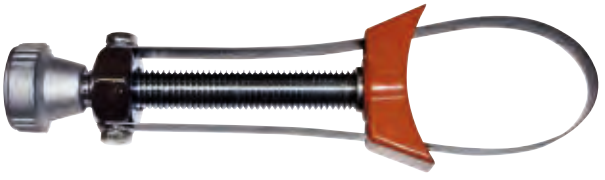

KIT LLAVE HÉLICE / PROP WRENCH KIT / KIT CHIAVE ELICHA / KIT CLÉ À HÉLICE

REF	R.O. OEM	
REC91-859046Q4	MC 91-859046Q4 HONDA 89-89206-ZW7-000AH	Mercury Mariner Force V4 & V6 Mercruiser Honda BF75-BF130

RECmar



JUEGO DE MACHOS / TAP AND DIE SET / FILIERA / KIT TARAUDS ET FILIÈRES

Garantía de por vida. / Lifetime warranty. / Garantita a vita. / Garantie à vie

REF	
CRA952343	Pulgadas Inches Pollici Pouce
CRA952344	Métricos Metrical Metrico Métrique



EXTRACTOR TAPONES DE TRIM / TRIM PLUGS EXTRACTOR / ESTRATTORE PER TAPPI DI TRIM / EXTRACTEUR DE BOUCHON DE TRIM

new

REF	
RECTOOLTRIMKIT	RECTOOLTRIM1 + RECTOOLTRIM2 + RECTOOLTRIM 3



REF	ÚTIL TOOL ATTREZZO UTILE				(A)
RECTOOLTRIM1	1/2"	+ RECPIN4	+ RECPIN4.5		38 mm
RECTOOLTRIM2	1/2"	+ RECPIN4	+ RECPIN4.5		32 mm
RECTOOLTRIM3	1/2"	+ RECPIN6			35 mm

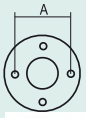



KITS DE RECAMBIO / SPARE KITS / KIT DI RICAMBIO / KITS DE RECHANGE



REF		PARA FOR PER POUR
RECPIN4	3 PIN x 4 mm	RECTOOLTRIM1 RECTOOLTRIM1
RECPIN4.5	3 PIN x 4.5 mm	RECTOOLTRIM1
RECPIN6	3 PIN x 6 mm	RECTOOLTRIM3

Los pines de repuesto no tienen garantía.
Replacement pins are not guaranteed.
I perni di ricambio non sono garantiti.
Les broches de remplacement ne sont pas garanties.

TRIM PISTON	TILT PISTON		HP	
RECTOOLTRIM1		Yamaha	F25 - F40	
RECTOOLTRIM2	RECTOOLTRIM3	Yamaha	F115	2000-14
RECTOOLTRIM2	RECTOOLTRIM3	Yamaha	F150	2004-10
RECTOOLTRIM2	RECTOOLTRIM1	Yamaha	F150	2011+
RECTOOLTRIM2	RECTOOLTRIM3	Yamaha	F175 - F200 (2.8L)	
RECTOOLTRIM1	RECTOOLTRIM1	Yamaha	F200 - F250 (3.3L)	
RECTOOLTRIM1	RECTOOLTRIM1	Yamaha	F225 - F300 (4.2L)	
RECTOOLTRIM2	RECTOOLTRIM3	Yamaha	F350	
RECTOOLTRIM2		Yamaha	F425	
RECTOOLTRIM2		Yamaha	55-90 (2-Strokes)	1994+
RECTOOLTRIM2	RECTOOLTRIM3	Yamaha	115-200 + VMAX	
RECTOOLTRIM1	RECTOOLTRIM1	Yamaha	225 (2-Strokes)	
RECTOOLTRIM2	RECTOOLTRIM3	Suzuki	DF115 - DF300	
RECTOOLTRIM2	RECTOOLTRIM3	Evinrude	115 - 300 ETEC	
RECTOOLTRIM3		Johnson Evinrude	25 - 50 (2 Strokes)	1994-04
RECTOOLTRIM2	RECTOOLTRIM3	Johnson Evinrude	60 - 250 (2 Strokes)	1982-06
RECTOOLTRIM2	RECTOOLTRIM3	Honda	75 - 225	1997+
RECTOOLTRIM1		Seastar Steering		
RECTOOLTRIM2		Volvo Penta Trim Cylinders		
RECTOOLTRIM1		Mercruiser Alpha One & Bravo Trim Cylinders		

JUEGO DE LLAVES / MECHANICAL TOOL SET / CASSETTA ATTREZZI / MALETTE D'OUTILLAGE

154 llaves en métrico y en pulgadas para un completo trabajo en motores. Garantía de por vida.

154 pcs. Mechanics tool set in metric & inches. Lifetime warranty.

154 chiavi metriche e in pollici per un lavoro completo nel motore.Garantita a vita.

154 clés, métriques et en pouces pour un travail complet sur le moteur. Garantie à vie

REF
CRA935154



HERRAMIENTA AROS-PISTONES

Kit herramientas para la instalación de aros y pistones. Incluye 6 bandas de 7 a 11 cm.

REF
SSP4213

RECmar®

RING COMPRESOR KIT

Ring compressor kit for pistons. Includes 6 band 2-7/8" - 4-3/8"

KIT FASCE-PISTONI

Kit per montare le fasce dei pistoni. Include 6 bande da 7 a 11 cm.

OUTIL SEGMENTS ET PISTONS

Kit d'outils pour l'installation des segments et pistons. Il comprend 6 colliers de 7 à 11 cm.



REF	PARA AROS Y PISTONES RING COMPRESSOR PISTONS PER FASCE E PISTONI POUR SEGMENTS ET PISTONS
SSP4206	127 mm Ø / 2-1/8" - 5" Ø
SSP4207	178 mm Ø / 3-1/2" - 7" Ø

RECmar®



KIT ALARGADOR CABLE BUJIAS

REF		
REC5119902	18 cm	4
REC5119903	60 cm	4

RECmar®

EXTENSION WIRES

KIT PROLUNGA CAVI CANDELE

KIT EXTENSION DE FAISCEAU DE BOUGIE



REC5119902



REC5119903

PULIDORA DE CILINDROS

Para pulir los cilindros de los bloques. Garantizada de por vida.

REF
CRA904633

ENGINE CYLINDER HONE

Quikly removes the glaze from engine cylinder walls before installing new piston rings. Lifetime warranty.

PULITRICE CILINDRI

Per pulire i cilindri dei blocchi. Garantita a vita.

RODOIR DE CYLINDRE

Poli les cylindres des blocs moteur. Garanti à vie.



KIT DE 3 PIEDRAS PARA RECAMBIO DE LA PULIDORA
3 PIECES SPARE PART FOR HONE
KIT DA 3 SPAZZOLE DI RICAMBIO PER LA PULITRICE
KIT DE 3 PIERRES DE REMPLACEMENT POUR LE RODOIR

REF
CRA946331



VACUÓMETRO DOBLE FUNCIÓN / PRESSURE / VACUUM TESTER / VACUOMETRO DOPPIA FUNZIONE / VACUOMÈTRE DOUBLE FONCTION

Presión y vacío.
Ideal para comprobar las colas.

Combination unit that does pressure and vacuum testing in one units.
Recommended to test drives.

Pressione e sottovuoto. Ideale per il controllo dei piedi.

Pression et vide.
Idéal pour vérifier les embases.

REF
REC55134

RECmar



COMPRESÍMETRO / COMPRESSION TESTER KIT / MANOMETRO / COMPRESSIOMÈTRE

Para motores gasolina con bases GM o Ford.

For gas engines with GM or Ford base.

Per motori benzina con base GM e Ford.

Pour les moteurs à essence bases GM ou Ford.

REF
CRA902171



PISTOLA PUESTA A PUNTO / TIMING LIGHT / PISTOLA MESSA A PUNTO / LAMPE STROBOSCOPIQUE

Con regulador de avance.

0-60 advance scale.

Con regolatore avanzamento.

Avec régulateur d'avance.

REF
CRA921023



INTERRUPTOR ARRANQUE / REMOTE STARTER / INTERRUTTORE AVVIAMENTO / INTERRUPTEUR DE DÉMARRAGE A DISTANCE

REF
CRA902175



MULTITESTER DIGITAL

Multímetro ecológico autorango con símbolos de función en pantalla, energía mediante generador manual incorporado, también puede funcionar con batería. Incorpora manivela plegable para cargar el multímetro, 20 segundos de manivela generan suficiente carga para trabajar 10 min (sin batería).
Equipo recomendado para mantenimiento del sector naútico.
Multímetro digital de 3 5/6 díg. (6000)
Medidas de tensión CC / CA
Medidas de corriente CC / CA
Medidas de resistencia / continuidad
Medidas de capacidades / frecuencias
Medidas / Prueba de diodos
Detecta tensión AC o DC automáticamente
Retención de lectura Hold
Selección de rango: auto y manual
Función de autoapagado (3min)
Pantalla grande 46x45mm

DIGITAL MULTITESTER

Ecological autoranging multimeter with function panel on screen, hand power generator, it can also run on battery. Includes folding crank to charge the meter, 20-second crank generate enough charge to work 10 min (without battery).
Recommended equipment for maintenance, nautical sector.
Digital Multimeter 3 5/6 Digit. (6000)
Measures voltage DC / AC
Measures DC / AC current
Measures resistance / continuity
Measures capacity / frequency
Measures / Diode Test
Detects AC or DC voltage automatically
Hold reading retention
Range Selection: auto and manual
Auto Off function (3min)
Large display 46x45mm

MULTITESTER DIGITALE

Multítester ecologico con simboli di funzione nello schermo, energia mediante generatore manuale incorporato, funziona anche con batteria.
Manovella piegabile incorporata, per ricaricare il multitester, 20 secondi di manovella. In genere per lavorare è sufficiente caricarlo per 10 minuti senza batteria.
Strumento raccomandato per utilizzo nel settore nautico.
Multítester digitale 3 5/6 díg. (6000)
Misure di tensione CC / CA
Misure di corrente CC / CA
Misure di resistenza / continuità
Misure di capacità / frequenza
Misure / Prova di diodi
Rileva la tensione AC o DC automaticamente
Ritenzione di lettura Hold
Selezione di gamma: auto e manuale
Accensione automatica (3min)
Display grande 46x45mm

MULTIMÈTRE DIGITAL

Multimètre écologique avec symboles de fonction sur l'écran, alimentation au moyen d'un générateur manuel intégré, il peut également fonctionner avec une batterie. Il intègre une manivelle pliante pour charger le multimètre, 20 secondes de manivelle génèrent suffisamment de charge pour fonctionner 10 min (sans batterie).
Matériel recommandé pour la maintenance, secteur nautique.
Multimètre digital 3 5/6 chiffres. (6000)
Mesures de tension DC / AC
Mesures de courant DC / AC
Mesures de résistance / continuité
Mesures de capacité / fréquence
Mesures / Test de diode
Détecte automatiquement la tension alternative ou continue
Maintien la rétention de lecture
Sélection de gamme: automatique et manuelle
Fonction d'arrêt automatique (3min)
Grand écran 46x45mm



REF
TEC145

VACUÓMETRO SINCRONIZADOR

Vacuómetro, sincronizador de admisión, analizador dinámico de fugas y tacómetro. Impermeable e insumergible con una funda especial.
Posee mayor estabilidad que los indicadores analógicos o que cualquier otro sistema. Se autorregula a los cambios de presión barométrica.
Alimentación con corriente continua de 12 V, se puede utilizar con cualquier batería de embarcación o vehículo o con un adaptador de entrada a la red (230V/12V).
Indicadores LED de batería descargada y de alimentación no adecuada.
Contiene: Cable y pinzas por alimentación 12V, tubos de santoprene de conexión, 2 juegos de adaptadores flexi-rígidos, caja de almacenaje.

VACUUMMATE ALLWEATHER

Vacuumate allweather, 4 x carb/throttle valve.
Shock resistant composite-moulded polyurethane and polycarbonate casing for maximum strength and resilience.
Self-calibrates for barometric changes.
Solid state sensors are drop proof. It has internal rechargeable 1,5Ah 7,2V NiMH batteries providing up to 6 hours autonomy. Battery power is conserved by auto-switch-off 5 minutes after last being used and LEDs use full power only when measurements are taken.
Kit includes custom travel case, battery cord-set, T-connector & 2 full sets of unique flexi-rigid.

VACUOMETRO

Vacuometro, sincronizzatore d'aspirazione, analizzatore dinamico di fughe e tachimetro.
Impermeabile e immergibile con una custodia speciale.
Possiede maggiore sensibilità degli indicatori analogici o con altri sistemi.
Si autoregola al cambio di pressione barometrica.
Alimentazione con corrente continua da 12 V, si può utilizzare con qualsiasi batteria per imbarcazioni, veicoli e con un adattatore di entrata da 230V/12V.
Indictore LED di batteria scarica e di alimentazione non corretta. Contiene: Cavi e pinze per alimentazione 12V, tubi di santoprene di connessine, 2 adattatori flexi-rigidi, scatola per conservare l'attrezzo.

VACUOMETRE SYNCHRONISEUR

VacuumMate affiche la pression d'admission individuelle de 4 carburateurs séparés (ou boîtier papillons à injection de carburant). Imperméable et insubmersible avec une housse spéciale.
Il a une plus grande stabilité que les indicateurs analogiques ou tout autre système. Il autorégule les changements de pression barométrique.
Alimentation 12 V DC, utilisable avec n'importe quelle batterie de bateau ou de véhicule ou avec un adaptateur secteur (230V/12V).
Indicateurs LED de batterie déchargée et de puissance insuffisante.
Contient: câble d'alimentation 12V et pinces, tubes de connexion, 2 jeux d'adaptateurs flexi-rigides, boîte de rangement.



REF
TCMVRM5

PINZA AMPERIMÉTRICA

Tenaza autorango y multifunción para AC y DC.
Diámetro maxilar: 30 mm
Display de 3 3/4 dígitos. Máx. 3999.
Realiza medidas en: AC/DC: 40A/400A
Precisión: +/-(1,9% + 5 d. en AC)
Precisión: +/-(2,5% +10 d. en DC)
Ancho de banda: 50Hz - 500Hz (AC)
Resolución:AC/DC 10mA. 100mV.
Resistencia: 400 Ohms.

AMPERIC NIPPER

Iron autoranging and multifunction for AC and DC.
Jaw diameter: 30 mm
Display of 3 3/4 digit. Max. 3999.
Measurements in: AC/DC current: 40A/400A
Precision: +/-(1,9% + 5 d. en AC)
Precision: +/-(2,5% +10 d. en DC)
Bandwidth: 50 Hz - 500 Hz (AC)
Resolution: AC/DC 10mA. 100mV.
Resistence: 400 Ohms.

PINZA AMPEROMETRICA

Pinza multifunzione per AC e DC.
Diametro max: 30 mm.
Display da 3 3/4 digitale. Máx. 3999.
Può realizzare misurazioni in:
Corrente AC/DC: 40A/400A.
Precisione: +/-(1,9% + 5 d. en AC)
Precisione: +/-(2,5% +10 d. en DC
Banda larga: 50Hz - 500Hz (AC)
Risoluzione:AC/DC 10mA. 100mV.
Resistenza: 400 Ohms.

PINCE AMPÈREMÉTRIQUE

Pince ampèremétrique multifonction pour AC et DC.
Diamètre maxi: 30 mm
Affichage de 3 3/4 chiffres. Max. 3999
Effectue des mesures en: AC / DC: 40A / 400A
Précision: +/- (1,9% + 5 jours en CA)
Précision: +/- (2,5% +10 d. En DC)
Bande passante: 50 Hz - 500 Hz (AC)
Résolution: AC / DC 10mA. 100mV
Résistance: 400 Ohms



REF
TEC218

TERMÓMETRO MULTIFUNCIONAL

Termómetro multifunción digital, por rayos infrarrojos.
Emisividad fija: 0,95 Rango: -20ºC + 320ºC.
Lectura en grados centígrados y farenheit.
Precisión +/- 2%. Resolución: 1ºC
Distancia óptima de medida: de 6 a 60 cm.
Retención de la última lectura.
Autoapagado.

INFRARED THERMOMETER

Multifunction digital infrared thermometer.
Fixed emissivity: 0.95 range: - 20 °C 320 °C.
Reading in Celsius and Fahrenheit.
Precision +/-2%. Resolution: 1ºC
Distancia optimal measurement: 6 to 60 cm.
Retention of the last reading.
Auto Off function.

TERMOMETRO MULTIFUNZIONALE

Termometro multifunzione digitale, a infrarrossi.
Misurazione: 0,95 Rango: -20ºC + 320ºC.
Lettura in gradi centigradi e farenheit.
Precisione +/- 2%. Risoluzione: 1ºC
Distanza ottimale di misurazione: da 6 a 60 cm.
Memoria dell'ultima lettura.
Autospegnimento.

THERMOMÈTRE MULTIFONCTIONNEL

Thermomètre multifonction numérique, par rayons infrarouges.
Mesure fixe: 0,95 Plage: -20ºC + 320ºC.
Lecture en degrés Celsius et farenheit.
Précision +/- 2%. Résolution: 1ºC
Distance de mesure optimale: de 6 à 60 cm.
Conservation de la dernière lecture.
Arrêt automatique

REF
TECDT8580



ESTABILIZADORES, ELEVADORES Y SEGURIDAD

HYDROFOIL STABILIZER AND SECURITY

STABILIZZATORI, ASCENSORI E SICUREZZA

STABILISATEURS, POWER TRIM-LIFT ET SÉCURITÉ

ALETAS ESTATILIZADORAS

Aletas para acoplar a la placa de cavitación de los motores fueraborda y colas intra-fueraborda. Se obtiene el planeo en menor tiempo. Elimina la cavitación. Mejora la sustentación. Permite mayor estabilidad y ahorro de combustible.

HYDROFOIL STABILIZER

Gives outboards and sterndrives a performance boost. Wipes out cavitation. On plane in less time. Saves fuel. Delivers true stabilization.

ALETTE

Alette da installare nei motori fuoribordo o nei piedi entro-fuoribordo. Planata in minor tempo. Elimina la cavitazione. Migliora la stabilità e riduce il consumo del carburante.

HYDROFOIL

Hydrofoil à fixer sur la plaque de cavitation des moteurs hors-bord et les embases. Le déjaugeage met moins de temps. Élimine la cavitation. Permet une plus grande stabilité et économise de carburant.

REF		(cm)
SRXPIJR	2,5 HP - 40 HP	18,50
SRXPI	40 HP +	18,50

StingRay



SRXPIJR



SRXPI

Diseño de montaje SIN AGUJEROS.

NO-DRILL mounting design.

Montaggio senza fori.

Conception de montage SANS TROUS.

REF		(cm)
SRSF	40 HP - 300 HP	18,50

StingRay





Diseño de montaje SIN AGUJEROS
Perfil hidrodinámico pulido
Empuje mejorado
Canalización del chorro de agua

NO-DRILL mounting design.
Sleeker hydrodynamic profile.
Captive Prop-Wash Resulting In
Improved Thrust
Fastest Hole Shot

Montaggio senza fori.
Profilo idrodinamico.
Spinta migliorata.
Canalizzazione del getto dell'acqua.

Conception de montage SANS TROUS
Profil hydrodynamique poli
Poussée améliorée
Canalisation par jet d'eau

REF		(cm)
SRXRIIIJR.	2,5 HP - 75 HP	18,50
SRXRIII	75 HP +	18,50

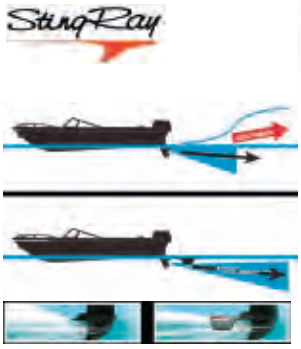







REF		(cm)
SRPRO1	40 HP - 300 HP	19,55

POWER TRIM-LIFT

Soporte con kit de Power Trim y Tilt.
Fabricado en extrusión de aluminio con tornillos de acero inox.
El motor electro-hidráulico de 3500kg de empuje se encuentra dentro de un contenedor para una mayor protección.

Electric hydraulic Tilt & Trim with a rated thrust of 7800 lbs.
Made with extruded aluminum and stainless steel fasteners.

Supporto con kit Power Trim e Tilt.
Fabbricato in alluminio con viti in acciaio inox.
Il motore elettroidraulico ha una spinta da 3500kg si trova all'interno di un contenitore per una maggior protezione.

Prise en charge avec le kit Power Trim et Tilt.
Fabriqué en aluminium extrudé avec des vis en acier inoxydable.
Le moteur de poussée électro-hydraulique de 3500 kg est à l'intérieur d'un boîtier pour une protection supplémentaire.

				CMC13002Q	CMC13001Q
Fuerabordas	Outboards	Fuoribordo	Hors-bord	-130 HP	-130 HP
Recorrido Trim	Trim travel	Escursione Trim	Angle de Trim	20°	20°
Recorrido Tilt	Tilt travel	Escursione Tilt	Angle de Tilt	90°	90°
Alimentación	Operation	Alimentazione	Alimentation	12 V	12 V
Reloj indicador	Lift gauge	Indicatore trim	Indicateur de trim		✔
Separación del espejo	Set-Back from transom	Specchio di poppa	Recul de traverse	152 mm 6"	152 mm 6"





Soporte con kit de Power Trim y Tilt.
Fabricado en extrusión de aluminio con tornillos de acero inox.
El motor electro-hidráulico de 3500 kg de empuje se encuentra dentro de un contenedor para una mayor protección.

Electric hydraulic Tilt & Trim with a rated thrust of 7800 lbs.
Made with extruded aluminum and stainless steel fasteners.

Supporto con kit Power Trim e Tilt.
Fabbricato in alluminio con viti in acciaio inox.
Il motore elettroidraulico ha una spinta di 3500kg e si trova all'interno di un contenitore per una maggior protezione.

Prise en charge avec le kit Power Trim et Tilt.
Fabriqué aluminium extrudé avec des vis en acier inoxydable.
Le moteur électro-hydraulique à une poussée de 3500 kg il est à l'intérieur d'un boîtier pour une protection supplémentaire.

				CMC52100D
Fuerabordas	Outboards	Fuoribordo	Hors-bord	-35 HP
Recorrido Trim	Trim Travel	Escursione Trim	Angle de Trim	84°
Alimentación	Operation	Alimentazione	Alimentation	12 V
Separación del espejo	Set-Back from transom	Specchio di poppa	Recul de traverse	140 mm 5 1/2"





POWER LIFT

Soporte con kit elevador vertical. Fabricado en extrusión de aluminio con tornillos de acero inox.
El motor electro-hidráulico de 3500 kg de empuje se encuentra dentro de un contenedor para una mayor protección. Tornillos de 3/4" de acero inoxidable, con tuercas de aleación de aluminio y bronce resistentes a los choques y corrosión.

Electric hydraulic power lift transom jack with a rated thrust of 7800 lbs.
Made of 1/2" 6061 T6 alloy aluminum extrusions and stainless steel fasteners.
Totally waterproof electro-hydraulic power lift transom jack with a rated thrust of 7800 lbs.

Supporto con kit elevatore verticale. Fabbricato in alluminio con viti in acciaio inox.
Il motore elettroidraulico ha una spinta da 3500kg e si trova all'interno di un contenitore per una maggior protezione.
Viti da 3/4" in acciaio inox, con dadi in alluminio e bronzo resistenti alla corrosione.

Support avec kit de levage vertical. Fabriqué en aluminium extrudé avec des vis en acier inoxydable.
Le moteur électro-hydraulique à poussée de 3500 kg est à l'intérieur d'un boîtier pour une protection supplémentaire.
Vis 3/4 "en acier inoxydable, avec écrous en alliage d'aluminium et de bronze résistant aux chocs et à la corrosion.

				CMC65001Q
Fuerabordas	Outboards	Fuoribordo	Hors-bord	V6
Recorrido vertical	Vertical travel	Lavoro verticale	Relevage vertical	125 mm / 5"
Alimentación	Operation	Alimentazione	Alimentation	12V
Dimensiones	Dimensions	Dimensioni	Les dimensions	460 x 420 mm 18 1/8" x 16 1/2"
Reloj indicador	Lift gauge	Indicatore trim	Indicateur de Trim	✔
Separación del espejo	Set-Back from transom	Specchio di poppa	Recul de traverse	140 mm / 5 1/2"





				CMC61001Q
Reloj indicador	Lift gauge	Indicatore trim	Indicateur de Trim	✔
Separación del espejo	Set-Back from transom	Specchio di poppa	Recul de traverse	254 mm / 10"





V-8 300 HP

				CMC65501
Fuerabordas	Outboards	Fuoribordo	Hors-bord	V8 300HP
Reloj indicador	Lift gauge	Indicatore trim	Indicateur de Trim	✔
Separación del espejo	Set-Back from transom	Specchio di poppa	Recul de traverse	140 mm 5-1/2"





new

Soporte con kit elevador vertical. Fabricado en extrusión de aluminio con tornillos de acero inox. de 3/4".

Electric hydraulic power lift transom jack. Made with extruded aluminum and stainless steel fasteners.
Totally waterproof.

Supporto con kit elevatore verticale. Fabbricato in alluminio con viti in acciaio inox da 3/4".

Support avec kit de levage vertical. Fabriqué en aluminium extrudé avec des vis en acier inoxydable. 3/4 '.

				THAHJM-4DP
Fuerabordas	Outboards	Fuoribordo	Hors-bord	75 HP
Recorrido vertical	Vertical travel	Lavoro verticale	Relevage vertical	127 mm / 5"
Alimentación	Operation	Alimentazione	Alimentation	12 V
Reloj indicador	Lift gauge	Indicatore trim	Indicateur de Trim	✔
Separación del espejo	Set-Back from transom	Specchio di poppa	Recul de traverse	37 x 30 cm 14 5/8" x 11 1/2"





ADAPTADORES. POWER TRIM-LIFT

Par de cuñas de 2º inclinación para espejo de popa.

REF
CMC20122Q

BACK SPACERS. POWER TRIM-LIFT

Pair of 2 degrees wedge for the transom.

ADATTATORI. POWER TRIM-LIFT

Piastre per lo specchio di poppa inclinate di 2°

ADAPTATEURS POWER TRIM-LIFT

Paire de cales avec 2ème inclinaison pour tableau arrière.



Kit de adaptadores para la instalación de motores con palomillas.

REF
CMC13022Q

Adaptors kit for motors mounted with transom clamps.

Kit per l'installazione di motori con chiusura con galletti.

Kit d'adaptateur pour l'installation du moteur.

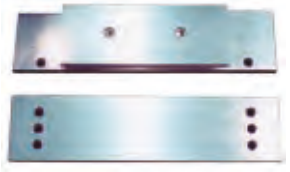

ADAPTADORES. POWER LIFT

Kit de adaptadores para motores de 75 HP.

REF
THAHJM-CMADP

BACK SPACERS. POWER LIFT

Clampon motor adapter 75 HP.

ADATTATORI. POWER LIFT

Kit adattatori per motori 75 HP

ADAPTATEURS POWER LIFT

Kit adaptateur pour moteurs 75 CV.



ALARGO BARRA FUERABORDA

Prolongador de caña con pulsador de paro, para motores fueraborda. Fabricado en aluminio anodizado y maneta de plástico.

EXTENSION HANDLE OUTBOARD

With push-button to switch-off the engine.
Made of anodized aluminum and plastic handle.

PROLUNGA PER FUORIBORDO

Prolunga per fuoribordo, fabbricato in alluminio anodizzato e impugnatura in plastica.

RALLONGE DE BARRE FRANCHE POUR HB

Rallonge de barre franche avec bouton d'arrêt, pour moteurs hors-bord. Fabriqué en aluminium anodisé et poignée en plastique.

REF	(cm)	
GS73135	70	Fijo | Fixed | Fisso | Fixe
GS73136	60 - 100	Telescópico | Telescopic | Telescopico | Télescopique

GOLDENSHIP



PROTECTOR DE HÉLICES

Mejora el control direccional y aumentando la eficiencia de la hélice. Fabricado en polipropileno de alto impacto.
NOTA: Todos los motores «Big Foot» y de arrastre requieren la medida superior. Velocidad Máx: 30 nudos

PROPELLER PROTECTOR

Manufactured in high impact polypropylene. Better control in directional force.
Increase the propeller efficiency.
NOTE: All hp's with «Big Foot» and High Thrust applications require next size up.
Max. Speed: 30 knots

PROTETTORI ELICHE

Migliora il controllo direzionale e aumentando l'efficenza delle eliche. Prodotto in polipropilene di alta qualità.
NOTA: Tutti i motori «Big Foot» a alta spinta richiedono la referenza superiore.
Velocità Mas.: 30 nodi

PROTECTION D'HÉLICE

Améliore le contrôle directionnel et augmente l'efficacité de l'hélice. Fabriqué en polypropylène résistant aux chocs.
REMARQUE: Tous les moteurs "Big Foot" et à forte poussée nécessitent la taille supérieure. Vitesse maximale: 30 nœuds

REF		Ø INT
REC5-9.8	5 - 9 HP	9"
REC9.9-20	9.9 - 20 HP	9"
REC25-35	25 - 35 HP	11"
REC40-65	40 - 65 HP	13"
REC70-100	70 - 100 HP	14"
REC110-230	110 - 230 HP	16"

GOLDENSHIP



ANTI-ROBO / ANTI THEFT / ANTI-FURTO / ANTIVOL

Para motores fueraborda. Fabricado en acero inox. de 3 mm con candado de latón con 2 llaves.

Manufactured in 3 mm stainless steel pipe. Provided with a padlock in brass with 2 keys.

Per motori fuoribordo. Prodotto in acciaio inox da 3 mm con luchetto in ottone con 2 chiavi.

Pour les moteurs hors-bord. Fabriqué en acier inoxydable. 3 mm avec serrure en laiton livré avec 2 clés.

REF	
GS73138	240 mm
GS73139	320 mm

GOLDENSHIP



ARNÉS FUERABORDA / HOISTING HARNESS / IMBRAGATURA FUORIBORDO / HARNAIS HORS-BORD

Confeccionado con cincha sintética. Una sola medida se ajusta para fueraborda de 2 a 15 HP.

Outboard hoisting harness. One size works on virtually all 2 to 15 HP outboards.

Confezionato con cinghia sintetica. Una sola misura, si regola per i fuoribordo da 2 a 15 HP.

Fabriqué dans une sangle synthétique. Une seule taille à ajustée pour les moteurs hors-bord de 2 à 15 CV.

REF
GS73069

GOLDENSHIP





FUNDAS PARA FUERABORDA / OUTBOARD COVERS / COPERTURA FUORIBORDO / HOUSSES POUR HORS-BORD

Para motores fueraborda de 2 y 4 tiempos. Confeccionadas en tejido de poliéster de 320 g/m2. Impermeabilizado, transpirable. Costuras reforzadas. Color gris claro.

For outboard engines 2 & 4 stoke. Manufactured in 320 gsm polyester canvas. Weather proof, breathable. Reinforced top stitched seams. Grey color.

Per motori fuoribordo di 2 e 4 tempi. Confezionato in tessuto di poliestere da 320 g/m^2. Impermeabile, traspirante. Cuciture rinforzate. Colore grigio chiaro.

Pour moteurs hors-bord 2 et 4 temps. Fabriqué en tissu polyester 320g/m2. Imperméable, respirant. Coutures renforcées. Couleur gris clair.

REF		A	B	C
OCEMA0741	-15 hp	32 cm	27 cm	50 cm
OCEMA0742	15-30 hp	40 cm	30 cm	56 cm
OCEMA0743	30-60 hp	49 cm	36 cm	62 cm
OCEMA0744	60-100 hp	53 cm	40 cm	68 cm
OCEMA0745	100-150 hp	58 cm	46 cm	74 cm
OCEMA0746	175-250 hp	60 cm	50 cm	82 cm

OCEANSOUTH

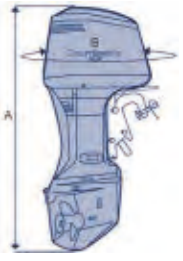



REF		A	B
OCEMA0751	- 6 hp	98 cm	126 cm
OCEMA0752	8 - 15 hp	110 cm	140 cm
OCEMA0753	15 - 20 hp	125 cm	150 cm
OCEMA0754	20 - 30 hp	137 cm	165 cm
OCEMA0755	30 - 60 hp	144 cm	180 cm
OCEMA0756	60 - 100 hp	170 cm	200 cm
OCEMA0757	115 - 150 hp	190 cm	226 cm
OCEMA0758	175 - 250 hp	197 cm	248 cm

OCEANSOUTH



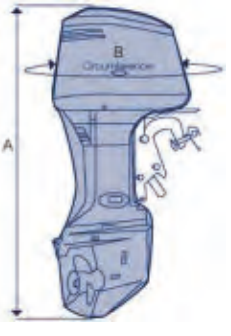

YAMAHA

ES

GUÍA MANTENIMIENTO COLAS Y Y KITS 64

SISTEMA DE ALIMENTACIÓN Y FILTRACIÓN 74

ACEITE 84
ACELERADOR 101
VARILLA DE ACELERADOR 101
BOMBA DE COMBUSTIBLE EN LÍNEA 74
ABRAZADERA PARA MANGUERA 75
ADAPTADOR LÍNEA DE COMBUSTIBLE 75
BOMBA DE COMBUSTIBLE 74
LÍNEA DE COMBUSTIBLE 74
MANGUERA DE COMBUSTIBLE 74
MUELLE TUBO COMBUSTIBLE 75
BOMBA DE COMBUSTIBLE 85
BOMBA DE COMBUSTIBLE ELÉCTRICA 86
BOMBA DE COMBUSTIBLE MECÁNICA 85
JUNTAS VST 88
MEMBRANAS Y JUNTAS 87
REGULADORES DE PRESIÓN COMBUSTIBLE 89
BOMBA DE INYECCIÓN DE ACEITE 84
CARBURADOR 91
AGUJA CARBURADOR 98
BOYAS 100
CARBURADOR COMPLETO 91
CONECTOR DE CARBURADOR 100
ELEMENTO FILTRO DEL CARBURADOR 101
GUÍA CARBURADORES 93
JUNTAS CARBURADORES 94
KITS CARBURADORES 95
KIT 3 CARBURADORES 92
PASADOR DE BOYA 99
TORNILLOS CARBURADOR 98
VÁLVULA DE LÁMINAS 99
COMPONENTES TANQUE Y CONECTORES 75
CONECTOR DE DEPÓSITO 76
FILTRO 76
LLAVE DE CIERRE DE DEPÓSITO 76
MEDIDOR DE COMBUSTIBLE 76
PASAMAMPAROS 77
RESORTE DE SEGURIDAD PARA TAPÓN 75
TAPÓN CON RESPIRADERO 75
TAPÓN 75
FILTRO DE ACEITE 83
GUÍA FILTROS DE ACEITE 83
FILTRO DE COMBUSTIBLE Y ELEMENTOS 77
BRACKET 77
FILTRO DECANTADOR DE COMBUSTIBLE COMPLETO CON VASO TRASPARENTE 78
FILTRO COMBUSTIBLE MONTAJE EN LÍNEA 80
FILTRO COMBUSTIBLE SEPARADOR AGUA 77
GUÍA FILTROS DE COMBUSTIBLE 81
GUÍA FILTROS VST 82
FILTRO VST 82
LLAVES PARA FILTRO 79
RACOR DE LATÓN 79
INYECTORES 89
GUÍA INYECTORES Y SENSORES 90
INYECTOR 89

SISTEMA ELÉCTRICO 102

BOBINAS 104
BOBINA DE CARGA 106
BOBINA DE IGNICIÓN 104
BOBINA DE LUZ 104
BOBINA DE PULSACIÓN 107
BOBINA DE T.C.I. 106
BUJÍAS 108
CDI Y CAJAS NEGRAS 117
DESCONECTORES DE SEGURIDAD 120
KITS 121
LLAVES DE ARRANQUE 113
LLAVE DOBLE INSTALACIÓN 113
LLAVE CON CHOQUE 114
LLAVE PARA MANDO POPERO 114
MONTAJE EN MANDO DE CONTROL 113
MONTAJE EN PANEL 113
MOTORES DE ARRANQUE 110
CABLE DE MOTOR DE ARRANQUE A BATERÍA 112
MUELLE DE ARRANQUE 112
PLATO Y PLACA DE ARRANQUE MANUAL 113
TIRADOR DE ARRANQUE 113
TRINQUETE TRACCIÓN PLATO 112
REGULADORES Y RECTIFICADORES 116
SENSORES 102
SENSOR ACCELERACIÓN TS 103
SENSOR DE OXÍGENO 103
SENSOR MAP 102
SENSOR PRESIÓN DE ACEITE 103
SENSOR IAC 102
SENSOR TEMPERATURA DEL AGUA 103
SENSOR TPS 102
SOLENOIDE RELÉ 114
STARTOR 121
TRIM, TILT & POWER TRIM 122
EXTRACTOR TAPONES DE TRIM 125
DESPIECE PISTÓN TRIM 125
INSTALACIÓN ELÉCTRICA 122
INTERRUPTOR POWER TRIM 122
POWER TRIM COMPLETO 124
TRIM COMPLETO BIDIRECCIONAL 122
VOLANTE DE MOTOR 109
ELÉCTRICO 109
SIN DIENTES (MANUAL) 109

SISTEMA DE GOBIERNO 126

ARNÉS 128
ARNÉS COMPLETO (703) 128
EXTENSIÓN DE ARNÉS (703/704) 128
BRACKET 131
BRACKET BABOR 131
BRACKET ESTRIBOR 131
CIRCLIP 132
CONECTOR 133
EJE CONECTOR ACELERADOR 132
ENGRASADOR INOX 316 M6 133
SOPORTE BARRA DE DIRECCIÓN 132
SOPORTE GIRATORIO 131
SOPORTE INFERIOR 132
RETÉN INFERIOR DEL BRACKET 132
VARILLA DE BASCULACIÓN 132
BUJES 133
COLLAR 134
COMPONENTES 703 129
CABLE DE ACELERADOR 130
CABLES DE CONTROL 130
ESPACIADOR 129
MANETA ACELERADOR 131
PALANCA ACELERADOR 129
PLACA CERRADURA SELECTOR 129
RUEDA ACELERACION 129
VARILLA DE ENLACE 131
EJE DE CAMBIO 134
INTERRUPTORES PARA MANDOS 127
INTERRUPTOR PANEL COMPLETO O DOBLE ESTACIÓN 128
INTERRUPTOR PANEL SIMPLE (704) 128
INTERRUPTOR POWER TRIM (703) 127
ZUMBADOR ACÚSTICO (703) 127
MANDO ACELERADOR 134
MANETAS Y FIJACIONES 134
MANDOS DE CONTROL 126
CONECTORES DE CABLES 127
MANDO LATERAL PUSH TO TOPEN 126
MANDO LATERAL 127
MANDO PARA CONSOLA 127
SILENBLOCK 135

SISTEMA DE REFRIGERACIÓN 136

ÁNODOS 158
ÁNODO CANADA METAL 158
ÁNODO TECNOSEAL 163
GUÍA DE ÁNODOS 169
KITS DE ÁNODOS CANADA METAL 162
KITS DE ÁNODOS TECNOSEAL 168
TAPA DE ÁNODO (66M) 168
BOMBA DE AGUA 147
CUERPO BOMBA DE AGUA 147
GUÍA BOMBAS DE AGUA 4T 154
GUÍA BOMBAS DE AGUA 2T 155
GUÍA KITS DE BOMBA DE AGUA 153
KITS DE REPARACIÓN BOMBA DE AGUA 150
TAPA DE LA BOMBA 148
GUÍA DE IMPULSORES 143
KITS DE JUNTAS 144
LÍQUIDO INHIBIDOR DE LA CORROSIÓN 136
TERMOSTATO 136
CUBIERTAS TERMOSTATO 139
GUÍA TERMOSTATO 137
JUNTAS TAPA DE REFRIGERACIÓN 140
JUNTAS TERMOSTATO 138
NIPLE 139
RESORTE 139
TERMOSTATO 136
VÁLVULA ANTIPRESIÓN DE TERMOSTATO 139

PARTES DEL MOTOR 170

CIGÜEÑAL 4 TIEMPOS 219
GUÍA CIGÜEÑAL COMPLETO 219
CIGÜEÑAL 2 TIEMPOS 256
GUÍA BIELAS 260
GUÍA CIGÜEÑAL COMPLETO 256
GUÍA PARTES DE CIGÜEÑAL 256
GUÍA RODAMIENTOS DE MOTOR 257
DESPIECE MOTOR DE 4 TIEMPOS 170
F2.5 170
F4 174
F5 • F6 178
F8 181
F9.9 180
F13.5 • F15 182
F20 • F25 190
F30 • F40 196
F50 • F60 202
F70 204
F80 • F100 • F115 208
F150 210
F200 • F225 • F250 212
F300 • F350 214
DESPIECE MOTOR DE 2 TIEMPOS 220
2 220
4 • 5 221
6 • 8 222
9.9 • 13.5 • 15 226

25 • 30 228
40 232
48 •55 238
50 • 60 • 70 240
75 • 85 242
100 • 115 • 130 • 140 244
150 • 175 • 200 • 225 246
GUÍA CORREAS DE DISTRIBUCIÓN 267
JUNTAS DE MOTOR 4 TIEMPOS 215
JUNTAS BASE DE MOTOR 217
JUNTAS DE CULATA 215
KIT JUNTAS DE CULATA 216
GUÍA JUNTAS DE MOTOR 218
JUNTAS DE MOTOR 2 TIEMPOS 248
JUNTAS BASE DE MOTOR 252
JUNTAS DE CULATA 248
JUNTAS DE CULATÍN 255
GUÍA JUNTAS DE MOTOR 254
KITS JUNTAS DE CULATA 249
PISTONES 4 TIEMPOS 219
KITS DE PISTONES 219
PISTONES 2 TIEMPOS 262
GUÍA DE PISTONES Y SEGMENTOS 266
KIT DE PISTONES 262

SISTEMA DE ESCAPE Y ADMISIÓN 268

SISTEMA DE ADMISIÓN 273
JUNTAS DEL SISTEMA DE ADMISIÓN 273
SISTEMA DE ESCAPE 268
JUNTAS DE COLECTOR Y CARTER 270
JUNTAS DE SISTEMA DE ESCAPE 268

UNIDADES DE TRANSMISIÓN 277

COLA COMPLETA 277
COLAS DE 4 TIEMPOS 277
COLAS DE 2 TIEMPOS 279
DESPIECE COLAS 4 TIEMPOS 282
F2.5 282
F4 284
F5 286
F6 • F8 • F9.9 288
F13.5 • F15 290
F20 • F25 292
F30 • F40 298
F50 • F60 306
F70 314
F80 • F100 318
F115 • F130 322
F150 • F175 • F200 326
F225 330
F250 • F300 334
F350 340
DESPIECE COLAS 2 TIEMPOS 342
2 342
4 • 5 344
6 • 8 346
9.9 348
13.5 • 15 350
20 • 25 • 30 352
40 • 50 358
55 368
75 • 85 370
80 • 90 372
115 • 130 374
V6 378
225 • 250 382
VZ200 • VZ205 • VZ250 • VZ300 386
GUÍA PIEZAS COLA 387
GUÍA RODAMIENTOS 393

SISTEMA DE PROPULSIÓN 401

HÉLICES ALUMINIO E INOXIDABLE DE 3 Y 4 PALAS 401
GUÍA HÉLICES CON NÚCLEO INTEGRADO 402
GUÍA DE RECAMBIOS DE HÉLICE 405
HÉLICES PARA NÚCLEO INTERCAMBIABLE 404
NÚCLEO INTERCAMBIABLE 405
REF --> RO 406
RO --> REF 420

EN

DRIVES MAINTENANCE GUIDE & KITS 64

FUEL & FILTRATION SYSTEM 74

ACCELERATOR 101
VARILLA DE ACELERADOR 101
CARBURATOR 91
ACCELEROGRAPH CONTROL 100
BOLT SCREW 98
CARBURETOR GASKES 94
CARBURETOR KITS 95
ELEMENT FILTER (CARB INLET) 101
FLOATS 100
FULL CARBURATOR 91
GUIDE CARBURETORS 93
KIT 3 CARBURETORS 92
NEEDLE VALVE 98
PIN FLOAT 99
VALVE OF SHEETS 99
FUEL FILTERS AND ELEMENTS 77
BRACKET 77
COMPLET FUEL FILTER, TRANSPARENT BOWL 78
FUEL FILTER GUIDE 82
FUEL FILTER GUIDE VST 81
FILTER KEY 79
IN-LINE FUEL FILTER 80
RACOR MADE IN BRASS 79
VST FILTER 82
WATER SEPARATING FUEL FILTER 77
FUEL PUMP 85
DIAPHRAGMS & GASKETS 87
FUEL PUMP ELECTRIC 86
FUEL PUMP MECHANICAL 85
FUEL REGULATOR 89
VST GASKETS 88
FUEL PUMP IN LINE 74
CLAMP SMALL 75
COUPLER 75
FUEL HOSE 74
FUEL LINE ASSEMBLY 74
FUEL PUMP 74
SPRING, FUEL PIPE 75
FUEL TANK COMPONENTS & CONNECTORS 75
FILTER 76
KNOB OIL SWITCH 76
OLEOMETER ASSY 76
PLUG 75
PLUG WITH BREATHER 75
TANK CONNECTOR 76
THRU HULL 77
SPRING, PREVENT DESQUAMATING 75
INJEKTOR 89
GUIDE INJECTORS & SENDERS 90
INJEKTOR 89
OIL 84
OIL FILTER 83
OIL FILTER GUIDE 83
OIL INJECTION PUMP 84

ELECTRIC SYSTEM 102

CDI & POWER PACK 117
COILS 104
COIL LIGHTING 104
CHARGE COIL 106
IGNITION COIL 104
PULSER COIL 107
SPARK 108
T.C.I. COIL 106
CUT OFF SWITCHES 120
KIT 121
FLYWHELL 109
ELECTRIC 109
WITHOUT TOOTH 109
IGNITION STARTER SWITCH 113
CONTROL BOX 113
DASH MOUNT 113
DUAL ENGINE APPLICATION 113
KEY FOR STERN CONTROL 114
PUSH T. CHOKE 114
REGULATOR AND RECTIFIERS 116
SENSORS 102
IAC SENSOR 102
MAP SENSOR 102
OXYGEN SENSOR 103
TPS SENDER 102
SENSOR 103
SENSOR, OIL PRESSURE 103
SENSOR, WATER TEMPERATURE 103
SOLENOID RELAY 114
STARTERS 110
CONNECTION LINE, POWER 112
PAWL, DRIVE 112
PLATE & DRUM, DRIVE 113
STARTER HANDLE ASSY 113
STEERING SPRING 112
STARTOR 121
TRIM, TILT & POWER TRIM 122
COMPLETE POWER TRIM ASSEMBLY 124
COMPLETE TRIM ASSEMBLY 122
PARTI PISTONE TRIM 125
POWER TRIM SWITCH 122
TRIM PLUGS EXTRACTOR 125
WIRING HARNESS 122

STEERING SYSTEM 126

ARNES 129
ARNES ASSY (703) 129
ARNES EXTENSION (703/704) 129
BRACKET 131
BOLT, CLAMP BRACKET 132
BRACKET OIL SEAL 132
BRACKET ROTARY 131
CIRCLIP 132
CONNECTOR 133
LEFT BRACKET ASSY 131
OILER M6 133
RIGHT BRACKET ASSY 131
SHELL, MOUNT DAMPER 132
THROTTLE SHAFT CONNECTOR 132
TILT ROD 132
BUSHINGS 133
COMPONENTS 703 129
BLOCK CONTROL HANDLE 129
CONTROL CABLES 130
LEVER THROTTLE 131
LINK ROD ASSY 131
PLATE CONTROL BOX 129
THROTTLE CABLE 130
THROTTLE HANDLE INCHING 129
ENGINE CONTROLS 126
CABLE CONNECTOR 127
CONSOLE CONTROL 127
SIDE CONTROL PUSH TO OPEN 126
SIDE CONTROL 127
HANDLE GEAR SHIFT ASSY 134
SILENBLOCK 135
STARTER HANDLE & FIXINGS 134
STEERING HANDLE ASSY 134
SWITCHS FOR ENGINE CONTROLS 127
BUZZER (703) 128

PANEL TWIN STATION 128
POWER TRIM SWITCH (703) 127
SWITCH (704) 128
WASHER, BELOW 134

COOLING SYSTEM 136

ANODES 158
ANODES APPLICATION 169
ANODES CANADA METAL 158
ANODES KIT CANADA METAL 162
ANODES KIT TECNOSEAL 168
ANODES TECNOSEAL 163
COVER ANODE (66M) 168
GASKETS KIT 144
IMPELLER GUIDE 143
SALT OFF 136
THERMOSTAT 136
GASKET, EXHAUST INNER COVER 140
NIPPLE 139
SPRING 139
THERMOSTAT 136
THERMOSTAT COVER 139
THERMOSTAT GASKETS 138
THERMOSTAT GUIDE 137
THERMOSTAT, PRESSURE VALVE 139
WATER PUMP 147
GUIDE WATER PUMP 4 STROKES 154
GUIDE WATER PUMP 2 STROKES 155
GUIDE WATER PUMP SERVICE KITS 153
HOUSING, WATER PUMP 147
WATER PUMP, COVER 148
WATER PUMP SERVICE KITS 150

ENGINE PARTS 170

CRANKSHAFT 4 STROKES 219
GUIDE CRANKSHAFT ASSY 219
CRANKSHAFT 2 STROKES 256
GUIDE CONNECTING ROAD 260
GUIDE CRANKSHAFT ASSY 256
GUIDE CRANKSHAFT PARTS 256
GUIDE ENGINE BEARING 257
ENGINE GASKET 4 STROKES 215
ENGINE GASKET GUIDE 218
CYLINDER GASKET 217
CYLINDER HEAD GASKET 215
CYLINDER HEAD GASKET KIT 216
ENGINE GASKET 2 STROKES 248
ENGINE GASKET GUIDE 254
CYLINDER GASKET 252
CYLINDER HEAD GASKET 248
CYLINDER HEAD GASKET KIT 249
GASKET, HEAD COVER 255
ENGINE PARTS 4 STROKES 170
F2.5 170
F4 174
F5 • F6 178
F8 181
F9.9 180
F13.5 • F15 182
F20 • F25 190
F30 • F40 196
F50 • F60 202
F70 204
F80 • F100 • F115 208
F150 210
F200 • F225 • F250 212
F300 • F350 214
ENGINE PARTS 2 STROKES 220
2 220
4 • 5 221
6 • 8 222
9.9 • 13.5 • 15 226
25 • 30 228
40 232
48 • 55 238
50 • 60 • 70 240
75 • 85 242
100 • 115 • 130 • 140 244
150 • 175 • 200 • 225 246
GUIDE TIMIMG BELT 267
PISTONS 4 STROKES 219
PISTON KITS 219
PISTON 2 STROKES 262
GUIDE PISTON & RING 266
PISTON KITS 262

EXHAUST & INTAKE SYSTEM 268

EXHAUST SYSTEM 268
EXHAUST GASKETS 268
GASKET, UPPERCASING, OIL PAN, MANIFOLD 270
INTAKE SYSTEM 273
GASKETS INTAKE 273

UNIT DRIVES & COMPONENTS 277

COMPLETE GEARCASE ASSY 277
4 STROKES GEARCASE 277
2 STROKES GEARCASE 279
GEAR CASE PARTS 4 STROKES 282
F2.5 282
F4 284
F5 286
F6 • F8 • F9.9 288
F13.5 • F15 290
F20 • F25 292
F30 • F40 298
F50 • F60 306
F70 314
F80 • F100 318
F115 • F130 322
F150 • F175 • F200 326
F225 330
F250 • F300 334
F350 340
GEARCASE PARTS 2 STROKES 342
2 342
4 • 5 344
6 • 8 346
9.9 348
13.5 • 15 350
20 • 25 • 30 352
40 • 50 358
55 368
75 • 85 370
80 • 90 372
115 • 130 374
V6 378
225 • 250 382
VZ200 • VZ205 • VZ250 • VZ300 386
STERN DRIVE BEARING APPLICATION 393
STERN DRIVE COMPONENTS GUIDE 387

PROPULSION SYSTEM 401

3 & 4 BLADE ALUMINIUM & SS PROPELLERS 401
INTERCHANGEABLE HUB 405
PROPELLERS APPLICATION WITH RUBBER HUB 402
PROPELLERS FOR INTERCHANGEABLE HUB 404
PROPELLER SPARE PARTS 405
REF --> OEM 406
OEM --> REF 420

IT

GUIDA MANUTENZIONE E KIT 64

SISTEMA DI ALIMENTAZIONE E FILTRAZIONE 74

ACCELLERATORE 101
ASTA ACCELLERATORE 101
CARBURATORE 91
CARBURATORE COMPLETO 91
CONTROLLO DELL'ACCELEROGRAFO 100
FILTRO CARBURATORE 101
GALLEGGIANTE 100
GUARNIZIONI CARBURATORI 94
GUIDA CARBURATORI 93
KIT CARBURATORI 95
KIT 3 CARBURATORI 92
SPILLO CONICO CARBURATORE 98
SPINOTTO GALLEGGIANTE 99
VALVOLA 99
VITE CARBURATORE 98
COMPONENTI SERBATOIO E CONETTORI 75
ATTACCO SERBATOIO 76
CHIAVE DE DEPOSITO BLOCCO 76
FILTRO 76
MISURATORE DI CARBURANTE 76
MOLLA SECURITÀ PER TAPPO 75
PASSASCAFO 77
SPINA CON RESPIRO 75
TAPPO 75
FILTRI BENZINA E RACCORDI 77
CHIAVE DA FILTRO 79
FILTRO BENZINA PER MONTARE IN LÍNEA 80
FILTRO DI DECANTAZIONE BENZINA COMPLETO CON VASCHETTA TRASPARENTE 78
FILTRO SEPARATORE ACQUA-BENZINA 77
FILTRO VST 82
GUIDA FILTRO BENZINA 81
GUIDA FILTRO BENZINA VST 82
RACCORDO IN OTTONE 79
SUPPORTO 77
FILTRO OLIO 83
GUIDA FILTRO OLIO 83
INIETTORE 89
GUIDA INIETTORI E SENSORI 90
INIETTORE 89
OLIO 84
POMPA BENZINA IN LINIA 74
ADATTATORE 75
FASCETTE 75
MOLLA TUBO COMBUSTIBILE 75
POMPA BENZINA 74
TUBO BENZINA 74
TUBO CARBURANTE 74
POMPA BENZINA 85
GUARNIZIONE VST 88
MEMBRANA E GUARNIZIONI 87
POMPA BENZINA ELETTRICA 86
POMPA BENZINA MECCANICA 85
REGOLATORE BENZINA 89
POMPA INIEZIONE BENZINA 84

SISTEMA ELETTRICO 102

BOBINE 104
BOBINE ACCENSIONE 107
BOBINA AVVIAMENTO 104
BOBINA DI CARICA 106
BOBINA LUCE 104
BOBINE T.C.I. 106
CANDELE 108
CDI E CENTRALINA 117
CHIAVETTA DI SICUREZZA 120
KIT 121
CHIAVI DI ACCENSIONE 113
CHIAVE CON CONTATTO 114
CHIAVE DOPPIA INSTALLAZIONE 113
CHIAVE PER COMANDO A GUIDA 114
MONTAGGIO NEL PANNELLO 113
MONTAGGIO NEL TELECOMANDO 113
MOTORINI AVVIAMENTO 110
CAVO MOTORE DI AVVIAMENTO A BATTERIA 112
CRICCHETTO TRAZIONE PLATTO 112
MANIGLIA AVVIAMENTO 113
MOLLA AVVIAMENTO 112
PLACCA E PLATTO DI AVVIAMENTO MANUALE 113
REGOLATORI E RADDRIZZATORI 116

SENSORE 102
SENSORE ACCELLERATORE TS 103
SENSORE IAC
SENSORE MAP 102
SENSORE OSSIGENO 103
SENSORE PRESIONE DELL'OLIO 103
SENSORE TEMPERATURA ACQUA 103
SENSORE TPS 102
SOLENOIDE RELE 114
STARTOR 121
TRIM, TILT & POWER TRIM 122
ESTRATTORE PER TAPPI DI TRIM 125
INSTALLAZIONE ELETTRICA 122
INTERRUTTORE POWER TRIM 122
MOTORINO POWER TRIM COMPLETO 124
MOTORINO TRIM COMPLETO 122
PARTI PISTONE TRIM 125
VOLANTE MOTORE 109
ELETTRICO 109
SENZA DENTI (MANUALE) 109

SISTEMA DI GUIDA 126

BRACKET 131
ANELLO BRACCETTO 132
ASSE CONNETTORE ACCELLERATORE 132
ASTA BASCULANTE 132
BRACKET BABORDO 131
BRACKET TRIBORDO 131
CIRCLIP 132
CONNETTORE 133
INGRASSATORE INOX 316 M6 133
SUPPORTO BARRA DE DIREZIONE 132
SUPPORTO GIRATORIO 131
SUPPORTO INFERIORE 132
BOCCOLE 133
CAVI 128
CAVO CONTROLLO COMPLETO (703) 128
ESTENSIONE (703/704) 128
COLLARE 134
COMANDI DI CONTROLLO 126
CAVO CONNETTORE 127
COMANDO LATERALE PUSH TO OPEN 126
COMANDO LATERALE 127
COMANDO PER CONSOLLA 127
COMPONENTI 703 129
CAVO ACCELERATORE 130
CAVI COMANDO 130
DISTANZIALE 129
LEVA ACCELLERATORE 129
LEVA COLLEGAMENTO 130
MANIGLIA 131
PLACCA SERRATURA SELETTORE 129
RUOTA ACCELERAZIONE 129
INTERRUTTORI PER CONTROLLO 127
CICALINO (703) 128
INTERRUTTORE PANELLO SIMPLE (704) 128
INTERRUTTORE POWER TRIM (703) 127
PANNELLO DOPPIA STAZIONE 128
LEVERAGGIO 134
MANIGLIA 134
MANIGLIE E CHIUSURE 134
SILENBLOCK 135

SISTEMA DI RAFFREDDAMENTO 136

ANODI 158
ANODI CANADA METAL 158
ANODI TECNOSEAL 163
COPERCHIO ANODO (66M) 168
GUIDA ANODI 169
KIT ANODI CANADA METAL 162
KITS ANODI TECNOSEAL 168
GUIDA GIRANTE 143
KIT GUARNIZIONE 144
LIQUIDO INIBITORE DELLA CORROSIONE 136
POMPA ACQUA 147
COPERCHIO POMPA 148
CORPO, POMPA ACQUA 147
GUIDA KIT POMPA ACQUA 153
GUIDA POMPA ACQUA 4T 154
GUIDA POMPA ACQUA 2T 155
KIT RICAMBI POMPA ACQUA 150
TERMOSTATO 136
COPERCHIO TERMOSTATO 139
GUARNIZIONE COPERCHIO REFRIGERAZIONE 140
GUARNIZIONI TERMOSTATO 138
GUIDA TERMOSTATO 137
MOLLA 139
NIPLE 139
TERMOSTATO 136
VALVOLA ANTI-PRESSIONE DE TERMOSTATO 139

PARTI MOTORE 170

ALBERO MOTORE 4 TEMPI 219
GUIDA ALBERO MOTORE COMPLETO 219
ALBERO MOTORE 2 TEMPI 256
GUIDA ALBERO MOTORE COMPLETO 256
GUIDA BIELLE 260
GUIDA CUSCINETTI MOTORE 257
GUIDA PARTE ALBERO MOTORE 256
GUARNIZIONI MOTORE 4 TEMPI 215
GUARNIZIONE BASE MOTORE 217
GUARNIZIONE TESTATA 215
GUIDA GUARNIZIONE MOTORE 218
KIT GUARNIZIONE TESTATA 216
GUARNIZIONI MOTORE 2 TEMPI 248
GUARNIZIONE BASE MOTORE 252
GUARNIZIONE COPERCHIO TESTATA 255
GUARNIZIONE DE TESTATA 248
GUIDA GUARNIZIONE MOTORE 254
KIT GUARNIZIONE TESTATA 249
GUIDA CINGHIE DISTRIBUZIONE 267
PARTI MOTORE 4 TEMPI 170
F2.5 170
F4 174
F5 • F6 178
F8 181
F9.9 180
F13.5 • F15 182
F20 • F25 190
F30 196
F40 196
F50 • F60 202
F70 204
F80 • F100 • F115 208
F150 210
F200 • F225 • F250 212
F300 • F350 214
PARTI MOTORE 2 TEMPI 220
2 220
4 • 5 221
6 • 8 222
9.9 • 13.5 • 15 226
25 • 30 228
40 232
48 • 55 238
50 • 60 • 70 240
75 • 85 242
100 • 115 • 130 • 140 244
150 • 175 • 200 • 225 246
PISTONI 4 TEMPI 219
KIT PISTONI 219
PISTONE 2 TEMPI 262
KIT PISTONE 262
GUIDA PISTONE E FASCE 266

SISTEMA DI SCARICO E ASPIRAZIONE 268

SISTEMA ASPIRAZIONE 273
GUARNIZIONE SISTEMA ASPIRAZIONE 273
SISTEMA SCARICO 268
GUARNIZIONI COLLETTORE E CARTER 270
GUARNIZIONE SCARICO 268

UNITÀ DI TRASMISSIONE 277

GUIDA RICAMBI PIEDI 387
GUIDA CUSCINETTI TRASMISIONE 393
PIEDI COMPLETI 277
PIEDI 4 TEMPI 279
PARTI PIEDI 4 TEMPI 282
F2.5 282
F4 284
F5 286
F6 • F8 • F9.9 288
F13.5 • F15 290
F20 • F25 292
F30 • F40 298
F50 • F60 306
F70 314
F80 • F100 318
F115 • F130 322
F150 • F175 • F200 326
F225 330
F250 • F300 334
F350 340
PARTI PIEDI 2 TEMPI 342
2 342
4 • 5 344
6 • 8 346
9.9 348
13.5 • 15 350
20 • 25 • 30 352
40 • 50 358
55 368
75 • 85 370
80 • 90 372
115 • 130 374
V6 378
225 • 250 382
VZ200 • VZ205 • VZ250 • VZ300 386
UNITÀ DI TRASMISSIONE 277

SISTEMA DI PROPULSIONE 401

ELICHE ALUMINIO E INOX DA 3 E 4 PALE 401
ELICHE ALLUMINIO E INOX DA 3 E 4 PALE 402
ELICHE PER MOZZO INTERCAMBIABILE 405
GUIDA ELICHE CON MOZZO 404
GUIDA RICAMBIO ELICHE 405
MOZZO INTERCAMBIABILE 405
REF --> RO 406
RO --> REF 420

FR

GUIDE MAINTENANCE KITS 64

SYSTÈME D'ALIMENTATION ET DE FILTRATION 74

ACCELERATEUR 101
TIGE LEVIER ACCELERATEUR 101
CARBURATEUR 91
ATTACHE TIGE D'ACCELERATEUR 100
AXE DE FLOTTEUR 99
CARBURATEUR COMPLET 91
CLAPET D'ADMISSION 99
FILTRE DU CARBURATEUR 101
FLOTTEUR DE CARBURATEUR 100
GUIDE DES CARBURATEURS 93
JOINTS DE CARBURATEUR 94
KIT CARBURATEUR 95
KIT DE 3 CARBURATEURS 92
SIEGE, POINTEAU ET GICLEUR 98
VIS DE CARBURATEUR 98
COMPOSANTS ET CONNECTEURS DU RÉSERVOIR 75
BOUCHON AVEC EVENT 75
BOUCHON 75
COMMUTATEUR D'HUILE AVEC BOUTON 76
FILTRE 76
PASSE-CLOISON 77
RACCORDS DE RESERVOIR 76
RESSORT DE SECURITÉ POUR LE BOUCHON 75
TUBE D'ASPIRATION POUR RESERVOIR 76

FILTRE À ESSENCE ET CARTOUCHE DE RECHANGE 77
CLÉ À FILTRE 79
FILTRE À ESSENCE 77
FILTRE À ESSENCE EN LIGNE 80
FILTRE SÉPARATEUR D'ESSENCE 78
FILTRE VST 82
GUIDE FILTRE À ESSENCE 81
GUIDE FILTRES VST 82
RACCORD EN LAITON 79
TÊTE DE FILTRE À ESSENCE 77
FILTRE À HUILE 83
GUIDE FILTRE A HUILE 83
HUILES 84
INJECTEURS 89
GUIDE INJECTEURS ET SONDES 90
INJECTEUR 89
POIRE À CARBURANT 74
COLLIER 75
POIRE À CARBURANT 74
RACCORD COUPLEUR 75
RESSORT, TUYAU DE CARBURANT 75
TUYAU CARBURANT 74
POMPE À ESSENCE 85
POMPE À ESSENCE ELECTTRIQUE 86
POMPE À ESSENCE MECANIQUE 85
JOINTS VST 88
MEMBRANES ET JOINTS 87
REGULATEUR DE PRESSION D'ESSENCE 89
POMPE D'INJECTION D'HUILE 84

SYSTÈME ÉLECTRIQUE 102

BOBINES 104
BOBINE D'ALLUMAGE 104
BOBINE D'ÉCLAIRAGE 104
BOBINE DE CHARGE 106
BOBINE PULSEUR 107
BOBINE T.C.I. 106
BOUGIES 108
CDI ET BOITIER ELECTRONIQUE 117
CONTACTEUR A CLÉ 113
AVEC STARTER 114
CONTACTEUR A CLÉ COMPLET 114
MONTAGE POUR BOITIER DE COMMANDE 113
MONTAGE POUR TABLEAU DE BORD 113
POUR INSTALLATION DOUBLE 113
CAPTEURS 102
CAPTEUR D'ACCELERATEUR TS 103
CAPTEUR DE TEMPERATURE 103
CAPTEUR MAP 102
CAPTEUR TPS 102
SONDE À OXYGENE 103
SONDE DE PRESSION D'HUILE 103
SONDE IAC 102
COUPE CIRCUIT DE SECURITE 120
KITS 121
DEMARREUR 110
CABLE DE CONNEXION 112
ENTRAÎNEMENT 112
POIGNEE DE LANCEUR 113
RESSORT DE LANCEUR 112
TAMBOUR, POULIE 113
REGULATEURS ET RECTIFIEURS 116
SOLENOIDE RELAIS 114
STARTOR 121
TRIM, TILT & POWER TRIM 122
INTERRUPTEUR DE TRIM 122
INSTALLATION ELECTRIQUE 122
KIT EXTRACTEUR 125
MOTEUR DE TRIM 122
PIECES VERIN DE TRIM 125
POWER TRIM COMPLET 124
VOLANT MOTEUR 109
ÉLECTRIQUE 109
MANUEL SANS DENT 109

SYSTÈME DE DIRECTION 126

BAGUES 133
BOITIER DE COMMANDE 126
BOITIER LATERAL PUSH TO OPEN 126
BOITIER LATERAL 127
BOITIER POUR CONSOLE 127
EMBOUT DE CABLE 127
BRACKET 131
BARRE DE TILT 132
CIRCLIP 132
ETRIER DROIT 131
ETRIER GAUCHE 131
CONNECTEUR 133
GRAISSEUR M6 INOX 316 133
JOINT INFERIEUR DU SUPPORT 132
SUPPORT SILENT BLOCK 132
SUPPORT TOURNANT 131
TUBE SUPPORT CABLE DE DIRECTION 132
TIGE DE CONNEXION ACCELERATEUR 132
CALLE 134
COMMANDE D'INVERSION 134
COMPOSANT (703) 129
BARRE D'ACCOUPLEMENT COMPLETE 131
CÂBLE D'ACCELERATEUR 130
CÂBLES DE COMMANDE 130
CALE POIGNEE DE CONTRÔLE 129
LEVIER DE COMMANDE 129
PLAQUE BOITIER DE COMMANDE 129
POIGNEE DE PAPILLON 131
ROUE D'ACCELERATEUR 129
FAISCEAU ELECTRIQUE 128
FAISCEAU ELECTRIQUE BOITIER CDE (703) 128
RALLONGE FAISCEAU (703/704) 128
INTERRUPTEUR DE CONTRÔLE 127
AVERTISSEUR SONORE (703) 128
BOITIER DE DEMARRAGE 2 MOTEURS 128
COMMUTATEUR DE TRIM (703) 127
TABLEAU DE COMMANDE SIMPLE (704) 128
POIGNEE DE DIRECTION 134
POIGNEE LANCEUR ET DE SERRAGE 134
SILENT BLOC 135

SYSTÈME DE REFROIDISSEMENT 136

ANODES 158
ANODE CANADA METAL 158
ANODE TECNOSEAL 163
COUVERCLE DU ANODE (66M) 168
GUIDE DES ANODES 169
KIT ANODES CANADA METAL 162
KIT ANODES TECNOSEAL 168
GUIDE TURBINES 143
KITS JOINTS 144
POMPE D'EAU 147
CORPS DE POMPE À EAU 147
GUIDE KITS POMPES À EAU 153
GUIDE POMPE À EAU 4T 154
GUIDE POMPE À EAU 2T 155
KIT REPARATION DE POMPE À EAU 150
PLAQUE DE POMPE À EAU 148
THERMOSTAT 136
COUVERCLE DE THERMOSTAT 139
GUIDE DES THERMOSTATS 137
JOINT DE PLAQUE DE REFROIDISSEMENT 140
JOINTS DE THERMOSTAT 138
RESSORT 139
SOUPAPE DE PRESSION DE THERMOSTAT 139
TETINE 139
THERMOSTAT 136
SALT OFF 136

PIECES MOTEUR 170

GUIDE DES COURROIES DE DISTRIBUTION 267
JOINTS DE MOTEUR 4 TEMPS 215
GUIDE JOINTS DE MOTEURS 218
JOINTS DE CULASSE 215
JOINTS DE TÊTE MOTRICE 217
KIT JOINTS DE CULASSE 216
JOINTS DE MOTEUR 2 TEMPS 248
GUIDE JOINTS DE MOTEURS 254
JOINT DE CULASSE 248
JOINTS DE COUVRE CULASSE 255
JOINTS DE TÊTE MOTRICE 252
KITS JOINT DE CULASSE 249
PIECES MOTEURS DE 4 TEMPS 170
F2.5 170
F4 174
F5 • F6 178
F8 181
F9.9 180
F13.5 • F15 182
F20 • F25 190
F30 • F40 196
F50 • F60 202
F70 204
F80 • F100 • F115 208
F150 210
F200 • F225 • F250 212
F300 • F350 214
PIECES MOTEUR 2 TEMPS 220
2 220
4 • 5 221
6 • 8 222
9.9 • 13.5 • 15 226
25 • 30 228
40 232
48 • 55 238
50 • 60 • 70 240
75 • 85 242
100 • 115 • 130 • 140 244
150 • 175 • 200 • 225 246
PISTONS DE 2 TEMPS 262
KIT DE PISTONS 262
GUIDE PISTONS ET SEGMENTS 266
PISTONS DE 4 TEMPS 219
KIT PISTON 219
VILEBREQUIN DE 4 TEMPS 219
GUIDE VILEBREQUIN COMPLET 219
VILEBREQUIN DE 2 TEMPS 256
GUIDE DE BIELLES 260
GUIDE PARTS DE VILEBREQUIN 256
GUIDE ROULEMENTS DE MOTEUR 257
GUIDE VILEBREQUIN COMPLET 256

SYSTÈME D'ECHAPPEMENT ET SYSTÈME D'ADMISSION 268

SYSTÈME D'ADMISSION 273
JOINTS D'ADMISSION 273
SYSTÈME D'ECHAPPEMENT 268
JOINTS D'ECHAPPEMENT 268
JOINTS DE COLLECTEUR ET CARTER D'HUILE 270

EMBASES ET PIECES 277

EMBASE COMPLETE 277
EMBASES DE MOTEUR 4T 277
EMBASES DE MOTEUR 2T 279
PIECES D'EMBASES DE 4 TEMPS 282
F2.5 282
F4 284
F5 286
F6 • F8 • F9.9 288
F13.5 • F15 290
F20 • F25 292
F30 • F40 298
F50 • F60 306
F70 314
F80 • F100 318
F115 • F130 322
F150 • F175 • F200 326
F225 330
F250 • F300 334
F350 340
PIECES D'EMBASES DE 2 TEMPS 342
2 342
4 • 5 344
6 • 8 346
9.9 348
13.5 • 15 350
20 • 25 • 30 352
40 • 50 358
55 368
75 • 85 370
80 • 90 372
115 • 130 374
V6 378
225 • 250 382
VZ200 • VZ205 • VZ250 • VZ300 386
GUIDE PIECES D'EMBASE 387
GUIDE ROULEMENTS D'EMBASE 393

SYSTÈME DE PROPULSION 401

HELICE ALUMINIUM ET INOX 3 ET 4 PALES 401
GUIDE DES HELICES ET MOYEUX 402
GUIDE DES PIECES POUR HELICE 405
HELICES AVEC MOYEU INTERCHANGEABLE 404
MOYEU INTERCHANGEABLE 405
REF --> RO 406
RO --> REF 420

GUÍA KITS MANTENIMIENTO — MAINTENANCE GUIDE & KITS — GUIDA MANUTENZIONE E KIT — GUIDE MAINTENANCE KITS

	KIT	REF					
F2.5 A (2002-14)	RECKITF2.5A	NGKBR6HS	BUJÍA	SPARK PLUG	CANDELE	BOUGIE	1
		PAF4-04070003	ÁNODO	ANODE	ANODO	ANODE	1
		PAF4-04000011	JUNTA	GASKET	GUARNIZIONE	JOINT	1
		PAF4-04000006	JUNTA	GASKET	GUARNIZIONE	JOINT	1
		PAF4-04120005	FILTRO COMBUSTIBLE	FUEL FILTER	FILTRO COMBUSTIBILE	FILTRE ESSENCE	1
		REC90430-08020	JUNTA DESAGÜE	DRAIN GASKET	GUARNIZIONE DRENAGGIO	JOINT DE VIDANGE	x 2
		PAF4-03000022	ÁNODO	ANODE	ANODO	ANODE	1
		PAGB/T91-1.6X12	PIN BLOQUEADOR	COTTER PIN	COPPIGLIA	GOUPILLE	1
		PAF2.6-03000013	PIN	PIN	PIN	PIN	1
		PAF2.6-03000100	TURBINA	IMPELLER	GIRANTE	TURBINE	1
		PAJASOF404-19-033	TÓRICA	O-RING	O-RING	JOINT TORIQUE	1
F2.5 B (2015+)	RECKITF2.5B	NGKCR6HSB	BUJÍA	SPARK PLUG	CANDELE	BOUGIE	1
		PAF4-04070003	ANODO	ANODE	ANODO	ANODE	1
		PAF4-04000011	JUNTA	GASKET	GUARNIZIONE	JOINT	1
		PAF4-04000006	JUNTA	GASKET	GUARNIZIONE	JOINT	1
		PAF4-04120005	FILTRO COMBUSTIBLE	FUEL FILTER	FILTRO COMBUSTIBILE	FILTRE ESSENCE	1
		REC90430-08020	JUNTA DESAGÜE	DRAIN GASKET	GUARNIZIONE DRENAGGIO	JOINT DE VIDANGE	x 2
		PAF4-03000022	ÁNODO	ANODE	ANODO	ANODE	1
		PAGB/T91-1.6X12	PIN BLOQUEADOR	COTTER PIN	COPPIGLIA	GOUPILLE	1
		PAF2.6-03000013	PIN	PIN	PIN	PIN	1
		PAF2.6-03000100	TURBINA	IMPELLER	GIRANTE	TURBINE	1
F4 A (1998-09)	RECKITF4A	NGKBR6HS	BUJÍA	SPARK PLUG	CANDELE	BOUGIE	1
		PAF4-04070003	ANODO	ANODE	ANODO	ANODE	1
		PAF4-04000011	JUNTA	GASKET	GUARNIZIONE	JOINT	1
		PAF4-03000018	JUNTA	GASKET	GUARNIZIONE	JOINT	1
		PAF4-05000300	FILTRO COMBUSTIBLE	FUEL FILTER	FILTRO COMBUSTIBILE	FILTRE ESSENCE	1
		REC90430-08020	JUNTA DESAGÜE	DRAIN GASKET	GUARNIZIONE DRENAGGIO	JOINT DE VIDANGE	x 2
		PAF4-03000022	ÁNODO	ANODE	ANODO	ANODE	1
		PAGB/T91-1.6X12	PIN BLOQUEADOR	COTTER PIN	SPINOTTO	PIN	1
		PAF4-03000016	PIN	PIN	PIN	PIN	1
		PAF4-03060000	TURBINA	IMPELLER	GIRANTE	TURBINE	1
		PAF4-04000030	MUELLE DEL TUBO DE COMBUTIBLE	CLAMP	MOLLA TUBO COMBUSTIBILE	COLLIER TUYAU DE CARBURANT	x 2
		PAF4-04000006	JUNTA	GASKET	GUARNIZIONE	JOINT	1
F4 B/ F5 A (2010+)	RECKITF5A	NGKCR6HSB	BUJÍA	SPARK PLUG	CANDELE	BOUGIE	1
		PAF4-04070003	ANODO	ANODE	ANODO	ANODE	1
		PAF4-04000011	JUNTA	GASKET	GUARNIZIONE	JOINT	1
		PAF4-03000018	JUNTA	GASKET	GUARNIZIONE	JOINT	1
		REC68T-24251-00	FILTRO COMBUSTIBLE	FUEL FILTER	FILTRO COMBUSTIBILE	FILTRE ESSENCE	1
		REC90430-08020	JUNTA DESAGÜE	DRAIN GASKET	GUARNIZIONE DRENAGGIO	JOINT DE VIDANGE	x 2
		PAF4-03000022	ÁNODO	ANODE	ANODO	ANODE	1
		PAGB/T91-1.6X12	PIN BLOQUEADOR	COTTER PIN	COPPIGLIA	GOUPILLE	1
		PAF4-03000016	PIN	PIN	PIN	PIN	1
		PAF4-03060000	TURBINA	IMPELLER	GIRANTE	TURBINE	1
		PAF4-04000030	MUELLE DEL TUBO DE COMBUTIBLE	SPRING, FUEL PIPE	MOLLA TUBO COMBUSTIBILE	COLLIER TUYAU DE CARBURANT	x 2
		PAF4-04000006	JUNTA	GASKET	GUARNIZIONE	JOINT	1
F6 A/B (2000-09) F8 C (2000+) F8F (2015+) F9.9F (2008-12) F9.9J (2013+)	RECKITF6A	NGKBR6HS-10	BUJÍA	SPARK PLUG	CANDELE	BOUGIE	x 2
		PAF4-04070003	ANODO	ANODE	ANODO	ANODO	1
		PAJASOF40431-025	TÓRICA	O-RING	O-RING	JOINT TORIQUE	1
		PAGB/T3452.1-13X2	TÓRICA	O-RING	O-RING	JOINT TORIQUE	1
		REC68T-24251-00	FILTRO COMBUSTIBLE	FUEL FILTER	FILTRO COMBUSTIBILE	FILTRE ESSENCE	1
		PAF4-04000030	MUELLE DEL TUBO DE COMBUSTIBLE	SPRING, FUEL PIPE	MOLLA TUBO COMBUSTIBILE	COLLIER TUYAU DE CARBURANT	x 2
		REC09168-12017	ARANDELA	WHASER	RONDELLA	RONDELLE	1
		CM68T-45251-00A	ANODO	ANODE	ANODO	ANODO	1
		REC90430-08020	JUNTA DESAGÜE	DRAIN GASKET	GUARNIZIONE DRENAGGIO	JOINT DE VIDANGE	x 2
		REC91490-30025	PIN BLOQUEADOR	COTTER PIN	COPPIGLIA	GOUPILLE	1
		REC68T-W0078-00	KIT BOMBA DE AGUA	WATER PUMP REPAIR KIT	KIT POMPA DELL'ACQUA	KIT POMPE À EAU	1
F6C (2010+)	RECKITF6C	NGKCR6HSB	BUJÍA	SPARK PLUG	CANDELE	BOUGIE	1
		PAF4-04000011	JUNTA	GASKET	GUARNIZIONE	JOINT	1
		PAF4-04070003	ANODO	ANODE	ANODO	ANODO	1
		REC68T-24251-00	FILTRO COMBUSTIBLE	FUEL FILTER	FILTRO COMBUSTIBILE	FILTRE ESSENCE	1
		REC90430-08020	JUNTA DESAGÜE	DRAIN GASKET	GUARNIZIONE DRENAGGIO	JOINT DE VIDANGE	x 2
		CM6L5-45251-02A	ANODO	ANODE	ANODO	ANODO	1
		PAF4-04000006	JUNTA	GASKET	GUARNIZIONE	JOINT	1
		PAJASOF40431-025	TÓRICA	O-RING	O-RING	JOINT TORIQUE	1
		PAF4-03000018	JUNTA	GASKET	GUARNIZIONE	JOINT	1
		PAF4-03060000	TURBINA	IMPELLER	GIRANTE	TURBINE	1
		PAF4-03000016	PIN	PIN	PIN	PIN	1
		PAGB/T91-1.6X12	PIN BLOQUEADOR	COTTER PIN	COPPIGLIA	GOUPILLE	1

	KIT	REF					
FT8 D/G (2001-14) FT9.9G (2008-12) FT9.9J (2013 +)	RECKITFT8D	NGKBR6HS-10	BUJÍA	SPARK PLUG	CANDELE	BOUGIE	x 2
		PAF4-04070003	ANODO	ANODE	ANODO	ANODO	1
		PAJASOF40431-025	TÓRICA	O-RING	O-RING	JOINT TORIQUE	1
		PAGB/T3452.1-13X2	TÓRICA	O-RING	O-RING	JOINT TORIQUE	1
		REC68T-24251-00	FILTRO COMBUSTIBLE	FUEL FILTER	FILTRO COMBUSTIBILE	FILTRE ESSENCE	1
		PAF4-04000030	MUELLE DEL TUBO DE COMBUSTIBLE	SPRING, FUEL PIPE	MOLLA TUBO COMBUSTIBILE	COLLIER TUYAU DE CARBURANT	x 2
		REC09168-12017	ARANDELA	WHASER	RONDELLA	RONDELLE	1
		CM68T-45251-00A	ANODO	ANODE	ANODO	ANODO	1
		REC90430-08020	JUNTA DESAGÜE	DRAIN GASKET	GUARNIZIONE DRENAGGIO	JOINT DE VIDANGE	x 2
		REC91490-30025	PIN BLOQUEADOR	COTTER PIN	COPPIGLIA	GOUPILLE	1
		CM61N-45251-01A	ANODO	ANODE	ANODO	ANODO	1
		REC68T-W0078-00	KIT BOMBA DE AGUA	WATER PUMP REPAIR KIT	KIT POMPA DELL'ACQUA	KIT POMPE À EAU	1
		CM6E0-45251-11A	ANODO	ANODE	ANODO	ANODO	1
F9.9C (1998-08) F15A (1998-07)	RECKITF9.9C	REC5GH-13440-00	FILTRO DE ACEITE	OIL FILTER	FILTRO OLIO	FILTRE D'HUILE	1
		CM66M-11325-00A	ANODO	ANODE	ANODO	ANODE	1
		PAF15-07010009	ALOJAMIENTO DEL ÁNODO	SEAL ANODE	ALLOGGIAMENTO ANODO	JOINT D'ANODE	1
		CM15026A	ANODO	ANODE	ANODO	ANODE	1
		PAF15-07010018	JUNTA	GASKET	GUARNIZIONE	JOINT	1
		PAJASOF40431-025	TÓRICA	O-RING	O-RING	JOINT TORIQUE	1
		NGKDPR6EA-9	BUJÍA	SPARK PLUG	CANDELE	BOUGIE	x 2
		REC61N-24563-10	FILTRO COMBUSTIBLE	FUEL FILTER	FILTRO COMBUSTIBILE	FILTRE ESSENCE	1
		PAGB/T3452.1-32.5X1.8	ARANDELA	WHASER	RONDELLA	RONDELLE	1
		PAF15-04000003	ARANDELA	WHASER	RONDELLA	RONDELLE	1
		REC90430-08020	JUNTA DESAGÜE	DRAIN GASKET	GUARNIZIONE DRENAGGIO	JOINT DE VIDANGE	x 2
		CM61N-45251-01A	ANODO	ANODE	ANODO	ANODO	1
		TEN01136	ANODO	ANODE	ANODO	ANODO	1
		REC91490-30025	PIN BLOQUEADOR	COTTER PIN	COPPIGLIA	GOUPILLE	1
		REC63V-W0078-01	KIT BOMBA DE AGUA	WATER PUMP REPAIR KIT	KIT POMPA DELL'ACQUA	KIT POMPE À EAU	1
		CM6E0-45251-11A	ANODO	ANODE	ANODO	ANODO	1
F15C (2007+)	RECKITF15C	CM6G8-11325-00A	ANODO	ANODE	ANODO	ANODO	x 3
		PAF20-05000702	JUNTA	GASKET	GUARNIZIONE	JOINT	1
		PAGB/T3452.1-13X2	JUNTA	GASKET	GUARNIZIONE	JOINT	1
		REC5GH-13440-60	FILTRO DE ACEITE	OIL FILTER	FILTRO OLIO	FILTRE D'HUILE	1
		PAJASOF40431-025	TÓRICA	O-RING	O-RING	JOINT TORIQUE	1
		NGKDPR6EB-9	BUJÍA	SPARK PLUG	CANDELE	BOUGIE	x 2
		PAF15-07010018	JUNTA	GASKET	GUARNIZIONE	JOINT	1
		REC93210-32738	TÓRICA	O-RING	O-RING	JOINT TORIQUE	1
		CM6E0-45251-11A	ANODO	ANODE	ANODO	ANODO	1
		PAF15-04000003	JUNTA	GASKET	GUARNIZIONE	JOINT	1
		TEN01154AL	ANODO	ANODE	ANODO	ANODO	1
		REC91490-30025	PIN BLOQUEADOR	COTTER PIN	COPPIGLIA	GOUPILLE	1
		REC90430-08020	JUNTA DESAGÜE	DRAIN GASKET	GUARNIZIONE DRENAGGIO	JOINT DE VIDANGE	x 2
		REC6AH-W0078-00	KIT BOMBA DE AGUA	WATER PUMP REPAIR KIT	KIT POMPA DELL'ACQUA	KIT POMPE À EAU	1
		REC61N-24563-10	FILTRO COMBUSTIBLE	FUEL FILTER	FILTRO COMBUSTIBILE	FILTRE	1
F20A (1998-09)	RECKITF20A	REC5GH-13440-00	FILTRO DE ACEITE	OIL FILTER	FILTRO OLIO	FILTRE D'HUILE	1
		CM62Y-11325-00A	ANODO	ANODE	ANODO	ANODE	x 2
		PAF15-07010009	ALOJAMIENTO DEL ÁNODO	SEAL ANODE	ALLOGGIAMENTO ANODO	JOINT D'ANODE	x 2
		PAJASOF40431-025	TÓRICA	O-RING	O-RING	JOINT TORIQUE	1
		REC40145	FILTRO COMBUSTIBLE	FUEL FILTER	FILTRO COMBUSTIBILE	FILTRE ESSENCE	1
		PAF4-04000030	MUELLE DEL TUBO DE COMBUTIBLE	SPRING, FUEL PIPE	MOLLA TUBO COMBUSTIBILE	COLLIER, TUYAU DE CARBURANT	x 2
		CM6E0-45251-11A	ANODO	ANODE	ANODO	ANODO	1
		PAF15-04000003	ARANDELA	WHASER	RONDELLA	RONDELLE	1
		CM61N-45251-01A	ANODO	ANODE	ANODO	ANODO	1
		REC90430-08020	JUNTA DESAGÜE	DRAIN GASKET	GUARNIZIONE DRENAGGIO	JOINT DE VIDANGE	x 2
		PAGB/T91-1.6X12	PIN BLOQUEADOR	COTTER PIN	COPPIGLIA	GOUPILLE	1
		NGKDPR6EA-9	BUJÍA	SPARK PLUG	CANDELE	BOUGIE	x 2
		REC61N-W0078-11	KIT BOMBA DE AGUA	WATER PUMP REPAIR KIT	KIT POMPA DELL'ACQUA	KIT POMPE À EAU	1
F20B (2007+)	RECKITF20B	PAF4-04070003	ANODO	ANODE	ANODO	ANODO	x 3
		REC6AH-12411-00	TERMOSTATO	THERMOSTAT	TERMOSTATO	THERMOSTAT	1
		PAF20-05000702	JUNTA	GASKET	GUARNIZIONE	JOINT	1
		CM15026A	ANODO	ANODE	ANODO	ANODO	1
		REC5GH-13440-60	FILTRO DE ACEITE	OIL FILTER	FILTRO OLIO	FILTRE D'HUILE	1
		NGKDPR6EB-9	BUJÍA	SPARK PLUG	CANDELE	BOUGIE	x 2
		REC61N-24563-10	FILTRO COMBUSTIBLE	FUEL FILTER	FILTRO COMBUSTIBILE	FILTRE ESSENCE	1
		REC93210-32738	TÓRICA	O-RING	O-RING	JOINT TORIQUE	1
		PAF15-04000003	ARANDELA	WHASER	RONDELLA	RONDELLE	1
		REC90430-08020	JUNTA DESAGÜE	DRAIN GASKET	GUARNIZIONE DRENAGGIO	JOINT DE VIDANGE	x 2
		TEN01154AL	ANODO	ANODE	ANODO	ANODO	1
		REC6AH-W0078-00	KIT BOMBA DE AGUA	WATER PUMP REPAIR KIT	KIT POMPA DELL'ACQUA	KIT POMPE À EAU	1

	KIT	REF					
F25A (1998-09)	RECKITF25A	REC5GH-13440-00	FILTRO DE ACEITE	OIL FILTER	FILTRO OLIO	FILTRE À HUILE	1
		PAF15-07000031	TERMOSTATO	THERMOSTAT	TERMOSTATO	THERMOSTAT	1
		PAF15-07010022	JUNTA	GASKET	GUARNIZIONE	JOINT	1
		CM62Y-11325-00A	ANODO	ANODE	ANODO	ANODO	x 3
		PAF15-07010009	ALOJAMIENTO DEL ÁNODO	SEAL ANODE	ALLOGGIAMENTO ANODO	JOINT D'ANODE	x 2
		REC61N-24563-10	FILTRO COMBUSTIBLE	FUEL FILTER	FILTRO COMBUSTIBILE	FILTRE ESSENCE	1
		REC93210-32738	TÓRICA	O-RING	O-RING	JOINT TORIQUE	1
		NGKDPR6EA-9	BUJÍA	SPARK PLUG	CANDELE	BOUGIE	x 2
		CM6E0-45251-11A	ANODO	ANODE	ANODO	ANODO	1
		PAF15-04000003	ARANDELA	WHASER	RONDELLA	RONDELLE	1
		CM61N-45251-01A	ANODO	ANODE	ANODO	ANODO	1
		REC90430-08020	JUNTA DESAGÜE	DRAIN GASKET	GUARNIZIONE DRENAGGIO	JOINT DE VIDANGE	x 2
		PAGB/T91-1.6X12	PIN BLOQUEADOR	COTTER PIN	COPPIGLIA	GOUPILLE	1
		REC61N-W0078-11	KIT BOMBA DE AGUA	WATER PUMP REPAIR KIT	KIT POMPA DELL'ACQUA	KIT POMPE À EAU	1
FT25B (2000-09)	RECKITFT25B	REC5GH-13440-00	FILTRO DE ACEITE	OIL FILTER	FILTRO OLIO	FILTRE À HUILE	1
		PAF15-07000031	TERMOSTATO	THERMOSTAT	TERMOSTATO	THERMOSTAT	1
		PAF15-07010022	JUNTA	GASKET	GUARNIZIONE	JOINT	1
		CM62Y-11325-00A	ANODO	ANODE	ANODO	ANODO	x 3
		PAF15-07010009	ALOJAMIENTO DEL ÁNODO	SEAL ANODE	ALLOGGIAMENTO ANODO	JOINT D'ANODE	x 2
		REC61N-24563-10	FILTRO COMBUSTIBLE	FUEL FILTER	FILTRO COMBUSTIBILE	FILTRE ESSENCE	1
		REC93210-32738	TÓRICA	O-RING	O-RING	JOINT TORIQUE	1
		NGKDPR6EA-9	BUJÍA	SPARK PLUG	CANDELE	BOUGIE	x 2
		CM6E0-45251-11A	ANODO	ANODE	ANODO	ANODO	1
		PAF15-04000003	ARANDELA	WHASER	RONDELLA	RONDELLE	1
		CM67C-45371-00A	ANODO	ANODE	ANODO	ANODO	1
		REC90430-08020	JUNTA DESAGÜE	DRAIN GASKET	GUARNIZIONE DRENAGGIO	JOINT DE VIDANGE	x 2
		PAGB/T91-1.6X12	PIN BLOQUEADOR	COTTER PIN	COPPIGLIA	GOUPILLE	1
		REC66T-W0078-00	KIT BOMBA DE AGUA	WATER PUMP REPAIR KIT	KIT POMPA DELL'ACQUA	KIT POMPE À EAU	1
		CM67C-45251-00A	ANODO	ANODE	ANODO	ANODO	1
F25 G (2017+)	RECKITF25G	PAF4-04070003	ANODO	ANODE	ANODO	ANODE	x 4
		REC6FM-12411-00	TERMOSTATO	THERMOSTAT	TERMOSTATO	THERMOSTAT	1
		REC5GH-13440-60	FILTRO ACEITE	OIL FILTER	FILTRO OLIO	FILTRO À HUILE	1
		NGKDPR6EB-9	BUJÍA	SPARK PLUG	CANDELE	BOUGIE	x 2
		REC6D8-WS24A-00	FILTRO COMBUSTIBLE	FUEL FILTER	FILTRO COMBUSTIBILE	FILTRE ESSENCE	1
		PAGB/T3452.1-32.5X1.8	TÓRICA	O-RING	O-RING	JOINT TORIQUE	1
		PAF4-04000006	ARANDELA	WHASER	RONDELLA	RONDELLE	1
		PAF15-04000003	ARANDELA	WHASER	RONDELLA	RONDELLE	1
		CM6E5-45251-00A	ANODO	ANODE	ANODO	ANODE	1
		CM664-45371-01A	ANODO	ANODE	ANODO	ANODE	1
		REC90430-08020	JUNTA DESAGÜE	DRAIN GASKET	GUARNIZIONE DRENAGGIO	JOINT DE VIDANGE	x 2
		PAF25-04050004	GOMA SELLO DE AGUA	DAMPER WATER PIPE	AMMORTIZZATORE, TUBO DELL'ACQUA	MANCHON TUYAU D'EAU	1
		REC6L2-44352-00	TURBINA	IMPELLER	GIRANTE	TURBINE	1
		PAF25-04050003	TÓRICA	O-RING	O-RING	JOINT TORIQUE	1
		PAGB/T91-1.6X12	PIN BLOQUEADOR	COTTER PIN	COPPIGLIA	GOUPILLE	1
F25D (2009+)	RECKITF25D	PAF15-07000031	TERMOSTATO	THERMOSTAT	TERMOSTATO	THERMOSTAT	1
		PAF15-07010022	JUNTA	GASKET	GUARNIZIONE	JOINT	1
		PAF4-04070003	ANODO	ANODE	ANODO	ANODE	1
		REC5GH-13440-60	FILTRO ACEITE	OIL FILTER	FILTRO OLIO	FILTRE À HUILE	1
		CM6BL-11325-00A	ANODO	ANODE	ANODO	ANODE	x 2
		NGKDPR6EB-9	BUJÍA	SPARK PLUG	CANDELE	BOUGIE	x 2
		REC61N-24563-10	FILTRO COMBUSTIBLE	FUEL FILTER	FILTRO COMBUSTIBILE	FILTRE ESSENCE	1
		PAGB/T3452.1-32.5X1.8	TÓRICA	O-RING	O-RING	JOINT TORIQUE	1
		CM62Y-11325-00A	ANODO	ANODE	ANODO	ANODE	1
		PAF15-04000003	ARANDELA	WHASER	RONDELLA	RONDELLE	1
		REC90430-08020	JUNTA DESAGÜE	DRAIN GASKET	GUARNIZIONE DRENAGGIO	JOINT DE VIDANGE	x 2
		CM61N-45251-01A	ANODO	ANODE	ANODO	ANODE	1
		REC61N-W0078-11	KIT BOMBA DE AGUA	WATER PUMP REPAIR KIT	KIT POMPA DELL'ACQUA	KIT POMPE À EAU	1
		PAGB/T91-1.6X12	PIN BLOQUEADOR	COTTER PIN	COPPIGLIA	GOUPILLE	1
FT25F (2009+)	RECKITFT25F	PAF15-07000031	TERMOSTATO	THERMOSTAT	TERMOSTATO	THERMOSTAT	1
		PAF15-07010022	JUNTA	GASKET	GUARNIZIONE	JOINT	1
		PAF4-04070003	ANODO	ANODE	ANODO	ANODE	1
		REC5GH-13440-60	FILTRO ACEITE	OIL FILTER	FILTRO OLIO	FILTRE À HUILE	1
		CM6BL-11325-00A	ANODO	ANODE	ANODO	ANODE	x 2
		NGKDPR6EB-9	BUJÍA	SPARK PLUG	CANDELE	BOUGIE	x 2
		REC61N-24563-10	FILTRO COMBUSTIBLE	FUEL FILTER	FILTRO COMBUSTIBILE	FILTRE ESSENCE	1
		PAGB/T3452.1-32.5X1.8	TÓRICA	O-RING	O-RING	JOINT TORIQUE	1
		CM6E0-45251-11A	ANODO	ANODE	ANODO	ANODE	1
		CM62Y-11325-00A	ANODO	ANODE	ANODO	ANODE	1
		PAF15-04000003	ARANDELA	WHASER	RONDELLA	RONDELLE	1
		REC90430-08020	JUNTA DESAGÜE	DRAIN GASKET	GUARNIZIONE DRENAGGIO	JOINT DE VIDANGE	x 2
		CM67C-45371-00A	ANODO	ANODE	ANODO	ANODE	
		PAGB/T91-1.6X12	PIN BLOQUEADOR	COTTER PIN	COPPIGLIA	GOUPILLE	1
		CM67C-45251-00A	ANODO	ANODE	ANODO	ANODE	1
		REC66T-W0078-00	KIT BOMBA DE AGUA	WATER PUMP REPAIR KIT	KIT POMPA DELL'ACQUA	KIT POMPE À EAU	1

	KIT	REF					
F30A (2001-09)	RECKITF30A	PAF15-07000031	TERMOSTATO	THERMOSTAT	TERMOSTATO	THERMOSTAT	1
		PAF15-07010022	JUNTA	GASKET	GUARNIZIONE	JOINT	1
		NGKDPR6EA-9	BUJÍA	SPARK PLUG	CANDELE	BOUGIE	x 3
		REC5GH-13440-00	FILTRO ACEITE	OIL FILTER	FILTRO OLIO	FILTRE À HUILE	1
		CM62Y-11325-00A	ANODO	ANODE	ANODO	ANODE	x 4
		PAF15-07010009	ALOJAMIENTO DEL ANODO	SEAL ANODE	ALLOGGIAMENTO ANODO	JOINT D'ANODE	x 4
		REC40145	FILTRO COMBUSTIBLE	FUEL FILTER	FILTRO COMBUSTIBILE	FILTRE ESSENCE	1
		PAF4-04000030	MUELLE DEL TUBO DE COMBUTIBLE	SPRING, FUEL PIPE	MOLLA TUBO COMBUSTIBILE	COLLIER TUYAU DE CARBURANT	x 2
		CM688-45251-01A	ANODO	ANODE	ANODO	ANODE	1
		PAF15-04000003	ARANDELA	WHASER	RONDELLA	RONDELLE	1
		REC90430-08020	JUNTA DESAGÜE	DRAIN GASKET	GUARNIZIONE DRENAGGIO	JOINT DE VIDANGE	x 2
		CM67C-45251-00A	ANODO	ANODE	ANODO	ANODE	1
		CM67C-45371-00A	ANODO	ANODE	ANODO	ANODE	1
		REC91490-30025	PIN BLOQUEADOR	COTTER PIN	COPPIGLIA	GOUPILLE	1
		REC66T-W0078-00	KIT BOMBA DE AGUA	WATER PUMP REPAIR KIT	KIT POMPA DELL'ACQUA	KIT POMPE À EAU	1
F30B (2009+) F40F (2009+)	RECKITF30B	PAF15-07000031	TERMOSTATO	THERMOSTAT	TERMOSTATO	THERMOSTAT	1
		PAF15-07010022	JUNTA	GASKET	GUARNIZIONE	JOINT	1
		PAF4-04070003	ANODO	ANODE	ANODO	ANODE	x 4
		REC5GH-13440-60	FILTRO DE ACEITE	OIL FILTER	FILTRO OLIO	FILTRE À HUILE	1
		NGKDPR6EB-9	BUJÍA	SPARK PLUG	CANDELE	BOUGIE	x 3
		REC6BG-13915-00	FILTRO COMBUSTIBLE VST	FUEL FILTER VST	FILTRO COMBUSTIBILE VST	FILTRE ESSENCE VST	1
		REC6C5-24251-00	FILTRO COMBUSTIBLE	FUEL FILTER	FILTRO COMBUSTIBILE	FILTRE ESSENCE	1
		REC6D8-WS24A-00	FILTRO COMBUSTIBLE	FUEL FILTER	FILTRO COMBUSTIBILE	FILTRE ESSENCE	1
		PAGB/T3452.1-32.5X1.8	TÓRICA	O-RING	O-RING	JOINT TORIQUE	1
		CM6E0-45251-11A	ANODO	ANODE	ANODO	ANODE	1
		CM688-45251-01A	ANODO	ANODE	ANODO	ANODE	1
		CM62Y-11325-00A	ANODO	ANODE	ANODO	ANODE	1
		PAF15-04000003	ARANDELA	WHASER	RONDELLA	RONDELLE	1
		REC90430-08020	JUNTA DESAGÜE	DRAIN GASKET	GUARNIZIONE DRENAGGIO	JOINT DE VIDANGE	x 2
		CM67C-45371-00A	ANODO	ANODE	ANODO	ANODE	1
		CM67C-45251-00A	ANODO	ANODE	ANODO	ANODE	1
		REC6BG-W0078-00	KIT BOMBA DE AGUA	WATER PUMP REPAIR KIT	KIT POMPA DELL'ACQUA	KIT POMPE À EAU	1
		REC91490-30025	PIN BLOQUEADOR	COTTER PIN	SPINOTTO	PIN	1
F40B (2000-09)	RECKITF40B	PAF15-07000031	TERMOSTATO	THERMOSTAT	TERMOSTATO	THERMOSTAT	1
		PAF15-07010022	JUNTA	GASKET	GUARNIZIONE	JOINT	1
		REC3FV-13440-00	FILTRO DE ACEITE	OIL FILTER	FILTRO OLIO	FILTRE À HUILE	1
		CM62Y-11325-00A	ANODO	ANODE	ANODO	ANODE	x 3
		PAF15-07010009	ALOJAMIENTO DEL ANODO	SEAL ANODE	ALLOGGIAMENTO ANODO	JOINT D'ANODE	x 3
		NGKDPR6EA-9	BUJÍA	SPARK PLUG	CANDELE	BOUGIE	x 3
		REC40145	FILTRO COMBUSTIBLE	FUEL FILTER	FILTRO COMBUSTIBILE	FILTRE ESSENCE	1
		PAF4-04000030	MUELLE DEL TUBO DE COMBUTIBLE	SPRING, FUEL PIPE	MOLLA TUBO COMBUSTIBILE	COLLIER TUYAU DE CARBURANT	x 2
		CM688-45251-01A	ANODO	ANODE	ANODO	ANODE	1
		CM6E0-45251-11A	ANODO	ANODE	ANODO	ANODE	1
		PAF15-04000003	ARANDELA	WHASER	RONDELLA	RONDELLE	1
		REC90430-08020	JUNTA DESAGÜE	DRAIN GASKET	GUARNIZIONE DRENAGGIO	JOINT DE VIDANGE	x 2
		CM67C-45371-00A	ANODO	ANODE	ANODO	ANODE	1
		CM67C-45251-00A	ANODO	ANODE	ANODO	ANODE	1
		REC91490-30025	PIN BLOQUEADOR	COTTER PIN	COPPIGLIA	GOUPILLE	1
		REC66T-W0078-00	KIT BOMBA DE AGUA	WATER PUMP REPAIR KIT	KIT POMPA DELL'ACQUA	KIT POMPE À EAU	1
F50A (1991-07)	RECKITF50A	PAF15-07000031	TERMOSTATO	THERMOSTAT	TERMOSTATO	THERMOSTAT	1
		PAF15-07010022	JUNTA	GASKET	GUARNIZIONE	JOINT	1
		PAF4-04070003	ANODO	ANODE	ANODO	ANODO	x 4
		REC5GH-13440-60	FILTRO DE ACEITE	OIL FILTER	FILTRO OLIO	FILTRE À HUILE	1
		NGKDPR6EB-9	BUJÍA	SPARK PLUG	CANDELE	BOUGIE	x 4
		REC6BG-13915-00	FILTRO COMBUSTIBLE VST	FUEL FILTER VST	FILTRO COMBUSTIBILE VST	FILTRE VST	1
		REC6C5-24251-00	FILTRO COMBUSTIBLE	FUEL FILTER	FILTRO COMBUSTIBILE	FILTRE ESSENCE	1
		REC6D8-WS24A-00	FILTRO COMBUSTIBLE	FUEL FILTER	FILTRO COMBUSTIBLE	FILTRE ESSENCE	1
		PAGB/T3452.1-32.5X1.8	TÓRICA	O-RING	O-RING	JOINT TORIQUE	1
		CM6E0-45251-11A	ANODO	ANODE	ANODO	ANODE	1
		CM688-45251-01A	ANODO	ANODE	ANODO	ANODE	1
		CM62Y-11325-00A	ANODO	ANODE	ANODO	ANODE	1
		PAF15-04000003	ARANDELA	WHASER	RONDELLA	RONDELLE	1
		REC90430-08020	JUNTA DESAGÜE	DRAIN GASKET	GUARNIZIONE DRENAGGIO	JOINT DE VIDANGE	x 2
		CM67C-45371-00A	ANODO	ANODE	ANODO	ANODE	1
		CM67C-45251-00A	ANODO	ANODE	ANODO	ANODE	1
		REC6BG-W0078-00	KIT BOMBA DE AGUA	WATER PUMP REPAIR KIT	KIT POMPA DELL'ACQUA	KIT POMPE À EAU	1
		REC91490-30025	PIN BLOQUEADOR	COTTER PIN	COPPIGLIA	GOUPILLE	1

	KIT	REF					
FT50B (1996-02)	RECKITFT50B	PAF15-07000031	TERMOSTATO	THERMOSTAT	TERMOSTATO	THERMOSTAT	1
		PAF15-07010022	JUNTA	GASKET	GUARNIZIONE	JOINT	1
		REC5GH-13440-00	FILTRO DE ACEITE	OIL FILTER	FILTRO OLIO	FILTRE À HUILE	1
		CM62Y-11325-00A	ANODO	ANODE	ANODO	ANODE	x 5
		PAF15-07010009	ALOJAMIENTO DEL ÁNODO	SEAL ANODE	ALLOGGIAMENTO ANODO	JOINT D'ANODE	x 5
		NGKDPR6EA-9	BUJÍA	SPARK PLUG	CANDELE	BOUGIE	x 4
		REC68V-24563-00	FILTRO COMBUSTIBLE	FUEL FILTER	FILTRO COMBUSTIBLE	FILTRE	1
		REC93210-32738	TÓRICA	O-RING	O-RING	JOINT TORIQUE	1
		CM6E0-45251-11A	ANODO	ANODE	ANODO	ANODE	x 3
		PAF15-04000003	ARANDELA	WHASER	RONDELLA	RONDELLE	1
		REC90430-08020	JUNTA DESAGÜE	DRAIN GASKET	GUARNIZIONE DRENAGGIO	JOINT DE VIDANGE	x 2
		CM67F-45371-00A	ANODO	ANODE	ANODO	ANODE	1
		REC91490-40030	PIN BLOQUEADOR	COTTER PIN	COPPIGLIA	GOUPILLE	1
		REC6H3-W0078-02	KIT BOMBA DE AGUA	WATER PUMP REPAIR KIT	KIT POMPA DELL'ACQUA	KIT POMPE À EAU	1
FT50C (2003+)	RECKITFT50C	PAF15-07000031	TERMOSTATO	THERMOSTAT	TERMOSTATO	THERMOSTAT	1
		PAF15-07010022	JUNTA	GASKET	GUARNIZIONE	JOINT	1
		CM62Y-11325-00A	ANODO	ANODE	ANODO	ANODE	x 5
		PAF15-07010009	ALOJAMIENTO DEL ÁNODO	SEAL ANODE	ALLOGGIAMENTO ANODO	JOINT D'ANODE	x 5
		NGKDPR6EA-9	BUJÍA	SPARK PLUG	CANDELE	BOUGIE	x 4
		REC5GH-13440-00	FILTRO DE ACEITE	OIL FILTER	FILTRO OLIO	FILTRE À HUILE	1
		REC61N-24563-10	FILTRO COMBUSTIBLE	FUEL FILTER	FILTRO COMBUSTIBILE	FILTRE ESSENCE	1
		PAGB/T3452.1-32.5X1.8	TÓRICA	O-RING	O-RING	JOINT TORIQUE	1
		CM6E0-45251-11A	ANODO	ANODE	ANODO	ANODE	x 3
		PAF15-04000003	ARANDELA	WHASER	RONDELLA	RONDELLE	1
		REC90430-08020	JUNTA DESAGÜE	DRAIN GASKET	GUARNIZIONE DRENAGGIO	JOINT DE VIDANGE	x 2
		CM67F-45371-00A	ANODO	ANODE	ANODO	ANODE	1
		REC91490-40030	PIN BLOQUEADOR	COTTER PIN	COPPIGLIA	GOUPILLE	1
		REC6H3-W0078-02	KIT BOMBA DE AGUA	WATER PUMP REPAIR KIT	KIT POMPA DELL'ACQUA	KIT POMPE À EAU	1
F50F (2005-12)	RECKITF50F	PAF15-07000031	TERMOSTATO	THERMOSTAT	TERMOSTATO	THERMOSTAT	1
		PAF15-07010022	JUNTA	GASKET	GUARNIZIONE	JOINT	1
		CM62Y-11325-00A	ANODO	ANODE	ANODO	ANODE	x 5
		PAF15-07010009	ALOJAMIENTO DEL ÁNODO	SEAL ANODE	ALLOGGIAMENTO ANODO	JOINT D'ANODE	x 5
		REC5GH-13440-00	FILTRO DE ACEITE	OIL FILTER	FILTRO OLIO	FILTRE À HUILE	1
		NGKDPR6EB-9	BUJÍA	SPARK PLUG	CANDELE	BOUGIE	x 4
		REC6C5-13915-00	FILTRO COMBUSTIBLE VST	FUEL FILTER VST	FILTRO COMBUSTIBILE VST	FILTRE VST	1
		REC6C5-14984-00	TÓRICA VST	VST O-RING	O-RING VST	JOINT TORIQUE VST	1
		REC6C5-24251-00	FILTRO COMBUSTIBLE	FUEL FILTER	FILTRO COMBUSTIBILE	FILTRE ESSENCE	1
		REC68V-24563-00	FILTRO COMBUSTIBLE	FUEL FILTER	FILTRO COMBUSTIBILE	FILTRE ESSENCE	1
		REC93210-32738	TÓRICA	O-RING	O-RING	JOINT TORIQUE	1
		CM6E0-45251-11A	ANODO	ANODE	ANODO	ANODE	x 2
		CM688-45251-01A	ANODO	ANODE	ANODO	ANODE	1
		PAF15-04000003	ARANDELA	WHASER	RONDELLA	RONDELLE	1
		REC90430-08020	JUNTA DESAGÜE	DRAIN GASKET	GUARNIZIONE DRENAGGIO	JOINT DE VIDANGE	x 2
		CM67C-45371-00A	ANODO	ANODE	ANODO	ANODE	1
		CM67C-45251-00A	ANODO	ANODE	ANODO	ANODE	1
		REC91490-30025	PIN BLOQUEADOR	COTTER PIN	COPPIGLIA	GOUPILLE	1
		REC63D-W0078-01	KIT BOMBA DE AGUA	WATER PUMP REPAIR KIT	KIT POMPA DELL'ACQUA	KIT POMPE À EAU	1
FT50G (2005-12) FT50J (2013+) FT60D (2005-12) FT60G (2013+)	RECKITFT50G	PAF15-07000031	TERMOSTATO	THERMOSTAT	TERMOSTATO	THERMOSTAT	1
		PAF15-07010022	JUNTA	GASKET	GUARNIZIONE	JOINT	1
		REC5GH-13440-60	FILTRO DE ACEITE	OIL FILTER	FILTRO OLIO	FILTRE À HUILE	1
		CM62Y-11325-00A	ANODO	ANODE	ANODO	ANODE	1
		PAF15-07010009	ALOJAMIENTO DEL ÁNODO	SEAL ANODE	ALLOGGIAMENTO ANODO	JOINT D'ANODE	1
		NGKDPR6EB-9	BUJÍA	SPARK PLUG	CANDELE	BOUGIE	x 4
		PAF4-04070003	ANODO	ANODE	ANODO	ANODE	x 4
		PAGB/T3452.1-13X2	TÓRICA	O-RING	O-RING	JOINT TORIQUE	x 4
		REC6C5-13915-00	FILTRO COMBUSTIBLE VST	FUEL FILTER VST	FILTRO COMBUSTIBILE VST	FILTRE ESSENCE VST	1
		REC6C5-14984-00	TÓRICA VST	VST O-RING	O-RING VST	JOINT TORIQUE VST	1
		REC6C5-24251-00	FILTRO COMBUSTIBLE	FUEL FILTER	FILTRO COMBUSTIBILE	FILTRE ESSENCE	1
		REC6D8-WS24A-00	FILTRO COMBUSTIBLE	FUEL FILTER	FILTRO COMBUSTIBILE	FILTRE ESSENCE	1
		PAGB/T3452.1-32.5X1.8	TÓRICA	O-RING	O-RING	JOINT TORIQUE	1
		CM6E0-45251-11A	ANODO	ANODE	ANODO	ANODO	x 3
		PAF15-04000003	ARANDELA	WHASER	RONDELLA	RONDELLE	1
		REC90430-08020	JUNTA DESAGÜE	DRAIN GASKET	GUARNIZIONE DRENAGGIO	JOINT DE VIDANGE	x 2
		CM67F-45371-00A	ANODO	ANODE	ANODO	ANODE	1
		REC91490-40030	PIN BLOQUEADOR	COTTER PIN	COPPIGLIA	GOUPILLE	1
		REC6H3-W0078-02	KIT BOMBA DE AGUA	WATER PUMP REPAIR KIT	KIT POMPA DELL'ACQUA	KIT POMPE À EAU	1

	KIT	REF					
F50H (2013+) F60A (2002-07) F60C (2005-12) F60F (2013+)	RECKITF60A	PAF15-07010009	ALOJAMIENTO DEL ANODO	SEAL ANODE	ALLOGGIAMENTO ANODO	JOINT D'ANODE	1
		REC5GH-13440-60	FILTRO DE ACEITE	OIL FILTER	FILTRO OLIO	FILTRE À HUILE	1
		PAF4-04070003	ANODO	ANODE	ANODO	ANODE	x 4
		PAGB/T3452.1-13X2	TÓRICA	O-RING	O-RING	JOINT TORIQUE	x 4
		NGKDPR6EB-9	BUJÍA	SPARK PLUG	CANDELE	BOUGIE	x 4
		REC6C5-13915-00	FILTRO COMBUSTIBLE VST	FUEL FILTER VST	FILTRO COMBUSTIBILE VST	FILTRE VST	1
		REC6C5-14984-00	TÓRICA VST	VST O-RING	O-RING VST	JOINT TORIQUE VST	1
		REC6C5-24251-00	FILTRO COMBUSTIBLE	FUEL FILTER	FILTRO COMBUSTIBILE	FILTRE ESSENCE	1
		REC6D8-WS24A-00	FILTRO COMBUSTIBLE	FUEL FILTER	FILTRO COMBUSTIBILE	FILTRE ESSENCE	1
		REC93210-32738	TÓRICA	O-RING	O-RING	JOINT TORIQUE	1
		CM6E0-45251-11A	ANODO	ANODE	ANODO	ANODE	x 4
		CM688-45251-01A	ANODO	ANODE	ANODO	ANODE	1
		PAF15-04000003	ARANDELA	WHASER	RONDELLA	RONDELLE	1
		REC90430-08020	JUNTA DESAGÜE	DRAIN GASKET	GUARNIZIONE DRENAGGIO	JOINT DE VIDANGE	x 2
		CM67C-45371-00A	ANODO	ANODE	ANODO	ANODE	1
		CM67C-45251-00A	ANODO	ANODE	ANODO	ANODE	1
		REC91490-30025	PIN BLOQUEADOR	COTTER PIN	COPPIGLIA	GOUPILLE	1
		REC63D-W0078-01	KIT BOMBA DE AGUA	WATER PUMP REPAIR KIT	KIT POMPA DELL'ACQUA	KIT POMPE À EAU	1
FT60B (2003-06)	RECKITFT60B	PAF15-07000031	TERMOSTATO	THERMOSTAT	TERMOSTATO	THERMOSTAT	1
		PAF15-07010022	JUNTA	GASKET	GUARNIZIONE	JOINT	1
		CM62Y-11325-00A	ANODO	ANODE	ANODO	ANODE	x 5
		PAF15-07010009	ALOJAMIENTO DEL ANODO	SEAL ANODE	ALLOGGIAMENTO ANODO	JOINT D'ANODE	x 5
		REC5GH-13440-60	FILTRO DE ACEITE	OIL FILTER	FILTRO OLIO	FILTRE À HUILE	1
		NGKDPR5EA-9	BUJÍA	SPARK PLUG	CANDELE	BOUGIE	x 4
		REC61N-24563-10	FILTRO COMBUSTIBLE	FUEL FILTER	FILTRO COMBUSTIBILE	FILTRE ESSENCE	1
		PAGB/T3452.1-32.5X1.8	TÓRICA	O-RING	O-RING	JOINT TORIQUE	1
		CM6E0-45251-11A	ANODO	ANODE	ANODO	ANODE	x 3
		PAF15-04000003	ARANDELA	WHASER	RONDELLA	RONDELLE	1
		REC90430-08020	JUNTA DESAGÜE	DRAIN GASKET	GUARNIZIONE DRENAGGIO	JOINT DE VIDANGE	x 2
		CM67F-45371-00A	ANODO	ANODE	ANODO	ANODE	1
		REC91490-40030	PIN BLOQUEADOR	COTTER PIN	COPPIGLIA	GOUPILLE	1
		REC6H3-W0078-02	KIT BOMBA DE AGUA	WATER PUMP REPAIR KIT	KIT POMPA DELL'ACQUA	KIT POMPE À EAU	1
F70A (2011+)	RECKITF70A	PAF15-07000031	TERMOSTATO	THERMOSTAT	TERMOSTATO	THERMOSTAT	1
		PAF15-07010022	JUNTA	GASKET	GUARNIZIONE	JOINT	1
		CM62Y-11325-00A	ANODO	ANODE	ANODO	ANODE	1
		REC5GH-13440-60	FILTRO DE ACEITE	OIL FILTER	FILTRO OLIO	FILTRE À HUILE	1
		PAF4-04070003	ANODO	ANODE	ANODO	ANODE	x 3
		PAGB/T3452.1-13X2	TÓRICA	O-RING	O-RING	JOINT TORIQUE	x 3
		NGKLKR7E	BUJÍA	SPARK PLUG	CANDELE	BOUGIE	x 4
		REC6C5-13915-00	FILTRO COMBUSTIBLE VST	FUEL FILTER VST	FILTRO COMBUSTIBILE VST	FILTRE ESSENCE VST	1
		REC6C5-24251-00	FILTRO COMBUSTIBLE	FUEL FILTER	FILTRO COMBUSTIBILE	FILTRE ESSENCE	1
		REC6D8-WS24A-00	FILTRO COMBUSTIBLE	FUEL FILTER	FILTRO COMBUSTIBILE	FILTRE ESSENCE	1
		REC93210-32738	TÓRICA	O-RING	O-RING	JOINT TORIQUE	1
		CM6E0-45251-11A	ANODO	ANODE	ANODO	ANODE	x 3
		PAF15-04000003	ARANDELA	WHASER	RONDELLA	RONDELLE	1
		REC90430-08020	JUNTA DESAGÜE	DRAIN GASKET	GUARNIZIONE DRENAGGIO	JOINT DE VIDANGE	x 2
		CM67F-45371-00A	ANODO	ANODE	ANODO	ANODE	1
		REC91490-30025	PIN BLOQUEADOR	COTTER PIN	COPPIGLIA	GOUPILLE	1
		REC6CJ-W0078-00	KIT BOMBA DE AGUA	WATER PUMP REPAIR KIT	KIT POMPA DELL'ACQUA	KIT POMPE À EAU	1
F80A (2000-07) F100A (1997-07)	RECKITF80A	CM68V-11325-01A	ANODO	ANODE	ANODO	ANODE	x 2
		REC5GH-13440-00	FILTRO DE ACEITE	OIL FILTER	FILTRO OLIO	FILTRE À HUILE	1
		REC67F-12411-01	TERMOSTATO	THERMOSTAT	TERMOSTATO	THERMOSTAT	1
		NGKLFR5A-11	BUJÍA	SPARK PLUG	CANDELE	BOUGIE	x 4
		PAJASOF40431-025	TÓRICA	O-RING	O-RING	JOINT TORIQUE	1
		REC61N-24563-10	FILTRO COMBUSTIBLE	FUEL FILTER	FILTRO COMBUSTIBILE	FILTRE ESSENCE	1
		PAGB/T3452.1-32.5X1.8	TÓRICA	O-RING	O-RING	JOINT TORIQUE	1
		CM6H1-45251-02A	ANODO	ANODE	ANODO	ANODE	1
		PAF15-04000003	ARANDELA	WHASER	RONDELLA	RONDELLE	1
		REC91490-40030	PIN BLOQUEADOR	COTTER PIN	COPPIGLIA	GOUPILLE	1
		REC90430-08020	JUNTA DESAGÜE	DRAIN GASKET	GUARNIZIONE DRENAGGIO	JOINT DE VIDANGE	x 2
		REC67F-W0078-00	KIT BOMBA DE AGUA	WATER PUMP REPAIR KIT	KIT POMPA DELL'ACQUA	KIT POMPE À EAU	1

	KIT	REF					
F80B (2005+)	RECKITF80B	CM15026A	ANODO	ANODE	ANODO	ANODE	x 3
		CM67F-11325-01A	ANODO	ANODE	ANODO	ANODE	1
		REC5GH-13440-00	FILTRO DE ACEITE	OIL FILTER	FILTRO OLIO	FILTRE À HUILE	1
		CM67F-11325-01A	ANODO	ANODE	ANODO	ANODE	x 2
		PAJASOF40431-025	TÓRICA	O-RING	O-RING	JOINT TORIQUE	1
		REC67F-12411-01	TERMOSTATO	THERMOSTAT	TERMOSTATO	THERMOSTAT	1
		NGKLFR5A-11	BUJÍA	SPARK PLUG	CANDELE	BOUGIE	x 4
		REC6C5-13915-00	FILTRO COMBUSTIBLE	FUEL FILTER	FILTRO COMBUSTIBILE	FILTRE ESSENCE	1
		REC6C5-24251-00	FILTRO COMBUSTIBLE	FUEL FILTER	FILTRO COMBUSTIBILE	FILTRE ESSENCE	1
		REC6D8-WS24A-00	FILTRO COMBUSTIBLE	FUEL FILTER	FILTRO COMBUSTIBILE	FILTRE ESSENCE	1
		PAGB/T3452.1-32.5X1.8	TÓRICA	O-RING	O-RING	JOINT TORIQUE	1
		CM6H1-45251-02A	ANODO	ANODE	ANODO	ANODE	1
		PAF15-04000003	ARANDELA	WHASER	RONDELLA	RONDELLE	1
		REC90430-08020	JUNTA DESAGÜE	DRAIN GASKET	GUARNIZIONE DRENAGGIO	JOINT DE VIDANGE	x 2
		CM67F-45371-00	ANODO	ANODE	ANODO	ANODE	1
		REC91490-40030	PIN BLOQUEADOR	COTTER PIN	COPPIGLIA	GOUPILLE	1
		REC67F-W0078-00	KIT BOMBA DE AGUA	WATER PUMP REPAIR KIT	KIT POMPA DELL'ACQUA	KIT POMPE À EAU	1
F100D (2005+)	RECKITF100D	CM15026A	ANODO	ANODE	ANODO	ANODE	x 3
		REC5GH-13440-00	FILTRO DE ACEITE	OIL FILTER	FILTRO OLIO	FILTRE À HUILE	1
		CM67F-11325-01A	ANODO	ANODE	ANODO	ANODE	x 3
		PAJASOF40431-025	TÓRICA	O-RING	O-RING	JOINT TORIQUE	1
		REC6D9-12411-00	TERMOSTATO	THERMOSTAT	TERMOSTATO	THERMOSTAT	1
		NGKLFR5A-11	BUJÍA	SPARK PLUG	CANDELE	BOUGIE	x 4
		REC6C5-13915-00	FILTRO COMBUSTIBLE	FUEL FILTER	FILTRO COMBUSTIBILE	FILTRE ESSENCE	1
		REC6C5-24251-00	FILTRO COMBUSTIBLE	FUEL FILTER	FILTRO COMBUSTIBILE	FILTRE ESSENCE	1
		REC6D8-WS24A-00	FILTRO COMBUSTIBLE	FUEL FILTER	FILTRO COMBUSTIBILE	FILTRE ESSENCE	1
		PAGB/T3452.1-32.5X1.8	TÓRICA	O-RING	O-RING	JOINT TORIQUE	1
		CM6H1-45251-02A	ANODO	ANODE	ANODO	ANODE	1
		PAF15-04000003	ARANDELA	WHASER	RONDELLA	RONDELLE	1
		REC90430-08020	JUNTA DESAGÜE	DRAIN GASKET	GUARNIZIONE DRENAGGIO	JOINT DE VIDANGE	x 2
		CM67F-45371-00	ANODO	ANODE	ANODO	ANODE	1
		REC91490-40030	PIN BLOQUEADOR	COTTER PIN	SPINOTTO	PIN	1
		REC67F-W0078-00	KIT BOMBA DE AGUA	WATER PUMP REPAIR KIT	KIT POMPA DELL'ACQUA	KIT POMPE À EAU	1
F100F (2017+)	RECKITF100F	PAF4-04070003	ANODO	ANODE	ANODO	ANODE	x 4
		PAGB/T3452.1-13X2	TÓRICA	O-RING	O-RING	JOINT TORIQUE	x 4
		CM63P-11325-01A	ANODO	ANODE	ANODO	ANODE	1
		REC5GH-13440-00	FILTRO DE ACEITE	OIL FILTER	FILTRO OLIO	FILTRE À HUILE	1
		REC6FP-12411-00	TERMOSTATO	THERMOSTAT	TERMOSTATO	THERMOSTAT	1
		NGKLKR6E-9N	BUJÍA	SPARK PLUG	CANDELE	BOUGIE	x 4
		TEN01165	ANODO	ANODE	ANODO	ANODE	1
		REC6C5-24251-00	FILTRO COMBUSTIBLE	FUEL FILTER	FILTRO COMBUSTIBILE	FILTRE ESSENCE	1
		REC6D8-WS24A-00	FILTRO COMBUSTIBLE	FUEL FILTER	FILTRO COMBUSTIBILE	FILTRE ESSENCE	1
		PAGB/T3452.1-32.5X1.8	TÓRICA	O-RING	O-RING	JOINT TORIQUE	1
		CM6H1-45251-02A	ANODO	ANODE	ANODO	ANODE	1
		PAF15-04000003	ARANDELA	WHASER	RONDELLA	RONDELLE	1
		REC90430-08020	JUNTA DESAGÜE	DRAIN GASKET	GUARNIZIONE DRENAGGIO	JOINT DE VIDANGE	x 2
		CM6E5-45371-01A	ANODO	ANODE	ANODO	ANODE	1
		REC91490-40030	PIN BLOQUEADOR	COTTER PIN	COPPIGLIA	GOUPILLE	1
		REC68V-W0078-00	KIT BOMBA DE AGUA	WATER PUMP REPAIR KIT	KIT POMPA DELL'ACQUA	KIT POMPE À EAU	1
F115A (2000-15)	RECKITF115A	CM15026A	ANODO	ANODE	ANODO	ANODE	x 3
		REC5GH-13440-00	FILTRO DE ACEITE	OIL FILTER	FILTRO OLIO	FILTRE À HUILE	1
		CM67F-11325-01A	ANODO	ANODE	ANODO	ANODE	x 3
		REC60V-12411-00	TERMOSTATO	THERMOSTAT	TERMOSTATO	THERMOSTAT	1
		NGKLFR6A-11	BUJÍA	SPARK PLUG	CANDELE	BOUGIE	x 4
		REC6CB-24501-01	FILTRO COMBUSTIBLE	FUEL FILTER	FILTRO COMBUSTIBILE	FILTRE ESSENCE	1
		REC6CB-13016-00	TÓRICA	O-RING	O-RING	JOINT TORIQUE	1
		REC63P-13915-00	FILTRO COMBUSTIBLE	FUEL FILTER	FILTRO COMBUSTIBILE	FILTRE ESSENCE	1
		REC6CB-14984-00	TÓRICA	O-RING	O-RING	JOINT TORIQUE	1
		CM6G5-45251-01A	ANODO	ANODE	ANODO	ANODE	1
		REC6D8-WS24A-00	FILTRO COMBUSTIBLE	FUEL FILTER	FILTRO COMBUSTIBILE	FILTRE ESSENCE	1
		PAGB/T3452.1-32.5X1.8	TÓRICA	O-RING	O-RING	JOINT TORIQUE	1
		PAF15-04000003	ARANDELA	WHASER	RONDELLA	RONDELLE	1
		REC90430-08020	JUNTA DESAGÜE	DRAIN GASKET	GUARNIZIONE DRENAGGIO	JOINT DE VIDANGE	x 2
		CM6E5-45371-01A	ANODO	ANODE	ANODO	ANODE	1
		REC91490-40030	PIN BLOQUEADOR	COTTER PIN	COPPIGLIA	GOUPILLE	1
		REC68V-W0078-00	KIT BOMBA DE AGUA	WATER PUMP REPAIR KIT	KIT POMPA DELL'ACQUA	KIT POMPE À EAU	1

	KIT	REF					
F115B (2014+) F130A (2015+)	RECKITF115B	PAF4-04070003	ANODO	ANODE	ANODO	ANODE	x 3
		PAGB/T3452.1-13X2	TÓRICA	O-RING	O-RING	JOINT TORIQUE	x 3
		CM63P-11325-01A	ANODO	ANODE	ANODO	ANODE	1
		REC5GH-13440-00	FILTRO DE ACEITE	OIL FILTER	FILTRO OLIO	FILTRE À HUILE	1
		CM67F-11325-01A	ANODO	ANODE	ANODO	ANODE	1
		NGKLKR6E	BUJÍA	SPARK PLUG	CANDELE	BOUGIE	x 4
		REC6CB-13016-00	TÓRICA	O-RING	O-RING	JOINT TORIQUE	1
		REC63P-13915-00	FILTRO COMBUSTIBLE	FUEL FILTER	FILTRO COMBUSTIBILE	FILTRE ESSENCE	1
		REC6CB-14984-00	TÓRICA	O-RING	O-RING	JOINT TORIQUE	1
		REC6D8-WS24A-00	FILTRO COMBUSTIBLE	FUEL FILTER	FILTRO COMBUSTIBILE	FILTRE ESSENCE	1
		PAGB/T3452.1-32.5X1.8	TÓRICA	O-RING	O-RING	JOINT TORIQUE	1
		CM6H1-45251-02A	ANODO	ANODE	ANODO	ANODE	1
		PAF15-04000003	ARANDELA	WHASER	RONDELLA	RONDELLE	1
		REC90430-08020	JUNTA DESAGÜE	DRAIN GASKET	GUARNIZIONE DRENAGGIO	JOINT DE VIDANGE	x 2
		CM6E5-45371-01A	ANODO	ANODE	ANODO	ANODE	1
		REC91490-40030	PIN BLOQUEADOR	COTTER PIN	COPPIGLIA	GOUPILLE	1
		REC68V-W0078-00	KIT BOMBA DE AGUA	WATER PUMP REPAIR KIT	KIT POMPA DELL'ACQUA	KIT POMPE À EAU	1
F150A (2003+) F150B (2012+) F150D (2015+) F150F (2015+) REGULAR ROTATION	RECKITF150RR	CM63P-11325-11A	ANODO	ANODE	ANODO	ANODE	x 4
		CM63P-11325-01A	ANODO	ANODE	ANODO	ANODE	1
		CM67F-11325-01A	ANODO	ANODE	ANODO	ANODE	x 3
		NGKLFR5A-11	BUJÍA	SPARK PLUG	CANDELE	BOUGIE	x 4
		CM68T-11325-00A	ANODO	ANODE	ANODO	ANODE	x 8
		REC67F-12411-01	TERMOSTATO	THERMOSTAT	TERMOSTATO	THERMOSTAT	1
		REC63P-12414-00	JUNTA	GASKET	GUARNIZIONE	JOINT	1
		REC35-822626Q15	FILTRO DE ACEITE	OIL FILTER	FILTRO OLIO	FILTRE À HUILE	1
		REC63P-14984-00	TÓRICA VST	VST O-RING	O-RING VST	JOINT TORIQUE VST	1
		REC63P-13915-00	FILTRO COMBUSTIBLE	FUEL FILTER	FILTRO COMBUSTIBILE	FILTRE ESSENCE	1
		REC65L-24563-00	FILTRO COMBUSTIBLE	FUEL FILTER	FILTRO COMBUSTIBILE	FILTRE ESSENCE	1
		REC69J-24501-10	FILTRO COMBUSTIBLE	FUEL FILTER	FILTRO COMBUSTIBILE	FILTRE ESSENCE	1
		REC6P3-WS24A-00	FILTRO COMBUSTIBLE	FUEL FILTER	FILTRO COMBUSTIBILE	FILTRE ESSENCE	1
		REC6P3-24564-00	TÓRICA	O-RING	O-RING	JOINT TORIQUE	1
		PAF15-04000003	ARANDELA	WHASER	RONDELLA	RONDELLE	1
		REC90430-08020	JUNTA DESAGÜE	DRAIN GASKET	GUARNIZIONE DRENAGGIO	JOINT DE VIDANGE	x 2
		REC61A-W0078-A1	KIT BOMBA DE AGUA	WATER PUMP REPAIR KIT	KIT POMPA DELL'ACQUA	KIT POMPE À EAU	1
		REC91490-40030	PIN BLOQUEADOR	COTTER PIN	COPPIGLIA	GOUPILLE	1
		CMY150KITA	KIT ÁNODOS	KIT ANODES	KIT ANODI	KIT ANODES	1
F150A (2003+) F150B (2012+) F150D (2015+) F150F (2015+) COUNTER ROTATION	RECKITF150CR	TEN01165	ANODO	ANODE	ANODO	ANODE	1
		CM63P-11325-11A	ANODO	ANODE	ANODO	ANODE	x 4
		CM63P-11325-01A	ANODO	ANODE	ANODO	ANODE	1
		CM67F-11325-01A	ANODO	ANODE	ANODO	ANODE	x 3
		NGKLFR5A-11	BUJÍA	SPARK PLUG	CANDELE	BOUGIE	x 4
		CM68T-11325-00A	ANODO	ANODE	ANODO	ANODE	x 8
		REC67F-12411-01	TERMOSTATO	THERMOSTAT	TERMOSTATO	THERMOSTAT	1
		REC63P-12414-00	JUNTA	GASKET	GUARNIZIONE	JOINT	1
		REC35-822626Q15	FILTRO DE ACEITE	OIL FILTER	FILTRO OLIO	FILTRE À HUILE	1
		REC63P-14984-00	TÓRICA VST	VST O-RING	O-RING VST	JOINT TORIQUE VST	1
		REC63P-13915-00	FILTRO COMBUSTIBLE	FUEL FILTER	FILTRO COMBUSTIBILE	FILTRE ESSENCE	1
		REC65L-24563-00	FILTRO COMBUSTIBLE	FUEL FILTER	FILTRO COMBUSTIBILE	FILTRE ESSENCE	1
		REC69J-24501-10	FILTRO COMBUSTIBLE	FUEL FILTER	FILTRO COMBUSTIBILE	FILTRE ESSENCE	1
		REC6P3-WS24A-00	FILTRO COMBUSTIBLE	FUEL FILTER	FILTRO COMBUSTIBILE	FILTRE ESSENCE	1
		REC6P3-24564-00	TÓRICA	O-RING	O-RING	JOINT TORIQUE	1
		PAF15-04000003	ARANDELA	WHASER	RONDELLA	RONDELLE	1
		REC90430-08020	JUNTA DESAGÜE	DRAIN GASKET	GUARNIZIONE DRENAGGIO	JOINT DE VIDANGE	x 2
		REC61A-W0078-A1	KIT BOMBA DE AGUA	WATER PUMP REPAIR KIT	KIT POMPA DELL'ACQUA	KIT POMPE À EAU	1
		REC91490-40030	PIN BLOQUEADOR	COTTER PIN	COPPIGLIA	GOUPILLE	1
		CMY150CRKITA	KIT ÁNODOS	KIT ANODES	KIT ANODI	KIT ANODES	



	KIT	REF					
F150G (2017+) F175A (2014+) F175C (2017+) F200F (2013+) F200G (2013+)	RECKITF150G	CM67F-11325-01A	ANODO	ANODE	ANODO	ANODE	x 3
		CM15026A	ANODO	ANODE	ANODO	ANODE	x 2
		CM68T-11325-00A	ANODO	ANODE	ANODO	ANODE	x 2
		REC6DA-12411-01	TERMOSTATO	THERMOSTAT	TERMOSTATO	THERMOSTAT	1
		PAF15-04000003	ARANDELA	WHASER	RONDELLA	RONDELLE	1
		REC35-822626Q15	FILTRO DE ACEITE	OIL FILTER	FILTRO OLIO	FILTRE À HUILE	1
		REC6CB-24501-01	FILTRO COMBUSTIBLE	FUEL FILTER	FILTRO COMBUSTIBILE	FILTRE ESSENCE	1
		REC6CB-13016-00	TÓRICA	O-RING	O-RING	JOINT TORIQUE	1
		REC63P-13915-00	FILTRO COMBUSTIBLE	FUEL FILTER	FILTRO COMBUSTIBILE	FILTRE ESSENCE	1
		REC6CB-14984-00	TÓRICA	O-RING	O-RING	JOINT TORIQUE	1
		REC6P3-WS24A-00	FILTRO COMBUSTIBLE	FUEL FILTER	FILTRO COMBUSTIBILE	FILTRE ESSENCE	1
		REC6P3-24564-00	TÓRICA	O-RING	O-RING	JOINT TORIQUE	1
		CM6AW-45251-00A	ANODO	ANODE	ANODO	ANODE	1
		REC90430-08020	JUNTA DESAGÜE	DRAIN GASKET	GUARNIZIONE DRENAGGIO	JOINT DE VIDANGE	x 2
		CM6J9-45371-01A	ANODO	ANODE	ANODO	ANODE	1
		NGKLFR6A-11	BUJÍA	SPARK PLUG	CANDELE	BOUGIE	x 4
		REC61A-W0078-A1	KIT BOMBA DE AGUA	WATER PUMP REPAIR KIT	KIT POMPA DELL'ACQUA	KIT POMPE À EAU	1
		REC91490-40030	PIN BLOQUEADOR	COTTER PIN	COPPIGLIA	GOUPILLE	1
		CM6K1-45371-02A	ANODO	ANODE	ANODO	ANODE	1
F200A (2002-07) F225A (2002-07)	RECKITF200A	REC67F-12411-01	TERMOSTATO	THERMOSTAT	TERMOSTATO	THERMOSTAT	x 2
		REC35-822626Q15	FILTRO DE ACEITE	OIL FILTER	FILTRO OLIO	FILTRE À HUILE	1
		CM15026A	ANODO	ANODE	ANODO	ANODE	x 4
		TEN01156	ANODO	ANODE	ANODO	ANODE	x 2
		NGKLFR5A-11	BUJÍA	SPARK PLUG	CANDELE	BOUGIE	x 6
		CM67F-11325-01A	ÁNODO	ANODE	ANODO	ANODE	x 4
		REC65L-24563-00	FILTRO COMBUSTIBLE	FUEL FILTER	FILTRO COMBUSTIBILE	FILTRE ESSENCE	1
		REC68V-14984-00	TÓRICA VST	VST O-RING	O-RING VST	JOINT TORIQUE VST	1
		REC68V-13915-00	FILTRO COMBUSTIBLE	FUEL FILTER	FILTRO COMBUSTIBILE	FILTRE ESSENCE	1
		REC69J-24501-10	FILTRO COMBUSTIBLE	FUEL FILTER	FILTRO COMBUSTIBILE	FILTRE ESSENCE	1
		REC6P3-WS24A-00	FILTRO COMBUSTIBLE	FUEL FILTER	FILTRO COMBUSTIBILE	FILTRE ESSENCE	1
		REC6P3-24564-00	TÓRICA	O-RING	O-RING	JOINT TORIQUE	1
		PAF15-04000003	ARANDELA	WHASER	RONDELLA	RONDELLE	1
		CMY200250KITA	KIT ÁNODOS	KIT ANODES	KIT ANODI	KIT ANODES	1
		REC90430-08020	JUNTA DESAGÜE	DRAIN GASKET	GUARNIZIONE DRENAGGIO	JOINT DE VIDANGE	x 2
		REC91490-40030	PIN BLOQUEADOR	COTTER PIN	COPPIGLIA	GOUPILLE	1
		REC61A-W0078-A1	KIT BOMBA DE AGUA	WATER PUMP REPAIR KIT	KIT POMPA DELL'ACQUA	KIT POMPE À EAU	1
F200C (2006-12)	RECKITF200C	CM15026A	ANODO	ANODE	ANODO	ANODE	x 6
		REC67F-12411-01	TERMOSTATO	THERMOSTAT	TERMOSTATO	THERMOSTAT	x 2
		REC35-822626Q15	FILTRO DE ACEITE	OIL FILTER	FILTRO OLIO	FILTRE À HUILE	1
		TEN01156	ANODO	ANODE	ANODO	ANODE	x 2
		NGKLFR6A-11	BUJÍA	SPARK PLUG	CANDELE	BOUGIE	x 6
		REC63P-13915-00	FILTRO COMBUSTIBLE	FUEL FILTER	FILTRO COMBUSTIBILE	FILTRE ESSENCE	1
		REC6P2-14984-00	TÓRICA VST	VST O-RING	O-RING VST	JOINT TORIQUE VST	1
		REC69J-24501-10	FILTRO COMBUSTIBLE	FUEL FILTER	FILTRO COMBUSTIBILE	FILTRE ESSENCE	1
		REC6P3-WS24A-00	FILTRO COMBUSTIBLE	FUEL FILTER	FILTRO COMBUSTIBILE	FILTRE ESSENCE	1
		REC6P3-24564-00	TÓRICA	O-RING	O-RING	JOINT TORIQUE	1
		PAF15-04000003	ARANDELA	WHASER	RONDELLA	RONDELLE	1
		REC91490-40030	PIN BLOQUEADOR	COTTER PIN	COPPIGLIA	GOUPILLE	1
		REC90430-08020	JUNTA DESAGÜE	DRAIN GASKET	GUARNIZIONE DRENAGGIO	JOINT DE VIDANGE	x 2
		CMY200250KITA	KIT ÁNODOS	KIT ANODES	KIT ANODI	KIT ANODES	1
		REC61A-W0078-A1	KIT BOMBA DE AGUA	WATER PUMP REPAIR KIT	KIT POMPA DELL'ACQUA	KIT POMPE À EAU	1
F225B (2012+) F200C (2012+)	RECKITF225B	CM15026A	ANODO	ANODE	ANODO	ANODE	x 7
		REC67F-12411-01	TERMOSTATO	THERMOSTAT	TERMOSTATO	THERMOSTAT	x 2
		REC35-822626Q15	FILTRO DE ACEITE	OIL FILTER	FILTRO OLIO	FILTRE À HUILE	1
		CM67F-11325-01A	ÁNODO	ANODE	ANODO	ANODE	x 4
		NGKLFR6A-11	BUJÍA	SPARK PLUG	CANDELE	BOUGIE	x 6
		REC6CB-24501-01	FILTRO COMBUSTIBLE	FUEL FILTER	FILTRO COMBUSTIBILE	FILTRE ESSENCE	1
		REC6CB-13016-00	TÓRICA	O-RING	O-RING	JOINT TORIQUE	1
		REC63P-13915-00	FILTRO COMBUSTIBLE	FUEL FILTER	FILTRO COMBUSTIBILE	FILTRE ESSENCE	1
		REC6P2-14984-00	TÓRICA VST	VST O-RING	O-RING VST	JOINT TORIQUE VST	1
		REC6P3-WS24A-00	FILTRO COMBUSTIBLE	FUEL FILTER	FILTRO COMBUSTIBILE	FILTRE ESSENCE	1
		REC6P3-24564-00	TÓRICA	O-RING	O-RING	JOINT TORIQUE	1
		PAF15-04000003	ARANDELA	WHASER	RONDELLA	RONDELLE	1
		REC91490-40030	PIN BLOQUEADOR	COTTER PIN	COPPIGLIA	GOUPILLE	1
		REC90430-08020	JUNTA DESAGÜE	DRAIN GASKET	GUARNIZIONE DRENAGGIO	JOINT DE VIDANGE	x 2
		CMY200250KITA	KIT ÁNODOS	KIT ANODES	KIT ANODI	KIT ANODES	1
		REC61A-W0078-A1	KIT BOMBA DE AGUA	WATER PUMP REPAIR KIT	KIT POMPA DELL'ACQUA	KIT POMPE À EAU	1

	KIT	REF					
F225C (2009-15) F250A (2006-13)	RECKITF225C	CM15026A	ANODO	ANODE	ANODO	ANODE	x 7
		REC67F-12411-01	TERMOSTATO	THERMOSTAT	TERMOSTATO	THERMOSTAT	x 2
		REC35-822626Q15	FILTRO DE ACEITE	OIL FILTER	FILTRO OLIO	FILTRE À HUILE	1
		CM67F-11325-01A	ÁNODO	ANODE	ANODO	ANODE	x 4
		NGKLFR6A-11	BUJÍA	SPARK PLUG	CANDELE	BOUGIE	x 6
		REC6CB-24501-01	FILTRO COMBUSTIBLE	FUEL FILTER	FILTRO COMBUSTIBILE	FILTRE ESSENCE	1
		REC6CB-13016-00	TÓRICA	O-RING	O-RING	JOINT TORIQUE	1
		REC63P-13915-00	FILTRO COMBUSTIBLE	FUEL FILTER	FILTRO COMBUSTIBILE	FILTRE ESSENCE	1
		REC6P2-14984-00	TÓRICA VST	VST O-RING	O-RING VST	JOINT TORIQUE VST	1
		REC6P3-WS24A-00	FILTRO COMBUSTIBLE	FUEL FILTER	FILTRO COMBUSTIBILE	FILTRE ESSENCE	1
		REC6P3-24564-00	TÓRICA	O-RING	O-RING	JOINT TORIQUE	1
		PAF15-04000003	ARANDELA	WHASER	RONDELLA	RONDELLE	1
		REC91490-40030	PIN BLOQUEADOR	COTTER PIN	COPPIGLIA	GOUPILLE	1
		REC90430-08020	JUNTA DESAGÜE	DRAIN GASKET	GUARNIZIONE DRENAGGIO	JOINT DE VIDANGE	x 2
		CMY200250KITA	KIT ÁNODOS	KIT ANODES	KIT ANODI	KIT ANODES	1
		REC6P2-W0078-00	KIT BOMBA DE AGUA	WATER PUMP REPAIR KIT	KIT POMPA DELL'ACQUA	KIT POMPE À EAU	1
F225F (2011+) F225B (2009+) F250D (2011+) F300B (2011+) F300C (2018+)	RECKITF250D	REC6CE-12411-00	TERMOSTATO	THERMOSTAT	TERMOSTATO	THERMOSTAT	x 2
		TEN01177	ANODO	ANODE	ANODO	ANODE	x 4
		CM68T-11325-00A	ANODO	ANODE	ANODO	ANODE	x 2
		TEN01171	ANODO	ANODE	ANODO	ANODE	x 2
		RECN26-13440-00	FILTRO DE ACEITE	OIL FILTER	FILTRO OLIO	FILTRE À HUILE	1
		CM67F-11325-01A	ANODO	ANODE	ANODO	ANODE	x 8
		NGKLFR6A-11	BUJÍA	SPARK PLUG	CANDELE	BOUGIE	x 6
		REC6CB-24501-01	FILTRO COMBUSTIBLE	FUEL FILTER	FILTRO COMBUSTIBILE	FILTRE ESSENCE	1
		REC6CB-13016-00	TÓRICA	O-RING	O-RING	JOINT TORIQUE	1
		REC63P-13915-00	FILTRO COMBUSTIBLE	FUEL FILTER	FILTRO COMBUSTIBILE	FILTRE ESSENCE	1
		REC6CB-14984-00	TÓRICA VST	VST O-RING	O-RING VST	JOINT TORIQUE VST	1
		REC6P3-24564-00	TÓRICA	O-RING	O-RING	JOINT TORIQUE	1
		REC6P3-WS24A-00	FILTRO COMBUSTIBLE	FUEL FILTER	FILTRO COMBUSTIBILE	FILTRE ESSENCE	1
		PAF15-04000003	ARANDELA	WHASER	RONDELLA	RONDELLE	1
		REC91490-40030	PIN BLOQUEADOR	COTTER PIN	COPPIGLIA	GOUPILLE	1
		REC90430-08020	JUNTA DESAGÜE	DRAIN GASKET	GUARNIZIONE DRENAGGIO	JOINT DE VIDANGE	x 2
		CMY200250KITA	KIT ÁNODOS	KIT ANODES	KIT ANODI	KIT ANODES	1
		REC6CE-W0078-01	KIT BOMBA DE AGUA	WATER PUMP REPAIR KIT	KIT POMPA DELL'ACQUA	KIT POMPE À EAU	1
F300A (2008-11)	RECKITF300A	REC6AW-12411-00	TERMOSTATO	THERMOSTAT	TERMOSTATO	THERMOSTAT	x 2
		TEN01177	ANODO	ANODE	ANODO	ANODE	x 8
		RECN26-13440-00	FILTRO DE ACEITE	OIL FILTER	FILTRO OLIO	FILTRE À HUILE	1
		NGKLFR6A-11	BUJÍA	SPARK PLUG	CANDELE	BOUGIE	x 8
		TEN01170	ANODO	ANODE	ANODO	ANODE	x 2
		TEN01173	ANODO	ANODE	ANODO	ANODE	x 10
		TEN01171	ANODO	ANODE	ANODO	ANODE	x 10
		REC63P-13915-00	FILTRO COMBUSTIBLE	FUEL FILTER	FILTRO COMBUSTIBILE	FILTRE ESSENCE	1
		REC6AW-14984-00	TÓRICA VST	O-RING VST	O-RING VST	TORIQUE VST	1
		REC6P3-WS24A-00	FILTRO COMBUSTIBLE	FUEL FILTER	FILTRO COMBUSTIBILE	FILTRE ESSENCE	1
		REC6P3-24564-00	TÓRICA	O-RING	O-RING	TORIQUE	1
		PAF15-04000003	ARANDELA	WHASER	RONDELLA	RONDELLE	1
		CMY300350XPKITA	KIT ÁNODOS	KIT ANODES	KIT ANODI	KIT ANODES	1
		REC90430-08020	JUNTA DESAGÜE	DRAIN GASKET	GUARNIZIONE DRENAGGIO	JOINT DE VIDANGE	x 2
		REC91490-40030	PIN BLOQUEADOR	COTTER PIN	COPPIGLIA	GOUPILLE	1
		REC6AW-W0078-00	KIT BOMBA DE AGUA	WATER PUMP REPAIR KIT	KIT POMPA DELL'ACQUA	KIT POMPE À EAU	1
F350A (2008 +)	RECKITF350A	REC6AW-12411-00	TERMOSTATO	THERMOSTAT	TERMOSTATO	THERMOSTAT	x 2
		CM67F-11325-01A	ANODO	ANODE	ANODO	ANODE	x 10
		CM63P-11325-01A	ANODO	ANODE	ANODO	ANODE	x 3
		NGKLFR6A-11	BUJÍA	SPARK PLUG	CANDELE	BOUGIE	x 8
		RECN26-13440-00	FILTRO DE ACEITE	OIL FILTER	FILTRO OLIO	FILTRE À HUILE	1
		TEN01172	ANODO	ANODE	ANODO	ANODE	x 2
		TEN01177	ANODO	ANODE	ANODO	ANODE	x 8
		REC6CB-24501-01	FILTRO COMBUSTIBLE	FUEL FILTER	FILTRO COMBUSTIBILE	FILTRE ESSENCE	1
		REC6CB-13016-00	TÓRICA VST	O-RING VST	O-RING VST	TORIQUE VST	1
		REC63P-13915-00	FILTRO COMBUSTIBLE	FUEL FILTER	FILTRO COMBUSTIBILE	FILTRE ESSENCE	1
		REC6CB-14984-00	TÓRICA VST	O-RING VST	O-RING VST	TORIQUE VST	1
		REC6P3-24564-00	TÓRICA	O-RING	O-RING	TORIQUE	1
		REC6P3-WS24A-00	FILTRO COMBUSTIBLE	FUEL FILTER	FILTRO COMBUSTIBILE	FILTRE ESSENCE	1
		CM15026A	ANODO	ANODE	ANODO	ANODE	1
		CMY300350KITA	KIT ÁNODOS	KIT ANODES	KIT ANODI	KIT D'ANODES	1
		TEN01170	ANODO	ANODE	ANODO	ANODE	1
		TEN01175	ANODO	ANODE	ANODO	ANODE	1
		TEN01174	ANODO	ANODE	ANODO	ANODE	1
		CM63P-11325-11A	ANODO	ANODE	ANODO	ANODE	1
		PAF15-04000003	ARANDELA	WHASER	RONDELLA	RONDELLE	1
		REC90430-08020	JUNTA DESAGÜE	DRAIN GASKET	GUARNIZIONE DRENAGGIO	JOINT DE VIDANGE	x 2
		REC6AW-W0078-00	KIT BOMBA DE AGUA	WATER PUMP REPAIR KIT	KIT POMPA DELL'ACQUA	KIT POMPE À EAU	1
		REC91490-40030	PIN BLOQUEADOR	COTTER PIN	COPPIGLIA	GOUPILLE	1

SISTEMA DE ALIMENTACIÓN Y FILTRACIÓN
FUEL & FILTRATION SYSTEM
SISTEMA DI ALIMENTAZIONE E FILTRAZIONE
SYSTÈME D'ALIMENTATION ET DE FILTRATION

BOMBA DE COMBUSTIBLE | FUEL PUMP | POMPA BENZINA | POIRE À CARBURANT

BOMBA DE COMBUSTIBLE

Fabricada con elastómeros termoplásticos inyectados, resistentes al alcohol y rayos UV.s

REF		
GS31187	1/4" = 6 mm	1
GS31090	5/16" = 8 mm	1
GS31095	3/8" = 9.5 mm	1

FUEL PUMP

Premium quality bulb resistence to alcohol as well as UV and ozone.

POMPA BENZINA

Fabbricata con elastomero termoplastico, resistente ai solventi e raggi UV.

POIRE À CARBURANT

Fabriqué avec des élastomères thermo-plastiques injectés, résistant à l'alcool et aux rayons UV.

GOLDENSHIP



LÍNEA DE COMBUSTIBLE

Universal. Manguera resistente al alcohol.

REF		
GS31096	5/16" x 2 m	1
GS31097	3/8" x 2 m	1
GS31099	8 mm x 2 m	1
SIE18-8013	5/16" x 2 m	1
SIE18-8015	3/8" x 2 m	1

FUEL LINE ASSEMBLY

Universal. Alcohol resistant hose.



TUBO CARBURANTE

Universale. Tubo resistente ai solventi.



TUYAU CARBURANT

Universelle. Tuyau résistant à l'alcool.



SIE18-8013
SIE18-8015

new

REF	OEM		
GS31183	6Y1-24360-52-00 6Y1-24360-52-01 6Y1-24360-52-02 6Y1-24360-52-51 6Y1-24360-52-52	6 mm x 2 m	1

GOLDENSHIP



new



REF	OEM		
PAF15-09000000	6G1-24306-55 6Y1-24306-55-00	6 mm x 3m	1

MANGUERA DE COMBUSTIBLE

Manguera «Trident» para líneas de combustible. Con refuerzo termoplástico que le permite excelente flexibilidad y resistencia a los rayos UV. Color gris. Resistente al alcohol. Especialmente indicado para motores fueraborda.
Garantía: 3 años

FUEL HOSE

Marine fuel hose (distribution and vent) for outboards. Fuel resistant thermo-plastic formulation with 2 spiral reinforcement provides excelent bendability and resistance to UV, aging and permeation by all marine fuels (gasoline/petrol and diesel) including alcohol blends.
Warranty: 3 years

TUBO BENZINA

Tubo «Trident» per linea combustibile. Con rinforzo termoplastico che gli permette un'eccellente flessibilità e resistenza ai raggi UV. Colore grigio. Resistente ai solventi. Indicato per i motori fuoribordo.
Garanzia: 3 anni

TUYAU CARBURANT

Tuyau «Trident» pour carburant. Avec renfort thermoplastique qui permet une excellente flexibilité et résistance aux rayons UV. Gris. Résistant à l'alcool Convient particulièrement aux moteurs hors-bord.
Garantie: 3 ans

REF				
TRI305-0566	5/16" = 7,92 mm	15 m	1	SAEJ1527 ISO-8469 B1 CE
TRI305-0386	3/8" = 9,53 mm	15 m	1	



TRIDENT

MADE IN THE USA

CE CERTIFIED

De goma para diesel y gasolina sin plomo. Ideal para fueraborda. Refuerzos texiles internos. Muy flexible.
Contenido aromático 50%

Rubber Hose suitable for loading mineral oils, diesel and unloaded fuel

In gomma per diesel e benzina senza piombo. Ideale per motori fuoribordo. Tessuto interno rinforzato. Molto flessibile.

Caoutchouc pour diesel et essence sans plomb. Idéal pour le hors-bord. Renforts textiles internes. Très flexible

CARBUPOMP/10NL

REF	Ø (mm)					
GS35031	6x12	10 bar	50 mm	-25ºC ➡80º C	50 m	ISO R1307
GS35032	8x15	10 bar	65 mm		50 m	

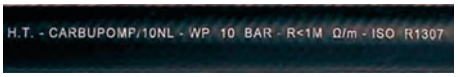

MUELLE TUBO COMBUSTIBLE / SPRING, FUEL PIPE / MOLLA TUBO COMBUSTIBILE / RESSORT, TUYAU DE CARBURANT

new

REF	OEM
PAF4-04000030	90467-08004
PAF4-05000010	90467-13M13



ABRAZADERA / CLAMP SMALL / FASCETTE / COLLIER

new

REF	OEM	
REC650-24351-51	650-24351-00 650-24351-01 650-24351-50 650-24351-51	6 mm
REC6E5-24351-51	6E5-24351-00 6E5-24351-51	8 mm



REF		
REC09401-11425	6-8 mm	1
REC09401-11425BULK	6-8 mm	25



ADPATADOR LÍNEA DE COMBUSTIBLE / COUPLER / ADATTATORE / RACCORD COUPLEUR

REF	
REC22-8M0001721	Ø 11 mm --> Ø 9 mm



COMPONENTES TANQUE Y CONECTORES / FUEL TANK COMPONENTS & CONNECTORS / COMPONENTI SERBATOIO E CONETTORI / COMPOSANTS ET CONNECTEURS DU RÉSERVOIR

TAPÓN CON RESPIRADERO / PLUG WITH BREATHER / SPINA CON RESPIRO / BOUCHON AVEC EVENT

new

REF	OEM
PAF15-10010000	6YJ-24610-01 6YJ-24610-00



TAPÓN / PLUG / TAPPO / BOUCHON

new

REF	OEM	
PAF4-04120100	67D-24610-00 67D-24610-02 67D-24610-03 67D-24610-04 68D-24610-10	F2.5 F4



RESORTE DE SEGURIDAD PARA TAPÓN / SPRING, PREVENT DESQUAMATING / MOLLA SECURITÀ PER TAPPO / RESSORT, DE SECURITÉ POUR LE BOUCHON

new

REF	OEM
PAF4-04120103	624-24634-00

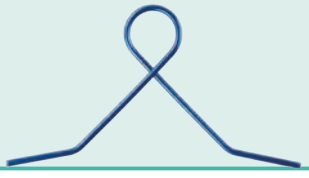

FILTRO / FILTER / FILTRO / FILTRE

new

REF	OEM
PAF15-10000002	6YJ-24167-00

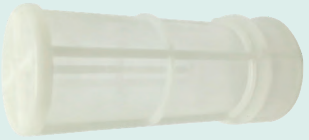

MEDIDOR DE COMBUSTIBLE / OLEOMETER ASSY / MISURATORE DI CARBURANTE / TUBE D'ASPIRATION POUR RESERVOIR

new

REF	OEM
PAF15-10020000	6YJ-24260-00 6YJ-24260-10
PAF15-10000003	6Y1-24268-00

PAF15-10020000



PAF15-10000003



LLAVE DE CIERRE DE DEPÓSITO / KNOB OIL SWITCH / CHIAVE DE DEPOSITO BLOCCO / COMMUTATEUR D'HUILE AVEC BOUTON

new

REF	OEM	
PAF2.6-00000004	69M-24575-00	F2.5



CONECTOR DE DEPÓSITO / TANK CONNECTOR / ATTACCO SERBATOIO / RACCORDS DE RESERVOIR

Fabricado en latón. / Made in machined brass. / Fabbricato in ottone. / Fait en laiton.

REF		
GS31068	1/4" NPT	1



GOLDENSHIP

Para conectar dos motores a un sólo depósito, o viceversa. Fabricado en latón. / To connect two motors to a single tank, or vice versa. Made in machined brass / Per collegare due motori a un singolo serbatoio o viceversa. Fabbricato in ottone. / Pour connecter deux moteurs à un même réservoir, ou inversement. Fait en laiton.

REF		
GS31069	1/4" NPT	1



GOLDENSHIP MADE IN THE USA

REF	OEM		
GS31074	6Y1-24305-05-00 6Y1-24305-06, -00 6YL-24305-01-00	6 mm 1/4"	1
GS31075	6G1-24305-00, 01, 02 6G1-24305-02-00 6G1-24305-03, -00 6G1-24305-04, -00 6G1-24305-05, -00 6G1-24305-0500 6Y1-24305-00, -01, -02 6Y1-24305-05-00 6Y1-24305-06-00 6YL-24305-01-00	8 mm 5/16"	1
GS31076	6E5-24305-05-00 6E5-24305-06, -00 6Y2-24305-05-00 6Y2-24305-06-00 6YK-24305-01-00	10 mm 3/8"	1

GOLDENSHIP MADE IN THE USA



REF	OEM	
REC6G1-24304-02	6G1-24304-02	6 mm

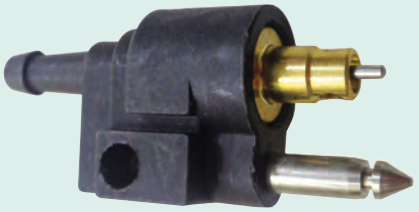

new

Conector doble | Double connector | Connettore doppio | Double connecteur

REF		
GS31092	8 mm	1

GOLDENSHIP



Toma de tanque de combustible. Fabricado en latón. | Fuel tank connector Made in machined brass | Filettatira per serbaotio benzina Fabbricato in ottone. | Prise de réservoir de carburant. Fait en laiton.

REF		
GS31073	1/4" NPT	1
GS31020	1/4" NPT	1

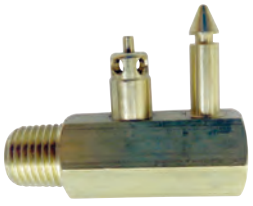

GS31073



GS31020

GOLDENSHIP MADE IN THE USA

PASAMAMPAROS | THRU HULL | PASSASCAFO | PASSE-CLOISON

Para atravesar mamparos de hasta 12 mm. Fabricado en latón. | For bulkhead up to 12 mm. Made in machined brass. | Per attraversare paratie fino a 12 mm. Fabbricato in ottone. | Pour traverser des cloisons jusqu'à 12 mm. Fait en laiton.

REF		
GS31064	3/8"	1



GOLDENSHIP MADE IN THE USA

FILTRO DE COMBUSTIBLE Y ELEMENTOS | FUEL FILTERS AND ELEMENTS | FILTRI BENZINA E RACCORDI | FILTRE A ESSENCE ET CARTOUCHE DE RECHANGE

BRACKET | BRACKET | SUPPORTO | TÊTE DE FILTRE À ESSENCE

Con 2 tapones de bronce y 2 tubos de extensión. (2 entradas y 2 salidas). | With 2 brass plugs and 2 extension tubes. (2 inputs & 2 outputs). | Con 2 tappi di bronzo e 2 tubi di estensione. (2 ingressi entrata carburante e 2 uscite carburante). | Avec 2 bouchons en bronze et 2 tubes d'extension. (2 entrées et 2 sorties).

REF		
REC25000	1/4"	AL
REC25010	1/4"	INOX /SS AISI316
REC25020	3/8"	AL
REC25030	3/8"	INOX /SS AISI316
RECOBBRACKET	1/4"	Plástico | Plastic Plastica | Plastique





REC25000 - REC25020



REC25010 - REC25030



RECOBBRACKET

FILTRO COMBUSTIBLE SEPARADOR DE AGUA | WATER SEPARATING FUEL FILTER | FILTRO SEPARATORE ACQUA-BENZINA | FILTRE À ESSENCE

REF	MICRON	
REC24942	10	4 7/16" = 11 cm
REC35-802893Q01	10	3 3/4"
REC855686	28	4 7/16"
REC35-802893Q	25	3 3/4"
RACPFF5510	10	4 7/16"

RACOR



RACPFF5510

RECmar



REC24942



REC35-802893Q01



REC855686



REC35-802893Q

Filtro original. | OEM filter. | Filtro benzina originale. | Filtre à essence original

REF	MICRON	
RM35-802893Q	10	3 3/4"



FILTRO CON BRACKET
Con 2 tapones de bronce y 1 tubo de extensión.

OEM FILTER WITH BRACKET
With 2 brass plugs & 1 extension tube.

FILTRO BENZINA CON SUPPORTO
Con 2 tappi di bronzo e 1 tubo di estensione.

FILTRE A ESSENCE AVEC SUPPORT
avec 2 bouchons en bronze et 1 tube d'extension

REF	MICRON			BRACKET
REC24950	25	1/4"	50 GPH	AL
REC24952	10	1/4"	50 GPH	AL



RECmar

FILTRO DECANTADOR DE COMBUSTIBLE COMPLETO CON VASO TRASPARENTE

COMPLET FUEL FILTER WITH TRANSPARENT BOWL

FILTRO DI DECANTAZIONE BENZINA COMPLETO CON VASCHETTA TRASPARENTE

FILTRE SÉPARATEUR D'ESSENCE

REF	OEM		BRACKET
RAC320R-RAC-01	YMM-2W227-01		AL
RAC320R-RAC-03		RACS3213	Plástico / Plastic / Plastica / Plastique

RACOR



REF			BRACKET
RECOBFILALU			AL
RECOBFILTER	RECOBELEMENT	150 l/h	Plástico / Plastic / Plastica / Plastique

RECmar



RECmar

REF	OEM		R.O. / OEM	MICRON		
REC90794-46866	907-94469-05	REC90794-46868	907-94469-13	10	117 l/h	175 hp





LLAVE PARA FILTRO
FILTER KEY
CHIAVE DA FILTRO
CLÉ À FILTRE

REF
RECYS-225-15



new

REF	R.O./OEM	MICRON	
PAF40-0701000EI	907-94469-05	10	70 hp



new



REF	OEM		OEM	MICRON		
RAC120R-RAC-01	YMM-2W114-00	RACS3240	YMM-2E114-00	10	114 l/h	50 -115 hp

RACOR



FILTRO CON BOMBA CEBADORA | FILTER WITH PRIMMING PUMP | FILTRO CON POMPETA PER RIEMPIRE | FILTRE ESSENCE AVEC POMPE D'AMORCAGE

RACOR

REF	OEM		OEM	MICRON			
RAC490R-RAC-01	YMM-2W227-01	RACS3227	YMM-2E227-00, 01	10	340 l/h	3/8" NPTF	150 hp





LLAVES PARA FILTRO | FILTER KEY | CHIAVE DA FILTRO | CLÉ À FILTRE

REF
RACRK22628

RACOR



REF	
REC70720	65 - 110 mm

RECmar

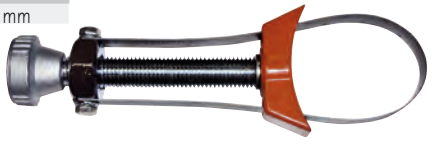

RACOR DE LATÓN | RACOR MADE IN BRASS | RACCORDO IN OTTONE | RACCORD EN LAITON

REF			
GS31065	1/4" NPT	3/8" = 9.5 mm	1
GS31166	1/4" NPT	5/16" = 7.9 mm	2
GS31155	3/8" NPT	3/8" = 9.5 mm	2
GS31156	3/8" NPT	5/16" = 7.9 mm	2
GS31157	3/8" NPT	1/4" = 6.4 mm	2



REF			
GS31066	1/4" NPT	5/16" = 7.9 mm	2
GS31067	1/4" NPT	3/8" = 9.5 mm	2

GOLDENSHIP



FILTRO COMBUSTIBLE PARA MONTAJE EN LÍNEA — IN-LINE FUEL FILTER — FILTRO BENZINA PER MONTARE IN LINEA — FILTRE A ESSENCE EN LIGNE

GOLDENSHIP

REF				
GS31001	50 l/h	6-8 mm	plástico plastic plastica plastique	1
GS31002	150 l/h	8-10 mm		1



GS31001 GS31002

REF			
GS30435	6, 8, 10 mm	metal + cristal metal + crystal metallo + cristallo métal + cristal	1

GOLDENSHIP



REF	OEM			
REC40145	65W-24251-10	1/4"	1/4"	plástico plastic plastica plastique
REC40155		5/16"	5/16"	
REC40165	67F-24251-02	3/8"	3/8"	
REC40135		5/16"	3/8"	



REF	OEM
PAF4-04120005	6L5-24251-00



REF	OEM	
REC35-80365M	646-24251-02	6 mm
PAF4-05000300	646-24251-01	



REF	OEM	
REC68T-24251-00	68T-24251-00 68T-24251-01 6EE-F4251-00	F6, F8 (2001+)



REF	OEM	
REC6F5-24563-00	6F5-24563-00	
REC61N-24563-10	61N-24563-10 61n-24563-00	9.9 hp



REC61N-24563-10



REC6F5-24563-00

REF	OEM	
PAF15-07080000	61N-24560-00	15 - 60 hp



REF	OEM	
PAF15-07080002	61N-24521-00	plástico plastic plastica plastique



REF	OEM
REC64J-24560-10	64J-24560-00 64J-24560-10

E75, 75AE, AET (2003-15)
85 AED, AET (2003-15)
F40 (2002-07)
T50, FT50, F50 (2001-16)
T60, FT60, F60 (2002-07)



REF	OEM
REC6BG-13915-00	6BG-13915-00

F30 (2013) F75 (2005-13)
F40 (2008-13) F90 (2005-13)
F50 (2005-13) T50 (2005-13)
F60 (2005-13) T60 (2005-13)
F70 (2010-13)



REF	OEM
REC6C5-24251-00	6C5-24251-00

F30 (2009+) F75 (2005)
F40 (2006+) F80 (2008+)
F50 (2005+) F100 (2005+)
F60 (2005+) F115 (2014+)
F70 (2011+) F130 (2015+)



REF	OEM
REC68V-24563-00	68V-24563-00

EUROPE
F40 F80
F50 F100
F50 F115



REF	OEM
REC6D8-WS24A-00	6D8-WS24A-00 6D8-24563-00

F50 - F115



REF	OEM				
REC6D8-24560-08	6D8-24560-08 6D8-24560-09 68V-24560-01 68V-24560-00	REC68V-24563-00	REC93210-32738	5/16"	F60 - F115 HP



new

new

REF	OEM				
REC6R3-24560-00	6R3-24560-00	REC61N-24563-10	REC93210-32738	5/16"	115 -225 HP



REF	OEM
REC68F-24563-10	68F-24563-10

150-300HP (2004-06)
Z, VZ, LZ



REF	OEM
REC65L-24563-00	65L-24563-00

F200 (2002-06)
F150 (2004-06)
225FETO (2003)
L/250B (1997-2003)



REF	OEM
REC6C5-13915-00	6C5-13915-00

F50 (2005-13)
F60 (2005-13)
F70 (2010-13)
F75 (2005-13)
F90 (2005-13)
T50 (2005-13)
T60 (2005-13)



new

REF	OEM
REC6P2-WS245-00	6P2-WS245-00 6P2-24563-00

F (L) 200C
F (L) 250A

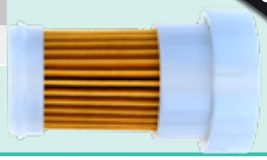

REF	OEM
REC69J-24501-10	69J-24501-10

F150-F225 (2006-14)
F250 (2005-14)



new

REF	OEM
REC68F-24563-00	68F-24563-00

(L) Z 150P, Q
(L) Z 175 G
(L) Z 200N/P
(L) Z 250 D/F



REF	OEM
REC6P3-WS24A-00	6P3-WS24A-00 6P3-WS24A-01 6P3-24563-00

F150 (2007-11)
Z200 (2007)
Z150/175 (2007)
F225 (2007-11)
F200 (2007-11)
F350 (2008-11)
F250 (2009-11)
Z300 (2007)
F300 (2011)



new

REF	OEM
REC69J-24502-00	69J-24502-00

LF/FL/F150A,T,D,B (2005+)
LF/FL/F200A,T,B (2004-11)
LF/FL/F225T,A (2004-11)
F75T, B (2005)
F80B,A (2005+)
F90,T,B,A (2013+)
F100D (2005+)



REF	OEM
REC6P3-24564-00	6P3-24564-00

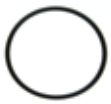

REF	OEM
REC61A-24563-00	61A-24563-00

V6, 3'1L, D-T



GUÍA FILTROS DE COMBUSTIBLE — FUEL FILTER GUIDE — GUIDA FILTRO BENZINA — GUIDE FILTRE À ESSENCE

	REF
3A / F2,5A / F4A	PAF4-04120005
4A / 5C / 6C / 8C	PAF4-05000300
F4B / F5A / F6A / F6C / F8C / FT8D / F9,9J / FT9,9L	REC68T-24251-00
F9,9C / FT9,9D / F15A / F25A / FT25B (-2004)	REC40145
F9,9C (1001584+) / FT9,9D (1001139+) /F15A (1009198+) / F25A & FT25B (1013331+) (2004+)	REC61N-24563-10
F25G	REC6D8-WS24A-00
F30A / F40B	REC40145
FT50B (-2000)	REC61N-24563-10
FT50B (2001+)	REC68V-24563-00
F60A / FT60B (-2003)	REC68V-24563-00
F60A / FT60B (2004+)	REC61N-24563-10
F60-F115	REC6D8-24560-08
F50F / FT50G / F60C / FT60D (-2006)	REC68V-24563-00
F50F / FT50G / F60C / FT60D (2007+)	REC6D8-WS24A-00
F30B / F40F / F50H / F60F / FT50J / FT60G/ F70A	REC6D8-WS24A-00
F80A / F100A (-2001)	REC40165
F80A / F100A (2002+)	REC61N-24563-10
F80B / F100D / F(L)115A (-2006)	REC68V-24563-00
F80B / F100D / F(L)115A (2007+) / F(L)115B	REC6D8-WS24A-00
F100F	REC6D8-WS24A-00

	REF
F(L)150A / F(L)200A / F200B / F(L)225A(-2006)	REC65L-24563-00
F(L)150A / F(L)200A / F200B / F(L)225A (2007+)	REC6P3-WS24A-00
F(L)200C / F(L)250A (-2006)	REC6P2-WS245-00
F(L)200C / F(L)250A (2007+)	REC6P3-WS24A-00
F(L)225B / F225C / F(L)225F (V6 4,2L) /F(L)250D (V6 4,2L) / F(L)300A / F(L)300B(V6 4,2L) / F(L)350A / F(L)200F / F(L)200G /F175A	REC6P3-WS24A-00
9,9F / 15F / F15C / F20B / 25N / F25D /FT25F / 30D / 40V / 50G / F50A / 60F / 75C/ 90A / 100A / F100B / 115C / (L)130B /(L)150F / 175D / (L)200F / 200G / 225D	REC61N-24563-10
115B	REC6F5-24563-00
115-225 HP	REC6R3-24560-00
(L)250A	REC61A-24563-00
225G / 250B	REC65L-24563-00
(L)Z150P / (L)Z150Q / Z175G / (L)Z200N /Z200P (-2004)	REC68F-24563-00
(L)Z150P / (L)Z150Q / Z175G / (L)Z200N /Z200P (2005-06)	REC68F-24563-10
(L)Z150P / (L)Z150Q / Z175G / (L)Z200N /Z200P (2007+)	REC6P3-WS24A-00
(L)Z250D / Z250F (-2003)	REC68F-24563-00
(L)Z250D / Z250F (2004-06)	REC68F-24563-10
(L)Z250D / Z250F (2007+)	REC6P3-WS24A-00
(L)Z300A (-2006)	REC68F-24563-10
(L)Z300A (2007+)	REC6P3-WS24A-00

FILTRO VST — VST FILTER — FILTRO VST — FILTRE VST

REF	OEM
REC68V-13915-00	68V-13915-00

F115 (2000-09)
F200 TXR (2002-09)
LF200 TXR (2002-09)
F225 TXR (2002-09)
F225 TUR (2002-09)



REF	OEM
REC68F-13915-00	68F-13915-00

HPDI 150 (2000-05)
V-Max HPDI 150 (2000-09)
HPDI 225 (2003-09)
HPDI 250 (2003-09)
HPDI 300 (2004-09



REF	OEM
REC66K-13915-00	66K-13915-00

HDX150	(1999-05)	LX225	(2000-03)
LX150	(1999-01)	S225	(1999)
PX150	(1999)	SX225	(2000-03)
SX150	(1999-04)	V225	(1999)
VX150	(2000-04)	VX225	(2000-04)
LX200	(1999-01)	L250	(1999)
SX200	(1999-05)	LX250	(2000-03)
V200	(1999)	SX250	(2000-03)
VX200	(2000-05)	VX250	(2002-04)
L225	(1999)		



REF	OEM
REC65L-13915-00	665L-13915-00

L225 (1997-98)
S225 (1997-98)
L250 (1997-98)
V200 (1998)
V225 (1998)



REF	OEM
REC63P-13915-00	63P-13915-00

F150 TXR	(2004-09)	F300 TXR	(2007-09)
F150 TLR	(2004-09)	F300 TUR	(2007-09)
F150 TJR	(2009)	F350 TXR	(2007-09)
LF150 TXR	(2004-09)	F350 TUR	(2007-09)
F250 TXR	(2005-09)	F225 TLR	(2007-09)
F250 TUR	(2005-09)		



REF	OEM
REC60V-24251-01	60V-24251-01

LZ150	(2005)	VZ225	(2005-09)
VZ150	(2005-10)	LZ250	(2005)
Z150	(2005)	VZ250	(2005-09)
VZ175	(2005-10)	Z250	(2005)
Z175	(2005)	LZ300	(2005-06)
LZ200	(2005-10)	VZ300	(2005-09)
VZ200	(2005-09)	Z300	(2005-06)
Z200	(2005-10)		



GUÍA FILTROS VST — FUEL FILTER GUIDE — GUIDA FILTRO BENZINA — GUIDE FILTRES VST

	REF	OEM
3A, F4A	PAF4-04120005	6L5-24251-00
4A, F4A 5C 6C/D 8C, F8B F9.9A/B, FT9.9A HPDI	REC35-80365M	646-24251-02
FT8D	REC68T-24251-00	68T-24251-00
9.9D 15D 20C/D 25D/J/N/Q 30A/D/G 40H/Q 50D/G 55B 60F 70B 75A 80A 85A 90A 100A 115B/C/(L) 130B/(L) 150C/(L) 175B 200B/PRO 200V 225B, (-1993)	REC6F5-24563-00	6F5-24563-00

	REF	OEM
9.9C/D/F 15C/D/F 20/D/F 25B/D/J/N/Q/V 30D/GH 40H/Q/V/X/Y/F, 40A/B/F 45A/F, 50A/B/FT, 50A, 50D/G/H/PRO, 50 55B 60F 70B 75A/C/PRO 80A 85A 90A 100A/PROV, 100/115B/C/(L) 130B/D 150H/ (L), 150C/ (L), 150F 175B/D/(L) 200B/(L), 200F/G/PROV, 200/225B/D (1994)	REC61N-24563-10	61N-24563-10
FT 9.9D, F9.9C/F 15A/F 20A/F 25A/FT, 25B/F 30A/F 40B	REC40145	65W-24251-00

	REF	OEM
F80A F100A	REC40165	67F-24251-02
F40C F50F, FT50C/G/F 60A/C/FT, 60B/D/F 80B/F 100D/F(L) 115A	REC68V-24563-00	68V-24563-00
150A/(L) 225C/(L) 250A	REC61A-24563-00	61A-24563-00
225G/(L) 250B/F(L) 150A/F(L) 200A/F(L) 225A/F(L) 250A	REC65L-24563-00	65L-24563-00
HPDI (Fuel Strainer)	REC60V-24251-01	60V-24251-01

FILTRO DE ACEITE OIL FILTER FILTRO OLIO FILTRE A HUILE

REF	OEM
REC61A-13411-00	61A-13411-00

Z250TR
DETO
FETO (2003-07)
250B
AETO (1993-06)
L250B
TXR (2000-03)
225G-GETOL (1999-03)
Z300 AETO
TXR (2004-07)
L250G-GETOX (2006-10)

REF	OEM
REC6E5-13411-00	6E5-13411-00

V-Z 200T
PETO
TLR (2001-07)
Z150 F
TXRA
PETOLX (1996-07)
175D
DETO (1996-03)
Z1200F-FETO (1996-10)
225D-DETOX (2000-03)
115 B
BET (1988-02)
130BETO (1991-01)
115CETO
TLR
TXR (1991-13)



REF	OEM
REC6J8-13411-00	6J8-13411-00

25Q-QEO (1990-94)
50
G-GEO-GETOL (1993-07)
50H-HR-MDO (1996-02)
40V-MH-MD
VETO
VE-O (1995-13)
40YETO-YETOL (2005-07)
30DETOL
DEOS
MH (2011-13)
GOLTRA
F
FETO
L (1989-13)
70BETO
B
BEMO (1989-13)
25J
JEQ
JETO
NEM
W (1988-13)
20D
EM-ML

REF	OEM
REC68F-13440-00	68F-13440-00

LZ
LZ300
TR
AETO-X-V (2004-07)
Z175TR
GETO-X (2002-07)
V
Z200T
PETO
TLR (2001-07)
Z250
TXR
DETO
X (2003-07)
Z150P
TXR
PETO (2000-07)



REF	OEM
REC35-80365M	646-24251-02

L150
L200
225
175
250
115
130



REF	OEM
REC6G8-13440-00	6G8-13440-00



new

REF	OEM
REC5GH-13440-60	5GH-13440-60 5GH-13440-50



REF	OEM	
REC35-822626Q15	69J-13440-00, 01, 03	3/4" x 16NPT
REC5GH-13440-00	5GH-13440-00, 30, 70	20 x 1.5
RECN26-13440-00	N26-13440-00, 02	3/4" x 16 NPT
REC3FV-13440-00	3FV-13440-00, 10, 20, 30	20 x 1.5



GUÍA FILTROS DE ACEITE OIL FILTER GUIDE GUIDA FILTRO OLIO GUIDE FILTRE A HUILE

	REF
F8A F9,9A/B FT9,9A (1990+)	REC6G8-13440-00
F9,9C (2000+) FT9,9D (2000+) F15A (2000+) F20A(2000+) F25A (2000+)/FT25B F30A F40A (2000+)/F40B (2001+) F50A(1999-05)/F50F(-2005)/FT50B (2000+)/FT50C (-2005)/ FT50G (-2005) F60A (-2005)/F60C(-2005)/FT60B (-2005)/FT60D (-2005) F80A (2000+)/F80B F100A (2000+)/F100B/F100D F(L)115A/F115B/F100F	REC5GH-13440-00
F15C (2007+) F20B (2007+) F25D/G FT25F F30B F40F F50A, FT50C, F50F, FT50G, (2006+) FT60B, F60A, F60C, FT60D (2006+) F50H/F60F/FT50J/FT60G F70A/VX CRUISER/DELUXE (2008-11) VX SPORT 08/FX/FX HO/FX HO CRUISER 08	REC5GH-13440-60
F9,9C (1998), FT9,9D (1999), F15A (1998), F20A (1998), F25A (1998-99), F40A (1999), F40B (2000), F50A (1995-98), FT50B (1996-99), F80A, F100A (1999)	REC3FV-13440-00
F(L)150A/F175A/F(L)200A/F(L)200C/F(L)200F/F(L)200G/ F(L)225A/F(L)225B/F225C/F(L)250A/F(L)250B/FX SHO/FX SHO CRUISER/FX HO CRUISER/FZR/FZS	REC35-822626Q15
F(L)300A/F(L)350A/F(L)225F/F(L)250D/F(L)300B	RECN26-13440-00
WaveRunner Model Part Number Price	
FX140/FX140 CRUISER/FX160/FX160 CRUISER/FX-H.O CRUISER/FX-HIGH OUTPUT/VX 1100SPORT & DELUXE	REC5GH-13440-00

BOMBA DE INYECCIÓN DE ACEITE | OIL INJECTION PUMP | POMPA INIEZIONE BENZINA | POMPE D'INJECTION D'HUILE

new

REF	OEM
REC6R4-13200-02	6R4-13200-00 6R4-13200-01 6R4-13200-02

150 - 200 HP
V6
2T/Strokes

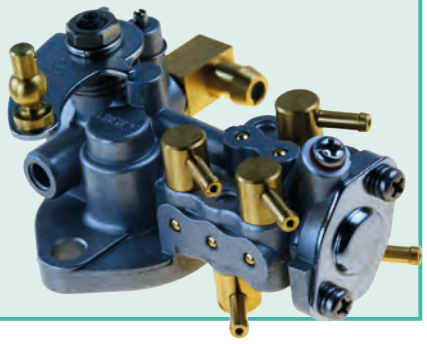

new

REF	OEM
REC6E5-81900-01	6E5-81900-01

2T/Strokes

Instalada en el depósito
Installed in the tank
Installato nel serbatoio
Installé dans le réservoir



ACEITE | OIL | OLIO | HUILES

REF	OEM			
REC2TU6	YMD-63021-01	1 L	6	2 STROKES
REC2TU3	YMD-63021-04	5 L	3	TC-W3
REC5W40U6		1 L	6	SAE 5W40
REC5W40U3		5 L	3	
REC10W30U6	YMD-63050-01	1 L	6	SAE 10W30
REC10W30U3	YMD-63050-04	5 L	3	
REC10W40U6	YMD-63060-01	1 L	6	SAE 10W40
REC10W40U3	YMD-63060-04	5 L	3	
REC25W40U3		5 L	3	SAE 25W40

RECLUBE

new



REF	OEM			
RM92-858026QB1U6	92-858026QB1	1 L	6	2 STROKES
RM92-858027QB1U3	92-858027QB1	3,8 L	3	
RM92-8M0086220U6	92-8M0086220	1 L	6	SAE 10W30
RM92-8M0086221U3	92-8M0086221	4 L	3	



RM92-858026QB1U6 RM92-858027QB1U3 RM92-8M0086220U6 RM92-8M0086221U3

BOMBA DE COMBUSTIBLE MECÁNICA | FUEL PUMP MECHANICAL | POMPA BENZINA MECCANICA | POMPE À ESSENCE MECANIQUE

new

REF	OEM	2T STROKES	4T STROKES
PAF20-05050000	6AH-24410-00		✔

F9.9H (2009+)
F13.5B (2007-09)
F15C,E,M (2007+)
F20B,E,M (2007+)





new

REF	OEM	2T STROKES	4T STROKES
REC68V-24410-00	68V-24410-00		✔

F100B (2003-10)
F100C (2001-07)
F90 (2003-04)
F75A, T (2003-04)
F100A (2003-06)
F80A (2002-07)
F115A, TR, J (2000-10)



REF	OEM	2T STROKES	4T STROKES
REC6E5-24410-03	6E5-24410-01-00		✔

V4
V6 (1989-03)



REF	OEM	2T STROKES	4T STROKES
PAF15-07140000	66M-24410-11		✔

F9.9/13.5/15



REF	OEM	2T STROKES	4T STROKES
REC68T-24410-00-00	68T-24410-00 68T-24410-01		✔

F6A/B/M (2000-09)
F8C/M/E/D/PF/G (2000+)
F9.9F/M/E/G/J/L (2008+)



REF	OEM	2T STROKES	4T STROKES
PAF25-05130000	62Y-24410-04		✔

F20/25//30/40/45/50/60



REF	OEM	2T STROKES	4T STROKES
PAF4-04090000	67D-24410-03		✔

F4



REF	OEM	2T STROKES	4T STROKES
REC692-24410-00	692-24410-00 6A0-24410-00 6A0-24410-05 6A0-24410-03 6A0-24410-04		✔

25-85HP



REF	OEM	2T STROKES	4T STROKES
REC6A0-24410-04	6A0-24410-00 6A0-24410-01 6A0-24410-02 6A0-24410-03 6A0-24410-04		✔

20 - 90 HP (1985-92)



REF	OEM	2T STROKES	4T STROKES
REC6C5-24410-00	6C5-24410-00		✔

F30B (2009+)
F40A/D/H/F (2006+)
F50F/T/H/J/G (2005+)
F60A/B/C/D/F/G/T (2005+)



BOMBA DE COMBUSTIBLE ELECTRICA / FUEL PUMP ELECTRIC

REF	OEM		2T STROKES	4T STROKES
REC68F-13907-01	68F-13907-01	REC66K-14984-00	✔	

VZ, Z150 (2000-07)
VZ, Z175 (2001-07)
V, L, Z200 (2000-07)



REF	OEM		2T STROKES	4T STROKES
REC63P-13907-03	63P-13907-03 63P-13907-02 63P-13907-01 63P-13907-00	REC63P-14984-00		✔

F150 A/AET/AETL/AETX/AET1/AET2/BET/BETX/DET/DET/DETX
F150 TRC/TXRC/TLRC/TR/TLRD/TLR/TLRF/TRG/TXR/TRF
(2004+)



REF	OEM		2T STROKES	4T STROKES
REC69J-13907-03	69J-13907-03 69J-13907-02 69J-13907-01 69J-13907-00 69J-13907-04	REC68V-14984-00		✔

F200 A/AETX/AET/AETU
F200 TXRA/TXRB/TXRC/TXRD/TR/TXR/TXRF
F225 A/AETU/AETX/AET/TXRA/TXRB/TXRC/TXRD/TXRF
F225 TXR/TR/TURD/TURC
(2002-10)



REF	OEM		2T STROKES	4T STROKES
REC69J-24410-02	69J-24410-02 69J-24410-01 69J-24410-00	REC6P2-14984-00		✔

F200 A/AETX/AET/CETX
F200 TXRA/TXRB/TXRC/TXRD/TR/TXR/TXRF
F225 A/AETU/AETX/AET/B/BETU/BETX/CET/CETL
F225 TXRA/TXXB/TXRC/TXRD/TXR/TXRF/TR/TURD/TURC
F250 AET/AETX/AETU/A/BET/
BETX/BETU
F250 TXR/TURF/TXRF
(2002-11)



REF	OEM		2T STROKES	4T STROKES
REC6AW-13907-00	6AW-13907-00 6P2-13907-00	REC6AW-14984-00		✔

F200 C/ CETX (2006-11)
F225 B /BETX/CET/CETL (2006-11)
F225 BETU/BETX/A/AETU/AETX/TURF/TRG/TXRF (2006-11)
F250 A/B/T (2006-11)
F350 AET/AETU/AETX/TRG/TURG (2008-11)



POMPA BENZINA ELETTRICA / POMPE À ESSENCE ELECTTRIQUE

REF	OEM		2T STROKES	4T STROKES
REC66K-13907-00	66K-13907-00 65L-13907-00	REC66K-14984-00		✔

225G (1999-02)
250BETO (1997-02)
L/SX250 TXR (2000-02)
225FETO/FETOX (2003)



REF	OEM		2T STROKES	4T STROKES
REC67H-13907-00	67H-13907-00	REC66K-14984-00		✔

225G/GETOL/FETO (2002-04)
250B/BETO/TXRA (2002-04)



REF	OEM		2T STROKES	4T STROKES
REC60V-13907-00	60V-13907-00	REC66K-14984-00		✔

Z, LZ 250 (2003-07)
Z, LZ 300 (2003-07)



REF	OEM		2T STROKES	4T STROKES
REC68V-13907-00	68V-13907-00 68V-13907-01 68V-13907-02 68V-13907-03 68V-13907-04	REC68V-14984-00	✔	✔

Z, LZ 250DET/TR/FET (2003-07)
Z, LZ 300AET/TR/TX (2004-07)
LF/FL/F115A,T (2000-06)



new

REF	OEM		2T STROKES	4T STROKES
REC866169T01	6C5-13907-00	REC6C5-14984-00		✔

F40D/G/H (2006+)
T/FT/F50F/H/T (2005+)
T/FT/F60A/B/C/F/T (2005+)
F70A (2011+)
F75C/T (2005-09)
F80A/B/C (2005+)
F90A/B/T (2005+)
F100D (2005+)



MEMBRANAS Y JUNTAS DIAPHRAGMS & GASKETS MEMBRANA E GUARNIZIONI MEMBRANES ET JOINTS

REF	OEM
REC6G1-24411-00	6G1-24411-00

3-15HP



REF	OEM
REC6E0-24411-00	6E0-24411-00

4C/5C/AC



REF	OEM
REC6E0-24471-00	6E0-24471-00

4HP



REF	OEM
REC6G1-24471-00	6G1-24471-00

6-8HP



REF	OEM
REC677-24471-01	677-24471-01

E8D/9.9D/15D



REF	OEM
REC63V-24411-00	63V-24411-00

9.9
13.5
15HP



REF	OEM
REC677-24411-02	677-24411-02

9.9>15HP



REF	OEM
REC648-24411-00	648-24411-00

20>70HP



REF	OEM
REC692-24411-00	692-24411-00

20>90HP



REF	OEM
PAF25-05130005	62Y-24471-00

F25>F80HP



REF	OEM
REC663-24411-00	663-24411-00

25>90HP



REF	OEM
REC6J8-24471-00	6J8-24471-00

30HP



REF	OEM
REC6E5-24411-00	6E5-24411-00-00

115/150/175/200HP



REF	OEM
REC6E5-24471-00	6E5-24471-00

115>250HP



REF	OEM
REC6G1-24431-01	6G1-24431-01

3A/MSH
6C/CEM/D/DEM/TRV/MSH/CMH
8C/CEM/TRV/MSH/CMH/MH
9.9F
13.5AWH
15F



REF	OEM
REC6E0-24434-00	6G1-24431-01

4AC/MSH/AS/A
5C/CS/CMH



REF	OEM
REC6E0-24435-00	6E0-24435-00

4AC/MSH/AS/A
5C/CS/CMH



REF	OEM
REC677-24435-01	677-24435-01

9.9D
15D

20DM/DEO
25NE/NEMO



REF	OEM
REC648-24434-01	648-24434-01

20C/CM
25Q/D/B/BMH
25V/VE
E30HMH
30G/H
40V/VM/VE/YE
C40
E40
E40X
40X
50G/GEO/GETO/H/D
55B/BE
60FEO/FETO/TLR
E60H
70B/BETO
75CETO/AE
E75B
80A/AE
85A/AE
90A/AEO/AET



REF	OEM
REC648-24435-02	648-24435-02

20C/CM
25Q/D/B/BMH
25V/VE
E30HMH
30G/H
40V/VM/VE/YE
C40
E40
E40X
40X
50G/GEO/GETO/H/D
55B/BE
60FEO/FETO/TLR
E60H
70B/BETO
75CETO/AE
E75B
80A/AE
85A/AE
90A/AEO/AET



REF	OEM
REC650-24431-A0	650-24431-A0

25-300HP



REF	OEM
REC6E5-24435-00	6E5-24435-00

100A/TLR
115A/ETN/BET/B/BICET/TLR
130BETO
140AETO
150AETO/ETN/FETO
175AETO/DETO/BETO
200AETO/ETN
V200/G/BETO
220AET
225DET/BETO
250AET
Z300



REF	OEM
REC6E5-24434-02	6E5-24434-02

100A/TLR
115A/ETN/BET/B/BICET/TLR
130BETO
140AETO
150AETO/ETN/FETO
175AETO/DETO/BETO
200AETO/ETN
V200/G/BETO
220AET
225DET/BETO
250AET
Z300



JUNTAS VST — VST GASKETS — GUARNIZIONE VST — JOINTS VST

new

REF	OEM
REC68V-14984-00	68V-14984-00

Z, LZ 250DET/TR/FET (2003-07)
Z, LZ 300AET/TR/TX (2004-07)
LF/FL/F115A,T (2000-06)



new

REF	OEM
REC6CB-14984-00	6CB-14984-00

F115 + (2012+) NEW MODEL



new

REF	OEM
REC63P-14984-00	63P-14984-00

F150 A/AET/AETL/AETX/AET1/AET2/BET/BETX/DET/DET/DETX
F150 TRC/TXRC/TLRC/TR/TLRD/TLR/TLRF/TRG/TXR/TRF
(2004+)



new

REF	OEM
REC6C5-14984-00	6C5-14984-00

F40D/G/H (2006+)
T/FT/F50F/H/T (2005+)
T/FT/F60A/B/C/F/T (2005+)
F70A (2011+)
F75C/T (2005-09)
F80A/B/C (2005+)
F90A/B/T (2005+)
F100D (2005+)



new

REF	OEM
REC66K-14984-00	66K-14984-00

Z, LZ 250 (2003-07)
Z, LZ 300 (2003-07)



new

REF	OEM
REC6AW-14984-00	6AW-14984-00

F200 C/ CETX (2006-11)
F225 B /BETX/CET/CETL (2006-11)
F225 BETU/BETX/A/AETU/AETX/TURF/TRG/TXRF (2006-11)
F350 AET/AETU/AETX/TRG/TURG (2008-11)



new

REF	OEM
REC6P2-14984-00	62P-14984-00

F200 A/AETX/AET/CETX
F200 TXRA/TXRB/TXRC/TXRD/TR/TXR/TXRF
F225 A/AETU/AETX/AET/B/BETU/BETX/CET/CETL
F225 TXRA/TXXB/TXRC/TXRD/TXR/TXRF/TR/TURD/TURC
F250 AET/AETX/AETU/A/BET/BETX/BETU
F250 TXR/TURF/TXRF
(2002-11)



new

REF	OEM
REC6CB-13016-00	6CB-13016-00

F115 +



REGULADORES DE PRESIÓN COMBUSTIBLE | FUEL REGULATOR | REGOLATORE BENZINA | REGULATEUR DE PRESSION D'ESSENCE

new

REF	OEM
REC63P-13906-00	63P-13906-00

F150 (2004+)
63P/64P/6BM/6BN



new

REF	OEM
REC6P2-13906-00	6P2-13906-00

F200 (2006-11)
6AL / 6AM
F225 (2007-11)
6AS/6AT/6BB
F250 (2006-11)
6BR/ 6BS/6P



new

REF	OEM
REC69J-13906-00	69J-13906-00

F200 (2002-07)
60L / 60M
F225 (2005-07)
69J / 69K



INYECTORES | INJEKTOR | INIETTORE | INJECTEURS

INYECTOR | INJEKTOR | INIETTORE | INJECTEUR

new

REF	OEM
REC6L5-13761-00	65L-13761-00



new

REF	OEM
REC6D8-13761-00	6D8-13761-00

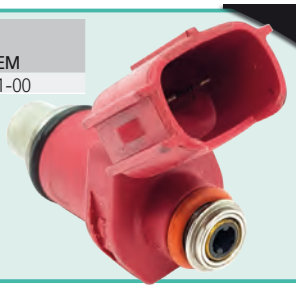

new

REF	OEM
REC6BG-13761-00	6BG-13761-00



new

REF	OEM
REC68V-8A360-00	68V-8A360-00 68V-13761-00



new

REF	OEM
REC6C5-13761-00	6C5-13761-00



new

REF	OEM
REC6P2-13761-00	6P2-13761-00



new

REF	OEM
REC63P-13761-01	63P-13761-00/01



new

REF	OEM
REC69J-13761-00	69J-13761-00



P. 37

REF
STA93008
STA93016



P. 38

REF
GE22207



GUÍA INYECTORES Y SENSORES · GUIDE INJECTORS & SENDERS · GUIDA INIETTORI E SENSORI · GUIDE INJECTEURS ET SONDES







					TPS	MAP
F20 F/G	6GX & 6HY	2017+	REC6FM-13761-00			
F25 G/M	6FM	2017+	REC6FM-13761-00			
F30B	6BT	2009+	REC6BG-13761-00			
F40 A/F	6BG	2009	REC6BG-13761-00			
F40 D/H/G	6AK & 6CY	2006+	REC6C5-13761-00		REC6C5-85885-00	REC68F-83688-00
F50 F/T/H/G/J	6C1 & 6C2	2005+	REC6C5-13761-00		REC6C5-85885-00	REC68F-83688-00
T50 A/B/T	6C2	2005+	REC6C5-13761-00		REC6C5-85885-00	REC68F-83688-00
F60 A/B/C/D/E/F/G/T	6C5 & 6C6	2005+	REC6C5-13761-00		REC6C5-85885-00	REC68F-83688-00
T60 A/B/T	6C6	2005+	REC6C5-13761-00		REC6C5-85885-00	REC68F-83688-00
F70 A	6CJ	2011+	REC6C5-13761-00		REC6C5-85885-00	REC68F-83688-00
F75 T/ B	6D61	2005	REC6D8-13761-00		REC6C5-85885-00	REC68F-83688-00
F80 C	6CK	2009-12	REC6D8-13761-00		REC6C5-85885-00	REC68F-83688-00
F80 B	6D7	2005+	REC6D8-13761-00		REC6C5-85885-00	REC68F-83688-00
F100 D	6D9	2005+	REC6D8-13761-00		REC6C5-85885-00	REC68F-83688-00
F115 A/ T	68V & 68W	2000-11	REC68V-8A360-00		REC68V-85885-00	REC68V-82380-00
F115A	68V & 68W	2012-15	REC68V-13761-10		REC68V-85885-00	REC68F-83688-10
F115 B	6EK & 6EL	2014+	REC6EK-13761-00		REC6C5-85885-00	REC68F-83688-10
F130 A	6EM	2015+	REC6EK-13761-00			REC68F-83688-10
F150 A/B/C/D/T	63P & 64P	2004-05	REC63P-13761-01	REC63P-13906-00	REC69J-85885-00	REC63P-82380-00
F150 A/T/B/D	63P & 64P	2005+	REC63P-13761-01	REC63P-13906-00	REC6S1-85885-00	REC63P-82380-00
F150 B/F	6BM & 6BN	2012+	REC63P-13761-01	REC63P-13906-00	REC6S1-85885-00	REC63P-82380-00
F150 C/G	6HP & 6HR	2017+	REC6DA-13761-00			REC68F-83688-10
F175 A/C	6FA,6HS,6HT	2014+	REC6DA-13761-00			REC68F-83688-10
F200 A/ T	60L & 60M	2000-05	REC69J-13761-00	REC69J-13906-00	REC69J-85885-00	REC68V-82380-00
F200 A/ T	60L & 60M	2006-07	REC69J-13761-00	REC69J-13906-00	REC6S1-85885-00	REC68V-82380-00
F200 C	6AL & 6AM	2006	REC6P2-13761-00	REC6P2-13906-00		
F200 A/B/C	6AL,6AM,6S19,6S29	20012+	REC6P2-13761-11	REC6P2-13906-00		
F200 B/F	6DA,6DB,6DV,6DW	2013+	REC6DA-13761-00			REC68F-83688-10
F225 A/ T	69J & 69K	2000-07	REC69J-13761-00	REC69J-13906-00	REC69J-85885-00	REC68V-82380-00
F225 A/B/C	6AS,6BB & 6AT	2012-15	REC6P2-13761-11	REC6P2-13906-00		
F250 A/T	6P2 & 6P3	2006-11	REC6P2-13761-00	REC6P2-13906-00		
F250 A/T	6P2 & 6P3	2012-13	REC6P2-13761-11	REC6P2-13906-00		
225G/F	250B	1999-03	REC6L5-13761-00			

CARBURADOR COMPLETO FULL CARBURATOR CARBURATORE COMPLETO CARBURATEUR COMPLET

REF	OEM
REC6F6-14301-06	6F6-14301-06

new

E40G (2008+)

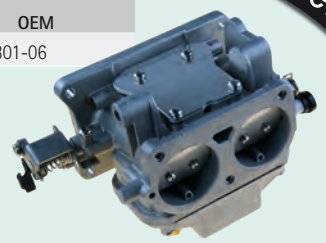

REF	OEM
REC6B4-14301-00	6B4-14301-00

new

E15D (2003+)

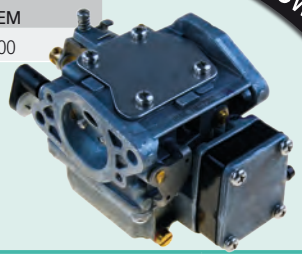

REF	OEM
PAF2.6-04000200	69M-14301-21

F2.5 ALL (2003+)



REF	OEM
PAF4-04140000	67D-14301-03

F4 (1998-05)



REF	OEM
REC6G1-14301-01	6G1-14301-01

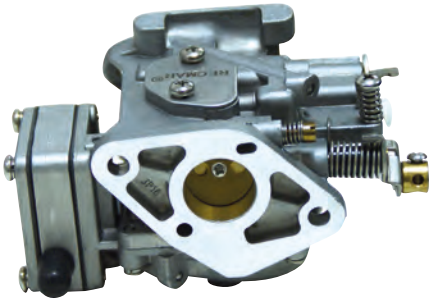

REF	OEM
PAF25-05070000	65W-14901-12

F25 ALL (1999-06)

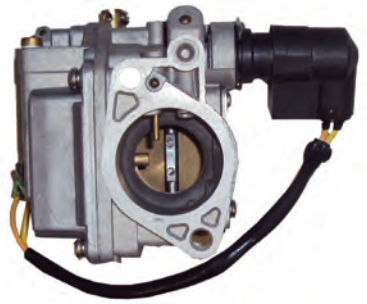

REF	OEM
REC61N-14301-04	61N-14301-04

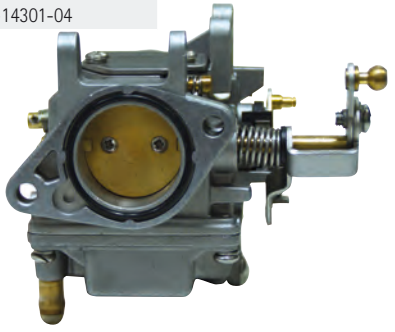

REF	OEM
REC6L5-14301-03	6L5-14301-03

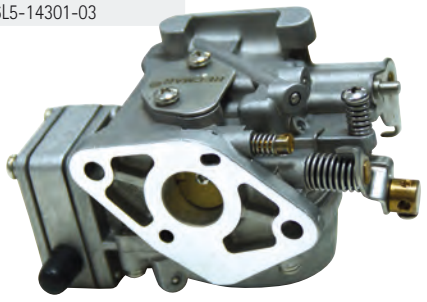

REF	OEM	
PAF15-07090000	66M-14301-00	Arranque manual Manual starter Messa in moto manuale Démarrage manuell
PAF15-07090000W	66M-14301-00	Arranque eléctrico Electric starter Messa in moto elettrica Démarrage électriquel

F9.9, F13.5, F15 (1998-07)



PAF15-07090000W



PAF15-07090000

REF	OEM
REC6E3-14301-05	6E3-14301-05



REF	OEM
REC66T-14301-60	66T-14301-60



REF	OEM
REC6A1-14301-03	6A1-14301-03

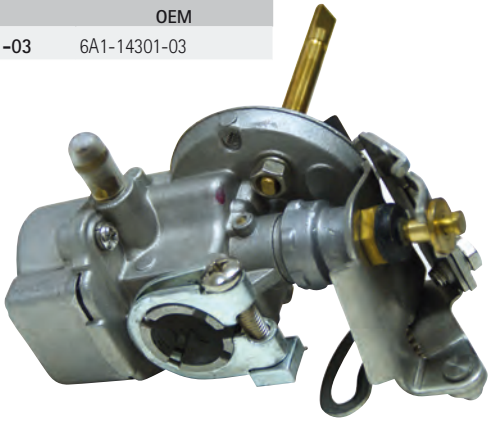



P. 99

REF	OEM	
REC63V-14301-00	63V-14301-00	REC63W-13610-00

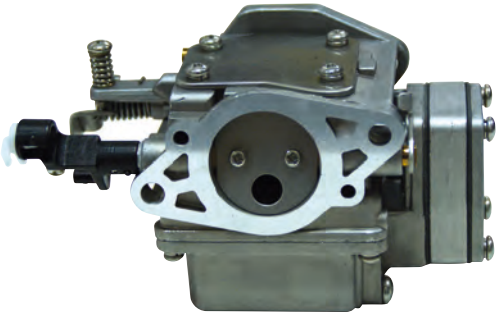

KIT 3 CARBURADORES — KIT 3 CARBURETORS — KIT 3 CARBURATORI — KIT DE 3 CARBURATEURS

REF	OEM
REC6K5-14301-03	6K5-14301-03 + 6K5-14302-03 + 6K5-14303-03

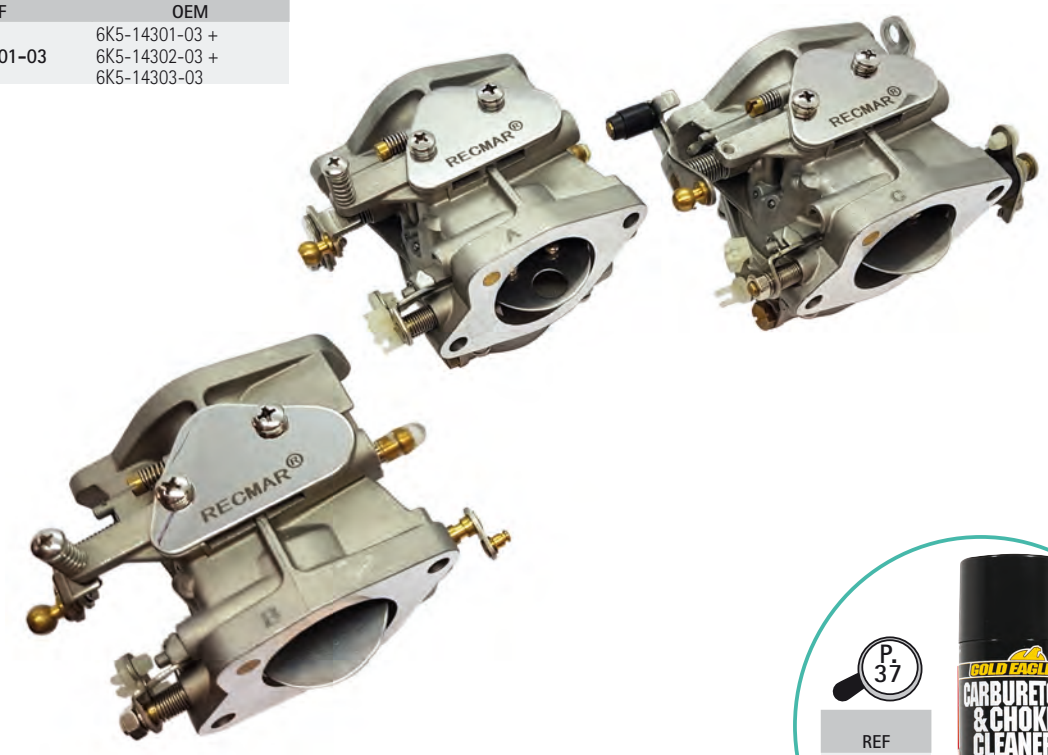

P. 37

REF
GEGC15



GUÍA CARBURADORES | GUIDE CARBURETORS | GUIDA CARBURATORI | GUIDE DES CARBURATEURS

			CARB	KIT		
2B, BMHS, MSHA, MSHB, MSHC, MSHD	6A1-6A14	1985-05	REC6A1-14301-03	REC6A1-W0093-01		
3A, AMHL, MSH	6L5	1988-99	REC6L5-14301-03	REC6G1-W0093-00	REC6G1-14985-00	REC6G1-14546-00
3A, AMHS, AMHL, AMH, MSHA, MSHB	6L50-6L59	2001-10	REC6L5-14301-03	REC6G1-W0093-00	REC6G1-14985-00	REC6G1-14546-00
AMH, AMHS	6L5A-6L5F	2011-15	REC6L5-14301-03	REC6G1-W0093-00	REC6G1-14985-00	REC6G1-14546-00
4AS	-6,00E+001	1994-95	REC6E3-14301-05		REC6E7-14385-00	
4AC	-6,00E+000	1994-98	REC6E3-14301-05		REC6E7-14385-00	
4CMHS, CMHL	6GP1	2016	REC6E3-14301-05		REC6E7-14385-00	
5C	-6,00E+003	1986-99	REC6E3-14301-05		REC6E7-14385-00	
5CS	-6,00E+004	1987-95	REC6E3-14301-05		REC6E7-14385-00	
5CMH	6M0	1994	REC6E3-14301-05		REC6E7-14385-00	
5C, CMHS, CMHL	6E30-6E39	2001-10	REC6E3-14301-05		REC6E7-14385-00	
5CMH, CMHS, CMHL	6E3A-6E3F	2011-15	REC6E3-14301-05		REC6E7-14385-00	
6C, CEM	6H6	1984-96	REC6G1-14301-01	REC6G1-W0093-00	REC6G1-14985-00	REC6G1-14546-00
6D, DEM	6H8	1984-96	REC6G1-14301-01	REC6G1-W0093-00	REC6G1-14985-00	REC6G1-14546-00
6J	6H6	1986	REC6G1-14301-01	REC6G1-W0093-00	REC6G1-14985-00	REC6G1-14546-00
6C, MSH, TRV	6M8	1997-98	REC6G1-14301-01	REC6G1-W0093-00	REC6G1-14985-00	REC6G1-14546-00
6C	6M80	2001	REC6G1-14301-01	REC6G1-W0093-00	REC6G1-14985-00	REC6G1-14546-00
6D	6M90-6M91	2001-02	REC6G1-14301-01	REC6G1-W0093-00	REC6G1-14985-00	REC6G1-14546-00
6CMH, CMHS, CMHL, MSHA, MSHB, MSHG, MSHD, MH, MHL, CWH	6M81-6M89	2002-10	REC6G1-14301-01	REC6G1-W0093-00	REC6G1-14985-00	REC6G1-14546-00
CMH, CMHL, CM, MH	6M8A-6M8B	2010-12	REC6G1-14301-01	REC6G1-W0093-00	REC6G1-14985-00	REC6G1-14546-00
8N	6G1	1984	REC6G1-14301-01	REC6G1-W0093-00	REC6G1-14985-00	REC6G1-14546-00
8C, CEM	6G1	1984-95	REC6G1-14301-01	REC6G1-W0093-00	REC6G1-14985-00	REC6G1-14546-00
8J	6G1	1986	REC6G1-14301-01	REC6G1-W0093-00	REC6G1-14985-00	REC6G1-14546-00
8C, TRV, MSH	6N0	1997-98	REC6G1-14301-01	REC6G1-W0093-00	REC6G1-14985-00	REC6G1-14546-00
8C, MSHZ, MSHA	6N00-6N09	2001-10	REC6G1-14301-01	REC6G1-W0093-00	REC6G1-14985-00	REC6G1-14546-00
8CMH, CMHS, CMHL	6N0A-6N0C	2011-12	REC6G1-14301-01	REC6G1-W0093-00	REC6G1-14985-00	REC6G1-14546-00
9.9FMH, FMHS, FMHL, FEMH, MHW, MSH, MSHZ, MSHA, MSHB, MSHC	63V-63V9	1995-10	REC63V-14301-00	REC63V-W0093-00	REC63V-14985-00	REC6G1-14546-00
FMH, FMHS, FMHL, MH	63VA-63VJ	2011-16	REC63V-14301-00	REC63V-W0093-00	REC63V-14985-00	REC6G1-14546-00
13.5AWH	63V	1998	REC63V-14301-00	REC63V-W0093-00	REC63V-14985-00	REC6G1-14546-00
13.5AMH, AMHS, AMHL	66S1-66S2	2003-04	REC63V-14301-00	REC63V-W0093-00	REC63V-14985-00	REC6G1-14546-00
15F.FEMH, FMHS, MHW, MSH, MSHA	63W-63W1	1995-02	REC63V-14301-00	REC63V-W0093-00	REC63V-14985-00	REC6G1-14546-00
E15CMHS	65F2	2003	REC63V-14301-00	REC63V-W0093-00	REC63V-14985-00	REC6G1-14546-00
E15D	6B4	2003+	REC6B4-14301-00	REC63V-W0093-00	REC63V-14985-00	REC6G1-14546-00
15FMHS, FMHL, FMH, MH, MSHB, MSHC, MSHG	63W2-63W9	2003-10	REC63V-14301-00	REC63V-W0093-00	REC63V-14985-00	REC6G1-14546-00
15FMHS, FMHL, FMH, MH	63WA-63WG	2011-16	REC63V-14301-00	REC63V-W0093-00	REC63V-14985-00	REC6G1-14546-00
25VE	61R	1996	REC61N-14301-04	REC61N-W0093-00	REC6L2-14385-00	REC61N-14392-00
25VM	61R	1997	REC61N-14301-04	REC61N-W0093-00	REC6L2-14385-00	REC61N-14392-00
E25A	61N	1998	REC61N-14301-04	REC61N-W0093-00	REC6L2-14385-00	REC61N-14392-00
25VM	61R0	2001	REC61N-14301-04	REC61N-W0093-00	REC6L2-14385-00	REC61N-14392-00
30G	61T	1996	REC61N-14301-04	REC61N-W0093-00	REC6L2-14385-00	REC61N-14392-00
30GE	61T	1997	REC61N-14301-04	REC61N-W0093-00	REC6L2-14385-00	REC61N-14392-00
40X, XW	66T	1998-00	REC66T-14301-60	REC66T-W0093-01	REC6E5-14385-02	REC6E5-14546-00
40XMH	66T4-66T8	2003-05	REC66T-14301-60	REC66T-W0093-01	REC6E5-14385-02	REC6E5-14546-00
40XMH, XMHS, XMHL	66TG-66TR	2009-12	REC66T-14301-60	REC66T-W0093-01	REC6E5-14385-02	REC6E5-14546-00
E40X, MLH	66T	1998-00	REC66T-14301-60	REC66T-W0093-01	REC6E5-14385-02	REC6E5-14546-00
E40X, XMH, XMHS, XMHL, MLHZ	66T0-66T8	2001-05	REC66T-14301-60	REC66T-W0093-01	REC6E5-14385-02	REC6E5-14546-00
E40X, XMHS, XMHLXMH, XMHX	66TA-66TR	2006-12	REC66T-14301-60	REC66T-W0093-01	REC6E5-14385-02	REC6E5-14546-00
E60H, HMHD, HMHDS, HMHDL, ELHB, MHZ, MLHA, HMHDX, HWHD	69D0-69D9	2001-10	REC6K5-14301-03	REC6H3-W0093-02	REC6G1-14985-00	REC6H3-14590-00
E60HMHD, HMHDS, HMHDL, HWDL	69DA-69DC	2011-12	REC6K5-14301-03	REC6H3-W0093-02	REC6G1-14985-00	REC6H3-14590-00
E60HE, HM, E-60H	6K5	1996-00	REC6K5-14301-03	REC6H3-W0093-02	REC6G1-14985-00	REC6H3-14590-00

JUNTAS CARBURADORES — CARBURETOR GASKES — GUARNIZIONI CARBURATORI — JOINTS DE CARBURATEUR

new

REF	OEM
REC6H4-14984-00	6H4-14984-00

25 - 90 HP

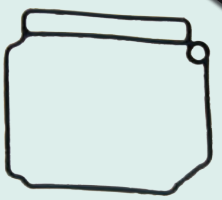

new

REF	OEM
REC6F5-14483-00	6f5-14483-00

E40/40J (2003+)

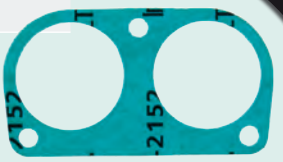

REF	OEM
REC6F5-14384-00	6F5-14384-00

E40GMH/JMH
40GWH/JWH



REF	OEM
REC6F5-14398-00	6F5-14398-00

E40GMH/JMH
40GWH/JWH



REF	OEM
REC677-14384-01	677-14384-01

E8D/DMH
9.9D
15D



REF	OEM
REC677-14227-00	677-14227-01

E8D/DMH
9.9D
15D



REF	OEM
REC6E7-14227-00	6E7-14227-00

9.9D
15D



REF	OEM
REC63V-14984-00	63V-14984-00

9.9F/FM/FEM/MS/MH/E9.9DMH
13.5AW
15F/FEM/MSH/FMH/MH
E15DMH



REF	OEM
REC63V-14126-00	63V-14126-00

9.9F/FM/FEM/MS/MH/E9.9DMH
13.5AW
15F/FEM/MSH/FMH/MH
E15DMH



REF	OEM
REC6L2-14399-00	6L2-14399-00

20DM/D/DEO/MLH
E25A
25VE/VM/B/BMH/BWH/HMH/NMH/NE/N/
MLH/D
30G/GE
E30HMH



REF	OEM
REC6L2-14384-00-00	6L2-14384-00

20DM/D/DEO/MLH
E25A
25VE/VM/B/BMH/BWH/HMH/NMH/NE/N/
MLH/D
30G/GE
E30HMH



REF	OEM
REC648-14384-01-00	648-14384-01

20C/CM
25D/DE
30A



REF	OEM
REC6H3-14457-01	6H3-14457-01

25Q
40V/TLR/H
C40T
50G/H
E60H
60F/TR
70B



REF	OEM
REC66T-14384-01	66T-14384-01

E40XM/X/MLH/XW
40XW/XM



REF	OEM
REC66T-14536-01	66T-14536-01

40X/E40X/E40M



REF	OEM
REC676-14984-00-00	676-14984-00

75A/AE/AET/AEM
E75B
85A/AE/AET/AED



REF	OEM
REC64D-14384-1	64D-14384-01

100A/AETO/TLR
115A/B/BE/CE/BETO
130BETO
140AETO
150CET/ETD/AETO/
CETO
175AETO/BETO/ET
200ETD
200CETO/AET/BET
225BET/AET
175D/DET
150F/FET/TXR/AET
200AET/TLR/F/FET
225D/DET
115B/CET/TXR/TLR
130BET
250G/GET



KITS CARBURADORES CARBURETOR KITS KIT CARBURATORI KIT CARBURATEUR

REF	OEM
REC6A1-W0093-01	6A1-W0093-01

2B (1985-1988)



REF	OEM
REC677-W0093-00	677-W0093-00

9.9D (1985)
15D(1985)



REF	OEM
REC6G1-W0093-00	6G1-W0093-00

3A/AMH//MSH/ (1988-07)
6C/CEM/N/J (1984-96)
8C/CEM/N/J (1984-96)



REF	OEM
REC6E7-W0093-01	6E7-W0093-04

9.9D (1990-93)
15D (1990-93)



REF	OEM
REC67D-W0093-00	67D-W0093-00

F4 (1999-02)
F4A/AMH/MSH (1998-02)



REF	OEM
REC6L2-W0093-00	6L2-W0093-00

20D/M (1998-11)
25N/M (1988-14)

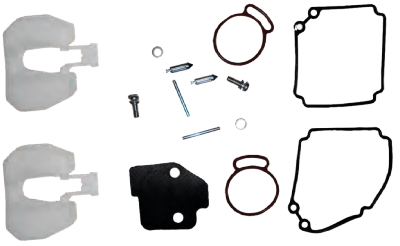

REF	OEM
REC66M-W0093-01	66M-W0093-01

F9.9C/FT9.9D (1998-08)
F15A/ELH/MHZ/PL (1998-07)



REF	OEM
REC689-W0093-02	689-W0093-02

20C/CM (1992-02)
25D/DE (1992-01)
30A (1992)



REF	OEM
REC63V-W0093-00	63V-W0093-00

9.9MH/FMH (1995-12)
E9.9
13.5AMH (2003-04)
15FMH/MH (1995-12)
E15DMH (2003)



new

REF	OEM
REC8542561	65W-W0093-02

F20A (2006-09)
F25A/E (2006-09)
FT/T25B/T (2006-09)
F40B (2006-09)
F30A (2006-09)

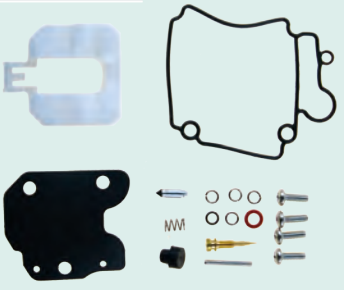

REF	OEM
REC6H4-W0093-03	6H4-W0093-03

25QEO (1993-1994)
40V/VM/VE (1995-14)
C40T/TL (1995-02)
40YET (2005-07)
50H/HR/HM/HW/HE (1995-03)



REF	OEM
REC6E9-W0093-02	6E9-W0093-02

40G/QE/QE-2/QM (1992-99)



REF	OEM
REC6H2-W0093-10	6H2-W0093-10

25B/BETO (1994-1995)
50G/GE (1993-1998)
60FE/TL/TR (1992-2007)
70B/BE (1992-2014)



REF	OEM
REC6F6-W0093-00	6F6-W0093-00

E40 (2003)

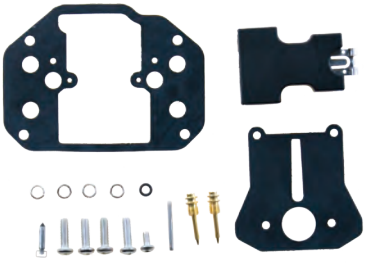

REF	OEM
REC61N-W0093-00	61N-W0093-00

25VE/VM (1996-01)
25B/BMH/BW (2001-10)
E30HMH (2003)
30G/GE (1996-00)
30HMH/HW (2003-12)



REF	OEM
REC6E9-W0093-03	6E9-W0093-03

40QEZ/QWC (1997-98)
C40 2Cyl (1995-98)

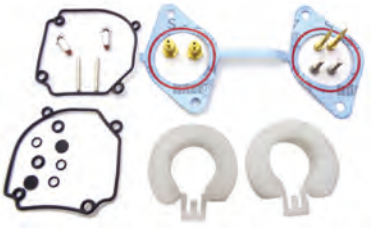

REF	OEM
REC6H4-W0093-01-00	6H4-W0093-01

40H/E (1985-88)
50D (1985-88)



REF	OEM
REC696-W0093-00	696-W0093-02

E48CMH (2003)
55B/BE/BM (1992-02)
E55CMH (2003-05)

Para dos carburadores
For two carburetors
Contenuto per due carburatori
Pour 2 carburateurs

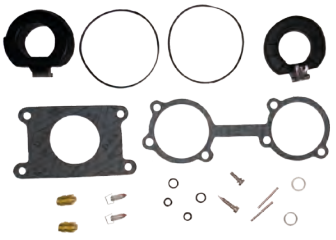

REF	OEM
REC66T-W0093-01	66T-W0093-01

40XMH/XW (2000-13)
E40X/MLH/XMH (2000-13)



new

REF	OEM
REC84419M	696-W0093-01 696-W0093-02

E48CMH (2003)
55B/BE/BM (1992-02)
E55CMH (2003-05)

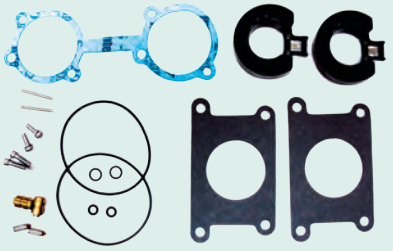

REF	OEM
REC6H1-W0093-01-00	6H1-W0093-01

60FE-T/FEO (1985-91)
70B/BEH/CEL (1985-90)



REF	OEM
REC6H3-W0093-02	6H3-W0093-02

E60H/MHZ/MLH/HMHD/HW/
HEHM (1997-14)



REF	OEM
REC6H0-W0093-00	6H0-W0093-00

C80 (1997)

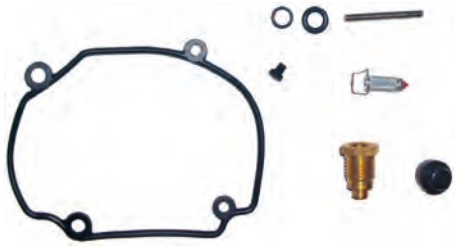

REF	OEM
REC6H1-W0093-10	6H1-W0093-10

75CET (1998-2014)
75TLR (2000-02)
80A (2000-02)
90AE/TR/TL (1992-14)



REF	OEM
REC67F-W0093-00	

F80A/TLR/ (1999-2001)
F100A/TLR/TRZ/TLR (1999-2001)

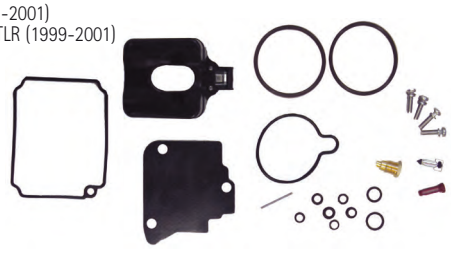

REF	OEM
REC6E5-W0093-07	6E5-W0093-07

115BE/B (1996-2002)
115C/CET (2007-13)
130B/9BET (2007)



REF	OEM
REC6N6-W0093-02	6N6-W0093-02

115BETO/CETO (1990-91)
L/130 BETO (1990-91)



REF	OEM
REC6E5-W0093-08	6E5-W0093-08

115 BE (1997)



REF	OEM
REC6E5-W0093-06	6E5-W0093-06

115B/BETO/CEO/CETO (1992-1995)
130BETO (1993-1995)
L150CETO (1992-1995)
175BETO (1992-95)
200BETO (1992-95)
200CETO (1992-93)
225BETO (1993-95)



REF	OEM
REC64D-W0093-00	64D-W0093-00

150A/AET/GET/FET/F (1996-00)
175DET/FET (1996-00)
200F/FET/G/GET (1996-00)
225D/DET (1996-97)



REF	OEM
REC6K7-W0093-09	6K7-W0093-09

225AET (1987-91)
PROV200 (1991)
150CET (1990-91)
175 BETO (1990-91)
200BET/ET (1990-91)
225BET(1990-91)



REF	OEM
REC61A-W0093-01	61A-W0093-01

225C/CET (1994-95)
250B (1995-02)
250A/AET (1992-06)



AGUJA CARBURADOR NEEDLE VALVE

REF	OEM
REC61N-14392-00	62Y-14392-00

2.5>60HP



REF	OEM
REC6G1-14546-00	6G1-14546-01

8>40HP



REF	OEM
REC626-14390-90	626-14390-90

9.9D/15D



REF	OEM
REC677-14343-68	677-14343-68

9.9D/15D



REF	OEM
REC6E8-14390-12	6E8-14390-12

9.9-15HP
E8D/9.9D/15D



REF	OEM
REC6E5-14546-00	6E5-14546-00

25-250HP



SPILLO CONICO CARBURATORE SIEGE, POINTEAU ET GICLEUR

REF	OEM
REC6F5-14390-21	6F5-14390-21

40G/E40G
40J/E40J



REF	OEM
REC6F6-14341-00	6F6-14341-00

40G/40J
E40G/E40J



REF	OEM
REC696-14590-01	696-14590-01

48-55HP
E48CMH
E55CMH



REF	OEM
REC6H3-14590-00	6H3-14590-01

E60/60FE/TR
70BET/TR
F80-F100



REF	OEM
REC688-14947-00	688-14947-00

75A/AE
85A/AE



REF	OEM
REC692-14590-01	692-14590-00 692-14590-01

75A,C,TLR (1990-16)
80A (1984-02)
85A (1990-03)
90A,T (1984-18)



TORNILLOS CARBURADOR BOLT SCREW

REF	OEM
REC624-42542-00	90387-06119

3>300HP



REF	OEM
REC647-14323-00	647-14323-00

E8D
4A/MS
9.9D
20C
5C
15D
25D
30A



VITE CARBURATORE VIS DE CARBURATEUR

REF	OEM
REC6F5-14323-00	6F5-14323-01

E40G/E40J
40G/40J



REF	OEM
REC692-14923-00	692-14923-00

40>90HP



REF	OEM
REC679-14923-00	679-14923-00

9.9F/M
E9.9D
15F/M
E15D

13.5 AM
8N/C/J
6C/D/TR/M
3A



REF	OEM
REC663-14923-00	663-14923-00

E48C
55B
E55CMH



REF	OEM
REC6A0-14325-00	6A0-14325-00

15>300HP



REF	OEM
REC6E5-14328-01	6E5-14328-01

115>225HP



REF	OEM
REC50M-14355-00	50M-14355-00

20>50HP



REF	OEM
REC64D-14394-00	64D-14394-00

115-225HP



REF	OEM
REC66T-14992-00	66T-14992-00

40X/E40X/E40M



REF	OEM
REC6E5-14323-03	6E5-14323-03

115>250



VÁLVULA DE LÁMINAS — VALVE OF SHEETS — VALVOLA — CLAPET D'ADMISSION

REF	OEM
REC6F6-13610-00	6F6-13610-00

40G/E40G
40J/E40J

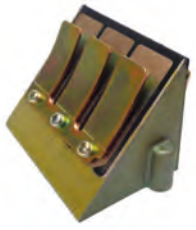

REF	OEM
REC688-13610-00	688-13610-00

75A,C,T / E75 (1990+)
80A (1984-02)
85A (1900+)
90A,TR,TLR (2003+)
2T/Strokes



new

REF	OEM
REC63W-13610-00	63W-13610-00

9.9/15 HP (1995+)
2T/Strokes

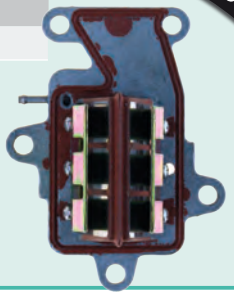

new

PASADOR DE BOYA — PIN FLOAT — SPINOTTO GALLEGGIANTE — AXE DE FLOTTEUR

REF	OEM	
REC688-14548-00	688-14548-00	3>90HP
REC676-14186-00	676-14186-00	3>100HP
REC647-14386-10	647-14386-10	4AC/M/AS FT/F9.9A/B 5C/CM/CS T9.9EL 9.9D F8AM/BM 15D
PAF25-05070019	6H4-14548-00	9.9>100HP
REC6E5-14386-01	6E5-14386-01	9.9>200HP

REF	OEM	
REC663-14548-00	663-14548-00	E48C 55B E55CMH
REC6E5-14386-02	6E5-14386-02	115>200HP





BOYAS — FLOATS

REF	OEM
REC6G1-14985-00	647-14323-00

3A/M, E60, 8C-M/T, 60F
70B, 40N-H, 50E-D, 6C/M/D



REF	OEM
REC647-14385-00	647-14385-00

4AC, 5C, 9.9D, 15D



REF	OEM
REC6E7-14385-00	6E7-14385-00

4AC, 5C, E8D, 9.9D, 15D



REF	OEM
REC676-14966-00	679-14966-00

8>100HP



REF	OEM
REC63V-14985-00	63V-14985-00

9.9F-M, 13.5A, 15F-M, F20, F25, F30, F40



REF	OEM
REC6L2-14385-00	6L2-14385-00

13.5>60HP

GALLEGGIANTE — FLOTTEUR DE CARBURATEUR

REF	OEM
REC648-14385-00	648-14385-00

20C, 25D, 30A



REF	OEM
REC6F6-14385-00	6F6-14385-00

40G/J, E40G/J



REF	OEM
REC676-14985-01	676-14985-01

40Q, 75A, E75B, 80A, 85A, 90A/E



REF	OEM
REC6E5-14385-02	6E5-14385-02

40X, E40, 100A, 115C, 115A-B, 130B, 150F/A, 175D/A, 200A, 200G/F/B, 225D, 225A, 250G



new

REF	OEM	2T STROKES	4T STROKES
REC6H4-14985-01	6H4-14985-00 6H4-14985-01 650-14385-00 6M6-14385-00	✔ 25-90 hp	✔ 75-100 hp



CONECTOR DE CARBURADOR — ACCELEROGRAPH CONTROL — CONTROLLO DELL'ACCELEROGRAFO — ATTACHE TIGE D'ACCELERATEUR

new

REF	OEM
PAF15-07000016	661-41262-01 661-41262-02



ELEMENTO FILTRO DEL CARBURADOR | ELEMENT FILTER (CARB INLET) | FILTRO CARBURATORE | FILTRE DU CARBURATEUR

REF	OEM
REC67F-14371-01	67F-14371-01

F75 (2003-04)
F80 (2002-03)
F90 (2003-04)
F100 (2002-03)



ACELERADOR | ACCELERATOR | ACCELLERATORE | ACCELERATEUR

VARILLA DE ACELERADOR | ROD ACCELERATOR LEVER | ASTA ACCELLERATORE | TIGE LEVIER ACCELERATEUR

REF	OEM
REC6H3-41217-00	6H3-41217-00

50G/E60H
60F/T
70B/T



REF	OEM
REC692-41256-00	692-41256-00

75A/B
80A
85A
90A



REF	OEM
REC688-41217-00	688-41217-00

80A
90A/E



REF	OEM
REC6G5-41217-00	6G5-41217-01

150/200ETN
150/200AETO
175AET-O
225AETO



SISTEMA ELÉCTRICO
ELECTRIC SYSTEM

SISTEMA ELETTRICCO
SYSTÈME ÉLECTRIQUE

SENSORES SENSORS SENSORE CAPTEURS

SENSOR TPS — TPS SENDER — SENSORE TPS — CAPTEUR TPS

REF	OEM
REC6C5-85885-00	6C5-85885-00



REF	OEM
REC6S1-85885-00	6S1-85885-00



REF	OEM
REC69J-85885-00	69J-85885-00



REF	OEM
REC68V-85885-00	68V-85885-00



SENSOR MAP — MAP SENSOR — SENSORE MAP — CAPTEUR MAP

REF	OEM
REC68V-82380-00	68V-82380-00



REF	OEM
REC68F-83688-10	68F-83688-10



REF	OEM
REC63P-82380-00	63P-82380-00



REF	OEM
REC68F-83688-00	68F-83688-00



SENSOR IAC — IAC SENSOR — SENSORE IAC — CAPTEUR IAC

REF	OEM	2T STROKES	4T STROKES
REC13650-52G00	63P-85886-00		✔

F150 --> F350



REF	OEM	2T STROKES	4T STROKES
REC13650-56B00	65L-85886-00		✔

F115, F200, F225
L, Z 150/250 HP
V, VZ, Z 200/300HP



P. 90
Guía inyectores y sensores
Guide injectors et senders
Guida iniettori e sensori
Guide injecteurs et sondes

SENSOR TEMPERATURA DEL AGUA | SENSOR, WATER TEMPERATURE | SENSORE TEMPERATURA ACQUA | CAPTEUR DE TEMPERATURE

new

REF	OEM
PAF25-05010201	65W-85790-00

F20A (1998-06)
F25A,E,M (1998-09)
T25 / FT25 (1998-09)



new

REF	OEM
PAT40-05000100	6AH-82560-00

F9.9H (2009+)
F13.5B (2007-09)
F15C,E,M (2007+)
F20B, E, M (2007+)



REF	OEM	2T STROKES
REC688-82560-10	688-82560-10	40 - 300 hp (1984-16)



SENSOR ACCELERACIÓN TS | SENSOR | SENSORE ACCELLERATORE TS | CAPTEUR D'ACCELERATEUR TS

new

REF	OEM	2T STROKES	4T STROKES
REC6X2-85885-10	6X2-85885-10 61A-85885-00	✔	✔

80 - 300 HP

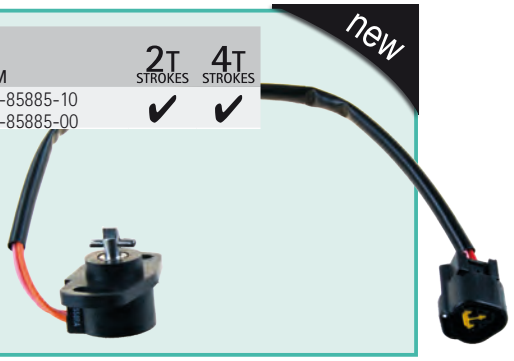

SENSOR PRESIÓN DE ACEITE | SENSOR, OIL PRESSURE | SENSORE PRESIONE DELL'OLIO | SONDE DE PRESSION D'HUILE

new

REF	OEM
PAF15-07010103	65W-82504-00 62Y-82504-10

F9.9 - F40



SENSOR DE OXÍGENO | OXYGEN SENSOR | SENSORE OSSIGENO | SONDE À OXYGENE

REF	OEM
REC67H-8592A-01	67H-8592A-01

LX200/5X200 (2001-05)
DX150/LX150 (2001-05)
SX150/VX150 (2001-05)



REF	OEM
REC68F-8592A-00	68F-8592A-00

200HP (2001-2007)
150HP (2001-2007)
175HP (2001-2007)
L, Z, V-PETO, TLR, NETO



BOBINAS COILS BOBINE BOBINES

BOBINA DE LUZ — COIL LIGHTING — BOBINA LUCE — BOBINE D'ÉCLAIRAGE

REF	OEM	2T STROKES	4T STROKES
REC63V-85533-00	63V-85533-00	✔	

9,9/15 F/M (1995+)
13,5 AM (2003-04)
E9.9/15 (2003)



REF	OEM	2T STROKES	4T STROKES
REC66T-85533-00	66T-85533-00	✔	

E40 (1998+)
40X/M (1998+)



REF	OEM	2T STROKES	4T STROKES
PAF15-07000400	66M-85533-00		✔

F15 ALL (1998-07)
F9.9 ALL (1998-08)
F13.5 ALL (2002-07)

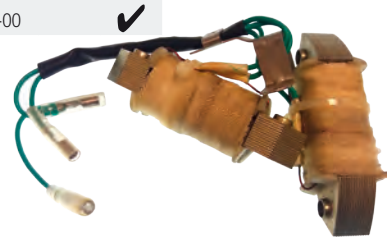

BOBINA DE IGNICIÓN — IGNITION COIL — BOBINA AVVIAMENTO — BOBINE D'ALLUMAGE

new

REF	OEM	2T STROKES	4T STROKES
REC6E0-85570-00	6E0-85570-00	✔	

4A/M/C (1996-18)
5C (1996-15)



new

REF	OEM	2T STROKES	4T STROKES
REC6H3-85570-10	6H3-85470-10	✔	

E60H/M (2001+)
60F (1984-91)
70B/C/E (1984-91)

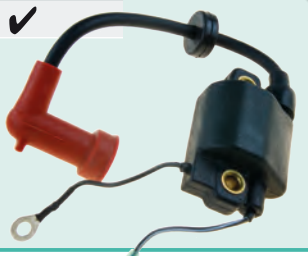

new

REF	OEM	2T STROKES	4T STROKES
REC6B4-85570-01	6B4-85570-00 6B4-85570-01	✔	

E9.9D (2003-13)
E15D (2003+)



REF	OEM	2T STROKES	4T STROKES
REC6R3-85570-01	6R3-85570-01	✔	

200 A/E/F (1997-10)
150 F/T (1994-07)
175D (1996-03)
225D (1996-09)
130 B/T (1994-07)
115 C/T (1994-13)
130 BETO (1994-01)



REF	OEM	2T STROKES	4T STROKES
PAF25-05120000	65W-85570-01		✔

F20A/E (1998-06)
F25A/B/T/M (1998-09)



REF	OEM	2T STROKES	4T STROKES
PAF15-07000600	66M-85570-00		✔

F15 ALL (1998-07)
F9.9 ALL (1998-08)
F13.5 ALL (2002-07)



REF	OEM	2T STROKES	4T STROKES
REC6F5-85570-11	F5-85570-13	✔	

F9.9 (2009+)
F20/25 B/F (2007+)
F13.5 B/M (2007+)
F15 C/M/E (2007-09)



REF	OEM	2T STROKES	4T STROKES
REC697-85570-00	697-85570-00	✔	✔

50G/ETOL (1995-07)
75T/L/A/C/B (1997-14)
85A/E/TDL/X (1997-03)
55 B/M/ET (1995-02)
90A/T/ETOL (1997-14)
60F/T/ETOL (1995-07)
70B/E/ETOL (1995-14)



REF	OEM	2T STROKES	4T STROKES
REC61N-85570-01	61N-85570-00 61N-85570-01	✔	

20 D, DEM, MLH, MSH, DMH, DWO, DWH (6L3 - 6L3A) (1994-11)
E25 A (61N) (1998)
25B, BMH, BWC, BWHVM (61R0 - 69RG) (2001-15)
E25 BMH (63P3 - 69PG) (2003-15)
25 N, NE, MLH, MSH, NMH, NW,
MH (6L2 - 6L2G) (1994-15)
30 G, C30 ELRW (61T - 61T0) (1998-01)
330 HMH (60B3) (2003)



new

REF	OEM	2T STROKES	4T STROKES
REC6A1-85570-00	6A1-85570-00	✔	

2B,C,M (1995-10)



REF	OEM	2T STROKES	4T STROKES
REC697-85570-10	697-85570-11	✔	

55HP 2 Cil. (1989-94)
90A/ETN/AETO (1984-88)
80A (1984-89)



new

REF	OEM	2T STROKES
REC63V-85570-00	63V-85570-00 65E-85570-00	✔

9.9/15/13.5 (1995+) 63V & 63W
E15 (2003) 65F & 65G
9.9/15 F/M (1995-13)
13.5A (2003-04)
E15 (2003)



REF	OEM	2T STROKES	4T STROKES
REC689-81311-40	66M-85570-00	✔	

3A (1985-92)
40Q (1990-98)



REF	OEM	2T STROKES	4T STROKES
REC6E5-85570-11	6E5-85570-11 6E5-85570-10	✔	

115HP 4Cil. (1984-91)
140A/E (1984-89)
150
175
200HP (1984-89)



new

REF	OEM	2T STROKES	4T STROKES
REC67F-85570-00	67F-85570-00		✔

F80A/T (67G-67G5) (1999-06)
F100A/B/C/T (2003-12)



REF	OEM	2T STROKES	4T STROKES
REC66T-85570-00	66T-85570-00	✔	

E40 (1998+)
40X/M (1998+)



new

REF	OEM	2T STROKES	4T STROKES
REC6F6-85530-01	6F6-85530-01	✔	

EK40G (2018)
E40G (2006+)

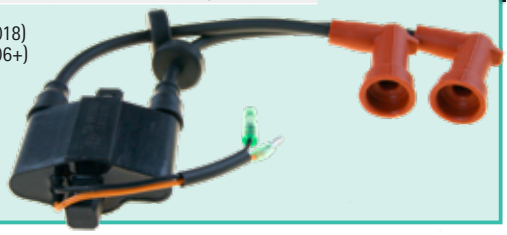

REF	OEM	2T STROKES	4T STROKES
REC6E7-85570-19	6E7-85570-19-00	✔	

9.9/15HP (1988-95)
20C/D (1985-93)
25C/D (1985-93)



new

REF	OEM	2T STROKES	4T STROKES
REC6CB-82310-00	6CB-82310-00		✔

F150C, (2017+)
F175A,C (2014+)
F200F,B,G,C (2013+)
F225F,C,B,H,J (2011+)
F250D,C,F,P (2011+)
F300B,C,A,D,G (2011+)
F350A,C (2012-19)

BOBINA DE T.C.I. — T.C.I. COIL — BOBINE T.C.I. — BOBINE T.C.I.

REF	OEM	2T STROKES	4T STROKES
PAF2.6-04000600	69M-85640-00		✔

F2.5 ALL (2003+)



REF	OEM	2T STROKES	4T STROKES
PAF4-04000038	67D-85640-00		✔

F4 ALL (1998+)



BOBINA DE CARGA — CHARGE COIL — BOBINA DI CARICA — BOBINE DE CHARGE

REF	OEM	2T STROKES	4T STROKES
REC63V-85520-00	63V-85520-00	✔	

15F (1995+)
9,9 F/M (1995+)
13,5 A (2003-04)

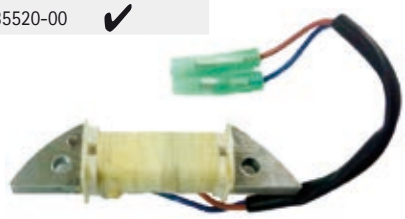

REF	OEM	2T STROKES	4T STROKES
REC66T-85520-00	66T-85520-00	✔	

E40 (1998+)
40X/M (1998+)



REF	OEM	2T STROKES	4T STROKES
PAF15-07000300	66M-85520-00		✔

F15 ALL (1998-07)
F9.9 ALL (1998-08)
F13.5 ALL (2002-07)



new

REF	OEM	2T STROKES	4T STROKES
REC6H3-85520-00	6H3-85520-00	✔	

E60H/M (2001+)
60F (1984-91)
70B/C/E (1984-91)



new

REF	OEM	2T STROKES	4T STROKES
REC6B4-85520-00	6B4-85520-00	✔	

E9.9D / E15D

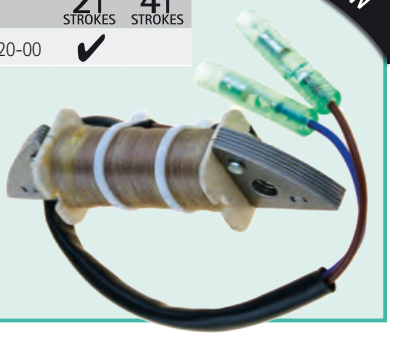

BOBINA DE PULSACIÓN — PULSER COIL — BOBINE ACCENSIONE — BOBINE PULSEUR

new

REF	OEM	2T STROKES	4T STROKES
PAF20-05000100	6AH-85580-00		✔

F9.9H (2009+)
F13.5B (2007-09)
F15C/E/M (2007)
F20/F30 (2009+)



REF	OEM	2T STROKES	4T STROKES
REC63V-85580-01	63V-85580-01		✔

9,9/15 F/M (2003+)
13,5A (2003-04)



new

REF	OEM	2T STROKES	4T STROKES
REC6B4-85580-00	6B4-85580-00	✔	

E9.9D / E15D



REF	OEM	2T STROKES	4T STROKES
REC66T-85580-00	66T-85580-00	✔	

E40 (1998+)
40X/M (1998+)



REF	OEM	2T STROKES	4T STROKES
PAF25-05110000	65W-85580-00		✔

F25 ALL (1998-09)
F40 E
B (2000-09)
F30 A
ERZ
ML (2001-09)



REF	OEM	2T STROKES	4T STROKES
PAF15-07000200	66M-85580-00		✔

F15 ALL (1998-07)
F9.9 ALL (1998-08)
F13.5 ALL (2002-07)



BUJÍAS SPARK CANDELE BOUGIES

2T STROKES		REF CHAMPION	OEM
2	1984	CHAL90C	94703-00001
3	1988	CHAQL86C	94701-00248
5	1984	CHAQL82C CHAL82C	94701-00041
6	1986	CHAQL82C CHAL82C	94701-00041
8	1984	CHAQL82C CHAL82C	94701-00041
09/09/19	1984	CHAQL82C CHAL82C	94701-00041
20	1996	CHAQL82C CHAL82C	94701-00041
25	1999	CHAQL82C CHAL82C	94701-00041
30	1984	CHAQL82C CHAL82C	94701-00041
40	1984	CHAQL82C CHAL82C	94701-00041
50	1995	CHARA8HC	94701-00041
70	1984	CHAQL78C	94701-00195
90B	1984	CHAQL78C	94701-00195
90	1984-00	CHAQL78C	94701-00195
115	1984-05	CHAQL78C	94701-00195
130	1989	CHAQL78C	94701-00195
150 Carb	1996	CHAQL82C CHAL82C	94701-00248
150 EFI	1999-00	CHAQL78C	94701-00195
150 EFI	2000	CHARC12YC	94702-00401
150 MPDI	2000	CHARC12YC	94702-00401
150 VMAX	1997	CHAQL78C	94701-00195
175	1984	CHAQL78C	94701-00195

2T STROKES		REF CHAMPION	OEM
175 VMAX	1992	CHAQL78C	94701-00195
200 LX	1999	CHAQL78C	94701-00195
200 LZ	1999	CHARC9YC4	94702-00399
200 SX	1999	CHAQL78C	94701-00195
200 VX	2000	CHAQL78C	94701-00195
200 Z	2000	CHARC9YC4	94702-00399
225	2000	CHAQL77JC4 CHAL77JC4	94701-00309 94701-00217
250	2000	CHAQL77JC4 CHAL77JC4	94701-00309 94701-00217

4T STROKES		REF CHAMPION	
2,5F	2003	CHAQL86C	94701-00248
4F	1999	CHAQL86C	94701-00248
9.9Fi	1996	CHAZ9Y	94701-00282
9.9T	1996	CHAZ9Y	94701-00282
15F	1999	CHARA8HC	94701-00375
25F	1998	CHARA8HC	94701-00375
30F	2001	CHARA8HC	94701-00375
40F	1999	CHARA8HC	94701-00375
50F	1999	CHARA8HC	94701-00375
60	2002	CHARA8HC	94701-00375







	REF NGK	OEM
2B	NGKBR5HS	94702-00249-00
F2,5A/F4A	NGKBR6HS	94701-00248-00
3A/F6A/F8C/FT8D/F9,9F/F9,9J/FT9,9G/FT9,9L	NGKBR6HS-10	94702-00274-00
F4B/F5A/F6C	NGKCR6HS	94702-00372-00
4A/5C/20C/25D/40X	NGKBR7HS	94701-00110-00
6C/8C/9,9D/9,9F/15D/15F/20D/25N/25V/25B/30D/40H/40V	NGKBR7HS-10	94702-00271-00
F8B	NGKCR5HSB	94701-00300-00
F9,9A/F9,9B	NGKCR6HS	94701-00282-00
F9,9C/FT9,9D/F15A/F25A/FT25B/F30A/F40A/F40B/F50A/FT50B/FT50C	NGKDPR6EA-9	94701-00375-00
F15C/F20B/F25D/F25G/FT25F/F30B/F40F/F50F/F50H/FT50G/FT50J/F60C/F60F/FT60D/FT60G	NGKDPR6EB-9	94702-00418-00
40Q	NGKBR8HS	94701-00195-00
30G/50D/50G/50H/55B/60F/70B/75A/75C/80A/85A/90A/100A/115A/115B/115C/140A/150A/150C/150F/175A/175B/175D/200A/200B /200F/200G/225D/(L)250A/(L)250G	NGKBR8HS-10	94702-00247-00
F60A/FT60B	NGKDPR5EA-9	94701-00406-00
F70A	NGKLKR7E	94702-00429-00
F80A/F80B/F100A/F100B/F100D/F(L)150A/F(L)200A/F(L)225A	NGKLFR5A-11	94702-00391-00
130B/140B/200C/225B/250B/225G (VMAX)	NGKBR9HS-10	94701-00309-00
F(L)115B	NGKLKR6E	94702-00437-00
F(L)115A/F175A/F(L)200C/F(L)200F/F(L)200G/F(L)225B/F225C/F(L)250A/F(L)250B/F(L)300A/F(L)350A/F(L)225F/F(L)250D/F(L)300B	NGKLFR6A-11	94702-00400-00
(L)Z150P/Z150Q (VMAX)	NGKBKR6EKU	94702-00405-00
Z175G/(L)Z200N/Z200P (VMAX)/(L)Z250D/Z250F (VMAX)/(L)Z300A	NGKBKR7EKU	94702-00404-00
STERN-DRIVE ESSENCE	NGKBR6FS	94701-00365-00
WAVERUNNER		
XL800/XLT800/GP800/WB800/GP800R	NGKBR8ES	94701-00204
XLT1200/XL1200LTD/GP1200R/GP1300R	NGKBR8ES-11	94702-00396
SJ650/650T/650TL/650TX/FX1/PRO TX700/WB700/XL700/WVT700/W.RAIDER 760/WVT760/XL760/WB760/GP760/W.RAIDER 1100/ WVT1100/SUV1200/GP1200/XL1200	NGKBR8HS	94701-00195
SJ700/W.RAIDER 700	NGKBR7HS	94701-00110
FX140/FX140 CRUISER/FX160/FX160 CRUISER/FX1100 HO/HO CRUISER/VX 1100 SPORT & DELUXE	NGKCR9EB	94702-00409



VOLANTE DE MOTOR | FLYWHELL | VOLANTE MOTORE | VOLANT MOTEUR

SIN DIENTES (MANUAL) | WITHOUT TOOTH | SENZA DENTI (MANUALE) | MANUEL SANS DENT

new

REF	OEM
PAF20-05000500	6AH-85550-00

F9.9H (2009+)
F13.5B (2007-09)
F15C,E,M (2007+)
F20B, E, M (2007+)



new

REF	OEM
PAF15-07070000	66M-85550-00

F9.9C, M (1998-08)
FT9.9D (1999-08)
F13.5A (2002-07)
F15A,E,M (1998-07)



new

REF	OEM
PAF25-05150000	65W-85550-01

F20/F25 (A) (1998-08)
F40B/E/T (2000-09)
FT/T25 (2000-09)
F30A/E/M (2001-09)



ELÉCTRICO | ELECTRIC | ELETTRICO | ÉLECTRIQUE

new

REF	OEM
PAF20-05000500W	6AH-85550-10

F9.9H (2009+)
F13.5B (2007-09)
F15C,E,M (2007+)
F20B, E, M (2007+)

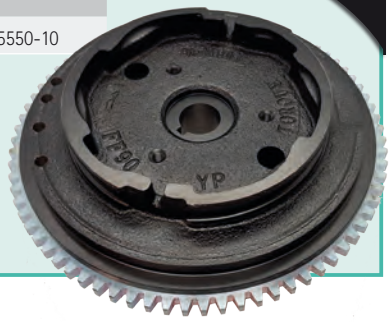

new

REF	OEM
PAF15-07070100W	66M-85550-10

F9.9C, M (1998-08)
FT9.9D (1999-08)
F13.5A (2002-07)
F15A,E,M (1998-07)



MOTORES DE ARRANQUE — STARTERS — MOTORINI AVVIAMENTO — DEMARREUR

REF	OEM			2T STROKES	4T STROKES	
PH130-0061	6L2-81800-10, 11, 12 682-81800-10, 11, 12	12V 0.4 kw	10 CCW	✔		REC89-825096T01

9.9-15HP (1984-97)
25HP (1988-98)
6HP (1984-90)
8HP (1984-90)



REF	OEM			2T STROKES	4T STROKES	
PH130-0049	689-81800-10, 11, 12, 13	12V 0.6 kw	11 CCW	✔		REC89-825096T01

25-40HP
30HP/20HP

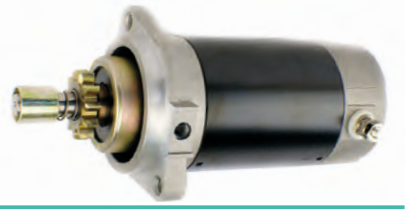

REF	OEM			2T STROKES	4T STROKES	
PH130-0062	6J4-81800-00, 01 6G8-818000-10, 11 6F5-81800-10, 11	12V	11 CCW	✔		REC89-825096T01

30 HP (1987+)
40-50 HP (1989+)



REF	OEM			2T STROKES	4T STROKES	
PH130-0084	66M-81800-00, 01, 02	12V	9 CCW	✔		REC89-825096T01

F9.9, F15, F13.5 (1998-08)



REF	OEM			2T STROKES	4T STROKES	
PH130-0005	6E5-81800-10, 11, 12	12V 1.1 kw	9 CCW	✔	✔	REC61A-81941-00

F45 / F50
115-130 HP V4
150-175-200 HP V6



REF	OEM			2T STROKES	4T STROKES	
PH130-0028	67C-81800-00, 01, 02	12V	9 CCW		✔	PH375-0036

F30 (2000-09)
F40 (2001-09)

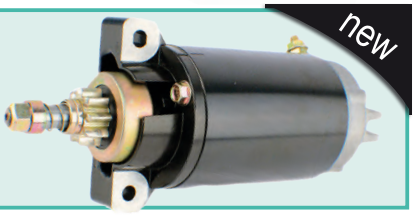

REF	OEM			2T STROKES	4T STROKES	
PH130-0063	6H4-81800-10, 11, 12	12V	9 CCW	✔		P. 114

40-50 HP (1984-1988)

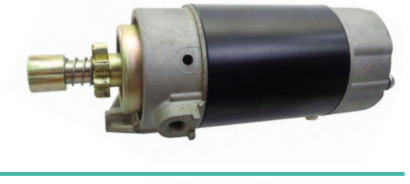

REF	OEM			2T STROKES	4T STROKES	
PH130-0051	99999-03938 61H-81800-00, 01 6K7-81800-10 6N7-81800-00, 01, 10	12V 1.4 kw	9 CCW	✔		PH375-0047

115-250HP V4



REF	OEM			2T STROKES	4T STROKES	
PH130-0059	61A-81800-00, 01 69L-81800-00 69W-81800-00	12V	9 CCW	✔	✔	REC61A-81941-00 REC89-825096T01 (F40/50/60)

V200 (1998+)
F40 (2002-06)
F50 (2003-14)
F60 (2003-07)
225 HWP (1994+)
250 HP (1990+)



REF	OEM			2T STROKES	4T STROKES	
PH130-0050	6H3-81800-10, 11	12V 0.6 kw	9 CCW	✔		REC688-81950-10



50HP (1993-14)
60HP (1991+)
70HP (1984-14)

REF	OEM			2T STROKES	4T STROKES	
PH130-0007	99999-03249 697-81800-10, 11, 12 676-81800-10	12V 1.0 kw	9 CCW	✔		P. 114



55-60HP 2 cyl

REF	OEM			2T STROKES	4T STROKES	
PH130-0058	688-81800-10, 11, 12	12V	9 CCW	✔		REC688-81950-10



75 HP (1994-99)
85 HP (1991-96)
90 HP (1984-14)
85HP (1992-03)
80HP (1993-02)

REF	OEM			2T STROKES	4T STROKES
PH130-0056	6CJ-81800-00 6C5-81800-00 68F-81800-00, 01, 03	12V 1.4 kw	13 CCW	✔	✔



LZ 150-175 HP (2000+)
VZ 150-175 HP (2000+)
Z 150-175 HP (2000+)
LZ 200-Z200 HP (2000+)

REF	OEM			2T STROKES	4T STROKES	
PH130-0034	66M-81800-01, 02	12V	9 CCW		✔	PAF15-05170300W



F9.9
F13.5
F15 HP (2000-08)

REF	OEM			2T STROKES	4T STROKES	
PAF20-05000900W	6AH-81800-00, 01	12V	11		✔	P. 114



F13,5 ALL (2007-09)
F15 (2007-14)
F20 ALL (2007-14)

REF	OEM			2T STROKES	4T STROKES	
PH130-0029	65W-81800-00, 01, 02, 03	12V	9 CCW		✔	PH375-0034



F20
F25HP (1999-09)
F30/F40 (2005-09)

REF	OEM			2T STROKES	4T STROKES
PH130-0057	68V-81800-00, 01, 02	12V 1.4 kw	13 CCW		✔



F80 (2005+)
F100 (2005+)
F115 (2000+)
LF115 (2000+)

REF	OEM			2T STROKES	4T STROKES
PH130-0055	67F-81800-01, 02, 03, 04	12V	1.4 kw 13 CCW		✔

F80 HP (1999+)
F100 HP (1999+)



REF	OEM			2T STROKES	4T STROKES
PH130-0074	69J-81800-00, 01	12V	1.4 kw 13 CCW		✔

F200, F225 HP (2002-2007)



REF	OEM			2T STROKES	4T STROKES
PH130-0073	63P-81800-00 6BR-81800-00, 01	12V	1.4 kw 13 CCW		✔

FL, F150 AET, X, L (2009-11)
FL, F200 CETX (2009-11)
FL, F225 BET
X, U, CET, L (2009-11)
FL, F250 AET, X, U, BET, X, U (2009-11)



REF	OEM			2T STROKES	4T STROKES
PH130-0076	60V-81800-00 60X-81800-00 6C9-81800-00 6D0-81800-00	12V	1.4 kw 13 CCW		✔

250HP (2003-07)



MUELLE DE ARRANQUE — STARTER SPRING — MOLLA AVVIAMENTO — RESSORT DE LANCEUR

new

REF	OEM	2T STROKES	4T STROKES
PAF15-07130107	63V-15713-00	✔	✔

6 - 25 hp



new

REF	OEM	2T STROKES	4T STROKES
REC66T-15713-00	66T-15713-00 6F5-15713-00, 01	✔	✔

25 - 40 hp



TRINQUETE TRACCIÓN PLATO — PAWL, DRIVE — CRICCHETO TRAZIONE PIATO — ENTRAÎNEMENT

new

REF	OEM	2T STROKES	4T STROKES
PAF15-07130202	63V-15741-00	✔	✔

6 - 40 hp



REF	OEM
PAF15-07130203	63V-15767-00
PAF15-07130204	63V-15784-00



PAF15-07130203



PAF15-07130204

CABLE DE MOTOR DE ARRANQUE A BATERÍA — CONNECTION LINE, POWER — CAVO MOTORE DI AVVIAMENTO A BATTERIA — CABLE DE CONNEXION

new

REF	OEM
PAT85-05000023	6C5-82105-01 6H0-82105-02, J2

-60 hp



CABLE DE MOTOR DE ARRANQUE A BATERÍA | CONNECTION LINE, POWER | CAVO MOTORE DI AVVIAMENTO A BATTERIA | CABLE DE CONNEXION

new

REF	OEM
PAT85-05000023	6C5-82105-01 6H0-82105-02, J2

-60 hp



TIRADOR DE ARRANQUE | STARTER HANDLE ASSY | MANIGLIA AVVIAMENTO | POIGNEE DE LANCEUR

new

REF	OEM
PAF4-04130100	6G1-15755-00 6G1-15779-00



PLATO Y PLACA DE ARRANQUE MANUAL | PLATE & DRUM, DRIVE | PLACCA E PIATTO DI AVVIAMENTO MANUALE | TAMBOUR, POULIE

new

REF	OEM	2T STROKES	4T STROKES
PAF15-07130201	63V-15714-00	✔	✔
PAF15-07130001	63V-15716-00	✔	✔

6 - 20 hp



PAF15-07130201



PAF15-07130001

LLAVES DE ARRANQUE | IGNITION STARTER SWITCH | CHIAVI DI ACCENSIONE | CONTACTEUR A CLÉ

MONTAJE EN MANDO DE CONTROL | CONTROL BOX | MONTAGGIO NEL TELECOMANDO | MONTAGE POUR BOITIER DE COMMANDE

REF	OEM	2T STROKES	4T STROKES
PAF15-13000200W	703-82510-12	✔	✔



MONTAJE EN PANEL | DASH MOUNT | MONTAGGIO NEL PANNELLO | MONTAGE POUR TABLEAU DE BORD

REF	OEM	2T STROKES	4T STROKES
REC61B-82510-02	61B-82510-01	✔	



LLAVE DOBLE INSTALACIÓN | DUAL ENGINE APPLICATION | CHIAVE DOPPIA INSTALLAZIONE | POUR INSTALLATION DOUBLE

REF	OEM	2T STROKES	4T STROKES
REC6K1-82510-07	6K1-82510-06	✔	✔



LLAVE CON CHOQUE | PUSH T. CHOKE | CHIAVE CON CONTATTO | AVEC STARTER

REF	OEM	2T STROKES	4T STROKES
REC703-82510-44	703-82510-43	✔	✔



LLAVE PARA MANDO POPERO | KEY FOR STERN CONTROL | CHIAVE PER COMANDO A GUIDA | CONTACTEUR A CLÉ COMPLET

new

REF	OEM	2T STROKES	4T STROKES
REC6H3-82510-03	6H3-82510-00, 01, 02, 03	✔	✔

55B (1992-00)
E60H (1996-97)
75A (1992-95)
85A (1995)



SOLENOIDE RELÉ | SOLENOID RELAY | SOLENOIDE RELE | SOLENOIDE RELAIS

REF	OEM
PH375-0034	65W-81941-00

F20 (1998-09)
F25 (1998-09)
F30 (2001-09)
F40 (2000-09)



REF	OEM
REC688-81950-10	688-81950-10

50G 80A
50D 90A
E60 60F
70B



REF	OEM
REC61A-81941-00	61A-81941-00 6E5-81941-11

150 175
200 115
225 130
250 100HP



new

REF	OEM
REC89-825096T01	6E5-81950-01 6G1-81940-00

6 - 90 HP



REF	OEM
PH375-0042	68V-8194A-00 68N-81940-00

F40 - F200 (2000-16)
Z / LZ / VZ200 (2004-07)
Z / LZ / VZ250 (2003-07)
Z / LZ / VZ300 (2004-07)

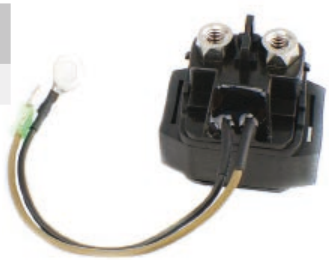

new

REF	OEM
PAF15-05170300W	6G1-81941-10

6 - 90 HP

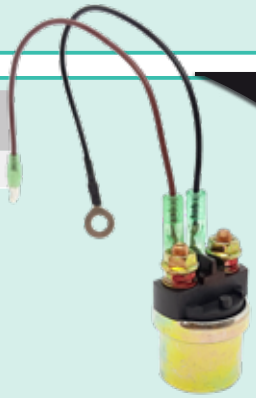

REF	OEM
REC61A-81950-01	61A-81950-00, 01

50 -250 hp (1990-16) 2 Strokes
F20, F25 (1998-09) 4 Strokes



new

REF	OEM
REC68V-81950-00	68V-81950-00

20 - 300 HP



new

REF	OEM
REC6AW-8194A-00	6AW-8194A-00

F30 / F40 (2009+)
F300 (2008-11)
F350 (2008+)



new

REF	OEM
REC60E-81950-00	60E-81950-00

30 - 115 HP



REF	OEM
REC63P-81950-00	63P-81950-00

F20 - F300



new

REF	OEM
REC6AW-81950-00	6AW-81950-00

F150C/G (2017+)
F1475C (2017+)
F200C/G (2013+)
F225C/F (2011+)
F250B/D/C (2009+)
F300A/B/C (2008+)
F350A/C/T (2008+)



new

REF	OEM	12V
REC60V-81950-00	60V-81950-00	

Z250D,T,F (2003-07)
Z300A,T (2004-07)



new

REF	OEM	2T STROKES	4T STROKES
REC6H1-81950-01	6H1-81950-00, 01	✔	✔

30 / 40 / 45 / 50 / 60 HP (1995+)



REF	OEM
PH375-0048	6E5-8195A-01 6E5-8195C-01

100	(1996-01)
115	(1991-13)
130	(1991-07)
150	(1998-07)
175	(1996-03)
200	(1991-10)
225	(1996-09)
F100 A/AET/TLR/TRZ	(1999-06)
F100 BET	(2003-12)
F100 CETL	(2003)
40X/E40MLH	(1998-03)
F80A/AET/TLR	(1999-06)



REF	OEM
PH375-0047	6E5-81950-01

175HP (1991-96)
200HP (1991-10)
225HP (1996-09)
150HP (1996-03)
115HP (1995-13)
100HP (1996-01)
130HP (1991-07)



new

REF	OEM	2T STROKES	4T STROKES
REC68F-8195A-00	68F-8195A-00	✔	✔

150 --> 350 HP



REGULADORES Y RECTIFICADORES — REGULATOR AND RECTIFIERS — REGOLATORI E RADDRIZATORI — REGULATEURS ET RECTIFIEURS

REF	OEM	2T STROKES	4T STROKES
REC6H2-81960-10	6H2-81960-10	✔	

40
50
60
70

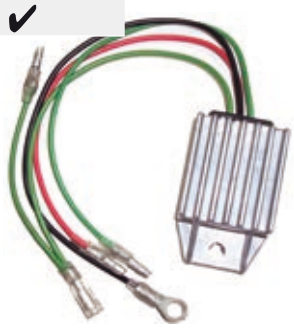

REF	OEM	2T STROKES	4T STROKES
REC67F-81960-12	67F-81960-00		✔

F75AETL (2003)
F80A,TLR,TJRA (1999-06)
F90AET,TRB,TLRB (2003)
F100A,TLR,BET,CET (1999-12)



REF	OEM	2T STROKES	4T STROKES
REC6G5-81960-A0	6G5-81960-A0	✔	

75	(1988-96)	
85	1989-96)	
90	(1984-91)	
115	(1991-96)	
130	(1988-89)	
150	(1984-89)	
150	(1997)	
175	(1984-89)	
200	(1984-89)	

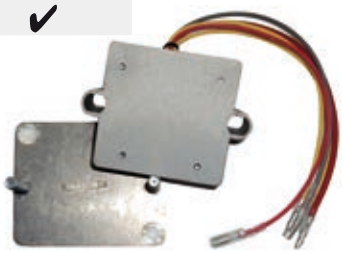

new

REF	OEM	2T STROKES	4T STROKES
PAT85-05030300	6AH-81960-00		✔

F9.9H (2009+)
F13.5B (2007-09)
F15C/E/M (2007+)
F20B/M (2007+)

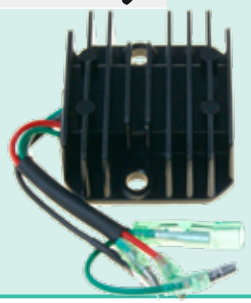

new

REF	OEM	2T STROKES	4T STROKES
REC63P-81960-02	63P-81960-00, 01, 02		✔

F150A,T,B,D,F (2004+)



REF	OEM	2T STROKES	4T STROKES
REC6G1-81970-62	664-81970-60, 61, 62 676-81970-00 6E9-81970-70 6G1-81970-00, 60, 61, 62, A0		✔

4 & 5 HP (1cyl)
6, 8, 9.9, 15, 20, 25, 30, 40 (2 cyl)
40, 50, 55, 60, 70 (3 cyl)

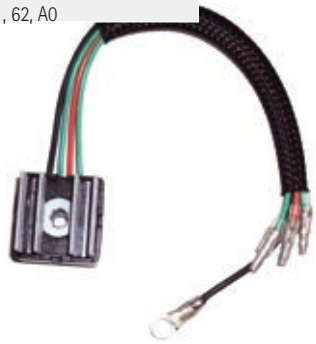

REF	OEM	2T STROKES	4T STROKES
REC6H0-81960-00	6H0-81960-00		✔

75A, AEM, AEHD		693-6922	(1997-02)
85A, AE, AED, AEDL, AEDH, AEDX, AET, AETL, AETX		688-688F	(1997-15)
E115 A, AE, AEL, AMH, AMHL, AET, AETL, AETX		61U0-61UG	(2001-15)



new

REF	OEM	2T STROKES	4T STROKES
REC6R3-81960-10	6R3-81960-10		✔

100A (1991)
115C (1990-13)
130B/T (1990-14)
150C/F/T (1990-13)
175B/D (1990-05)
200B/C (1991-93)
PROV200 (1991-94)
225B (1990-91)

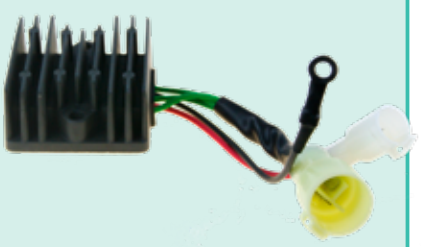

new

REF	OEM	2T STROKES	4T STROKES
REC6P2-81960-03	6P2-81960-02,03		✔

F200A/C (2006-15)
F225A/B/C (2007-15)
F250A/B/T (2006-13)

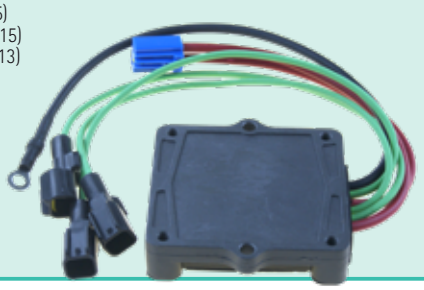

new

REF	OEM	2T STROKES	4T STROKES
REC61A-81960-04	61A-81960-00, 01, 02, 03, 04	✔	

225C/G (1994-03)
250A/B/E/G (1990-10)



new

REF	OEM	2T STROKES	4T STROKES
REC6G8-81960-A1	6G8-81960-A1		✔

F8B (1990-99)
FT9.9D (1999-08)
F9.9C/A/B/M (1990-08)
F13.5A (2005-07)
F15A/M/E/P (1998-07)

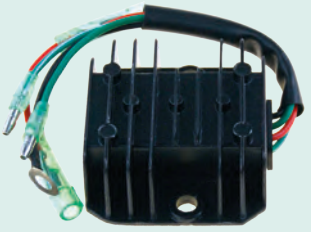

new

REF	OEM	2T STROKES	4T STROKES
PAF15-07060001	6J8-81960-00	✔	✔

6 - 50 HP

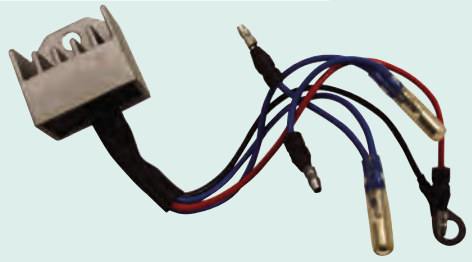

new

REF	OEM	2T STROKES	4T STROKES
REC881346T	68V-81960-00 6D3-81960-00		✔

T/FT/F50 (2005-06)
T/FT/F60C/D/T (2005-06)
F75B/T (2005)
F80B (2005-06)
F100D (2005-06)
F115A/T (2000-06)



new

REF	OEM	2T STROKES	4T STROKES
REC69J-81960-13	69J-81960-10, 11, 12, 13		✔

F200A/T (2003-07)
F225A/T (2003-07)



new

REF	OEM	2T STROKES	4T STROKES
REC60V-81960-05	60V-81960-00, 01, 02, 03, 04, 05	✔	

250D/F/T (2003-07)
300A/T (2004-07)

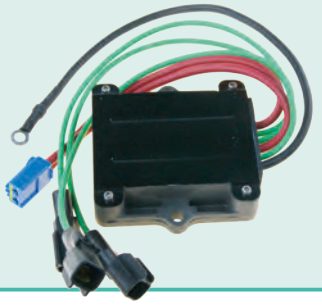



P. 32

CDI Y CAJAS NEGRAS — CDI & POWER PACK — CDI E CENTRALINA — CDI ET BOITIER ELECTRONIQUE

REF	OEM	2T STROKES	4T STROKES
REC688-85540-00	688-85540-00	✔	

E75 BMHD, BMHDL	6925 - 692Y	(2003-15)
75 A, AED, AEDL, AEM, AEHD, AET, AETL	692 -692Y	(1997-15)
75A	692E	(2008)
85, A, AE, AED, AEDL, AEDX, AEHD, AET, AETX	688 - 688F	(1997-15)
85A	6886 - 6887	(2007-08)



new

REF	OEM	2T STROKES	4T STROKES
REC6G9-85540-29	6G9-85540-29 6G9-85540-22 6G9-85540-21 6G9-85540-20		✔

F8B (1985-99)
F9.9B (1985-99)

2 CYL.



new

REF	OEM	2T STROKES	4T STROKES
PAF20-05000300	6AH-85540-00	✔	

F9.9H (2009+)
F13.5 B (2008-09)
F15C/E/M (2007+)
F20B/E/M (2007+)



new

REF	OEM	2T STROKES	4T STROKES
PAF15-07000500	66M-85540-10	✔	

F9.9C, M (2002-07)
F13.5 A (2002-07)
F155A,E,M,P (2002-07)

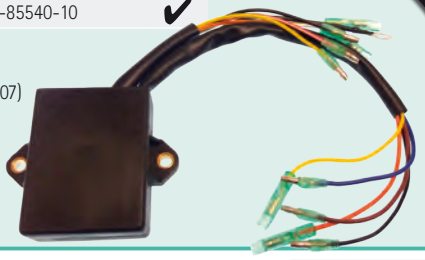

new

REF	OEM	2T STROKES	4T STROKES
REC6H3-85540-11	6H3-85540-10, 11, 12	✔	

3 cyl (1984+)
60F/E60H,E,M
70E,B

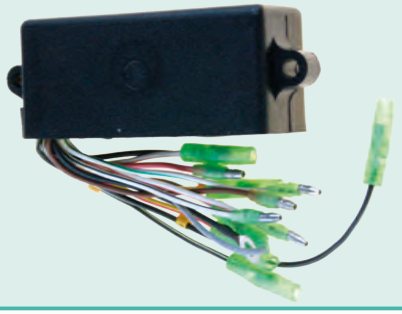

new

REF	OEM	2T STROKES	4T STROKES
REC63V-85540-00-01	63V-85540-00, 01, 02	✔	

9.9 - 15HP (1995+)
63V & 63W



new

REF	OEM	2T STROKES	4T STROKES
REC68T-85540-00	68T-85540-00	✔	

F6A/B/M (2001-05)
T/FT/F8C/M (2000+)
T/FT/F9.9F/M/J (2008+)



new

REF	OEM	2T STROKES	4T STROKES
REC63D-85540-04	63D-85540-00, 01, 02, 03, 04	✔	

3 cyl
C40 (1996-03)
40V,E,Y (1995+) C50 (2000)
50H (1995-03)



new

REF	OEM	2T STROKES	4T STROKES
REC6F6-85540-01	6F6-85540-01	✔	

E40G (2008-16)



new

REF	OEM	2T STROKES	4T STROKES
REC6H3-85540-13	6H3-85540-10, 11, 12, 13	✔	

60F (1984-91)
70B,E (1984-91)
E60H,E (2000+)

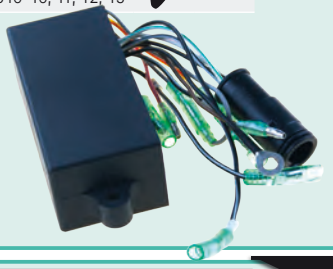

new

REF	OEM	2T STROKES	4T STROKES
REC6H2-85540-13	6H2-85540-10, 11, 12, 13	✔	

50G (1997-07)
60F,T (1997-10)
70B,T (1997-17)



new

REF	OEM	2T STROKES	4T STROKES
REC6A1-85540-01	6A1-85540-00, 01	✔	

2B,M,C (1995-10)



new

REF	OEM	2T STROKES	4T STROKES
REC6G9-85540-29	6G9-85540-20, 21, 22, 29		✔

F8B (1985-99)
F9.9B, M, E (1985-06)



REF	OEM	2T STROKES	4T STROKES
REC63V-85540-00-01	63V-85540-00,01	✔	

9.9, 15HP	(1995-08)
13, 5HP	(2003-04)



REF	OEM	2T STROKES	4T STROKES
REC61N-85540-00	61N-85540-00	✔	

25	(1997-07)
30	(1996-08)
200	(1993)



REF	OEM	2T STROKES	4T STROKES
REC6G0-85540-11	6G0-85540-11	✔	

175	(1986-89)
200	(1986-89)
150	(1988)
225	(1987-89)



REF	OEM	2T STROKES	4T STROKES
REC6E0-85540-71	6E0-85540-71,70	✔	

4	(1984)
5	(1984)



REF	OEM	2T STROKES	4T STROKES
REC689-85540-21	689-85540-21,20	✔	

25	(1984-87)
30	(1984-87)
30	(1989-90)
40	(1990)



REF	OEM	2T STROKES	4T STROKES
REC696-85540-12	696-85540-12,11,10	✔	

6	(1984-99)
8	(1984-04)



REF	OEM	2T STROKES	4T STROKES
REC6F5-85540-22	6F5-85540-22	✔	

E40	(2003)



REF	OEM	2T STROKES	4T STROKES
REC695-85540-11	695-85540-11,12	✔	

E40	(2003)
9.9	1986-95)
15	(1986-95)
20	(1985-02)
25	(1985-02)



REF	OEM	2T STROKES	4T STROKES
REC663-85540-15	663-85540-11,15	✔	

55	(1990-93)



REF	OEM	2T STROKES	4T STROKES
REC6E5-85540-12	6E5-85540-12,11,10	✔	

115	(1984-89)
115	(1991-98)
130	(1988-89)

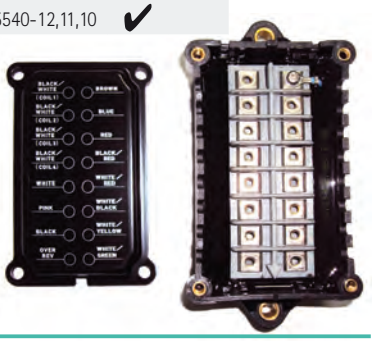

REF	OEM	2T STROKES	4T STROKES
REC6G5-85540-12	6G5-85540-12,11,10	✔	

150HP	(1984-89)

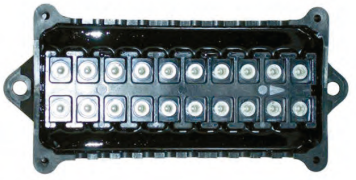

REF	OEM	2T STROKES	4T STROKES
REC66T-85540-00-01	66T-85540-01	✔	

40X/E40X	
MLH	
XW	(1998+)



REF	OEM	2T STROKES	4T STROKES
REC6B4-85540-01	6B4-85540-01	✔	

E9.9 DMH-5 (2003+)
E15 DMH -5 (2003+)



REF	OEM	2T STROKES	4T STROKES
REC688-85540-16	688-85540-16	✔	

75
85



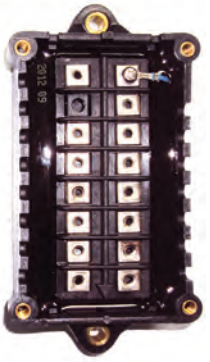

REF	OEM	2T STROKES	4T STROKES
REC6J8-85540-H2	6J8-85540-H2	✔	

25J/EO/SH (1999)
30D/ETOL/EOS/MHS
MHOL, E, L, H
(1999+)



DESCONECTORES DE SEGURIDAD — CUT OFF SWITCHES

REF	OEM
REC688-82575-01	688-82575-01

9.9 --> 250 HP

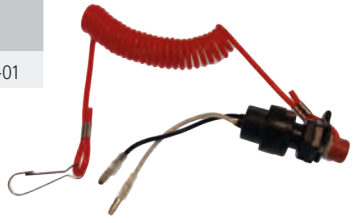

REF	OEM
REC69W-82575-00	69W-82575-00



REF	OEM
REC66T-82575-01	66T-82575-01

E40X
MLHZ
X
MH (2001+)



REF	OEM
REC6G8-81870-00	6G8-81870-00

F8A-B (1986-99)
F9.9A M,E,B (1985-99)
9.9F (1995-2000)
9.9-15-8-6/C-M-D (1984-2002)



CHIAVETTA DI SICUREZZA — COUPE CIRCUIT DE SECURITE

REF	OEM
REC6E9-82575-02	6E9-82575-00

E30/GE/BMH (1996-12)
25V/M/E/B (1996-10)
6/8C/TRV/MSH (1996-12)



new

REF	OEM
PAF4-01090401	682-82556-00



REF	OEM
REC65W-82575-01	65W-82575-01

F2.5
T-F 6-8
F9.9 -F15
9.9F-M
F13.5
F25 (2002+)



REF	OEM
REC6A0-82550-01	6A0-82550-01

9.9D/15D (1985-93)
8N/JCEM (1984-96)
6CEM/6DEM (1984-96)



KITS
Interruptor de encendido para todo tipo de motores fueraborda o intraborda

REF KIT	CUERDA WIRE CORDA CORDON	
REC40970	REC40990	1



KITS
Emergency and stop switch for inboard or outboards.

REF KIT	
GS11292	1



KIT
Interruttore di accensione per tutti i tipi di motori fuoribordo o entrobordo.

REF KIT	CUERDA WIRE CORDA CORDON	
GS11290	GS11291	1



KITS
Coupe circuit de sécurité pour moteur inboard ou hors-bord

REF	
GS11294	1



STARTOR

REF	OEM	2T STROKES	4T STROKES
REC688-85510-10	688-85510-10 688-85510-11	✔	

75	(1988-96)	
85	(1989-96)	
90	(1984-90)	



REF	OEM	2T STROKES	4T STROKES
REC6E5-85510-11	6E5-85510-11,10	✔	

115	(1984-89), (1991-98)	
130	(1988-89)	
150	(1984-89)	



REF	OEM	2T STROKES	4T STROKES
REC688-85510-01	688-85510-00, 01	✔	

E75 BMHD, BMHDL (6925 - 692Y) (2003-15)
75 A, AED, AEDL, AEM, AEHD, AET, AETL (692 - 692Y) (1997-15)
75 A (692E) (2008)
85 A, AE, AED, AEDL, AEDX, AEHD, AET, AETX (688 - 688F) (1997-15)
85 A (6886 - 6887) (2007-08)



REF	OEM	2T STROKES	4T STROKES
PAF25-05140000	65W-85510-10	✔	

F20	(1998-06)	
F25	(1998-09)	
T25/FT25	(2000-09)	
F30	(2001-09)	
F40	(2000-09)	



REF	OEM	2T STROKES	4T STROKES
REC6G5-85510-11	6G5-85510-10	✔	

200 (1984-89)



new

REF	OEM	2T STROKES	4T STROKES
PAF20-05000200	6AH-85510-00	✔	

F9.9 (2009+)
F13.5B (2007-09)
F15C,E,M (2007+)
F20B,M (2007+)

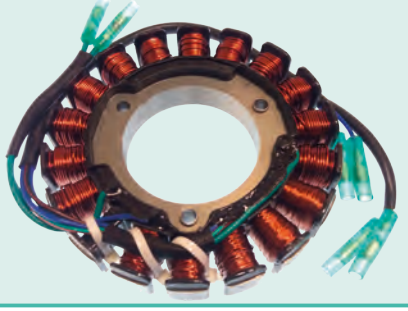

REF	OEM	2T STROKES	4T STROKES
REC6H1-85510-00	6H1-85510-00	✔	

80A
AE (1990-91)
90 AEO
AETO (1990-91)

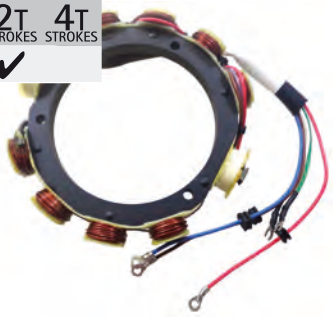

INSTALACIÓN ELÉCTRICA | WIRING HARNESS | INSTALLAZIONE ELETTRICA | INSTALLATION ELECTRIQUE

KIT CONVERSIÓN
Sustituye de 2 a 3 cables.

CONVERSION KIT
Converts 3-wire Tilt and Trim motors to 2-Wire design

KIT CONVERSIONE
Sustituisce da 2 a 3 cavi.

FAISCEAU CONVERTISSEUR 3 A 2 FILS

REF	OEM
PH200-WH01	



INTERRUPTOR POWER TRIM | POWER TRIM SWITCH | INTERRUTTORE POWER TRIM | INTERRUPTEUR DE TRIM

new

REF	OEM
REC6R3-82563-01	6R3-82563-00 6R3-82563-01

100 - 250 HP

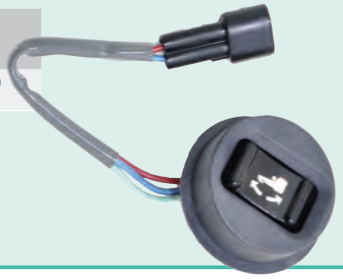

REF	OEM
PAE4-10040100W	703-82563-00, 01

Para mandos 703
For controls 703
Per comandi 703
Pour 703



TRIM COMPLETO BIDIRECCIONAL | COMPLETE TRIM ASSEMBLY | MOTORINO TRIM COMPLETO | MOTEUR DE TRIM

REF	OEM	12V	3	2	2T STROKES	4T STROKES
REC67C-43880-01	67C-43880-00, 01	12V	4	2		✔

T25 / FT25 (68V0 - 68V9) (2001-09)
T25 / FT25 (6BL1 - 6BL8) (2009-15)
F30 (69H1 - 69H9) (2001-09)
F30 (6BT1 - 6BT8) (2009-15)
F40 (67C0 - 67C8) (2001-09)
F40 (6BG1 - 6BG8) (2009-15)



REF	OEM	12V	4	2	2T STROKES	4T STROKES
PH200-T048	6H5-43880-00, 01, 02, 09	12V	4	2	✔	

40-50HP (1984-94)



REF	OEM	12V	3	2	2T STROKES	4T STROKES
PH200-T029	6H1-43880-02	12V	3	2	✔	

40HP (1994)
50-90HP (1992-95)
70-90 (1996)
60-70-90 (1998)
90HP (1992-02)



REF	OEM	12V	3	2	2T STROKES	4T STROKES
PH200-T036	62Y-43880-01, 02 69W-43880-00, 01 CS3-43880-00	12V	3	2	✔	✔

40Y (2005-07)
40V (2003)
C40 (2002)
F40 (2002)
F50
FT50 (2002-07)



REF	OEM	12V	3	2	2T STROKES	4T STROKES
PH200-T035	62X-43880-00, 01, 09	12V	3	2	✔	✔

40V (1995-98)
F45 (1995- 99)
50H (1995-98)
F50 (1995-99)
FT50 (1996-00)



new

REF	OEM	12V	3	2	2T STROKES	4T STROKES
PH200-T041	6H1-43880-00	12V	3	2	✔	

60F (1987-91)
70B (1987-91)
75A (1990-91)
80A (1987-91)
85A (1990-91)
90A (1987-91)



+ relés conversión | relay | rele | relais

REF	OEM	12V	4	2	2T STROKES	4T STROKES
PH200-T044	67F-43880-00	12V	4	2		✔

F75 (2003-04)
F80 (1999-05)
F90 (2003-04)
F100 (1999-05)



REF	OEM	12V	4	2	2T STROKES	4T STROKES
PAT40-10020500	65W-43880-00, 01		4	2		✔

F20AE, AET, DET (1998-15)
F25A, AET, AMH, AW, EH, ELH, MHA, DMH, DET (1998-15)
F45AET/F50TJR (1999)
25J, JEO, ESH (1999)
30D, DETO, DMH (1999-10)
40X/E40X (1998-03)



REF	OEM	12V	4	2	2T STROKES	4T STROKES
PH200-T068	6D8-43880-00, 01,09	12V	4	2		✔

F75
F80
F100

EJE CORTO
SHORT SHAFT
ASSE CORTO
AXE COURT



REF	OEM	12V	4	2	2T STROKES	4T STROKES
REC6D8-43880-09	6D8-43880-00, 09	12V	4	2		✔

F75TR,TLR,BET (2005)
F80AET,BET (2005-06)
F100AET,DET (2005-06)

EJE LARGO
LONG SHAFT
ASSE LUNGO
AXE LONG



REF	OEM	12V	3	2	2T STROKES	4T STROKES
PH200-T069	69J-43880-00, 01 60V-43880-00		3	2		

F200
F225 (2002+)
F250 (2005+)
Z300



new

REF	OEM	12V	2	2	2T STROKES	4T STROKES
REC6AW-43880-02	6AW-43880-00, 01, 02	12V	2	2		✔

F300A (2008-11)
F350A (2008+)



REF	OEM	12V	3	3	ø	2T STROKES	4T STROKES
PH200-T037	688-43880-11 6E5-43880-00, 01, 02	12V	3	3	68,3 mm		✔

60 90
70 115
75 150
80 200HP
85

4 mm



REF	OEM	12V	3	2	2T STROKES	4T STROKES
PH200-T030	6G5-43880-00, 01, 02	12V	3	2	✔	

115-200 (1987-95)
225 (1990-94)



REF	OEM	12V	4	2	2T STROKES	4T STROKES
PH200-T057	6AE-43880-00, 01, 03, 04 68W-43880-03 67H-43880-00	12V	4	2		✔

225
250HP
115
225 (1997-02)



REF	OEM	12V	3	1	2T STROKES	4T STROKES
PH200-T045	6C5-43880-00, 01		3	1	✔	✔

F40 (2006-10)
F60 (2006-10)
F50 (2005-10)
FT60 (2006-10)
40-50HP (1985-92)



REF	OEM				2T STROKES	4T STROKES
PH200-T050	61A-43880-00, 01	12V	3	4	✔	

225
250HP



new

REF	OEM				2T STROKES	4T STROKES
REC63P-43880-22	63P-43880-10 63P-43880-11 63P-43880-12 63P-43880-22	12V	3	2		✔

F150A/B/C/D/F/G (2012+)
F175A,C (2018+)
F200B,C,F,G (2018+)



POWER TRIM COMPLETO — COMPLETE POWER TRIM ASSEMBLY

REF	OEM	2T STROKES	4T STROKES
REC18-6865	63P-43880-03-00 64E-43880-02-40 68V-43880-03-40	✔	✔

3 RAM
115-225HP

SHOWA SYSTEM



new

REF	OEM	2T STROKES	4T STROKES
REC63P-43800-20	63P-4380003, 04, 06, 07, 20 64E-43880-02-40 68V-43880-03-40	✔	✔

115-220 HP (2003+)
SHOWA SYSTEM



MOTORINO POWER TRIM COMPLETO — POWER TRIM COMPLET

new

REF	OEM	2T STROKES	4T STROKES
PAT40-10000000	65W-43800-02-4D 65W-43800-03-4D 65W-43800-21-4D 65W-43800-22-8D 65W-43800-23-8D 65W-43800-20-4D 65W-43800-01-4D 65W-43800-00-4D	✔	✔

F20 / F25
E40 / 40X
30D

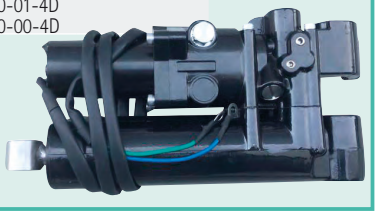

new

REF	OEM	2T STROKES	4T STROKES
PAF60-06000000	6C5-43800-11, 12		✔

F40/ F50/ F60 (2016+)



new

REF	OEM	2T STROKES	4T STROKES
REC6H1-43800-17-8D	6H1-43800-17-8D 6H1-43800-16-4D 6H1-43800-15-4D 6H1-43800-13-4D 6H1-43800-14-4D	✔	

50 - 90 HP

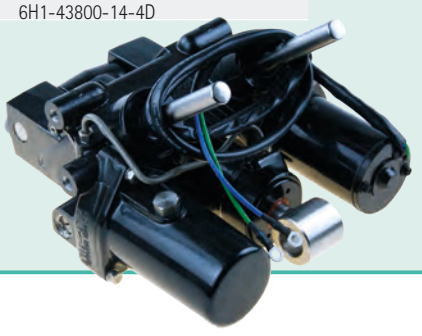

DESPIECE PISTÓN TRIM | PARTI PISTONE TRIM | PARTI PISTONE TRIM | PIECES VERIN DE TRIM

	REF	OEM					UN.
	REC64E-43821-05	64E-43821-00, -05 64E4382100, 64E4382105	TORNILLO CILINDRO EXTREMO	SCREW	VITE	VIS	2
	REC48630-96J03	64E-43821-08, 09, 00 64E-43820-08, 09, 00 6AW-4380R-00	TAPÓN PARA SHOWA SYSTEM	CAP FOR SHOWA SYSTEM	TAPPO PER SHOWA SYSTEM	NEZ DE VERIN DE TRIM POUR SHOWA SYSTEM	2
1	REC48630-94900	67F-4380R-01, -00 67F-43811-00 61A-43821-00, -01, -09	TORNILLO CILINDRO EXTREMO	SCREW	VITE	VIS	2
	REC48630-92J00	6EK-4380R-00 64E-43821-05 63P-43811-20, -10 64E-43811-02 61A-43811-00 6AW-4380R-01	TAPÓN PARA SHOWA SYSTEM	CAP FOR SHOWA SYSTEM	TAPPO PER SHOWA SYSTEM	NEZ DE VERIN DE TRIM POUR SHOWA SYSTEM	2
2	REC64E-43822-00	64E-43822-00	SELLO	SEAL OIL	PARAOLIO	JOINT TORIQUE	2
3	REC64E-4384J-00	64E-4384J-00	SELLO	SEAL OIL	PARAOLIO	JOINT TORIQUE	2
4	REC6G5-43864-00	6G5-43864-00	SELLO	SEAL OIL	PARAOLIO	JOINT TORIQUE	2

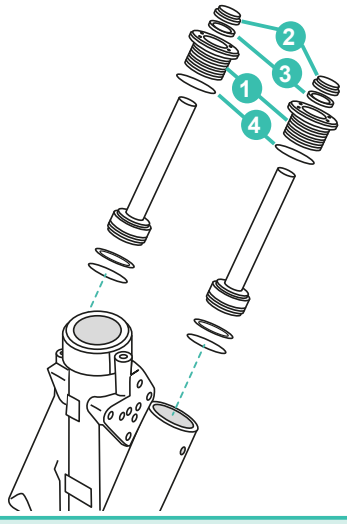

new

REF	OEM
REC48630-94900	67F-4380R-01, -00 67F-43811-00 61A-43821-00, -01, -09

F75B/T (2005)
F80A/B/T (1999-18)
F100A/C/D (1999-18)
F200, F225, F250 (2002-12)
Z200, Z300 (2003-12)
250G (2006-10)
F300 (2011-12)



new

REF	OEM
REC48630-92J00	6EK-4380R-00 64E-43821-05 63P-43811-20, -10 64E-43811-02 61A-43811-00 6AW-4380R-01



new

REF	OEM
REC64E-43821-05	64E-43821-00 64E-43821-05 64E4382100 64E4382105

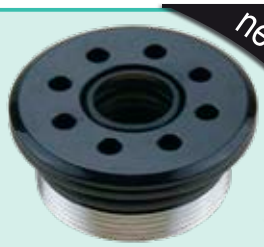

new

REF	OEM
REC48630-96J03	64E-43821-08, 09, 00 64E-43820-08, 09, 00 6AW-4380R-00

100 - 300 HP
F300, F350 (V8) (2008-12)



EXTRACTOR TAPONES DE TRIM | TRIM PLUGS EXTRACTOR | ESTRATTORE PER TAPPI DI TRIM | KIT EXTRACTEUR

new

REF	
RECTOOLTRIMKIT	RECTOOLTRIM1 + RECTOOLTRIM2 + RECTOOLTRIM 3



REF					A
RECTOOLTRIM1	1/2"	+ RECPIN4	+ RECPIN4.5		38 mm
RECTOOLTRIM2	1/2"	+ RECPIN4	+ RECPIN4.5		32 mm
RECTOOLTRIM3	1/2"	+ RECPIN6			35 mm

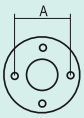

TRIM PISTON	TILT PISTON	
RECTOOLTRIM1		F25 - F40
RECTOOLTRIM2	RECTOOLTRIM3	F115 (2000-14)
RECTOOLTRIM2	RECTOOLTRIM3	F150 (2004-10)
RECTOOLTRIM2	RECTOOLTRIM1	F150 (2011+)
RECTOOLTRIM2	RECTOOLTRIM3	F175 - F200 (2.8L)
RECTOOLTRIM1	RECTOOLTRIM1	F200 - F250 (3.3L)
RECTOOLTRIM1	RECTOOLTRIM1	F225 - F300 (4.2L)
RECTOOLTRIM2	RECTOOLTRIM3	F350
RECTOOLTRIM2		F425
RECTOOLTRIM2		55-90 (2-Strokes) (1994+)
RECTOOLTRIM2	RECTOOLTRIM3	115-200 + VMAX
RECTOOLTRIM1	RECTOOLTRIM1	225 (2-Strokes)



KITS DE RECAMBIO
Los pines de repuesto no tienen garantía.

SPARE KITS
Replacement pins are not guaranteed.

KIT DI RICAMBIO
I perni di ricambio non sono garantiti.

KIT DE RECHANGE
Les pins de remplacement ne sont pas garanties

REF	
RECPIN4	3 PIN x 4 mm
RECPIN4.5	3 PIN x 4.5 mm
RECPIN6	3 PIN x 6 mm



SISTEMA DE GOBIERNO
STEERING SYSTEM
SISTEMA DI GUIDA
SYSTÈME DE DIRECTION

MANDOS DE CONTROL | ENGINE CONTROLS | COMANDI DI CONTROLLO | BOITIER DE COMMANDE

MANDO LATERAL (703) PUSH TO OPEN | SIDE CONTROL (703) PUSH TO OPEN | COMANDO LATERALE (703) PUSH TO OPEN | BOITIER LATERAL (703) PUSH TO OPEN

Conector de 7 pins. Sin PowerTrim
Para motores fueraborda Yamaha de 9,9 Electric a 30 Hp. Leva para aceleración en punto muerto. Utiliza cables 33-C

Connector 7 pins. Without PowerTrim
For outboard engines Yamaha 9,9 Electric to 30 Hp. Lever for neutral engine warm-up. For 33-C cables

Conettore da 7 pins. Sin PowerTrim
Per motori fuoribordo Yamaha da 9,9 Electric a 30 Hp. Leva per accellerare in un punto morto. Utilizza cavi 33-C.

Connecteur 7 broches. Sans Trim. Pour moteur hors-bord Yamaha de 9.9 éléctrique à 30cv. Utilise des câbles 33C.

REF	OEM		2T STROKES	4T STROKES
REC703-48230-14 PAF15-13000000W	703-48230-10 703-48230-11 703-48230-12 703-48230-13 703-48230-14 703-48230-15 703-48230-16 703-48230-17 703-48230-18 703-48230-1A 703-48230-20 703-48230-21	9.9 - 70 HP (1986+)	✔	✔



RECmar®

Conector de 10 pins. Con PowerTrim
Para motores fueraborda Yamaha de 40 a 250 Hp. Leva para aceleración en punto muerto. Con interruptor y cableado de Power Trim. Utiliza cables 33-C

Connector 10 pins. With PowerTrim
Dual function, single lever control, For outboard Yamaha 40 to 250 Hp. With power trim switch and wires. For 33-C cables.

Conettore da 10 pins. Con PowerTrim
Per motori fuoribordo Yamaha da 40 a 250 Hp. Leva per accellerare in un punto morto. Con interruttore e cablaggio di Power Trim. Utilizza cavi 33-C.

Connecteur 10 broches. Avec Trim interrupteur et faisceau. Boitier pour moteur hors-bord Yamaha de 40 à 250cv. Levier pour se mettre au point mort. Utilise des câbles 33C.

REF	OEM		2T STROKES	4T STROKES
REC703-48205-16 PAT85-08010000W	703-48205-10 703-48205-11 703-48205-12 703-48205-13 703-48205-14 703-48205-15 703-48205-16 703-48205-17 703-48205-18 703-48205-1A 703-48205-1B 703-48205-20 703-48205-21	8 - 300 HP (1984+)	✔	✔



RECmar®


P. 129

MANDO LATERAL PULL TO OPEN | SIDE CONTROL PULL TO OPEN | COMANDO LATERALE PULL TO OPEN | BOITIER LATERAL PULL TO OPEN

new

REF
PAF40-13000000EI



PUSH TO OPEN

new

REF	OEM
PAF15-13000500W	703-48261-01



PULL TO OPEN

new

REF	OEM
PAT20-13000500W	703-48861-11



MANDO LATERAL / SIDE CONTROL / COMANDO LATERALE / BOITIER LATERAL

Mando a distancia de palanca con doble función (acelerador y cambio). Para motores intraborda e intra-fueraborda. Montaje lateral superpuesto. Utiliza cables 33-C.

Dual function, single lever control, For virtually all stern drive, outboard and inboard engines. Push button for neutral engine warm-up. For 33-C cables.

Comando a distanza di leve con doppia funzione accelleratore e cambio. Per motori entrobordo e entro-fuoribordo. Montaggio laterale sovrapposto. Utilizza cavi 33-C.

Boitier mono levier bi-fonction accélérateur et inverseur pour moteur inboard et hors-bord. Bouton poussoir pour se mettre au point mort. Utilise des câbles 33C.

REF	OEM
GS40015	YMD-RCBOX-00-10

GOLDENSHIP



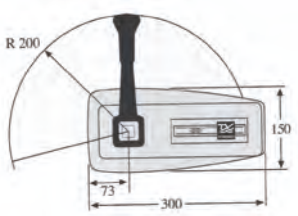

MANDO PARA CONSOLA / CONSOLE CONTROL / COMANDO PER CONSOLLA / BOITIER POUR CONSOLE

new

REF	YAMAHA 704	TRIM
REC704-48205-R0	704-48205-R0 704-48205-P1 704-48205-B1 704-48205-B0 704-48205-R0 704-48205-14 704-48205-11 704-48205-12 704-48205-13 704-48205-15 704-48205-P0	✔

RECmar®



REF	YAMAHA 704	TRIM
REC704-48207-R0	704-48207-R0 704-48207-P1 704-48207-39 704-48207-31 704-48207-30 704-48207-20 704-48207-21 704-48207-22	✔

RECmar®



CONECTORES DE CABLES / CABLE CONNECTOR / CAVO CONNETTORE / EMBOUT DE CABLE

REF	OEM
REC663-48344-00	663-48344-00

6>115HP



REF	OEM
PAF25-07000007W	703-48345-01

6>115HP



INTERRUPTORES PARA MANDOS / SWITCHS FOR ENGINE CONTROLS / INTERRUTTORI PER CONTROLLO / INTERRUPTEUR DE CONTRÔLE

INTERRUPTOR POWER TRIM (703) / POWER TRIM SWITCH (703) / INTERRUTTORE POWER TRIM (703) / COMMUTATEUR DE TRIM (703)

REF	OEM
PAE4-10040100W	703-82563-00 703-82563-01 703-82563-02

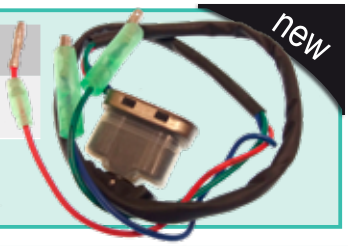

REF	OEM
REC703-82563-21	703-82563-21 703-82563-20



ZUMBADOR ACÚSTICO (703) / BUZZER ASS'Y (703) / CICALINO (703) / AVERTISSEUR SONORE (703)

REF	OEM
PAF15-13000300W	703-83383-00 703-83383-01 703-83383-02 703-83383-10 703-83383-11



INTERRUPTOR PANEL SIMPLE (704) / SWITCH (704) / INTERRUTTORE PANELLO SIMPLE (704) / TABLEAU DE COMMANDE SIMPLE (704)

REF	OEM
REC704-82570-12	704-82570-12 704-82570-11 704-82570-10 704-82570-08 6E5-82570-05

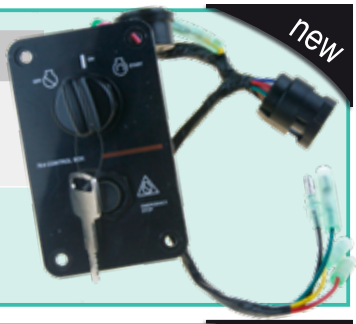

REF	OEM
REC704-82563-J2	704-82563-J2 704-82563-J1 704-82563-J0

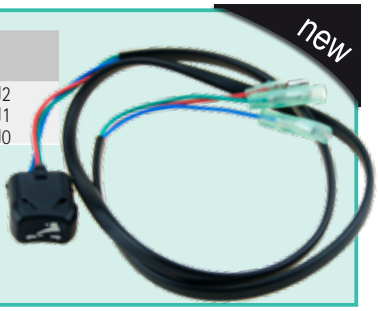

REF	OEM
REC704-82563-42	704-82563-42 704-82563-41 704-82563-40



INTERRUPTOR PANEL COMPLETO O DOBLE ESTACIÓN / PANEL TWIN STATION / PANNELLO DOPPIA STAZIONE / BOITIER DE DEMARRAGE 2 MOTEURS

REF	OEM
REC6K1-82570-13	6K1-82570-13 6K1-82570-12 6K1-82570-11 6K1-82570-10 6K1-82570-08 6K1-82570-07 6K1-82570-06 6K1-82570-05 6K1-82570-04 6K1-82570-03 6K1-82570-02 6K1-82570-00

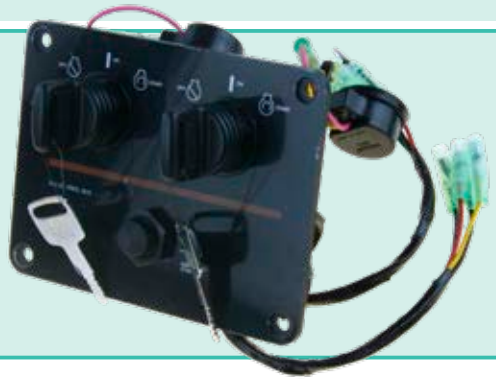

ARNÉS | ARNES | CAVI | FAISCEAU ELECTRIQUE

EXTENSIÓN DE ARNÉS (703/704) | ARNES EXTENSION (703/704) | ESTENSIONE (703/704) | RALLONGE FAISCEAU (703/704)

REF	OEM		PINS
REC688-8258A	688-8258A-10	2 m	10
REC688-8258A-30	688-8258A-30	3 m	10



new

ARNÉS COMPLETO (703) | ARNES ASSY (703) | CAVO CONTROLLO COMPLETO (703) | FAISCEAU ELECTRIQUE BOITIER CDE (703)

REF	OEM		PIN
PAF15-13000100W	688-82586-21	5 m	7
PAT85-08010100	688-8258A-20	5 m	10



PAF15-13000100W



PAT85-0801010

new

COMPONENTES (703) | COMPONENTS (703) | COMPONENTI (703) | COMPOSANT (703)

ESPACIADOR | PLATE CONTROL BOX | DISTANZIALE | PLAQUE BOITIER DE COMMANDE

REF	OEM
PAF15-11000002W	703-48293-10



new

PALANCA ACELERADOR | THROTTLE HANDLE INCHING | LEVA ACCELLERATORE | POIGNEE DE PAPILLON

REF	OEM
PAF15-13020007W	703-48152-00



new

PLACA CERRADURA SELECTOR | BLOCK CONTROL HANDLE | PLACCA SERRATURA SELETTORE | CALE POIGNEE DE CONTRÔLE

REF	OEM
PAF15-13010010W	703-48245-00



new

RUEDA ACELERACION | LEVER THROTTLE | RUOTA ACCELERAZIONE | ROUE D'ACCELERATEUR

REF	OEM
REC663-42138-00	663-42138-00

55B/BET
E55
E60
75A5
85AE



CABLE DE ACELERADOR — THROTTLE CABLE — CAVO ACCELERATORE — CÂBLE D'ACCELERATEUR

REF	OEM
REC6E0-26301-01	6E0-26301-01

4AC/A/AS
5C/CS/CMH



REF	OEM
REC6B4-26301-00	6B4-26301-00

E15D
E9.9D



REF	OEM
REC677-26301-02	677-26301-02

E8D
E8DMH



REF	OEM
REC61N-26311-00	61N-26311-00

25B/BM/V
30G/E30H



REF	OEM
REC6L2-26301-00	6L2-26301-00

9.9F/FM
13.5AM
15F/FM
20D/M
25N/NE/NW/D/M



REF	OEM
REC6F5-26311-00	6F5-26311-00

E40G/J
40G/J

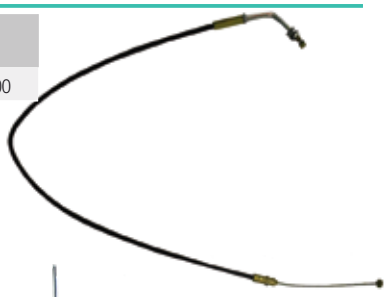

REF	OEM
REC66T-26301-00	66T-26301-00

40X/E40X



new

REF	OEM
REC692-26301-03	692-26301-00, 01,02,03

55B (1992-00)
75A (1992-00)
85A (1995-98)
E75B (2003-16)
E48C (2003)
E60H (2001+)
E55C (2003-16)
F40J (2016+)

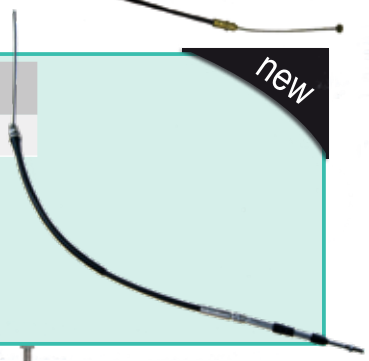

CABLES DE CONTROL — CONTROL CABLES — CAVI COMANDO — CÂBLES DE COMMANDE

Recorrido trabajo: 76 mm. Rosca 10-32"
Travel 3" Threaded 10-32"
Estensione 76 mm Filetto 10-32"
Course: 76 mm. Fil 10-32

maxflex

PRETECH Cable and Controls





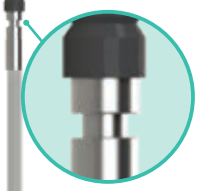

REF	RO	
PRE3300C05	YMM-21005-00-00	5' / 1,50 m
PRE3300C06	YMM-21006-C8-00	6' / 1,80 m
PRE3300C07	YMM-21007-C8-00	7' / 2,10 m
PRE3300C08	YMM-21008-C8-00	8' / 2,45 m
PRE3300C09	YMM-21009-C8-00	9' / 2,75 m
PRE3300C10	YMM-21010-C8-00	10' / 3,05 m
PRE3300C11	YMM-21011-C8-00	11' / 3,35 m
PRE3300C12	YMM-21012-C8-00	12' / 3,65 m
PRE3300C13	YMM-21013-C8-00	13' / 3,95 m
PRE3300C14	YMM-21014-C8-00	14' / 4,25 m
PRE3300C15	YMM-21015-C8-00	15' / 4,60 m
PRE3300C16	YMM-21016-C8-00	16' / 4,90 m
PRE3300C17	YMM-21017-C8-00	17' / 5,20 m
PRE3300C18	YMM-21018-C8-00	18' / 5,50 m
PRE3300C19	YMM-21019-C8-00	19' / 5,80 m
PRE3300C20	YMM-21020-C8-00	20' / 6,10 m
PRE3300C21	YMM-21021-C8-00	21' / 6,40 m
PRE3300C22	YMM-21022-C8-00	22' / 6,70 m
PRE3300C23	YMM-21023-C8-00	23' / 7,00 m
PRE3300C24	YMM-21024-C8-00	24' / 7,30 m
PRE3300C25	YMM-21025-C8-00	25' / 7,60 m
PRE3300C26	YMM-21026-C8-00	26' / 7,90 m
PRE3300C27	YMM-21027-C8-00	27' / 8,25 m
PRE3300C28	YMM-21028-C8-00	28' / 8,55 m
PRE3300C29	YMM-21029-C8-00	29' / 8,85 m
PRE3300C30	YMM-21030-C8-00	30' / 9,15 m

VARILLA DE ENLACE — LINK ROD ASSY — LEVA COLLEGAMENTO — BARRE D'ACCOUPLEMENT COMPLETE

REF	OEM
PAF25-07000300W	65W-61350-00

F20A
F25A
FT25B
F30A
F40B/C/D
F50F/H
F60A/C/F

FT50G/J
FT60B/D/G
F70A/40X



REF	OEM
PAF20-07000100W	63AH-61350-00

F15C
F20B



REF	OEM
GS41084	6E5-61301-00 6E5-61301-01

GOLDENSHIP



REF	OEM
PAF15-11020000W	63V-61350-00

9.9F
15F
F9.9C
FT9.9D
F15A



MANETA ACELERADOR — LEVER, THROTTLE — LEVA COLLEGAMENTO — LEVIER DE COMMANDE

new

REF	OEM
PAF4-01090100	6G1-42138-00,01 6EG-G2138-00



new

REF	OEM
PAF15-01030100	65W-42138-00



BRACKET

BRACKET ESTRIBOR — RIGHT BRACKET ASSY — BRACKET TRIBORDO — ETRIER DROIT

new

REF	OEM	2T STROKES	4T STROKES
PAF15-01010200	63V-43112-00-4D 63V-43112-01-4D 63V-W4311-00-4D 63V-W4311-03-4D 63V-WS431-B6-8D	✔	✔

9.9
13.5
15



BRACKET BABOR — LEFT BRACKET ASSY — BRACKET BABORDO — ETRIER GAUCHE

new

REF	OEM	2T STROKES	4T STROKES
PAF15-01010100	63V-43111-00-4D 63V-43111-01-4D 63V-43111-A2-4D	✔	✔

9.9
13.5
15



SOPORTE GIRATORIO — BRACKET, ROTARY — SUPPORTO GIRATORIO — SUPPORT TOURNANT

new

REF	OEM	2T STROKES	4T STROKES
PAF15-01010301S	63V-43311-00-4D 63V-43311-01-4D 99999-03116	✔	✔

9.9
13.5
15



SOPORTE BARRA DE DIRECCIÓN | BOLT, CLAMP BRACKET | SUPPORTO BARRA DIREZIONE | TUBE SUPPORT CABLE DE DIRECTION

new

REF	OEM	2T STROKES	4T STROKES
PAF15-01010001	63V-43131-00 63V-43131-10 63v-43131-01	✔	✔

9.9 - 60 Hp



TUERCA AUTOBLOCANTE | NUT, SELF-LOCKING | BULLONE AUTOBLOCCANTE | ECROU AUTO VERROUILLABLE

REF	OEM
PAF15-01010007	63V-43145-00 90185-22043 90185-22M11



RETÉN INFERIOR DEL BRACKET | BRACKET OIL SEAL | ANELLO BRACCETTO | JOINT INFERIEUR DU SUPPORT

new

REF	OEM	2T STROKES	4T STROKES
REC93109-44M00	93109-44M00		✔

40 HP



SOPORTE INFERIOR | SHELL, MOUNT DAMPER | SUPPORTO INFERIORE | SUPPORT SILENT BLOCK

new

REF	OEM
PAF15-00000001	66M-44551-00-4D 63V-45551-00-4D

9.9
13.5
15



VARILLA DE BASCULACIÓN | TILT ROD | ASTA BASCULANTE | BARRE DE TILT

new

REF	OEM
REC676-43160-02	676-43160-00 676-43160-01 676-43160-02

40 - 55 HP



REF	OEM
REC688-43160-01	688-43160-01

40 - 90 HP



CIRCLIP | CIRCLIP | CIRCLIP | CIRCLIP

new

REF	OEM
PAGB/T896-9	93430-10M00 99080-10600

6L5



EJE CONECTOR ACELERADOR | THROTTLE SHAFT CONNECTOR | ASSE CONNETTORE ACCELLERATORE | TIGE DE CONNEXION ACCELERATEUR

new

REF	OEM
REC688-41211-01	688-41211-00 688-41211-01



CONECTOR — CONNECTOR — CONNETTORE — CONNECTEUR

new

REF	OEM
REC682-41237-00	682-42137-00
REC682-41237-50	682-41237-50
REC663-85518-00	633-85518-00


REC682-41237-00


REC682-41237-50


REC663-85518-00

ENGRASADOR INOX 316 M6 — OILER M6 — INGRASSATORE — GRAISSEUR M6 INOX 316

new

REF	OEM
PAJB/T9740.1-M6	93700-06M03



BUJES — BUSHINGS — BOCCOLE — BAGUES

REF	OEM
PAF15-01010302	90386-22M15
REC90386-25M31	90386-25M31
PAF15-01000004	90386-30048
PAF25-01000004	90386-44M03
PAF25-01000001	90386-52M02
REC90386-30M77	90386-30M77


PAF15-01010302


REC90386-25M31


PAF15-01000004


PAF25-01000004


PAF25-01000001


REC90386-30M77

new

REF	OEM	
REC90386-22M13	90386-22M13	NYLON
PAT85-01010203	90386-10M16	NYLON
PAF25-01010002	90386-22M15	NYLON
PAT85-01020005	90386-30M77	NYLON
PAT85-00000017	90386-18M35	NYLON
REC90386-18M63	90386-18M63	NYLON
REC90386-22M98	90386-22M98	NYLON
REC90381-20001	90381-20001	NYLON
REC90386-38M89	90386-38M89	NYLON
PAF15-01000001	65F-42537-00	NYLON
PAF25-03000007	90387-06M69	METAL


REC90386-22M13


PAT85-01010203


PAF25-01010002


PAT85-01020005


REC90386-18M63


REC90386-22M98


REC90381-20001


REC90386-38M89


PAT85-00000017


PAF15-01000001


PAF25-03000007

COLLAR | WASHER, BELOW | COLLARE | CALLE

new

REF	OEM
PAF15-01000006	90386-30M60
PAT85-01020003	90386-30M78



PAF15-01000006



PAT85-01020003

MANDO ACELERADOR | STEERING HANDLE ASSY | MANIGLIA | POIGNEE DE DIRECTION

REF	OEM
PAF4-01090300	68D-G2177-10 6EE-G2177-00



F4-F8

REF	OEM
REC6N0-G2177-00	6N0-G2177-00



F2.5
6C/T/M/D
8C/T/M

EJE DE CAMBIO | HANDLE GEAR SHIFT ASSY | LEVERAGGIO | COMMANDE D'INVERSION

REF	OEM
REC688-44120-12	688-44120-11 688-44120-12

75AE/A
E75B
85A/AE



REF	OEM
REC688-44120-22	688-44120-22

85AE



REF	OEM
REC692-44120-22	692-44120-21 692-44120-22

75AE
80A
90A
90ETN



MANETAS Y FIJACIONES | STARTER HANDLE AND FIXINGS | MANIGLIE E CHIUSURE | POIGNEE LANCEUR ET DE SERRAGE

REF	OEM
REC6L8-G3118-01	6L8-G3118-01

F4/F6/F-FT8/F6
6C/TRV/M/D
8C/M



REF	OEM
REC99999-02808	99999-02808



REF	OEM
REC6E0-43118-01	6E0-43118-00 6E0-43118-01



REF	OEM
REC663-43118-01-4D	663-43118-01-4D

F20/F25
40X/E40M/E40X/40Q
E8D/55B
E60H/E
E55C
E9.9D/E15D



REF	OEM
REC648-44146-00	648-44146-00

25Q/D
30A
20C
40Q/H/E40G/J
50D



REF	OEM
REC689-15755-00	689-15755-00

9.9D/15D
25NE/20DM



REF	OEM
REC650-44147-00	650-44147-00

40Q
E40G/J
40G/J



REF	OEM
REC63V-44514-01-CA	63V-44514-01-CA

9.9F/FM/MS
13.5AMH
15F/FM/MS



REF	OEM
REC66T-44514-00-4D	66T-44514-00-4D

40X
E40X/M



REF	OEM
REC670-44514-00	670-44514-00

55B
E55CMH



new

REF	OEM
PAF15-00000002	682-44555-30

6 HP
8 HP
9.9 HP
15 HP



REF	OEM
REC670-44555-00-94	62Y-44555-00

E48CM
E55CM



new

REF	OEM
PAF15-00000003	66M-44557-00

9.9 HP
13.5 HP
15 HP



REF	OEM
REC679-44514-00-94	679-44514-00-94

40QE/QWC/G/J
E40G/J



new

REF	OEM
PAF15-02010000	66M-44514-00-4D

9.9 HP
13.5 HP
15 HP



REF	OEM
REC682-44514-01-94	682-44514-01-94

E9.9DMH
E15DMH





REF	OEM
REC663-44551-02-8D	663-44551-02-8D

F50DETL
75CETO
90AETO/TR/TRH



REF	OEM
REC688-44514-00	688-44514-00

E60HMHD
70BETO
75CETO
90AETO



REF	OEM
REC676-44518-00	676-44518-00

E40G/J
40G/J
40G





REF	OEM
REC688-44555-00	688-44555-00

60FE/FET
70CE/ETN
E75B
80A
85A



SISTEMA DE REFRIGERACIÓN
COOLING SYSTEM
SISTEMA DI RAFFREDDAMENTO
SYSTÈME DE REFROIDISSEMENT

LÍQUIDO INHIBIDOR DE LA CORROSIÓN

Diseñado especialmente para eliminar sedimentos de sal de cualquier superficie pintada, de metal, fibra de vidrio, vinilo, caucho, cristal o plástico. Es el método más eficaza para proteger los motores, los aparejos de pesca... Genera una capa de polímeros que evita futuras sedimentaciones.

SALT OFF

It is specifically formulated to quickly and effectively remove salt deposits from metal, fiberglass, plastic or painted surfaces.
It contains special polymers that bond to the treated surface to help prevent the formation of future deposits.

LIQUIDO INIBITORE DELLA CORROSIONE

Appositamente progettato per rimuovere depositi di sale da qualsiasi superficie verniciata, metallo, fibra di vetro, vinile, gomma, vetro o plastica. È il metodo più efficace per proteggere motori, attrezzi da pesca ... Genera uno strato di polimeri che impedisce la futura sedimentazione.

SALT OFF

La protection SALT OFF est formulé pour éliminer les dépôts de sel sur toutes les surfaces marines. Utilisable pour le rinçage des moteurs hors bord et inboard et les embases. Il laisse un film de protection spécial pour prévenir des attaques futures du sel.

new



REF
STA94100



REF	
STA93900	3,78 L
STA93922	650 ml
STA93932	1 L



STA93900



STA93932



STA93922

TERMOSTATO THERMOSTAT TERMOSTATO THERMOSTAT

TERMOSTATO THERMOSTAT TERMOSTATO THERMOSTAT

new

REF	OEM	°C
REC6DA-12411-01	6DA-12411-01	60°



new

REF	OEM	°C
REC6FM-12411-00	6FM-12411-00	60°



REF	OEM	°C
REC6AH-12411-00	69M-12411-01 69M-12411-00 6AH-12411-00	60°



REF	OEM	°C
REC6E5-12411-02	6E5-12411-00 6E5-12411-01 6E5-12411-02	50



REF	OEM	ºC
REC6D9-12411-00	6D9-12411-00	55º



REF	OEM	ºC
REC6E5-12411-30	6E5-12411-30 6E5-12411-20 6E5-12411-10	50º



REF	OEM	ºC
REC6CE-12411-00	6CE-12411-00	52º



REF	OEM	ºC
PAF15-07000031	66M-12411-00 66M-12411-01	60º



REF	OEM	ºC
REC6AW-12411-00	6AW-12411-00	60º



REF	OEM	ºC
REC6H3-12411-10	6H3-12411-00 6H3-12411-01 6H3-12411-10 6H3-12411-11	60º



REF	OEM	ºC
REC6FP-12411-00	6FP-12411-00	60º



REF	OEM	ºC
REC67F-12411-01	67F-12411-00 67F-12411-01	60º



REF	OEM	ºC
REC6F5-12411-03	6F5-12411-00 6F5-12411-01 6F5-12411-02 6F5-12411-03	60º



REF	OEM	ºC
REC60V-12411-00	60V-12411-00	50º



GUÍA TERMOSTATO — THERMOSTAT GUIDE — GUIDA TERMOSTATO — GUIDE DES THERMOSTATS

	REF
3A/ 4A/ 5C/ 6C/ 8C/ 25N (-1993)/ 25NWO	REC6E5-12411-02
9.9F/ 15F/ 25N(1994+)/30D/ 40V/ 75C/ 90A/ 100A/ 115C/ 130B/ 150F/ 175D/ 200F/G/ 225D/G/ 250A/B/ Z150P/Q/ Z175G/ Z200N/P	REC6E5-12411-30
F2.5A/ F9.9H/ F13,5B/ F15C/ F20B,M	REC6AH-12411-00
9.9D/ 15D/ 20C/ 25D/ 40Q/ 55B	REC6F5-12411-03
F15C/F20D	REC6AH-12411-00
F25G	REC6FM-12411-00
50G/ 60F/ 70B	REC6H3-12411-10
F4A/B/ F5A/ F6A/C/ F8B/C/ FT8D/ F9.9B/C/F/J/ FT9.9A/D/G/L/ F15A/ F25A/D/ FT25B/F/ F30A/B/ F40A/B/F/ F50A/F/H/ FT-50B/C/G/J/ F60A/C/F/ FT60B/D/G/ F70A/ F80A/ F100A(2000-)	PAF15-07000031

	REF
F80A/B/ F100A(01+)/ F100B/ F(L)150A/ F(L)200A/C/ F(L)225A/B/C/ F(L)250A/B	REC67F-12411-01
F100D	REC6D9-12411-00
F100F	REC6FP-12411-00
F(L)225F/ F(L)250D/ F(L)300B	REC6CE-12411-00
F(L)200F/ F(L)200G/ F175A	REC6DA-12411-01
F(L)300A/ F(L)350A	REC6AW-12411-00
F100B/ F(L)115A/ (L)Z250D/F/ Z300A	REC60V-12411-00

JUNTAS TERMOSTATO — THERMOSTATO GASKETS — GUARNIZIONI TERMOSTATO — JOINTS DE THERMOSTAT

new

REF	OEM
REC63P-12414-00	63P-12414-00

F150A/B/D/F/T (2004+)

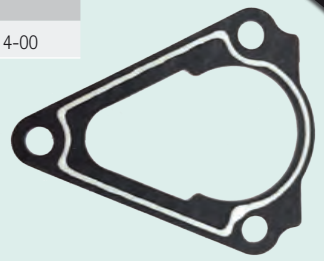

new

REF	OEM
PAF20-05000702	6AH-12414-00

F9.9 -F20 (New models)

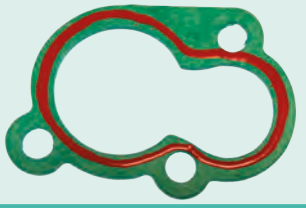

REF	OEM
PAF4-04000011	68D-E2414-A0

F2.5
F4
F5
F6



REF	OEM
REC655-12414-A1	655-12414-A1

20C/CM
E25A
E25BMH
25VE/VM/DE/D/B/BMH/BWH/HMH
30G/GE/A
E30HMH
30HMH/HWH/HWL



REF	OEM
REC6G8-12414-A0	6G8-12414-A0

T8/T9.9
F6/8/9.9
FT8/9.9



REF	OEM
REC676-12414-A0	676-12414-A1

40X/E40X/E40MLH

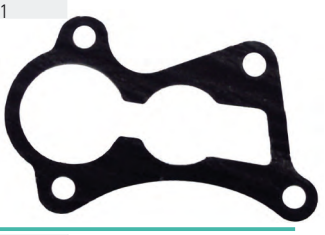

REF	OEM
PAF15-07010022	62Y-12414-00
REC6H3-12414-A1	6H3-12414-A1

F9.9
F60
F30
F13.5
F70
FT9.9
T9.9TLR
FT25
FT50
FT60
F15/20/25/40/45/50
T50TLR
T60TLR
T25TLR



REF	OEM
REC6E9-12414-A1	6E9-12414-A1

40QE/QM/QEZ/QWC/GWH/JWH
E40GMH/JMH



REF	OEM
REC682-12414-A1	682-12414-A1

9.9D/F/FMH/FEMH/MH/MSH
15D
E9.9DMH
13.5AMH
15F/FEMH/FMH/MSH/MH
E15DMH



REF	OEM
REC663-12414-00	663-12414-A0

E48CMHS
55B/BET/BE/BM
E55CMH



REF	OEM
REC61A-12414-A0	61A-12414-A0

20DM/MSH
25J/JETO/NEM/NWC/D/DM
30D/DMH
40V/VMH/VEO
C40MLH/T
50H/HM
225C/CET/FETO/G
250AET/B/TXR/G/GETO



REF	OEM
REC688-12414-A1	688-12414-A1

75CETO/AE
E75B
80AE/A
85AE/A
90AE/TLR
100A/TLR
115BE/B
115A/AETO/CET
130BETO/TLR
150F/TXRA/FETO/C
Z150
175D/DETO/DETO
Z175
225D/DETO
VZ200
Z200
200AET/CETO/F/
FETO/G/GETO



CUBIERTAS TERMOSTATO | THERMOSTATO COVER | COPERCHIO TERMOSTATO | COUVERCLE DE THERMOSTAT

new

REF	OEM	
REC6E9-12413-00-1S	6E9-12413-00-1S	REC6E9-12414-A1

E40/40J (2003+)



new

REF	OEM	
REC688-12413-00-1S	688-12413-00-1S	REC688-12414-A1



new

REF	OEM	
REC682-12413-00-1S	682-12413-00-1S 682-12413-00-9M	REC682-12414-A1

E40/40J (2003+)



VÁLVULA ANTIPRESIÓN DE TERMOSTATO | THERMOTAT, PRESSURE VALVE | VALVOLA ANTI-PRESSIONE DE TERMOSTATO | SOUPAPE DE PRESSION DE THERMOSTAT

new





REF	OEM	O-RING	OEM
REC688-12416-00	688-12416-00	REC90480-20M05	90480-20M05

RESORTE | SPRING | MOLLA | RESSORT

new

REF	OEM
REC90501-16M11	90501-16M11

75 / 85 / 90A

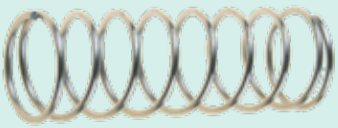

NIPLE | NIPPLE | NIPLE | TETINE

new

REF	OEM
PAF15-05000009	6H3-44391-00 6H3-44391-01 6BL-44391-00



JUNTAS TAPA DE REFRIGERACIÓN — GASKET, EXHAUST INNER COVER

REF	OEM
REC6E0-41114-A1	6E0-41114-A1

4AC/AS/MSH
5C/CS

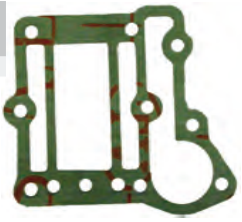

REF	OEM
REC6E0-41112-A1	6E0-41112-A1

4AC/AS/MSH
5C/CS

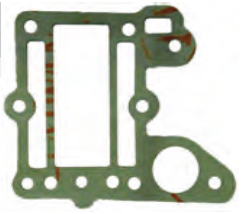

REF	OEM
REC6G1-41112-A1	6G1-41112-A1

6C/T/M/D
8C/M/T

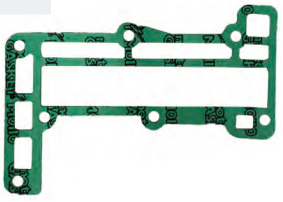

REF	OEM
REC6G1-41114-A0	6G1-41114-A0

6C/T/M/D
8C/M/T

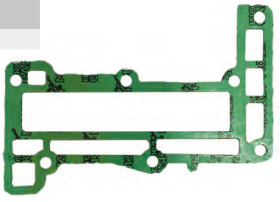

REF	OEM
REC6G1-11193-A1	6G1-11193-A1

6C/M/T/D
8C/M/T

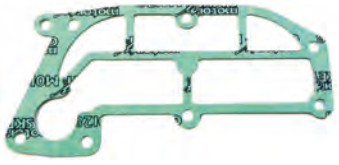

REF	OEM
REC6G8-41112-02	6G8-41112-02

F8B
F9.9A/B
T9.9E



REF	OEM
REC6G8-41114-00	6G8-41114-00

F8B
F9.9A/B
T9.9E



GUARNIZIONE COPERCHIO REFRIGERAZIONE — JOINT DE PLAQUE DE REFROIDISSEMENT

REF	OEM
REC677-41112-A0	677-41114-A0

E8D/DMH



new

REF	OEM
REC6B4-11193-A0	6B4-11193-A0

E9.9 / E15 (2003+)

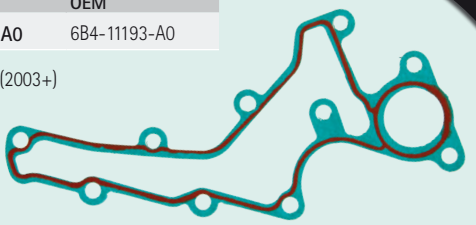

REF	OEM
REC682-41114-00	682-41114-A1

9.9D
15D

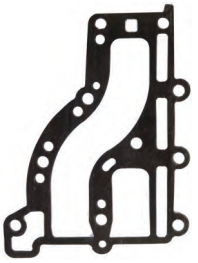

REF	OEM
REC682-41112-00	682-41112-A1

9.9D
15D

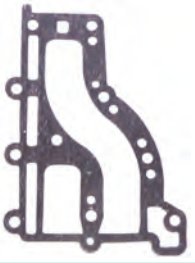

REF	OEM
PAF15-07010018	66M-41114-01

F9.9
13.5
F15



REF	OEM
REC63V-41112-A0	63V-41112-A0

9.9F/MSH/MH
13.5AW
15F/MSH/MH
E15DMH



REF	OEM
REC664-41114-A0	664-41114-A0

20C/25D

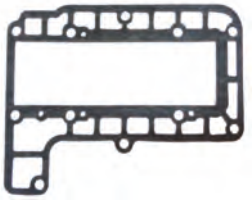

REF	OEM
REC6L2-41114-A1	6L2-41114-A1

20D/M
25N/M/D

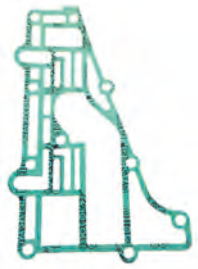

REF	OEM
REC6L2-41112-A3	6L2-41112-A2

20D/M
25N/M



REF	OEM
PAF25-05010111	65W-41114-00

F20/25
T25

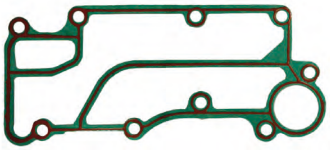

REF	OEM
REC6H3-41112-A0	6H3-41112-A0

25B
50G/GE
60FE/TLR
E60H
70B/BE/TR

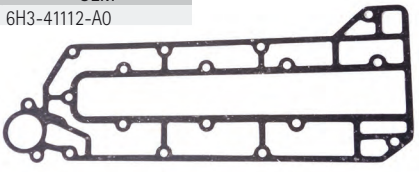

REF	OEM
REC6H3-41114-A0	6H3-41114-A0

25B
50G/GE
60FE/TLR
E60H
70B/BE/TR

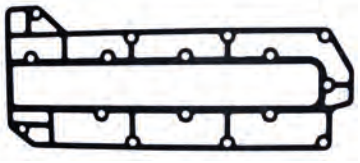

REF	OEM
REC6H4-41112-A0	6H4-41112-A0

25QEO
40H/V/VE/TLR
C40M/T
50H/DE

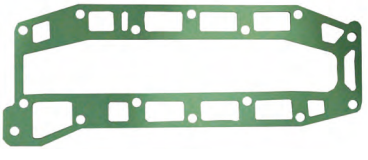

REF	OEM
REC6H4-41114-A0	6H4-41114-A0

25QEO
40H/V/VE/TLR
C40M/T
50H/DE

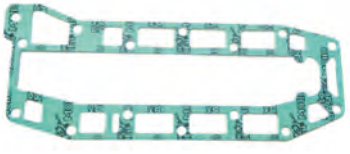

REF	OEM
REC6K8-41122-A1	6K8-41122-A1

25VE/M/B/BMH
E25A
30HM/HW/G/GE
E30HMH

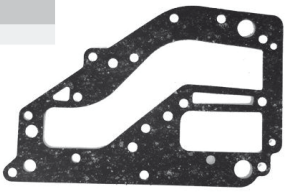

REF	OEM
REC6K8-41124-A1	6K8-41124-A1

25VE/M/B/BMH
E25A
30HM/HW/G/GE
E30HMH

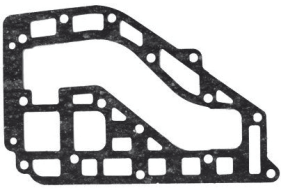

REF	OEM
REC689-41112-A0	689-41112-A0

30A

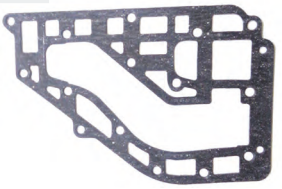

REF	OEM
REC689-41114-A0	689-41114-A0

30A

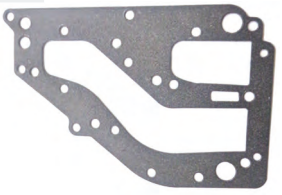

REF	OEM
REC67C-41114-00	67C-41114-00

F30/40



REF	OEM
REC66T-41114-A0	66T-41114-A0

40X
E40X

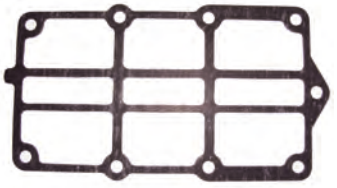

REF	OEM
REC6F5-41112-A0	6F5-41112-A0

40GWH/JMH
E40GMH

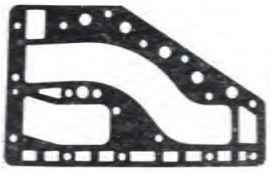

REF	OEM
REC6F5-41114-A0	6F5-41114-A0

40GWH/JMH
E40GMH

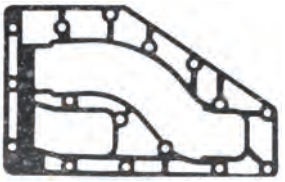

REF	OEM
REC6E5-41112-A1	6E5-41112-A1

100A/AET/TLR
115B/BE/TLR/CEO/TXR
130BET/TLR

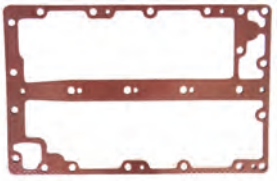

REF	OEM
REC6E9-41114-A0	6E9-41114-A0

40Q

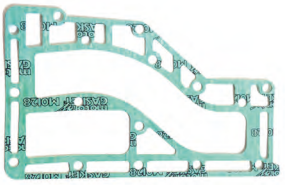

REF	OEM
REC6G5-11382-A1	6G5-11382-A1

115HP-250HP



REF	OEM
REC676-41112-A0	676-41112-A0

40Q

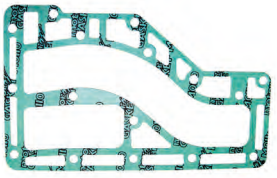

REF	OEM
REC6G5-41112-A1	6G5-41112-A1

150F/FE/TXR/GE/A-CE,
175D/DE/FE
200AET/F/FE/TLR/G/GE/BE
225D/DE/BE

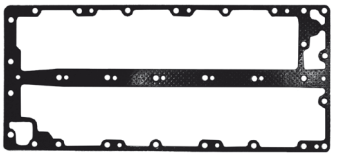

REF	OEM
REC663-41114-00	663-41114-A0

55B
E55CMH

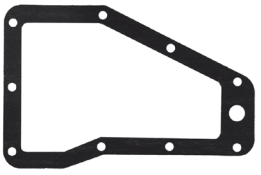

REF	OEM
REC68F-41114-00	68F-41114-00

Z150
175
200HP

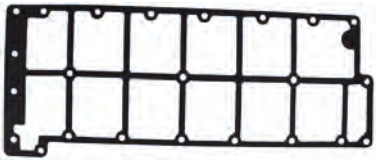

REF	OEM
REC688-41112-A0	688-41112-A0

75CET/TLR/AE
E75B
80AE
85A/AE
90A/AE/TLR

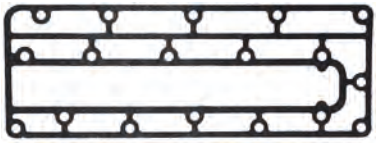

REF	OEM
REC6G5-41114-A0	6G5-41114-A0

150F/FE/TXR/GE/A-CE,
175D/DE/FE
200AET/F/FE/TLR/G/GE/BE
225D/DE/BE

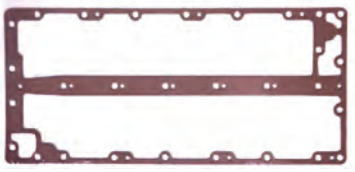

REF	OEM
REC688-41114-A0	688-41114-A0

75CET/TLR/AE
E75B
80AE
85A/AE
90A/AE/TLR

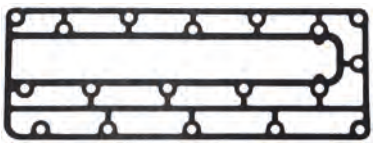

GUÍA DE IMPULSORES — IMPELLER GUIDE — GUIDA GIRANTE — GUIDE TURBINES

	REF	CEF	OEM	A	B	C
2A/B/C	REC646-44352-01	CEF500324	646-44352-01	11,5	47,5	13,7
F2.5, 3A, MALTA	REC6L5-44352-00	CEF500322	6L5-44352-00	10	36	14,5
4A/B, F4A, F4B, F5A, F6C, 5C	REC6E0-44352-00	CEF500325	6E0-44352-00	11	40	12,6
F6A/B, F8C, F9.9F, F9.9J	REC68T-44352-00	CEF500368	68T-44352-00	11,6	53	14
E8D	REC662-44352-01	CEF500321	662-44352-01	14	40	22
6C/D, 8C	REC6G1-44352-00	CEF500302	6G1-44352-00	11,9	40	18
F8, F9.9A/B/D, FT9.9A, 15D/9.9D	REC682-44352-01	CEF500320	682-44352-03	13	40	22
FT8D, 9.9F, F9.9C, FT9.9D, 15F, F15A-C, F20B, FT9.9G/L	REC63V-44352-01	CEF500363	63V-44352-01	12,85	53	14
20C, 25D, 30A	REC689-44352-02	CEF500326	689-44352-02	16,5	69,5	12,72
20D, 25N	REC6L2-44352-00	CEF500384	6L2-44352-00	13,97	51,2	19,05
F20A, F25A/D/G, FT25B, 25B/J/V, F30A, 30D/H/G, F40B/F, 40H/X, 50D	REC6H4-44352-02	CEF500385G	6H4-44352-02	16,1	51,2	19,05
F40A/C, 40V/F/Y, F45A, 50G/H, 55B, PRO50, F50A/B/F, FT50B/C/G, F50H, FT50J, F60A/C/F, FT60B/D/G, 60F, 70B, F70A	REC6H3-44352-00	CEF500316	6H3-44352-00	18,05	51,8	19
40Q	REC6F5-44352-00	CEF500352	6F5-44352-00	16,04	69,8	22,1
60F´04-, 70B´04-, 75A/C, PRO75, 80A, 85A, 90A	REC688-44352-03	CEF500323	688-44352-03	20,1	58	30
F80A/B, F100A/D	REC67F-44352-00	CEF500364	67F-44352-00	20	58,2	34,7
F(L)115A/F(L), 150A, V4/V6, F100F, F175, 200F/G	REC6E5-44352-01	CEF500371	6E5-44352-01	22,4	89	31
F(L)225F, F(L) 250D, F(L)300B	REC6CE-44352-00	CEF500401N	6CE-44352-00	22,5	90	36
F300, F350	REC6AW-44352-00	CEF500389N	6AW-44352-00	24,6	89	36

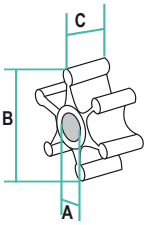


REC646-44352-01


REC6L5-44352-00


REC6E0-44352-00


REC68T-44352-00


REC662-44352-01


REC6G1-44352-00


REC682-44352-01


REC63V-44352-01


REC689-44352-02


REC6L2-44352-00


REC6H4-44352-02


REC6H3-44352-00


REC6F5-44352-00


REC688-44352-03


REC67F-44352-00


REC6E5-44352-01


REC6CE-44352-00


REC6AW-44352-00

KITS DE JUNTAS GASKETS KIT KIT GUARNIZIONE KITS JOINTS

REF	OEM
REC6A1-W0001-22	6A1-W0001-22

2B



REF	OEM
REC6A1-W0001-23	6A1-W0001-23

2B
2MSH



REF	OEM
REC6E0-W0001-C1	6E0-W0001-C1

F4/F5/F6
4AC
MSH
5C/CS/CMH



REF	OEM
REC6G1-W0001-C1	6G1-W0001-C0

6C/CMH/MSH/TRV/D/DMH
8C/MSH/CMH/TRV



REF	OEM
REC68T-W0001-20	68T-W0001-20

F6/F8/F9.9



REF	OEM
REC6G9-W0001-C4	6G9-W0001-C4

F8
F9.9



REF	OEM
REC69G-W0001-20	69G-W0001-20

FT8/T8
FT9.9/T9.9



REF	OEM
REC6G9-W0001-C6	6G9-W0001-C6

F8
F9.9



REF	OEM
REC66M-W0001-20	66M-W0001-20

F9.9
F13.5
F15

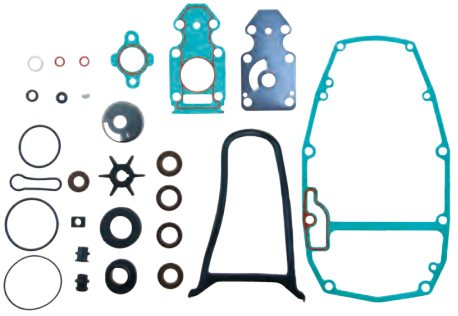

REF	OEM
REC683-W0001-21	683-W0001-C1

9.9D/15D



REF	OEM
REC63V-W0001-21	63V-W0001-21

9.9/15F
13.5AWH



RECAMBIOS MARINOS

REF	OEM
REC689-W0001-C2	6689-W0001-C2

20C/CM
25D
30A



REF	OEM
REC689-W0001-21	689-W0001-21

55B



REF	OEM
REC698-W0001-21	698-W0001-21

E48
E48CMH
55B/BM/BET
E55CMH

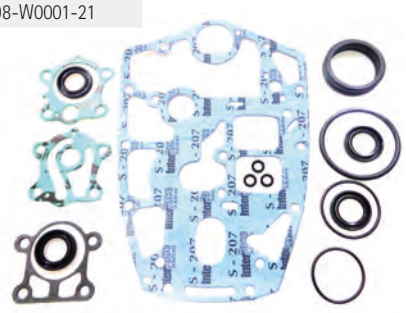

REF	OEM
REC689-W0001-20	689-W0001-20

55BET



REF	OEM
REC65W-W0001-20	65W-W0001-20

F20/25



REF	OEM
REC6L2-W0001-C3	6L2-W0001-C3

25D/NWC/MLH/MSH



REF	OEM
REC61N-W0001-E1	61N-W0001-E1

25V/VM/E25A
30G/GE

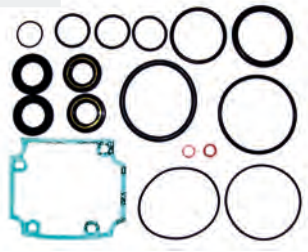

REF	OEM
REC6J8-W0001-21	6J8-W0001-21

25J
30D/DMH

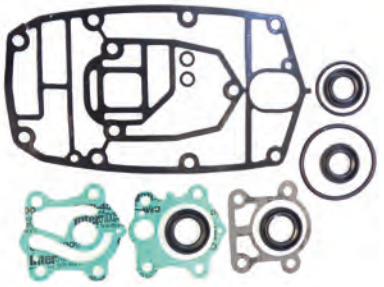

REF	OEM
REC6H3-W0001-22	6H3-W0001-22

25B/BETO
50G/GEO/GETO
60FETO/FEDO/FEO/F/TLR
70B/BETO/BEMO



REF	OEM
REC67F-W0001-20	67F-W0001-20

F100A/T
F80A/T



REF	OEM
REC62Y-W0001-22	62Y-W0001-20,-21,-22

F40A, ELH/F45AE, AET/F50A, AET, AED, AEDH, AEHT, TJR, TJRB, TLR, TLRA, TLRC, TLRZ, TLHC/FT50B/T50TLR (2000-07)



REF	OEM
REC64J-W0001-21	64J-W0001-21

FT50, T50



REF	OEM
REC6F5-W0001-C0	6F5-W0001-C0

40G/E40G



REF	OEM
REC69D-W0001-20	69D-W0001-20

E60H

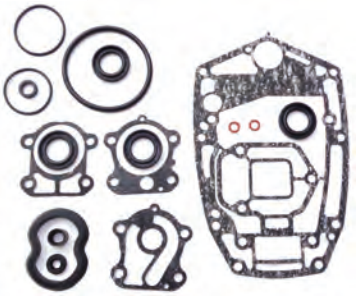

REF	OEM
REC66T-W0001-20	66T-W0001-20

40X/E40X-MH/XW
E40MCH



REF	OEM
REC6H2-W0001-20	6H2-W0001-20

60FETO/TR
70BETO/TR

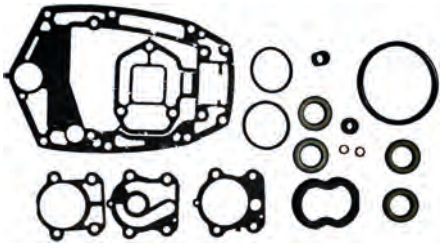

REF	OEM
REC6A0-W0001-21	6A0-W0001-21

40QE/G



REF	OEM
REC688-W0001-22	688-W0001-22

75CETO/E75B/AED
85A/AED/AET
90AETO/TR



REF	OEM
REC64J-W0001-20	64J-W0001-20

F45/50
FT50
T50



REF	OEM
REC688-W0001-20	688-W0001-20

75A/AE
80A
85A/AE
90A/AEO/AETO/ETN



REF	OEM
REC68V-W0001-20	68V-W0001-20

F115



REF	OEM
REC69J-W0001-20-00	69J-W0001-20

F200/225



REF	OEM
REC6E5-W0001-F1	6E5-W0001-F1 6E5-W0001-21 6F3-W0001-21

115BETO/B/CEO/CETO/TXR
130BETO
E115AE

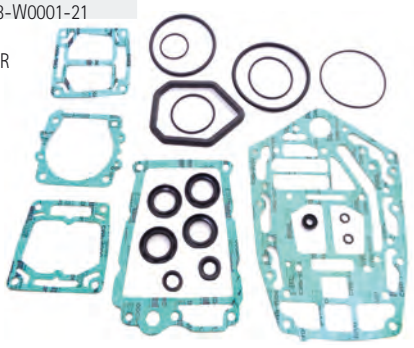

BOMBA DE AGUA WATER PUMP POMPA ACQUA POMPE À EAU

CUERPO BOMBA DE AGUA HOUSING, WATER PUMP CORPO, POMPA ACQUA CORPS DE POMPE À EAU

REF	OEM
PAF2.6-03000014	69M-G4311-00

F2.5

P. 283



REF	OEM
PAF4-03000019	68D-G4311-01

F4

P. 285
P. 343



REF	OEM
REC63V-44301-00	63V-44301-00-00

F6/8/15/9.9/13.5
T8/9.9
9.9F/FEM/MH/MSH/FMH
13.5AWH
15F/FMH/MSH/MH

P. 289
P. 291
P. 351



new

REF	OEM
PAF20-04040001	6AH-44311-00

F9.9 / 13.5 / 15/20 F
Ultima versión
Last version
Ultima versione
Dernière version

P. 293



REF	OEM
REC689-44311-00	689-44311-03

20C/CM
25D/DE
30A

P. 353



REF	OEM
REC663-44311-02	663-44311-02-00

25B/BETO
40N/H/E
50G/GEO/GETO
50D
55B/BET
E55CMH
60FEO/FETO/FEDO
60BE/BEM/BET
70CE

P. 357
P. 359
P. 369



RECAMBIOS MARINOS

REF	OEM
PAF25-04050001	61N-44311-01

25V
30G
F20
F25

P. 297
P. 355



REF	OEM
REC63D-44311-01	63D-44311-00

40V/VM/VE/TLR
C40M-T
50H/HR-M/HM
F40/45/50/60

P. 309
P. 315



REF	OEM
REC676-44311-00	676-44311-00

E40GM/JM
40GW/JW/G/QE/QWC



REF	OEM
REC688-44311-01	688-44311-01

60FETO/TR
E60H-E-M
70BETO/TR
75CETO/TLR
E75B
75A/AE-T-M-D
80A/AE-O-T
85A/AE-D-T
90A/AETO/AEO/TLR

P. 371
P. 373



REF	OEM
REC67F-44311-01	67F-44311-01-00

F80/100

P. 321



REF	OEM
REC61A-44311-00	6E5-44311-00

F80/100/115/150/200/225/250
150F/FET/TR/AET
Z150P/TXR
175D 200F/FETO/G/GETO
200AET
225B/DET/G
250GETO/AET
Z250DET/FET



P. 325 P. 329 P. 333 P. 339 P. 377 P. 381 P. 385 P. 386

new

REF	OEM
PAT40-04000201	66T-44311-00

40X/E40X-MLH
T25/FT25
F30/F40

P. 301
P. 305

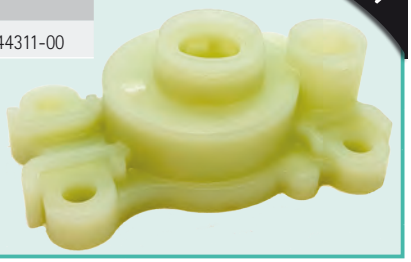

new

REF	OEM
REC6CE-44311-01	6CE-44311-00 6CE-44311-01

F250 (2011+) V6
F300 (2011+) V6

P. 335



new

REF	OEM
REC6H3-44311-00	6H3-44311-00

FT/T 50/60 HP (1997+)
60F (1984-99)



new

REF	OEM
REC6AW-44311-01	6AW-44311-00 6AW-44311-01

F300 (2008-11) V8
F350 (2008+) V8

P. 341



TAPA DE LA BOMBA — WATER PUMP, COVER — COPERCHIO POMPA — PLAQUE DE POMPE À EAU

REF	OEM
REC646-44323-00	646-44323-00

2B
2MSH
2BMH



REF	OEM
PAF2.6-03000010	69M-G4323-00

F2.5



REF	OEM
REC6L5-44323-00	6L5-44323-00

3A/AMH
3MSH



REF	OEM
REC67F-44323-00	67F-44323-00

F75/F80/F100



REF	OEM
REC68T-44323-00	68T-44323-00

F6
T8
F9.9
F20/6/9.9/8/13.5
T8/9.9



REF	OEM
REC63V-44323-00	63V-44323-00-00

9.9F/FMH/FEMH/MSH
F9.9/13.5/15
13.5AWH
15F/FM/MS



REF	OEM
REC6H3-44323-00	6H3-44323-00-00

25B/BETO
F45
50G/GE
T50
F50
FT50
60FE/TLR
FT60
T60
70B/ETN/BE



REF	OEM
REC61N-44323-00	61N-44323-00

25B/BMH/30H
E30HM
30G
E25A
25VE-M
F20/F25



REF	OEM
REC6P2-44323-00	6P2-44323-0

Z250
F225/F250



REF	OEM
REC63D-44323-00	63D-44323-00-00

F30/40/45/50/60
40V/VE-M/Y/YE
C40MLH/T
T50
50H/HM-R



REF	OEM
REC676-44323-00-40	676-44323-00

E40GMH/GW/JMH
40JWH/GWH
40QE/G/QM/QE-2/QWC

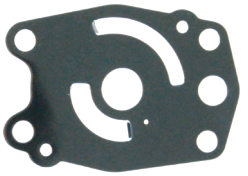

REF	OEM
REC66T-44323-00	66T-44323-00

40X/E40X/MLH
40XW/XMH
F30/40/T25



REF	OEM
REC663-44323-00	663-44323-00

50G/GEO/GETO
25Q/QEO/B
55B/BE/BM
30DET/DEO/DMH/ELH
60FEO
FETO
FEDO
70BEO/BETO/BEMO/CE
40N/H
50ETN/D/DE
25J/JEO/JETO/ESH
25Q/QEO/E55CMH
30DET/DEO/DMH/D
55B/BM/BET
40E/H
50D/DE
25J/JEO/JETO/ESH



REF	OEM
REC688-44323-00	688-44323-00-00

60FET/TR
75CETO/AED-T
70BET/TR
75A/AE-M/TLR/CETO/AED-T
E75B
80A/AET/TLR
85A/AE-D-T
90A/AET/ETN/TR



REF	OEM
REC6E5-44323-00-40	6E5-44323-00

100A/AETO/TLR
115CET/A/B/BET
C115TLR
130BET
140AET/BET



REF	OEM
REC68V-44323-00	6EK-44323-00

F115



REF	OEM
REC6G5-44323-00	6G5-44323-01

F150/200/225
Z150/175/250/300
VZ200
250AET/B/GET
225C/CET/D/DET
150F/FET/AET
175D/DET/AET
200F/FET/GE
225G
200AET/BET
150CET
175BET



KITS DE REPARACIÓN BOMBA DE AGUA
WATER PUMP SERVICE KITS
KIT RICAMBI POMPA ACQUA
KIT REPARATION DE POMPE À EAU

new

REF	OEM
REC6E0-W0078-A2	6E0-W0078-A2 6E0-W0078-00 6E0-W0078-01 6E0-W0078-02

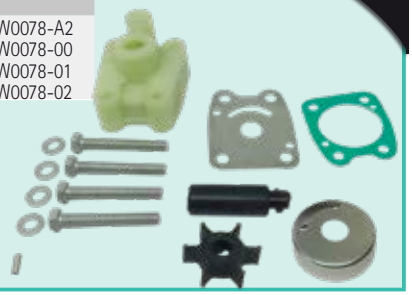

new

REF	OEM
REC69G-W0078-01	69G-W0078-01 69G-W0078-00

FT/T8 D/P/E/M/G (2005+)
FT/T9.9 E/G/M/L (2008+)



new

REF	OEM
REC6A1-W0078-01	6A1-W0078-01

2B (1985-88)



new

REF	OEM
REC6AH-W0078-00	6AH-W0078-00 6AH-W0078-01

F9.9 (2009+)
F13.5B (2007-09)
F15C/E/M (2007+)
F20B/M (2007+)



new

REF	OEM
REC6EE-W0078-01	6BX-WG0078-00 6EE-W0078-00 6EE-W0078-01

F4B/M (2010+)
F5A/M (2010+)
F6C/M (2010+)

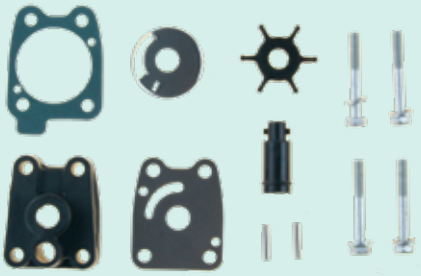

REF	OEM
REC63V-W0078-01	63V-W0078-00

9.9F
13.5AWH
15F
F9.9
F15
F13.5



new

REF	OEM
REC68T-W0078-00	68T-W0078-01 68T-W0078-00

F6A/B/M (2005-09)
F8C/F/M (2005+)
F9.9 F/M/J (2008+)



REF	OEM
REC682-W0078-A1	682-W0078-A1

9.9/15D
F8
F9.9



new

REF	OEM
REC6G1-W0078-A1	6G1-W0078-A1 6G1-W007 6N0-W007 6G1-W0078-0

6C/D/M/T (1984-14)
8C/N/J/F/T/M
(1984-18)

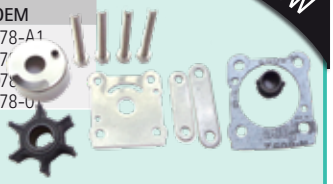

new

REF	OEM
REC61N-W0078-11	61N-W0078-11 61N-W0078-10

F20A/D (1998-17)
F25A/E/T/M/D (1998-18)



REF	OEM
REC689-W0078-04	689-W0078-04

20CM



REF	OEM
REC689-W0078-A6	689-W0078-A6

20C
25D



REF	OEM
REC6L2-W0078-00	6L2-W0078-00

20NE/NEMO/N/MLH/MSH/NW/NMH/D
20D/DEO/DEM/MSH/DM/MLH
20MSH/DMH/DWO



REF	OEM
REC6J8-W0078-A2	6J8-W0078-A1

25J/JEO
30D/DE/DMH



REF	OEM
REC6H4-W0078-00	6H4-W0078-00

25Q/QEO
40N/H/HE
E48CMH
50D/DE/AETN
E55CMH



new

REF	OEM
REC6BG-W0078-00	6BG-W0078-00

F30B (2009+)
F40A/F (2009+)



new

REF	OEM
REC6CJ-W0078-00	6CJ-W0078-00

F40G (2011+)
F70A (2011+)

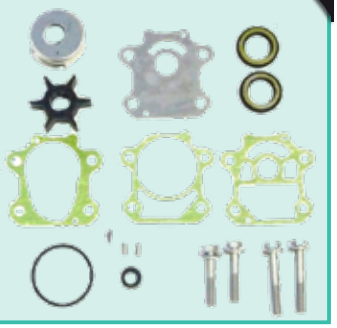

new

REF	OEM
REC63D-W0078-01	63D-W0078-01

40V/C40 (1998+)
50H (1997-03)
F45A (1997-00)
F50A/H/F/T (1997+)
F40A/E/Y/D/H (1999+)
F60A/B/C/T (2002+)
F40/45/50/60
40V/VMH/VETO/VMH
C40MLH/T/TLR
40VE/VEO/VES
40Y/YETO
50H/HET/HMH

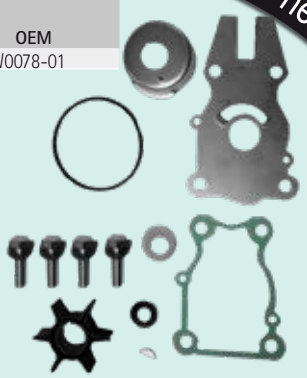

REF	OEM
REC679-W0078-A1	679-W0078-00

40QE



REF	OEM
REC6F5-W0078-A0	6F5-W0078-00

E40GMH
40GWH



RECAMBIOS MARINOS

REF	OEM
REC66T-W0078-00	66T-W0078-01

40X
E40X



REF	OEM
REC67F-W0078-00	67F-W0078-00

F80/100



new

REF	OEM
REC663-W0078-01	663-W0078-01

55B (1992-18)
55BET



REF	OEM
REC6N6-W0078-02	6N6-W0078-00

115B/BE/BET/CETO/TRX/CETO
130BET/TLR

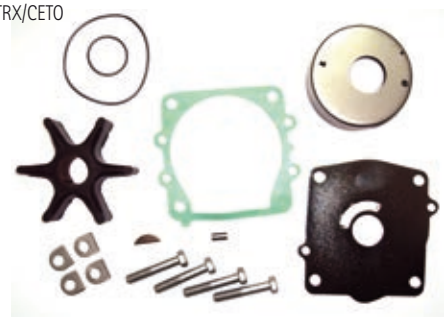

REF	OEM
REC6K5-W0078-01	6K5-W0078-01

E60HM
E-60H



REF	OEM
REC68V-W0078-00	68V-W0078-00

F115
FL115
LF115

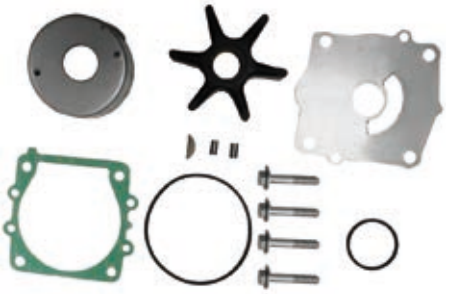

REF	OEM
REC6H3-W0078-02	6H3-W0078-00

60FE/FET/FEO/FETO
70AETN/B/BEH/BEO/CE



REF	OEM
REC65N-W0078-A1	65N-W0078-A1

D150H/N/NETOL

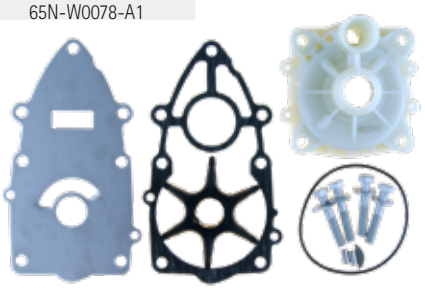

new

REF	OEM
REC6G5-W0078-A1	6G5-W0078-00 6G5-W0078-01 6G5-W0078-A1

150A/C/E (1984-91)
175A/B (1984-91)
200A/E/B (1984-91)
225A/B (1987-91)

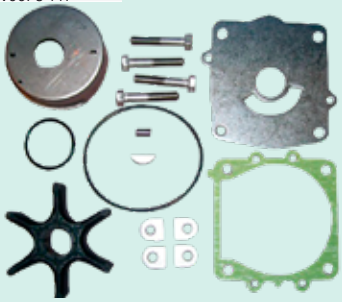

REF	OEM
REC692-W0078-02	692-W0078-02

60TR/FETO
75AED/AET
75CETO/TLR/E75B
70BETO/TR
80A
85A/AE/AED/AET/AEM
90A/AETO/AEMO/TLR
C90TRZ



new

REF	OEM
REC6P2-W0078-00	6P2-W0078-00

F225C/T (2008-15)
F250B/T/A (2009+)

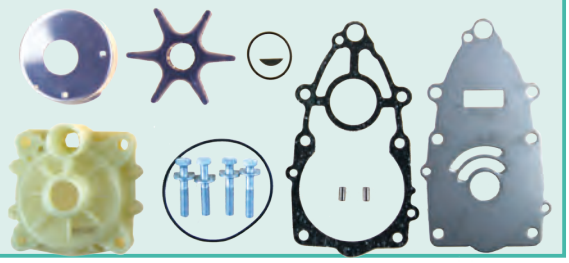

new

REF	OEM
REC6CE-W0078-01	6CE-W0078-01 6CE-W0078-00

F300A/B/C (2001+) V6
F250 C/D (20011+) V6
F225 C/F/L (2011+) V6

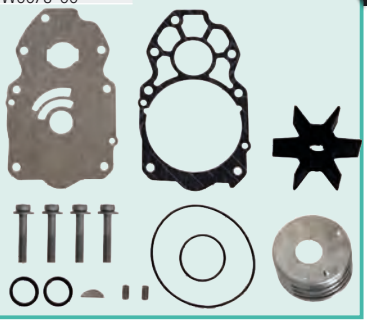

REF	OEM
REC61A-W0078-A1	61A-W0078-01

250ETD/AETO/AET
150FETO
175FETO
200FETO

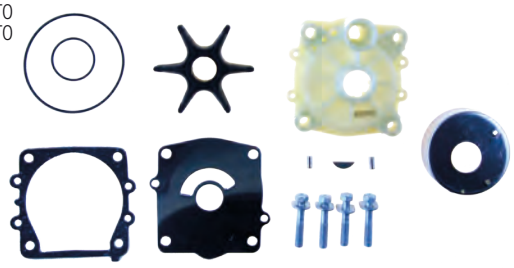

new

REF	OEM
REC6AW-W0078-00	6AW-W0078-00

F300A/T (2008-11) V8
F350A/C/T (2008+) V8

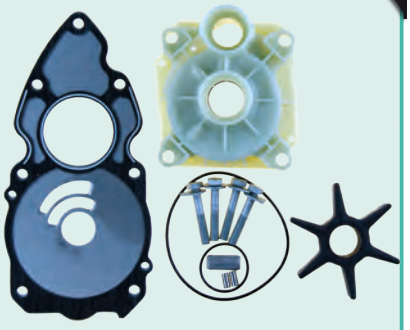

REF	OEM
REC60X-W0078-00	60X-W0078-00

Z250FETO
V250TLR
Z300BETO
V300TLR

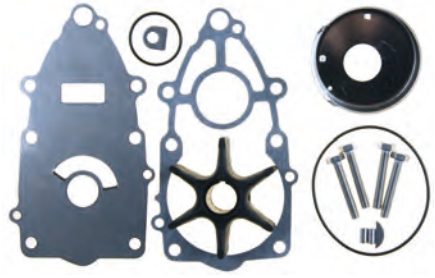

GUÍA KITS DE BOMBA DE AGUA — GUIDE OF WATER PUMP SERVICE KITS — GUIDA KIT POMPA ACQUA — GUIDE KITS POMPES À EAU

			REF	OEM
4AC/AS		1985-96	REC6E0-W0078-A2	6E0-W0078-A2, -00,-01,-02
5C/CS		1985-96		
F9.9	6CA1 - 6AC9	2009-16	REC6AH-W0078-00	6AH-W0078-00
F13.5	6AF1 - 6AF3	2007-09		
F15	6AG1 - 6AG9	2007-14		
F15	6AGA - 6AGB	2015-16		
F20	6AH1 - 6AH9	2007-14		
F20	6AHA - 6AHB	2015-16		
F300	6BK1 - 6BK4	2008-11	REC6AW-W0078-00	6AW-W0078-00
F300	6BJ1 - 6BJ4	2008-11		
F350	6AW1 - 6AW9	2008-15		
F350	6AX1 - 6AX9	2008-15		

			REF	OEM
F30	6BT1 - 6BT9	2009-16	REC6BG-W0078-00	6BG-W0078-00
F40	6BG1 - 6BG9	2009-16		
F40	6CY1 - 6CY7	2011-16	REC6CJ-W0078-00	6CJ-W0078-00
F70	6CJ1 - 6CJ7	2011-16		
F225	6CL1 - 6CL4	2011-13	REC6CE-W0078-01	6CE-W0078-00,-01
F225	6CM1 - 6CM4	2011-13		
F250	6CG1 - 6CG4	2011-13		
F250	6CH1 - 6CH4	2011-13		
F300	6CE1 - 6CE4	2011-13		
F300	6CF1 - 6CF4	2011-13		

GUÍA BOMBAS DE AGUA — GUIDE WATER PUMP — GUIDA POMPA ACQUA — GUIDE POMPE À EAU

				1	2	3	4	5	6	7	KIT
F2.5	69F0 > 69F3 60N1 > 60N5	2003		REC6L5-44352-00	PAF2.6-03000015	PAF2.6-03000010	PAF2.6-03000014	PAJASOF404-19-033	PAF4-03000021	PAF2.6-03000013	
F4	68R > 68R3 60P1 > 60P2	2002-09		REC6E0-44352-00	REC6E0-44322-02	PAF4-03000015	PAF4-03000019	PAF4-03000018	PAF4-03000021	PAF4-03000016	
F5		2010		REC6E0-44352-00	PAF6-03000002		PAF6-03000001		PAF4-03000021	PAF4-03000016	
F6B, BMH, A, AM, AW, ML, MH	6J6 > 6J7	2001-09		REC68T-44352-00	REC63V-44322-00	REC68T-44323-00	REC63V-44301-00	REC93210-44398	REC68T-44366-00	REC664-44338-00	REC68T-W0078-00
F6A, ML, MS, AM, BM	60R1 > 60R9 68T > 68T3 60RA > 60RB 6FW1	2000-06		REC68T-44352-00	REC63V-44322-00	REC68T-44323-00	REC63V-44301-00	REC93210-44398	REC68T-44366-00	REC664-44338-00	REC68T-W0078-00
F6 (1cyl)		2010		REC6E0-44352-00	PAF6-03000002		PAF6-03000001	PAF4-03000018	PAF4-03000021	PAF4-03000016	
F8AM, B, BE, BM	6G8	1986-95		REC682-44352-01	REC682-44322-00	REC682-44323-40		REC682-44315-00	REC682-44365-00	REC90280-03024	REC682-W0078-A1
F8C, ML, CM, MS, MH, ML, FM	6G9	2000-15		REC68T-44352-00	REC63V-44322-00	REC68T-44323-00	REC63V-44301-00	REC93210-44398	REC68T-44366-00	REC664-44338-00	REC68T-W0078-00
T8		2001-10		REC63V-44352-01	REC63V-44322-00	REC68T-44323-00	REC63V-44301-00	REC93210-44398	REC68T-44366-00	REC664-44338-00	
F9.9A, AE, AM	66N>66N8	1985-96		REC682-44352-01	REC682-44322-00	REC682-44323-40		REC682-44315-00	REC682-44365-00	REC90280-03024	REC682-W0078-A1
F9.9B, BE, BM	6AU1>6AU6 6DR1>6DR3	1985-96		REC682-44352-01	REC682-44322-00	REC682-44323-40		REC682-44315-00	REC682-44365-00	REC90280-03024	REC682-W0078-A1
F9.9	66R>66R8	1985-04		REC682-44352-01	REC682-44322-00	REC682-44323-40		REC682-44315-00	REC682-44365-00	REC90280-03024	REC682-W0078-A1
F9.9C, CE, CM, CW, MH	69C>69C1	1998-08		REC63V-44352-01	REC63V-44322-00	REC63V-44323-00	REC63V-44301-00	REC93210-44398	REC647-44366-00	REC664-44338-00	REC63V-W0078-01
F9.9F, FE, FM, MH, ML, JE, JM		2008-15		REC63V-44352-01	REC63V-44322-00	REC68T-44323-00	REC63V-44301-00	REC93210-44398	REC68T-44366-00	REC664-44338-00	REC68T-W0078-00
FT9.9D, DE, DM, DW		1999-08		REC63V-44352-01	REC63V-44322-00	REC63V-44323-00	REC63V-44301-00	REC93210-44398	REC647-44366-00	REC664-44338-00	REC63V-W0078-01
FT9.9D, DEP, PLR, TR	6CA1>6CA8	2000-02		REC63V-44352-01	REC63V-44322-00	REC63V-44323-00	REC63V-44301-00	REC93210-44398	REC647-44366-00	REC664-44338-00	REC63V-W0078-01
FT9.9		1985-99		REC682-44352-01	REC682-44322-00	REC682-44323-40		REC682-44315-00	REC682-44365-00	REC90280-03024	REC682-W0078-A1
T9.9	69V2>69V8	1991-99		REC682-44352-01	REC682-44322-00	REC682-44323-40		REC682-44315-00	REC682-44365-00	REC90280-03024	REC682-W0078-A1
F9.9HE,HMH	6P71>6P74	2009-15		REC63V-44352-01	REC63V-44322-00				PAF25-04050004	REC664-44338-00	REC6AH-W0078-00
T9.9	6AF1>6AF3	2005-06		REC63V-44352-01	REC63V-44322-00	REC63V-44323-00	REC63V-44301-00	REC93210-44398	REC647-44366-00	REC664-44338-00	REC63V-W0078-01
F13.5AE,AM	66M>66M7	2002-07		REC63V-44352-01	REC63V-44322-00	REC63V-44323-00	REC63V-44301-00	REC93210-44398	REC647-44366-00	REC664-44338-00	REC63V-W0078-01
F13.5AEP		2005-07		REC63V-44352-01	REC63V-44322-00	REC63V-44323-00	REC63V-44301-00	REC93210-44398	REC647-44366-00	REC664-44338-00	REC63V-W0078-01
F13.5B, BMH	6AG1>6AG9 6AGA	2007-09		REC63V-44352-01	REC63V-44322-00				PAF25-04050004	REC664-44338-00	REC6AH-W0078-00
F15A, AE, AM, EL, MH	65P1>65P5	1998-07		REC63V-44352-01	REC63V-44322-00	REC63V-44323-00	REC63V-44301-00	REC93210-44398	REC647-44366-00	REC664-44338-00	REC63V-W0078-01
F15	6DN1>6DN6	2006-11		REC63V-44352-01	REC63V-44322-00	REC68T-44323-00		REC93210-49046	PAF25-04050004	REC664-44338-00	
F15CE, CM, CW, EL, MH	6AH1>6AH9 6AHA	2007-15		REC63V-44352-01	REC63V-44322-00				PAF25-04050004	REC664-44338-00	REC6AH-W0078-00
F20AE	65W>65W9	2003-06		REC6H4-44352-02	REC61N-44322-00	REC61N-44323-00	PAF25-04050001	PAF25-04050003	PAF25-04050004	REC90280-03024	REC61N-W0078-11
F20DET	6BP1>6BP8	2011-15		REC6H4-44352-02	REC61N-44322-00	REC61N-44323-00	PAF25-04050001	PAF25-04050003	PAF25-04050004	REC90280-03024	REC61N-W0078-11
F20B, BE, BM, BW, EL, MH		2007-15		REC63V-44352-01	REC63V-44322-00				PAF25-04050004	REC664-44338-00	REC6AH-W0078-00
F25A, AE, AM, AW, EL, MH		1998-09		REC6H4-44352-02	REC61N-44322-00	REC61N-44323-00	PAF25-04050001	PAF25-04050003	PAF25-04050004	REC90280-03024	REC61N-W0078-11
F25DE, DM, MH	6BT1>6BT8	2009-215		REC6H4-44352-02	REC61N-44322-00	REC61N-44323-00	PAF25-04050001	PAF25-04050003	PAF25-04050004	REC90280-03024	REC61N-W0078-11
T25	66W>66W1	2001-06, 2009		REC6H4-44352-02	REC63D-44322-00	REC66T-44323-00		REC93210-59MG7		REC90280-03M03	REC66T-W0078-00
F30	60K1	2001-05		REC6H4-44352-02	REC63D-44322-00	REC66T-44323-00		REC93210-59MG7		REC90280-03M03	REC66T-W0078-00
F30BE		2009-15		REC6H4-44352-02	REC63D-44322-00	REC63D-44323-00		REC93210-59MG7	REC663-44366-00	REC90280-03M03	REC6BG-W0078-00
F40 A, ELH	6BG1>6BG8	1999-02		REC6H3-44352-00	REC63D-44322-00	REC63D-44323-00		REC93210-59MG7		REC90280-03024	REC63D-W0078-01
F40 CET	6AK1>6AK9 6AKA>6AKB	2002		REC6H3-44352-00	REC63D-44322-00	REC63D-44323-00		REC93210-59MG7		REC90280-03024	REC63D-W0078-01
F40	6CY1>6CY6	2000-08		REC6H4-44352-02	REC63D-44322-00	REC66T-44323-00		REC93210-59MG7		REC90280-03M03	REC66T-W0078-00
F40FE	62Y	2009-15		REC6H4-44352-02	REC63D-44322-00	REC63D-44323-00		REC93210-59MG7	REC663-44366-00	REC90280-03M03	REC6BG-W0078-00
F40D, DE, HE	62Y	2006-15		REC6H3-44352-00	REC63D-44322-00	REC63D-44323-00		REC93210-59MG7	REC663-44366-00	REC90280-03024	REC63D-W0078-01
F40GET	62Y>62Y6	2011-15		REC6H3-44352-00 REC63D-44322-00					REC663-44366-00	REC90280-03M03	REC6CJ-W0078-00
F45 AET	60A3 60AA	1999		REC6H4-44352-02	REC61N-44322-00	REC61N-44323-00	PAF25-04050001	PAF25-04050003	PAF25-04050004	REC90280-03024	REC61N-W0078-11
F50TJR	6C11>6C19	2003		REC6H4-44352-02	REC61N-44322-00	REC61N-44323-00	PAF25-04050001	PAF25-04050003	PAF25-04050004	REC90280-03024	REC61N-W0078-11
F50 A, AE, TJ, TL	6C1A>6C1C	1997-07		REC6H3-44352-00	REC63D-44322-00	REC63D-44323-00		REC93210-59MG7	REC663-44366-00	REC90280-03024	REC63D-W0078-01
F50 DETL	64J	1995-10		REC6H3-44352-00	REC63D-44322-00	REC63D-44323-00		REC93210-59MG7	REC663-44366-00	REC90280-03024	REC63D-W0078-01
F50F, FE, TR, TL		2005-12		REC6H3-44352-00	REC63D-44322-00	REC63D-44323-00		REC93210-59MG7	REC663-44366-00	REC90280-03024	REC63D-W0078-01
F50 HED	69W1>69W6	2013-15		REC6H3-44352-00	REC63D-44322-00	REC63D-44323-00		REC93210-59MG7	REC663-44366-00	REC90280-03024	REC63D-W0078-01
FT50B, T50TLR	6C51>6C59	1997-99		REC6H3-44352-00	REC63D-44322-00	REC63D-44323-00		REC93210-59MG7	REC663-44366-00	REC90280-03024	REC63D-W0078-01
T50	6C5A>6C5C	1996		REC6H3-44352-00	REC663-44322-00	REC6H3-44323-00		REC6H3-44315-00		REC90280-03024	REC6H3-W0078-02
F60 AE, TL, TJ		2002-07		REC6H3-44352-00	REC63D-44322-00	REC63D-44323-00		REC6H3-44315-00	REC663-44366-00	REC90280-03M03	REC63D-W0078-01
F60 A, C, CET, TR, TJR	6CJ1>6CJ6	2005-12		REC6H3-44352-00	REC63D-44322-00	REC63D-44323-00		REC6H3-44315-00	REC663-44366-00	REC90280-03M03	REC63D-W0078-01
F60 B, FET	6D61	2013-15		REC6H3-44352-00	REC63D-44322-00	REC63D-44323-00		REC6H3-44315-00	REC663-44366-00	REC90280-03M03	REC63D-W0078-01
T60	67G0>67G5	2003-11		REC6H3-44352-00	REC663-44322-00	REC6H3-44323-00		REC6H3-44315-00		REC90280-03M03	REC6H3-W0078-02
F70A, AET	6D71>6D79 6D7A>6D7C	2011-15		REC6H3-44352-00 REC63D-44322-00					REC663-44366-00	REC90280-03M03	REC6CJ-W0078-00
F75BET, TR, TLR		2005		REC67F-44352-00	REC67F-44322-00	REC67F-44323-00	REC67F-44311-01	REC688-44315-00		REC90280-04M04	REC67F-W0078-00
F80A, AET, TLR, TJR	67F>67F5	1999-03		REC67F-44352-00	REC67F-44322-00	REC67F-44323-00	REC67F-44311-01	REC688-44315-00		REC90280-04M04	REC67F-W0078-00
F80B, BET	6D91>6D99 6D9A>6D9C	2005-15		REC67F-44352-00	REC67F-44322-00	REC67F-44323-00	REC67F-44311-01	REC688-44315-00		REC90280-04M04	REC67F-W0078-00
F90	68V, 68V0, 68W0	2003-11		REC67F-44352-00	REC67F-44322-00	REC67F-44323-00	REC67F-44311-01	REC688-44315-00		REC90280-04M04	REC67F-W0078-00
F100A, AET, TLR, TRZ		1999-06		REC67F-44352-00	REC67F-44322-00	REC67F-44323-00	REC67F-44311-01	REC688-44315-00		REC90280-04M04	REC67F-W0078-00

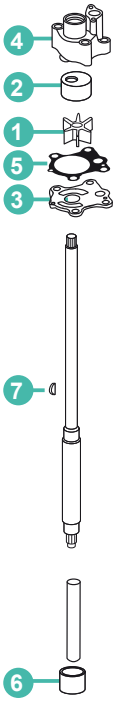

			1	2	3	4	5	6	7	KIT
F100DET	68V, 68V0, 68W0	2005-15	REC67F-44352-00	REC67F-44322-00	REC67F-44323-00	REC67F-44311-01	REC688-44315-00		REC90280-04M04	REC67F-W0078-00
F115A (68V/68V0)		2000-01	REC6E5-44352-01	REC61A-44322-02	REC6E5-44323-00-40	REC6E5-44311-00	REC93210-86M38	REC6E5-44366-00	REC90280-04M05	REC6N6-W0078-02
F115TLR (68V)	68V1>68V9 68VA>68VF	2000	REC6E5-44352-01	REC61A-44322-02	REC6E5-44323-00-40	REC6E5-44311-00	REC93210-86M38	REC6E5-44366-00	REC90280-04M05	REC6N6-W0078-02
F115TLR/ TRZ/ TXR	68W1>68W9 68WA>68WF	2000-01	REC6E5-44352-01	REC61A-44322-02	REC6E5-44323-00-40	REC6E5-44311-00	REC93210-86M38	REC6E5-44366-00	REC90280-04M05	REC6N6-W0078-02
LF115TXR (68W/68W0)	6EK1>6EK2 6EL1>6EL2	2000-01	REC6E5-44352-01	REC61A-44322-02	REC6E5-44323-00-40	REC6E5-44311-00	REC93210-86M38	REC6E5-44366-00	REC90280-04M05	REC6N6-W0078-02
F115A, AET, TJR	6EM1	2002-15	REC6E5-44352-01	REC61A-44322-02	REC68V-44323-00	REC61A-44311-00	REC93210-86M38	REC6E5-44365-00	REC90280-04M05	REC68V-W0078-00
LF/FL115A, AET, TX, TR, B, BET		2002-15	REC6E5-44352-01	REC61A-44322-02	REC68V-44323-00	REC61A-44311-00	REC93210-86M38	REC6E5-44365-00	REC90280-04M05	REC68V-W0078-00
F/LF/FL115B, BET		2014-15	REC6E5-44352-01	REC61A-44322-02	REC68V-44323-00	REC61A-44311-00	REC93210-86M38	REC6E5-44365-00	REC90280-04M05	REC68V-W0078-00
F130A, AET		2015	REC6E5-44352-01	REC61A-44322-02	REC68V-44323-00	REC61A-44311-00	REC93210-86M38	REC6E5-44365-00	REC90280-04M05	REC68V-W0078-00
F150/FL150		2004-12	REC6E5-44352-01	REC61A-44322-02	REC6G5-44323-00	REC61A-44311-00	REC93210-86M38	REC6E5-44365-00	REC90280-04M05	REC61A-W0078-A1
F200/FL200		2002-11	REC6E5-44352-01	REC61A-44322-02	REC6G5-44323-00	REC61A-44311-00	REC93210-86M38	REC6E5-44365-00	REC90280-04M05	REC61A-W0078-A1
VF200	6BB2>6BB9	2009-11	REC6E5-44352-01	REC61A-44322-02		REC61A-44311-00	REC93210-86M38	REC6E5-44365-00		
F225/FL225	6CL1>6CL4 6CM1>6CM4	2002-10	REC6E5-44352-01	REC61A-44322-02	REC6G5-44323-00	REC61A-44311-00	REC93210-86M38	REC6E5-44365-00	REC90280-04M05	REC61A-W0078-A1
F225/FL225		2007-09 (20")	REC6E5-44352-01	REC61A-44322-02	REC6P2-44323-00	REC61A-44311-00	REC93210-86M38	REC6E5-44365-00	REC90280-04M05	REC6P2-W0078-00
F225CET		2009-15	REC6E5-44352-01	REC61A-44322-02	REC6P2-44323-00	REC61A-44311-00	REC93210-86M38	REC6E5-44365-00	REC90280-04M05	REC6P2-W0078-00
LF/FL/F225CA, FET	6BR1>6BR3 6BS1>6BS3	2011-13	REC6CE-44352-00							
VF225	6P2A 6P23>6P29	2009-11	REC6E5-44352-01	REC61A-44322-02		REC61A-44311-00	REC93210-86M38	REC6E5-44365-00		
F250/FL250	6P33>6P39	2005	REC6E5-44352-01	REC61A-44322-02	REC6G5-44323-00	REC61A-44311-00	REC93210-86M38	REC6E5-44365-00	REC90280-04M05	REC61A-W0078-A1
FL/F250BET	6CG1>6CG4 6CH1>6CH4	2001-11	REC6E5-44352-01	REC61A-44322-02	REC6P2-44323-00	REC61A-44311-00	REC93210-86M38	REC6E5-44365-00	REC90280-04M05	REC6P2-W0078-00
F250A, AET, TR, TUR		2007-13	REC6E5-44352-01	REC61A-44322-02	REC6P2-44323-00	REC61A-44311-00	REC93210-86M38	REC6E5-44365-00	REC90280-04M05	REC6P2-W0078-00
LF/FL250A, AET, TR, TX	6CE1>6CE4 6CF1>6CF4	2007-12	REC6E5-44352-01	REC61A-44322-02	REC6P2-44323-00	REC61A-44311-00	REC93210-86M38	REC6E5-44365-00	REC90280-04M05	REC6P2-W0078-00
LF/FL/F250CA, DET	6BJ1>6BJ4 6BK1>6BK4	2011-13	REC6CE-44352-00							
VF250	6AW1>6AW9	2009-10	REC6E5-44352-01	REC61A-44322-02		REC61A-44311-00	REC93210-86M38	REC6E5-44365-00	REC90280-04M05	
F300/FL-300BET, CA	6AX1>6AX9	2011-13	REC6CE-44352-00							
F300/FL300AET		2008-11	CEF500389N							REC6AW-W0078-00
F350AET, CB, TRG, TUR		2008-15	CEF500389N							REC6AW-W0078-00
LF/ FL350AET, CB, TRG, TUR		2008-15	CEF500389N							REC6AW-W0078-00

2T STROKES GUÍA BOMBAS DE AGUA / GUIDE WATER PUMP / GUIDA POMPA ACQUA / GUIDE POMPE À EAU

			1	2	3	4	5	6	7	KIT
2B	6A1	1985-99			REC646-44323-00					REC6A1-W0078-01
2B, MSHA	6A11>6A12 6F89	2002-10	REC646-44352-01		REC646-44323-00					
4AC, AS	6E0>6E1	1985-96	REC6E0-44352-00	REC6E0-44322-02	PAF4-03000015			PAF4-03000021		REC6E0-W0078-A2
5C, CS	6E3>6E4	1985-96	REC6E0-44352-00	REC6E0-44322-02	PAF4-03000015			PAF4-03000021		REC6E0-W0078-A2
6 D /DEM	6H8	1984-96	REC6G1-44352-00	REC6G1-44322-00	REC6G1-44323-00		REC6G1-44315-A0	REC647-44366-00	REC90280-03024	REC6G1-W0078-A1
6 J/ C / CEM	6H6	1984-96	REC6G1-44352-00	REC6G1-44322-00	REC6G1-44323-00		REC6G1-44315-A0	REC647-44366-00	REC90280-03024	REC6G1-W0078-A1
8 N/ J / C / CEM	6G1	1984-96	REC6G1-44352-00	REC6G1-44322-00	REC6G1-44323-00		REC6G1-44315-A0	REC647-44366-00	REC90280-03024	REC6G1-W0078-A1
9.9D	6,00E+007	1984-95	REC682-44352-01	REC682-44322-00	REC682-44323-40		REC682-44315-00	REC682-44365-00	REC90280-03024	REC682-W0078-A1
9.9F, FEM, FM, MH, MS	63V	1995-00	REC63V-44352-01	REC63V-44322-00	REC63V-44323-00	REC63V-44301-00	REC93210-44398	REC647-44366-00	REC664-44338-00	REC63V-W0078-01
13.5AWH	63V	1998	REC63V-44352-01	REC63V-44322-00	REC63V-44323-00	REC63V-44301-00	REC93210-44398	REC647-44366-00	REC664-44338-00	REC63V-W0078-01
15D	6,00E+008	1984-95	REC682-44352-01	REC682-44322-00	REC682-44323-40		REC682-44315-00	REC682-44365-00	REC90280-03024	REC682-W0078-A1
15F, FEM, MH, MS	63W	1995-00	REC63V-44352-01	REC63V-44322-00	REC63V-44323-00	REC63V-44301-00	REC93210-44398	REC647-44366-00	REC664-44338-00	REC63V-W0078-01
20D, DE, DM, MLH, MSH, DW	6L3>6L39	1998-11	REC6L2-44352-00	REC6L2-44322-00			REC93210-45161	PAF25-04050004	PAF25-04000015	REC6L2-W0078-00
20C	6A9/ 6A90/ 6A91	1997-02	REC689-44352-02	REC689-W4432-01	REC689-44323-00	REC689-44311-00	REC689-44324-A0	REC689-44366-00	REC664-44338-00	REC689-W0078-A6
20CM	6A9	1992	REC689-44352-02	REC689-W4432-01	REC689-44323-00	REC689-44311-00	REC689-44324-A0	REC689-44366-00	REC664-44338-00	REC689-W0078-A6
25D	6950	2001	REC689-44352-02	REC689-W4432-01	REC689-44323-00	REC689-44311-00	REC689-44324-A0	REC689-44366-00	REC664-44338-00	REC689-W0078-A6
25		1984-85	REC689-44352-02	REC689-W4432-01	REC689-44323-00	REC689-44311-00	REC689-44324-A0	REC689-44366-00	REC664-44338-00	REC689-W0078-04
25D, N, NE, MLH, MSH, NMH	6L2>6L29	1998-10	REC6L2-44352-00	REC6L2-44322-00			REC93210-45161	PAF25-04050004	PAF25-04000015	REC6L2-W0078-00
25NMH, NW, MH	6L2A>6L2F	2011-15	REC6L2-44352-00	REC6L2-44322-00			REC93210-45161	PAF25-04050004	PAF25-04000015	REC6L2-W0078-00
25 J, JEO	6K9	1987-94	REC6H4-44352-02	REC663-44322-00	REC663-44323-00	REC663-44311-02	REC663-44315-A0	REC663-44366-00	REC90280-03024	REC6J8-W0078-A2
C25		1990-97	REC689-44352-02	REC689-W4432-01	REC689-44323-00	REC689-44311-00	REC689-44324-A0	REC689-44366-00	REC664-44338-00	REC689-W0078-A6
CV25		1990	REC689-44352-02	REC689-W4432-01	REC689-44323-00	REC689-44311-00	REC689-44324-A0	REC689-44366-00	REC664-44338-00	REC689-W0078-A6
30		1984-85	REC689-44352-02	REC689-W4432-01	REC689-44323-00	REC689-44311-00	REC689-44324-A0	REC689-44366-00	REC664-44338-00	REC689-W0078-04
30		1986	REC689-44352-02	REC689-W4432-01	REC689-44323-00	REC689-44311-00	REC689-44324-A0	REC689-44366-00	REC664-44338-00	REC689-W0078-A6
30D		1986-94	REC6H4-44352-02	REC663-44322-00	REC663-44323-00	REC663-44311-02	REC663-44315-A0	REC663-44366-00	REC90280-03024	REC682-W0078-A1
30D, DE, DMH	6J8	1986-94	REC6H4-44352-02	REC663-44322-00	REC663-44323-00	REC663-44311-02	REC663-44315-A0	REC663-44366-00	REC90280-03024	REC6J8-W0078-A2
C30		1990-92	REC689-44352-02	REC689-W4432-01	REC689-44323-00	REC689-44311-00	REC689-44324-A0	REC689-44366-00	REC664-44338-00	REC689-W0078-A6
C30		1993-97	REC6H4-44352-02	REC61N-44322-00	REC61N-44323-00	PAF25-04050001	PAF25-04050003	PAF25-04050004	REC90280-03024	REC61N-W0078-11
40		1984-87	REC6H4-44352-02	REC663-44322-00	REC663-44323-00	REC663-44311-02	REC663-44315-A0	REC663-44366-00	REC90280-03024	REC6H4-W0078-00
40		1988-94	REC6H4-44352-02	REC663-44322-00	REC663-44323-00		REC663-44315-A0	REC663-44366-00	REC90280-03024	REC6H4-W0078-00

			1	2	3	4	5	6	7	KIT
40		1995-05	REC6H3-44352-00	REC63D-44322-00	REC63D-44323-00	REC63D-44311-01	REC93210-59MG7	REC663-44366-00	REC90280-03024	REC63D-W0078-01
E40GMH	6F62	2003	REC6F5-44352-00	REC676-44322-00	REC676-44323-00-40	REC676-44311-00	REC676-44315-00	REC663-44366-00	REC90280-04M00	REC6F5-W0078-A0
40GWH	6F62	2003	REC6F5-44352-00	REC676-44322-00	REC676-44323-00-40	REC676-44311-00	REC676-44315-00	REC663-44366-00	REC90280-04M00	REC6F5-W0078-A0
C40		1990-91	REC6F5-44352-00	REC676-44322-00	REC676-44323-00-40	REC676-44311-00	REC676-44315-00	REC663-44366-00	REC90280-04M00	REC6F5-W0078-A0
C40		1992-97	REC6F5-44352-00	REC676-44322-00	REC676-44323-00-40	REC676-44311-00	REC676-44315-00	REC663-44366-00	REC90280-04M00	REC679-W0078-A1
40QE	6R6	1990	REC6F5-44352-00	REC676-44322-00	REC676-44323-00-40	REC676-44311-00	REC676-44315-00	REC663-44366-00	REC90280-04M00	REC679-W0078-A1
EK40JMH	6H95	2006	REC6F5-44352-00	REC676-44322-00	REC676-44323-00-40	REC676-44311-00	REC676-44315-00	REC663-44366-00	REC90280-04M00	REC679-W0078-A1
C40MLH	63B>63B2	2000-03	REC6H3-44352-00	REC63D-44322-00	REC63D-44323-00	REC63D-44311-01	REC93210-59MG7	REC663-44366-00	REC90280-03024	REC63D-W0078-01
C40T, TLRZ	63D>63D6	1996-03	REC6H3-44352-00	REC63D-44322-00	REC63D-44323-00	REC63D-44311-01	REC93210-59MG7	REC663-44366-00	REC90280-03024	REC63D-W0078-01
P40		1998	REC6H3-44352-00	REC63D-44322-00	REC63D-44323-00	REC63D-44311-01	REC93210-59MG7	REC663-44366-00	REC90280-03024	REC63D-W0078-01
40V, VE	63D>63D6	1996-03	REC6H3-44352-00	REC63D-44322-00	REC63D-44323-00	REC63D-44311-01	REC93210-59MG7	REC663-44366-00	REC90280-03024	REC63D-W0078-01
40V, VE, VEO, VES	63C>63C9 63CA>63CF	1997-15	REC6H3-44352-00	REC63D-44322-00	REC63D-44323-00	REC63D-44311-01	REC93210-59MG7	REC663-44366-00	REC90280-03024	REC63D-W0078-01
40V, VMH	63B>63BF	1995-15	REC6H3-44352-00	REC63D-44322-00	REC63D-44323-00	REC63D-44311-01	REC93210-59MG7	REC663-44366-00	REC90280-03024	REC63D-W0078-01
50		1984-87	REC6H4-44352-02	REC663-44322-00	REC663-44323-00	REC663-44311-02	REC663-44315-A0	REC663-44366-00	REC90280-03024	REC6H4-W0078-00
50		1988-94	REC6H4-44352-02	REC663-44322-00	REC663-44323-00	REC663-44311-02	REC663-44315-A0	REC663-44366-00	REC90280-03024	REC6H4-W0078-00
50HMDO, H	62W,63G	1995-00	REC6H3-44352-00	REC63D-44322-00	REC63D-44323-00	REC63D-44311-01	REC93210-59MG7	REC663-44366-00	REC90280-03024	REC63D-W0078-01
50H, HEM, HWH/ C50TLR	62X>62X5	2000-03	REC6H3-44352-00	REC63D-44322-00	REC63D-44323-00	REC63D-44311-01	REC93210-59MG7	REC663-44366-00	REC90280-03024	REC63D-W0078-01
C50		1998-01	REC6H3-44352-00	REC63D-44322-00	REC63D-44323-00	REC63D-44311-01	REC93210-59MG7	REC663-44366-00	REC90280-03024	REC63D-W0078-01
PRO 50		1987	REC6H4-44352-02	REC663-44322-00	REC663-44323-00	REC663-44311-02	REC663-44315-A0	REC663-44366-00	REC90280-03024	REC6H4-W0078-00
PRO 50		1988-90	REC6H4-44352-02	REC663-44322-00	REC663-44323-00	REC663-44311-02	REC663-44315-A0	REC663-44366-00	REC90280-03024	REC6H4-W0078-00
P50		1991-93	REC6H4-44352-02	REC663-44322-00	REC663-44323-00	REC663-44311-02	REC663-44315-A0	REC663-44366-00	REC90280-03024	REC6H4-W0078-00
P50		1995-96	REC6H3-44352-00	REC689-W4432-01	REC63D-44323-00	REC63D-44311-01	REC93210-59MG7	REC663-44366-00	REC90280-03024	REC63D-W0078-01
55B, BET, BM	697	1992-00	REC6H3-44352-00	REC663-44322-00	REC663-44323-00	REC663-44311-02	REC663-44315-A0	REC663-44366-00	REC90280-03M03	REC663-W0078-01
55B, BET, BM	6970>6971	1989	REC6H3-44352-00	REC663-44322-00	REC663-44323-00	REC663-44311-02	REC663-44315-A0	REC663-44366-00	REC90280-03M03	REC663-W0078-01
60		2001-03	REC6H3-44352-00	REC663-44322-00	REC6H3-44323-00		REC6H3-44315-00	REC663-44366-00	REC90280-03M03	REC6H3-W0078-02
60		2004-05	REC688-44352-03	REC688-44322-00	REC688-44323-00	REC688-44311-01	REC688-44315-00	REC663-44366-00	REC90280-04M04	REC692-W0078-02
C60		1996-01	REC6H3-44352-00	REC663-44322-00	REC6H3-44323-00		REC6H3-44315-00	REC663-44366-00	REC90280-03M03	REC6H3-W0078-02
E60		1995-96	REC6H3-44352-00	REC663-44322-00	REC6H3-44323-00		REC6H3-44315-00	REC663-44366-00	REC90280-03M03	REC6H3-W0078-02
E-60H/ E60HMH	6K5	1997-00	REC6H3-44352-00		REC6H3-44323-00		REC6H3-44315-00	REC663-44366-00	REC90280-03M03	REC6K5-W0078-01
P60		1991	REC6H3-44352-00	REC663-44322-00	REC6H3-44323-00		REC6H3-44315-00	REC663-44366-00	REC90280-03M03	REC6H3-W0078-02
P60		1992-99	REC6H3-44352-00	REC663-44322-00	REC6H3-44323-00		REC6H3-44315-00	REC663-44366-00	REC90280-03M03	REC6H3-W0078-02
70		1 984-03	REC6H3-44352-00	REC663-44322-00	REC6H3-44323-00		REC6H3-44315-00	REC663-44366-00	REC90280-03M03	REC6H3-W0078-02
70		2004-09	REC688-44352-03	REC688-44322-00	REC688-44323-00	REC688-44311-01	REC688-44315-00	REC663-44366-00	REC90280-04M04	REC692-W0078-02
C70		2000-01	REC6H3-44352-00	REC663-44322-00	REC6H3-44323-00		REC6H3-44315-00	REC663-44366-00	REC90280-03M03	REC6H3-W0078-02
C75		1994-99	REC688-44352-03	REC688-44322-00	REC688-44323-00	REC688-44311-01	REC688-44315-00	REC663-44366-00	REC90280-04M04	REC692-W0078-02
E75		1995-00	REC688-44352-03		REC688-44323-00	REC688-44311-01	REC688-44315-00	REC663-44366-00	REC90280-04M04	REC692-W0078-02
P75		1996-99	REC688-44352-03	REC688-44322-00	REC688-44323-00	REC688-44311-01	REC688-44315-00	REC663-44366-00	REC90280-04M04	REC692-W0078-02
75CETO, TLR	67P1>67P9	2003-2011	REC688-44352-03	REC688-44322-00	REC688-44323-00	REC688-44311-01	REC688-44315-00	REC663-44366-00	REC90280-04M04	REC692-W0078-02
75CETO	67PA>67PE	2012-15	REC688-44352-03	REC688-44322-00	REC688-44323-00	REC688-44311-01	REC688-44315-00	REC663-44366-00	REC90280-04M04	REC692-W0078-02
75A, AE	692>6928 692A>692C	1997-07	REC688-44352-03	REC688-44322-00	REC688-44323-00	REC688-44311-01	REC688-44315-00	REC663-44366-00	REC90280-04M04	REC692-W0078-02
80A, AEO, AEM	6H0>6H01	1997-02	REC688-44352-03	REC688-44322-00	REC688-44323-00	REC688-44311-01	REC688-44315-00	REC663-44366-00	REC90280-04M04	REC692-W0078-02
C80		1997	REC688-44352-03	REC688-44322-00	REC688-44323-00	REC688-44311-01	REC688-44315-00	REC663-44366-00	REC90280-04M04	REC692-W0078-02
85A, AED, AET	688>6882	1997-03	REC688-44352-03	REC688-44322-00	REC688-44323-00	REC688-44311-01	REC688-44315-00	REC663-44366-00	REC90280-04M04	REC692-W0078-02
85A	688	1990	REC682-44352-01	REC682-44322-00	REC682-44323-40		REC682-44315-00	REC682-44365-00	REC90280-03024	REC682-W0078-A1
C85		1989-97	REC688-44352-03	REC688-44322-00	REC688-44323-00	REC688-44311-01	REC688-44315-00	REC663-44366-00	REC90280-04M04	REC692-W0078-02
CV85		1989-91	REC688-44352-03	REC688-44322-00	REC688-44323-00	REC688-44311-01	REC688-44315-00	REC663-44366-00	REC90280-04M04	REC692-W0078-02
90AEO	6H1	1992	REC682-44352-01	REC682-44322-00	REC682-44323-40		REC682-44315-00	REC682-44365-00	REC90280-03024	REC682-W0078-A1
90A, AE, TR, TLR, FE, BET	6H1>6H39 6H1A>6H3F 6H2C>6H2J	1997-15	REC688-44352-03	REC688-44322-00	REC688-44323-00	REC688-44311-01	REC688-44315-00	REC663-44366-00	REC90280-04M04	REC692-W0078-02
B90		1997-99	REC688-44352-03	REC688-44322-00	REC688-44323-00	REC688-44311-01	REC688-44315-00	REC663-44366-00	REC90280-04M04	REC692-W0078-02
C90		1997-01	REC688-44352-03	REC688-44322-00	REC688-44323-00	REC688-44311-01	REC688-44315-00	REC663-44366-00	REC90280-04M04	REC692-W0078-02
100A/ AETO	64W	1996	REC6E5-44352-01	REC61A-44322-02	REC6E5-44323-00-40	REC61A-44311-00	REC6E5-44315-A0	REC6E5-44366-00	REC90280-04M05	REC6N6-W0078-02
100A/ TLR	64W/ 64W0	1997-01	REC6E5-44352-01	REC6E5-44322-00	REC6E5-44323-00-40	REC6E5-44311-00	REC93210-86M38	REC6E5-44366-00	REC90280-04M05	REC6N6-W0078-02
115B/ BE	6E5/ 6E50/ 6E51	1998-02	REC6E5-44352-01	REC6E5-44322-00	REC6E5-44323-00-40	REC6E5-44311-00	REC93210-86M38	REC6E5-44366-00	REC90280-04M05	REC6N6-W0078-02
115B/ BE/ BETO	6,00E+005	1993-96	REC6E5-44352-01	REC61A-44322-02	REC6E5-44323-00-40	REC61A-44311-00	REC6E5-44315-A0	REC6E5-44366-00	REC90280-04M05	REC6N6-W0078-02
115BE	6E5	1997	REC6E5-44352-01	REC6E5-44322-00	REC6E5-44323-00-40	REC6E5-44311-00	REC93210-86M38	REC6E5-44366-00	REC90280-04M05	REC6N6-W0078-02
115C	6N6 6N61	2000-02	REC6E5-44352-01	REC6E5-44322-00	REC6E5-44323-00-40	REC6E5-44311-00	REC93210-86M38	REC6E5-44366-00	REC90280-04M05	REC6N6-W0078-02
115CEO/ CETO	6N6	1993-96	REC6E5-44352-01	REC61A-44322-02	REC6E5-44323-00-40	REC61A-44311-00	REC6E5-44315-A0	REC6E5-44366-00	REC90280-04M05	REC6N6-W0078-02
115CET/ CETO/ TR/ TLR	6N6-6N69 6N6A-6N6E	1997-13	REC6E5-44352-01	REC6E5-44322-00	REC6E5-44323-00-40	REC6E5-44311-00	REC93210-86M38	REC6E5-44366-00	REC90280-04M05	REC6N6-W0078-02
115TXRZ	6N60	2001	REC6E5-44352-01	REC6E5-44322-00	REC6E5-44323-00-40	REC6E5-44311-00	REC93210-86M38	REC6E5-44366-00	REC90280-04M05	REC6N6-W0078-02
C115-115TLR	6N6/6E5	1998-00	REC6E5-44352-01	REC6E5-44322-00	REC6E5-44323-00-40	REC6E5-44311-00	REC93210-86M38	REC6E5-44366-00	REC90280-04M05	REC6N6-W0078-02
C115		1991-92	REC6E5-44352-01	REC6E5-44322-00	REC6E5-44323-00-40	REC6E5-44311-00	REC93210-86M38	REC6E5-44366-00	REC90280-04M05	REC6N6-W0078-02
C115		1993-00	REC6E5-44352-01	REC61A-44322-02	REC6E5-44323-00-40	REC61A-44311-00	REC93210-86M38	REC6E5-44366-00	REC90280-04M05	REC6N6-W0078-02
P115	62A	1993-96	REC6E5-44352-01	REC61A-44322-02	REC6E5-44323-00-40	REC61A-44311-00	REC93210-86M38	REC6E5-44366-00	REC90280-04M05	REC6N6-W0078-02
115	6N6/6E5	1984-94	REC6E5-44352-01	REC61A-44322-02	REC6E5-44323-00-40	REC6E5-44311-00	REC93210-86M38	REC6E5-44366-00	REC90280-04M05	REC6N6-W0078-02
130 BETO	6N7/ 6N70/ 6N77	1997-07	REC6E5-44352-01	REC61A-44322-02	REC6E5-44323-00-40	REC6E5-44311-00	REC93210-86M38	REC6E5-44366-00	REC90280-04M05	REC6N6-W0078-02
130TLR	6N7	2000	REC6E5-44352-01	REC61A-44322-02	REC6E5-44323-00-40	REC6E5-44311-00	REC93210-86M38	REC6E5-44366-00	REC90280-04M05	REC6N6-W0078-02
L130BETO	6N4	1993-96	REC6E5-44352-01	REC61A-44322-02	REC6E5-44323-00-40	REC61A-44311-00	REC6E5-44315-A0	REC6E5-44366-00	REC90280-04M05	REC6N6-W0078-02

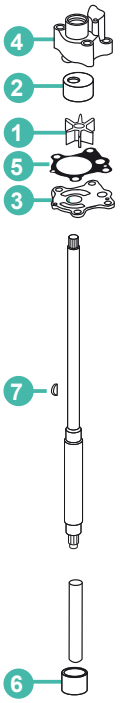

			1	2	3	4	5	6	7	KIT
L130BETO	6N4/6N40	1997-01	REC6E5-44352-01	REC61A-44322-02	REC6E5-44323-00-40	REC6E5-44311-00	REC93210-86M38	REC6E5-44366-00	REC90280-04M05	REC6N6-W0078-02
130	6L1/6N7	1988-92	REC6E5-44352-01	REC6E5-44322-00	REC6E5-44323-00-40	REC6E5-44311-00	REC93210-86M38	REC6E5-44366-00	REC90280-04M05	REC6N6-W0078-02
130 BETO	6N7	1993-96	REC6E5-44352-01	REC61A-44322-02	REC6E5-44323-00-40	REC61A-44311-00	REC6E5-44315-A0	REC6E5-44366-00	REC90280-04M05	REC6N6-W0078-02
130 / L130		1997-01	REC6E5-44352-01	REC61A-44322-02	REC6E5-44323-00-40	REC61A-44311-00	REC93210-86M38	REC6E5-44366-00	REC90280-04M05	REC6N6-W0078-02
130		2002-04	REC6E5-44352-01	REC61A-44322-02	REC6E5-44323-00-40	REC61A-44311-00	REC93210-86M38	REC6E5-44366-00	REC90280-04M05	REC6N6-W0078-02
L130	6L6/6N4	1989-92	REC6E5-44352-01	REC6E5-44322-00	REC6E5-44323-00-40	REC6E5-44311-00	REC93210-86M38	REC6E5-44366-00	REC90280-04M05	REC6N6-W0078-02
L130	6N4	1993-96	REC6E5-44352-01	REC61A-44322-02	REC6E5-44323-00-40	REC61A-44311-00	REC93210-86M38	REC6E5-44366-00	REC90280-04M05	REC6N6-W0078-02
L150CETO	6R2 / 6R0	1992-95	REC6E5-44352-01	REC61A-44322-02	REC6G5-44323-00	REC61A-44311-00	REC93210-86M38	REC6E5-44366-00	REC90280-04M05	REC61A-W0078-A1
D150H	65N0>65N1	2001-02	REC6E5-44352-01	REC61A-44322-02		REC61A-44311-00	REC93210-86M38	REC6E5-44366-00	REC90280-04M05	REC65N-W0078-A1
150F/ S150FETO	64C	1996	REC6E5-44352-01	REC6E5-44322-00	REC6E5-44323-00-40	REC6E5-44311-00	REC93210-86M38	REC6E5-44366-00	REC90280-04M05	REC6G5-W0078-A1
150	6R2	1992-09	REC6E5-44352-01	REC61A-44322-02	REC6G5-44323-00	REC61A-44311-00	REC93210-86M38	REC6E5-44366-00	REC90280-04M05	REC61A-W0078-A1
L150FETO	64G	1996	REC6E5-44352-01	REC6E5-44322-00	REC6E5-44323-00-40	REC6E5-44311-00	REC93210-86M38	REC6E5-44366-00	REC90280-04M05	REC6G5-W0078-A1
L150	6R0	1992-99	REC6E5-44352-01	REC61A-44322-02	REC6G5-44323-00	REC61A-44311-00	REC93210-86M38	REC6E5-44366-00	REC90280-04M05	REC61A-W0078-A1
P150		1986-91	REC6E5-44352-01	REC6E5-44322-00	REC6E5-44323-00-40	REC6E5-44311-00	REC93210-86M38	REC6E5-44366-00	REC90280-04M05	REC6G5-W0078-A1
P150		1992-99	REC6E5-44352-01	REC61A-44322-02	REC6G5-44323-00	REC61A-44311-00	REC93210-86M38	REC6E5-44366-00	REC90280-04M05	REC61A-W0078-A1
150/175/ 200ETLN		1984	REC6E5-44352-01	REC6E5-44322-00	REC6E5-44323-00-40	REC6E5-44311-00	REC93210-86M38	REC6E5-44366-00	REC90280-04M05	REC6G5-W0078-A1
PRO V150	6J9	1986-89	REC6E5-44352-01	REC6E5-44322-00	REC6E5-44323-00-40	REC6E5-44311-00	REC93210-86M38	REC6E5-44366-00	REC90280-04M05	REC6G5-W0078-A1
PRO V150	6N9	1990	REC6E5-44352-01	REC6E5-44322-00	REC6E5-44323-00-40	REC6E5-44311-00	REC93210-86M38	REC6E5-44366-00	REC90280-04M05	REC6G5-W0078-A1
PX150		1999	REC6E5-44352-01	REC61A-44322-02	REC6G5-44323-00	REC61A-44311-00	REC93210-86M38	REC6E5-44366-00	REC90280-04M05	REC61A-W0078-A1
SX150		1999-04	REC6E5-44352-01	REC61A-44322-02	REC6G5-44323-00	REC61A-44311-00	REC93210-86M38	REC6E5-44366-00	REC90280-04M05	REC61A-W0078-A1
V150		2000-08	REC6E5-44352-01	REC61A-44322-02	REC6G5-44323-00	REC61A-44311-00	REC93210-86M38	REC6E5-44366-00	REC90280-04M05	REC61A-W0078-A1
VZ150		2001-09	REC6E5-44352-01	REC61A-44322-02	REC6G5-44323-00	REC61A-44311-00	REC93210-86M38	REC6E5-44366-00	REC90280-04M05	REC61A-W0078-A1
Z150/ LZ150		2001-05	REC6E5-44352-01	REC61A-44322-02	REC6G5-44323-00	REC61A-44311-00	REC93210-86M38	REC6E5-44366-00	REC90280-04M05	REC61A-W0078-A1
175	6G5	1984-91	REC6E5-44352-01	REC6E5-44322-00	REC6E5-44323-00-40	REC6E5-44311-00	REC93210-86M38	REC6E5-44366-00	REC90280-04M05	REC6G5-W0078-A1
175 BETO	6R3	1992-95	REC6E5-44352-01	REC61A-44322-02	REC6G5-44323-00	REC61A-44311-00	REC93210-86M38	REC6E5-44366-00	REC90280-04M05	REC61A-W0078-A1
175 DETO	64D	1996	REC6E5-44352-01	REC61A-44322-02	REC6G5-44323-00	REC61A-44311-00	REC93210-86M38	REC6E5-44366-00	REC90280-04M05	REC61A-W0078-A1
P175	62H	1994-99	REC6E5-44352-01	REC61A-44322-02	REC6G5-44323-00	REC61A-44311-00	REC93210-86M38	REC6E5-44366-00	REC90280-04M05	REC61A-W0078-A1
VZ175		2001-09	REC6E5-44352-01	REC61A-44322-02	REC6G5-44323-00	REC61A-44311-00	REC93210-86M38	REC6E5-44366-00	REC90280-04M05	REC61A-W0078-A1
Z175		2001-05	REC6E5-44352-01	REC61A-44322-02	REC6G5-44323-00	REC61A-44311-00	REC93210-86M38	REC6E5-44366-00	REC90280-04M05	REC61A-W0078-A1
200G	64M	1996	REC6E5-44352-01	REC61A-44322-02	REC6G5-44323-00	REC61A-44311-00	REC93210-86M38	REC6E5-44366-00	REC90280-04M05	REC61A-W0078-A1
200 FETO	64E	1996	REC6E5-44352-01	REC61A-44322-02	REC6G5-44323-00	REC61A-44311-00	REC93210-86M38	REC6E5-44366-00	REC90280-04M05	REC61A-W0078-A1
200 CETO	61H	1992-93	REC6E5-44352-01	REC61A-44322-02	REC6G5-44323-00	REC61A-44311-00	REC93210-86M38	REC6E5-44366-00	REC90280-04M05	REC61A-W0078-A1
200	6G6/6R4	1984-91	REC6E5-44352-01	REC6E5-44322-00	REC6E5-44323-00-40	REC6E5-44311-00	REC93210-86M38	REC6E5-44366-00	REC90280-04M05	REC6G5-W0078-A1
200 BETO	6R4	1992-99	REC6E5-44352-01	REC61A-44322-02		REC61A-44311-00	REC93210-86M38	REC6E5-44366-00	REC90280-04M05	REC61A-W0078-A1
L200BETO	6R1	1992-95	REC6E5-44352-01	REC6E5-44322-00	REC6E5-44323-00-40	REC6E5-44311-00	REC93210-86M38	REC6E5-44366-00	REC90280-04M05	REC6G5-W0078-A1
L200 FETO	64H	1992-99	REC6E5-44352-01	REC61A-44322-02	REC6G5-44323-00	REC61A-44311-00	REC93210-86M38	REC6E5-44366-00	REC90280-04M05	REC61A-W0078-A1
LX200		1999-02	REC6E5-44352-01	REC61A-44322-02	REC6G5-44323-00	REC61A-44311-00	REC93210-86M38	REC6E5-44366-00	REC90280-04M05	REC61A-W0078-A1
P200		1991-99	REC6E5-44352-01	REC61A-44322-02	REC6G5-44323-00	REC61A-44311-00	REC93210-86M38	REC6E5-44366-00	REC90280-04M05	REC61A-W0078-A1
SX200		1999-05	REC6E5-44352-01	REC61A-44322-02	REC6G5-44323-00	REC61A-44311-00	REC93210-86M38	REC6E5-44366-00	REC90280-04M05	REC61A-W0078-A1
V200		1998-99	REC6E5-44352-01	REC61A-44322-02	REC6G5-44323-00	REC61A-44311-00	REC93210-86M38	REC6E5-44366-00	REC90280-04M05	REC61A-W0078-A1
VZ200		2001-04	REC6E5-44352-01	REC61A-44322-02	REC6G5-44323-00	REC61A-44311-00	REC93210-86M38	REC6E5-44366-00	REC90280-04M05	REC61A-W0078-A1
VZ200		2005-09	REC6E5-44352-01	REC61A-44322-02		REC61A-44311-00	REC93210-86M38	REC6E5-44366-00	REC90280-04M05	REC60X-W0078-00
Z200/ LZ200		2000-10	REC6E5-44352-01	REC61A-44322-02	REC6G5-44323-00	REC61A-44311-00	REC93210-86M38	REC6E5-44366-00	REC90280-04M05	REC61A-W0078-A1
V6 Special	6G7	1984-86	REC6E5-44352-01	REC6E5-44322-00	REC6E5-44323-00-40	REC6E5-44311-00	REC93210-86M38	REC6E5-44366-00	REC90280-04M05	REC6G5-W0078-A1
V6 Excel	6K7	1987-89	REC6E5-44352-01	REC6E5-44322-00	REC6E5-44323-00-40	REC6E5-44311-00	REC93210-86M38	REC6E5-44366-00	REC90280-04M05	REC6G5-W0078-A1
L225C/ CETO	62K	1994-95	REC6E5-44352-01	REC61A-44322-02	REC6G5-44323-00	REC61A-44311-00	REC93210-86M38	REC6E5-44366-00	REC90280-04M05	REC61A-W0078-A1
225 C	62J	1994-95	REC6E5-44352-01	REC61A-44322-02	REC6G5-44323-00	REC61A-44311-00	REC93210-86M38	REC6E5-44366-00	REC90280-04M05	REC61A-W0078-A1
225 DET / DETO	64F	1996	REC6E5-44352-01	REC61A-44322-02	REC6G5-44323-00	REC61A-44311-00	REC93210-86M38	REC6E5-44366-00	REC90280-04M05	REC61A-W0078-A1
225 BET / BETO	6R5	1991-95	REC6E5-44352-01	REC61A-44322-02	REC6G5-44323-00	REC61A-44311-00	REC93210-86M38	REC6E5-44366-00	REC90280-04M05	REC61A-W0078-A1
225 (2.6L)		1992-97	REC6E5-44352-01	REC61A-44322-02	REC6G5-44323-00	REC61A-44311-00	REC93210-86M38	REC6E5-44366-00	REC90280-04M05	REC61A-W0078-A1
225 L/S (3.1L)		1994-99	REC6E5-44352-01	REC61A-44322-02	REC6G5-44323-00	REC61A-44311-00	REC93210-86M38	REC6E5-44366-00	REC90280-04M05	REC61A-W0078-A1
LX225/ SX225		2000-03	REC6E5-44352-01	REC61A-44322-02	REC6G5-44323-00	REC61A-44311-00	REC93210-86M38	REC6E5-44366-00	REC90280-04M05	REC61A-W0078-A1
V225		1998-99	REC6E5-44352-01	REC61A-44322-02	REC6G5-44323-00	REC61A-44311-00	REC93210-86M38	REC6E5-44366-00	REC90280-04M05	REC61A-W0078-A1
VX225		2000-04	REC6E5-44352-01	REC61A-44322-02	REC6G5-44323-00	REC61A-44311-00	REC93210-86M38	REC6E5-44366-00	REC90280-04M05	REC61A-W0078-A1
VZ225		2003-09	REC6E5-44352-01	REC61A-44322-02		REC61A-44311-00	REC93210-86M38	REC6E5-44366-00	REC90280-04M05	REC60X-W0078-00
250AET/ AETO/ L250A	61A/61B	1990-96	REC6E5-44352-01	REC61A-44322-02	REC6G5-44323-00	REC61A-44311-00	REC93210-86M38	REC6E5-44366-00	REC90280-04M05	REC61A-W0078-A1
250 ETD	61A	1990	REC6E5-44352-01	REC61A-44322-02	REC6G5-44323-00	REC61A-44311-00	REC93210-86M38	REC6E5-44366-00	REC90280-04M05	REC61A-W0078-A1
250 B	61A	1995	REC6E5-44352-01	REC61A-44322-02	REC6G5-44323-00	REC61A-44311-00	REC93210-86M38	REC6E5-44366-00	REC90280-04M05	REC61A-W0078-A1
250/ L250		1990-96	REC6E5-44352-01	REC61A-44322-02	REC6G5-44323-00	REC61A-44311-00	REC93210-86M38	REC6E5-44366-00	REC90280-04M05	REC61A-W0078-A1
L250 /S250		1997-99	REC6E5-44352-01	REC61A-44322-02	REC6G5-44323-00	REC61A-44311-00	REC93210-86M38	REC6E5-44366-00	REC90280-04M05	REC61A-W0078-A1
VX250		2002-04	REC6E5-44352-01	REC61A-44322-02	REC6G5-44323-00	REC61A-44311-00	REC93210-86M38	REC6E5-44366-00	REC90280-04M05	REC61A-W0078-A1
VZ250		2003-09	REC6E5-44352-01	REC61A-44322-02		REC61A-44311-00	REC93210-86M38	REC6E5-44366-00	REC90280-04M05	REC60X-W0078-00
Z300 /LZ300		2006	REC6E5-44352-01	REC61A-44322-02		REC61A-44311-00	REC93210-86M38	REC6E5-44366-00	REC90280-04M05	REC61A-W0078-A1
VZ300		2004-09	REC6E5-44352-01	REC61A-44322-02		REC61A-44311-00	REC93210-86M38	REC6E5-44366-00	REC90280-04M05	REC60X-W0078-00
L/Z250DETOX	60V5/60W5	2007	REC6E5-44352-01	REC61A-44322-02	REC6P2-44323-00	REC61A-44311-00	REC93210-86M38	REC6E5-44365-00	REC90280-04M05	REC6P2-W0078-00
LZ/ Z300AETOX	6D04/6D14	2007	REC6E5-44352-01	REC61A-44322-02	REC6P2-44323-00	REC61A-44311-00	REC93210-86M38	REC6E5-44365-00	REC90280-04M05	REC6P2-W0078-00

ÁNODO ANODE ANODI ANODE

ZN	(KG)	AL	(KG)	OEM
CM15026	0,01	CM15026A	0,005	6E5-11325-00

100 -225 hp



ZN	(KG)	OEM
CM6U4-45251-00	0,27	6U4-45251-00

Serie TD



ZN	(KG)	AL	(KG)	OEM
CM6G5-45251-01	0,91	CM6G5-45251-01A	0,37	6G5-45251-01

MALTA 2/4, 3.5 HP
2B/3, A/4, A/5C, 150/200 HP



ZN	(KG)	AL	(KG)	OEM
CM68V-11325-01	0,07	CM68V-11325-01A	0,03	68V-11325-01



ZN	(KG)	AL	(KG)	OEM
CM68T-45251-00	0,10	CM68T-45251-00A	0,04	68T-45251-00



ZN	(KG)	AL	(KG)	OEM
CM6E5-45251-00	0,14	CM6E5-45251-00A	0,05	6E5-45251-00



ZN	(KG)	AL	(KG)	OEM
CM6E0-45251-11	0,10	CM6E0-45251-11A	0,04	6E0-45251-11-00

40 hp



ZN	(KG)	AL	(KG)	OEM
CM67C-45251-00	0,12	CM67C-45251-00A	0,047	67C-45251-00



ZN	(KG)	AL	(KG)	OEM
CM3082523	0,03	CM689-11325-00A	0, 0069	689-11325-00



ZN	(KG)	AL	(KG)	OEM
CM6H1-45251-02	0,49	CM6H1-45251-02A	0,20	6H14525102

TOP 700



ZN	(KG)	OEM
CM41106-ZW000	0,03	41106-ZW-000

2-25 HP



ZN	(KG)	AL	(KG)	OEM
CM688-45251-01	0,03	CM688-45251-01A	0,01	688-45251-01

Serie 2-115
60, 85, 115 HP



ZN	(KG)	AL	(KG)	OEM
CM6H1-45251-01	0,56	CM6H1-45251-01A	0,23	6H1-45251-01

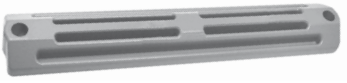

ZN	(KG)
CM825171	0,29

30-50 hp



ZN	(KG)	AL	(KG)	OEM
CM62Y-11325-00	0,02	CM62Y-11325-00A	0,01	62Y-11325-00

40-200 hp



RECAMBIOS MARINOS

ZN	(KG)	OEM
CM6G1-45251-03	0,17	6G1-45251-03 6GH-45251-00 6N0-WG525-00

6C - 6D - 8C



ZN	(KG)
CM42121	0,03

6 - 9.9 hp



ZN	(KG)	OEM
CM6E8-45251-00	0,06	6E8-45251-00

9.9 hp



ZN	(KG)	OEM
CM6E8-45251-01	0,15	6E8-45251-02

9.9 - 15 hp



ZN	(KG)	OEM
CM6G8-45251-01	0,20	6G8-45251-00

9.9 hp



ZN	(KG)	OEM
CM66M-45371-00	0,08	66M-45371-00

9.9 hp - 4T



ZN	(KG)	AL	(KG)	OEM
CM6L5-45251-02	0,06	CM6L5-45251-02A	0,03	6L5-45251-02

3,5 hp



ZN	(KG)	AL	(KG)	OEM
CM15008	0,014	CM15008A	0,006	66M-11325-00

9.9hp



ZN	(KG)	OEM
CM6G1-45251-02	0,03	6G1-45251-02

6 - 8 hp



ZN	(KG)	OEM
CM6U0-45251-00	1,5	6U0-45251-00

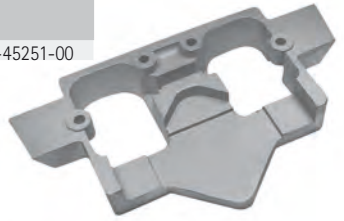

ZN	(KG)	OEM
CM6T4-45836-00	1,44	6T4-45836-00

V8



ZN	(KG)	OEM
CM6T5-45373-00	1,07	6T545373-00

130 - 260 hp



ZN	(KG)	OEM
CM67F-11325-00	0,06	67F-11325-00

80 - 100 hp



ZN	(KG)	OEM
CM63D-45251-01	0,54	63D-45251-01

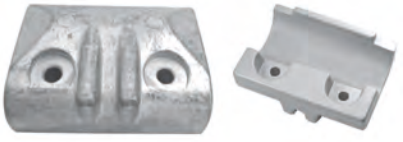

ZN	(KG)	AL	(KG)	OEM
CM6G8-11325-00	0,02	CM6G8-11325-00A	0,004	6G8-11325-00

2.5 - 9.0 hp



ZN	(KG)	OEM
CM6E5-45371-10	0,23	6E5-45371-10

60 - 225 hp



ZN	(KG)	AL	(KG)
CM82795M	0,19	CM82795MA	0,07

25, 30 hp

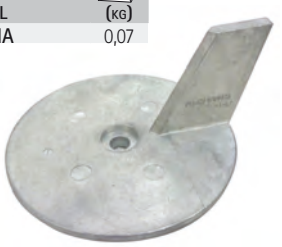

ZN	(KG)	AL	(KG)	OEM
CM67C-45371-00	0,21	CM67C-45371-00A	0,09	67C-45371-00

F25 - F40 - F50 - F60



ZN	(KG)	AL	(KG)	OEM
CM688-45371-02	0,48	CM688-45371-02A	0,19	688-45371-02

60 -90 hp



ZN	(KG)	AL	(KG)	OEM
CM85007	0,01	CM85007A	0,004	688-11325-00

25-90 hp



ZN	(KG)	AL	(KG)	OEM
CM679-45251-00	0,56	CM679-45251-00A	0,213	679-45251-00

55 hp



ZN	(KG)	AL	(KG)	OEM
CM61A-45371	0,63	CM61A-45371-00A	0,25	61A-45371-00

250 hp



ZN	(KG)	AL	(KG)	OEM
CM6J9-45371-01	0,50	CM6J9-45371-01A	0,20	6J9-45371-01

150, 200 hp



ZN	(KG)	AL	(KG)	OEM
CM61N-45251-01	0,26	CM61N-45251-01A	0,10	61N-45251-01

4T, 9.9,/15F, 25 hp



ZN	(KG)	AL	(KG)	OEM
CM6K1-45371-02	0,50	CM6K1-45371-02A	0,21	6J9-45371-02

150, 200 hp

CONTRAROTACIÓN
COUNTERROTATION
CONTRORotante
CONTRE ROTATION



ZN	(KG)	AL	(KG)	OEM
CM664-45371-01	0,28	CM664-45371-01A	0,11	664-45371-01A

20, 25, 30 hp



ZN	(KG)	AL	(KG)	OEM
CM69L-45371-00	0,52	CM69L-45371-00A	0,21	69L-45371-00



ZN	(KG)	OEM
CM6T5-45371-00	0,52	6T5-45371-00

130 - 160 hp



ZN	(KG)	AL	(KG)	OEM
REC6E5-45371-01	0,42	CM6E5-45371-01A	0,17	6E5-45371-01

115 - 225 HP (V-4 - V6)

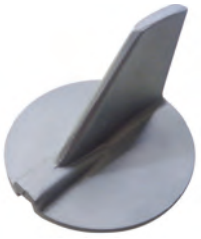

ZN	(KG)	AL	(KG)	OEM
CM6K1-45371-00	0,42	CM6K1-45371-00A	0,17	6K1-45371-00

115 - 225 HP (V-4 - V6)

CONTRAROTACIÓN
COUNTERROTATION
CONTRORotante
CONTRE ROTATION



new

ZN	(KG)	AL	(KG)	OEM
CM63P-11325-11	0,02	CM63P-11325-11A	0,008	63P-11325-11

150 - 300 hp



new

ZN	(KG)	AL	(KG)	OEM
CM67F-11325-01	0,044	CM67F-11325-01A	0,017	67F-11325-01

75 - 350 hp



new

ZN	(KG)	AL	(KG)	OEM
CM67F-45371-00	0,407	CM67F-45371-00A	0,156	67F-45371-00

50 - 225 hp



new

ZN	(KG)	AL	(KG)	OEM
CM6AW-45373-00	1,09	CM6AW-45373-00A	0,42	6AW-45373-00

300 - 350 hp



new

ZN	(KG)	AL	(KG)	OEM
CM6AW-45251-00	0,66	CM6AW-45251-00A	0,25	6AW-45251-00

200 - 350 hp



new

ZN	(KG)	AL	(KG)	OEM
CM6AW-45619-00	0,27	CM6AW-45619-00A	0,103	6AW-45619-00

300 - 350 hp

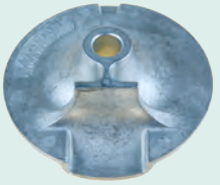

new

ZN	(KG)	AL	(KG)	OEM
CM6BL-11325-00	0,02	CM6BL-11325-00A	0,007	6BL-11325-00

BLOC
F20 / T,F25



new

ZN	(KG)	OEM
CM61A-11325-00	0,02	61A-11325-00

BLOC
V6



new

ZN	(KG)	AL	(KG)	OEM
CM63P-11325-01	0,022	CM63P-11325-01A	0,008	63P-11325-00 63P-11325-01

F150 - F350 (2004+)



new

ZN	(KG)	AL	(KG)	OEM
CM68T-11325-00	0,011	CM68T-11325-00A	0,004	68T-11325-00

BLOC
6 - 300 hp



YAMAHA

RECAMBIOS MARINOS

KITS DE ÁNODOS | ANODES KIT | KIT ANODI | KIT ANODES

AL	MG
CMY150KITA	CMY150KITM

150 - 200 hp



AL	MG
CMY200250KITA	CMY200250KITM

200 - 250 hp



AL	MG
CMY150CRKITA	CMY150CRKITM

150, 200 hp

CONTRAROTACIÓN
COUNTERROTATION
CONTROROTANTE
CONTRE ROTATION



AL	MG
CMYHP200300KITA	CMY200300KITM

200 - 300 hp



AL	MG
CMY300350KITA	CMY300350KITM

300 - 350 hp



AL	MG
CMY4060KITA	CMY4060KITM

4T
40 - 60 hp



AL	MG
CMY300350XPKITA	CMY300350XPKITM

300 - 350 hp



AL	MG
CMY6090KITA	CMY6090KITM

60 -90 hp



AL	MG
CMY4050KITA	CMY4050KITM

40 - 50 hp



AL	MG
CMY80100KITA	CMY80100KITM

80 - 10 0 hp



ZN	OEM	(KG)
TEN01109	677-45251-00	0,02

2 - 25 hp



ZN	OEM	(KG)
TEN01110	688-45251-01	0,04

60 - 85 - 115 hp



ZN	OEM	(KG)
TEN01111		0,210

Serie 2 - 115 hp
70 -85 hp



ZN	OEM	(KG)
TEN01165	63P-11325-21-00	0,03



ZN	OEM	(KG)
TEN01148	6G8-11325-00	0,01

2.5 - 9 hp



ZN	OEM	(KG)
TEN01149	62Y-11325-00	0,02

40- 200 hp



ZN	OEM	(KG)
TEN01150	6J8-11325-00	0,02

20- 25 hp



ZN	OEM	(KG)
TEN01168	61A-11325-00	0,02



ZN	OEM	(KG)
TEN01132	67C-45251-00 63D-45251-10	0,12

T25, F30, F40, F50, F60, hp



ZN	OEM	(KG)
TEN01142	68T-45251-00	0,10

F8C - 68T (2000) - 4T



ZN	OEM	(KG)
TEN01147	688-11325-00	0,01

25 - 90 hp



ZN	OEM	(KG)
TEN01152	6E5-11325-00	0,01

100 - 225 hp



ZN	OEM	(KG)
TEN01146	67F-11325-00	0,07

80 - 100 hp



ZN	OEM	(KG)
TEN01146-1	67F-11325-01	0,05

80 - 100 hp



ZN	OEM	(KG)
TEN01151	66M-11325-00	0,01

9.9 hp



ZN	(KG)	AL	(KG)	OEM
TEN01135	0,27	TEN01135A	0,11	61N-45251-01

4T - 9,9 - 15F - 25 hp



ZN	OEM	(KG)
TEN01137	6G8-45251-00	0,20

9.9 hp



ZN	OEM	(KG)
TEN01138	6AV-45251-00 6V3-45251-01	0,28

TD



ZN	(KG)	AL	(KG)	OEM
TEN01123	0,10	TEN01123A	0,04	6E0-45251-11-00 65W-45251-00

40 hp



ZN	OEM	(KG)
TEN01105	6E5-45251-00	0,15

115 - 225 hp



ZN	OEM	(KG)
TEN01106	6E8-45251-00	0,045

9.9 hp



ZN	OEM	(KG)
TEN01116	6E8-45251-02	0,14

9.9 - 15 hp



ZN	OEM	(KG)
TEN01136	66M-45371-00	0,09

9.9 4T hp



ZN	OEM	(KG)
TEN01153	6E5-45371-00	0,337

60 - 225 hp



ZN	OEM	(KG)
TEN01118	6G1-45251-03	0,175

6C - 6D - 8C HP



ZN	OEM	(KG)
TEN01122	6T4-45836-00	1,49

V8



ZN	(KG)	AL	(KG)	OEM
TEN01100	0,21	TEN01100A	0,08	664-45371-01

20 - 25 - 30 HP



ZN	(KG)	AL	(KG)	OEM
TEN01101	0,46	TEN01101A	0,17	679-45371-00

55 HP 10x1,25



ZN	OEM	(KG)
TEN01102		0,62

55 HP 10x1,25



ZN	(KG)	AL	(KG)	OEM
TEN01103	0,39	TEN01103A	0,15	6L6-45371-00

115 - 225 HP
V4 - V6



ZN	(KG)	AL	(KG)	OEM
TEN01104	0,43	TEN01104A	0,17	688-45371-02

60 - 90 hp

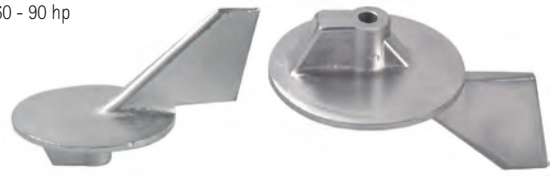

ZN	OEM	(KG)
TEN01119	6T5-45371-00	0,58

130 - 205 - 230 - 260 hp



ZN	OEM	(KG)
TEN01131	63D-45251-00 63D-45251-01	0,57

H.C. 48



ZN	(KG)	AL	(KG)	OEM
TEN01124	0,68	TEN01124AL	0,27	61A-45371-00

250A hp



ZN	(KG)	AL	(KG)	OEM
TEN01154	0,69	TEN01154AL	0,69	6AH-45251-00



ZN	OEM	(KG)
TEN01130		0,27

25 - 30 hp



ZN	OEM	(KG)
TEN01129	6E5-45251-00	0,24

75 HP - XR6



ZN		(KG)	AL	(KG)	OEM
TEN01133	DX220	0,63	TEN01133AL	0,26	6J9-45371-01
TEN01134	SX220	0,63			6K1-45371-02

150 - 200 HP



ZN	OEM	(KG)
TEN01157	6U0-45251-00	1,50

TD

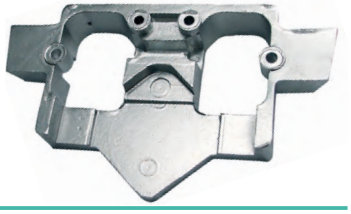

ZN	OEM	(KG)
TEN01140	67F-45371-00	0,40

80 - 100 HP 4T



ZN	OEM	(KG)
TEN01107		0,03

9.9 hp



ZN	(KG)	AL	(KG)	OEM
TEN01141	0,22	TEN01141AL	0,09	67F-45371-00

F40 - F50 - F60 4T

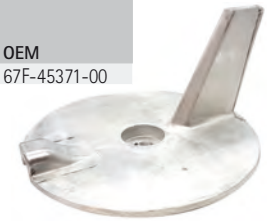

ZN	OEM	(KG)
TEN01108	6G1-45251-02	0,04

6 - 8 hp



ZN	OEM	(KG)
TEN01143	6J9-45371-00	0,56

150 - 225 HP



ZN	OEM	(KG)
TEN01169	6AW-45619-00	0,30



ZN	(KG)	AL	(KG)	OEM
TEN01155	1,05	TEN01155AL	0,4	6AW-45373-00



ZN	OEM	(KG)
TEN01158	6U4-45373-00	0,33



ZN	OEM	(KG)
TEN01117	6L5-45251-02	0,07

Malta 3,5 HP
+ 2B - 3A - 4A - 5C



ZN	OEM	Ø (mm)	(KG)
TEN01127	676-45251-00	20	0,02
TEN01128	682-45251-00	24	0,02



ZN	OEM	(KG)
TEN01161	6BL-11325-00	0,02



ZN	OEM	(KG)
TEN01163	68T-11325-00	0,02



ZN	(KG)	AL	(KG)	OEM
TEN01112	0,90	TEN01112AL	0,36	6G5-45251-01 6G5-45251-02



ZN	OEM	(KG)
TEN01113	6H1-45251-03	0,55

60 - 90 hp



ZN	OEM	(KG)
TEN01112-1	6AW-45251	0,65

200 - 350 hp

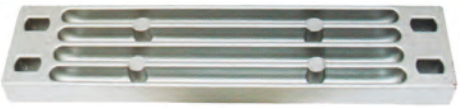

ZN	OEM	(KG)
TEN01162	682-11325-00	0,02



ZN	OEM	(KG)
TEN01164	63P-11325-11-00	0,02



ZN	OEM	(KG)
TEN01166	676-11325-00	0,03



ZN	OEM	(KG)
TEN01167	63P-11325-01-00	0,02

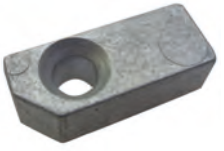

ZN	(KG)	AL	(KG)	OEM
TEN01115	0,46	TEN01115AL	0,18	6H1-45251-02

TOP 700



ZN	OEM	(KG)
TEN01125	6H1-45251-01	1,20

150 - 200 hp



ZN	OEM	(KG)
TEN01120	6T5-45373-00	0,77

130 - 205 - 230 - 260 hp



RECAMBIOS MARINOS

ZN	OEM	(KG)
TEN01126		0,29

30 - 40 hp



ZN	OEM	(KG)
TEN01159	6U4-45251-00	0,60



ZN	OEM	(KG)
TEN01121	689-11325-00	0,02

W30 - W8 25/2/3 hp



ZN	OEM	(KG)
TEN01160T	N51-11325-01	0,60



ZN	(KG)	AL	(KG)	OEM
TEN01156	0,03	TEN01156AL	0,02	68V-11325-02



ZN	(KG)	AL	(KG)	OEM
TEN01156-1	0,07	TEN01156/1AL	0,03	68V-11325-01



ZN	OEM	(KG)	Ø (mm)	(mm)	
TEN01114		0,09	20	39	M8



ZN	OEM	(KG)
TEN01139	6T5-45251-00	0,35



new

ZN	OEM	(KG)	Ø (mm)	(mm)
TEN01170	6AW-1132S-00	0,035	14	40
TEN01171	6AQ-1132N-00	0,030	14	38

300 - 350 hp



new

ZN	OEM	(KG)	Ø (mm)	(mm)
TEN01172	6AW-1132R-00	0,022	16	20

300 - 350 hp



new

ZN	OEM	(KG)	Ø (mm)	(mm)
TEN01173	6AW-1132L-00	0,026	19	15

300 - 350 hp



new

ZN	OEM	(KG)
TEN01174	6AW-1132U-00	0,06

300 - 350 hp

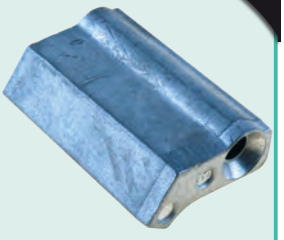

new

ZN	OEM	(KG)
TEN01175	6AW-1132T-00	0,06

300 - 350 hp

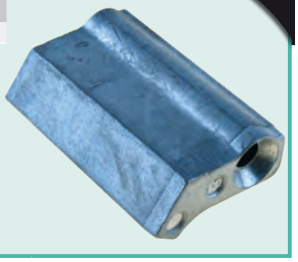

new

ZN	OEM	(KG)
TEN01176	6AW-1132M-00	0,12

300 - 350 hp



new

ZN	OEM	(KG)
TEN01177	6AW-1132P-00	0,034

300 - 350 hp



ZN	OEM	(KG)
TEN01145	69L-45371-00	0,66



ZN	(KG)	AL	(KG)	OEM
TEN01144	0,41	TEN01144AL		6K1-45371-00



KITS DE ÁNODOS — ANODES KIT — KIT DE ANODI — KIT ANODES

new

ZN
TENKITYAMAHA150-200

150 - 200 hp



new

ZN
TENKITYAMAHA200-300

200 - 300 hp



new

ZN
TENKITYAMAHA150-200C

150, 200 hp

CONTRAROTACIÓN
COUNTERROTATION
CONTROROTANTE
CONTRE ROTATION



new

ZN
TENKITYAMAHA40-60

40 - 60 hp



new

ZN
TENKITYAMAHA200-250

200 - 250 hp



new

ZN
TENKITYAMAHA60-90

60 - 90 hp



TAPA DE ÁNODO (66M) — COVER ANODE (66M) — COPERCHIO ANODO (66M) — COUVERCLE DU ANODE (66M)

new

REF	OEM
PAF15-07010011	66M-11327-00-94

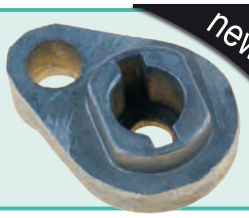

GUÍA DE ÁNODOS | ANODES APPLICATION | GUIDA ANODI | GUIDE DES ANODES

	OEM	TECNOSEAL ZN	TECNOSEAL AL	CANADA METAL ZN	CANADA METAL AL
CILINDRO | CYLINDER | CILINDRO | MOTEURS					
F2.5A, 2B, 3A, F4A, 4A, 5C (1989+), F4B, F5A, F6C	6L5-45251-03	TEN01117		CM6L5-45251-02	CM6L5-45251-02A
4A, 5C (-1989), F8A/B, F9.9A/B	677-45251-00	TEN01109		CM43107M	
4A, 5C, F8A/B/, 6C/D, 8C, F9.9A/B(1989+), 9.9D, 15/	6E0-45251-12	TEN01123	TEN01123AL	CM6E0-45251-11	CM6E0-45251-11A
6C/D, 8C (1990+)	6GH-45251-00	TEN01118		CM6G1-45251-03	
6C/D, 8C (-1989)	6N0-WG525-00	TEN01108		CM6G1-45251-02	
F6A/B, F8C, F9.9F, F9.9J	68T-45251-00	TEN01142		CM68T-45251-00	CM68T-45251-00A
F8A/B, 9.9D, F9.9B, 15D, F9.9A(-1994)	6E8-45251-02	TEN01116		CM6E8-45251-01	
F9.9A, FT9.9A (1994+)	6G8-45251-01	TEN01137		CM6G8-45251-01	
FT8, 9.9F, F9.9C, FT9.9D, FT9.9G, FT9.9L, 15F, F15A, F20A, F25A, 25B/V, F25D, 30G/H, 40V/X,F30A, F40A/B/C, F50A/F, 50H, FT25B/C (2000+)	61N-45251-01	TEN01135	TEN01135AL	CM61N-45251-01	CM61N-45251-01A
F15C, F20B	6AH-45251-00	TEN01154	TEN01154AL		
FT25F, F30B, F40F, F60A/C, FT60B, 40V/X, 50H, F40A, F50A/B(-1999), F50H, F60F	67C-45251-00	TEN01132		CM67C-45251-00	
F25G	6G8-45251-01	TEN01148		CM6G8-11325-00	
F50H, F60F, FT50J, FT60G	65W-45251-00	TEN01123	TEN01123AL	CM6E0-45251-11	CM6E0-45251-11A
F(L)300A, F(L)350A	6AW-45373-00	TEN01155	TEN01155AL	CM6AW-45373-00	CM6AW-45373-00A
TRIM					
F9.9C, F15A	66M-45371-00	TEN01136		CM66M-45371-00	
40Q, 50G, 55B, PRO50	679-45371-00	TEN01101	TEN01101AL		
20C/D, 25D/N, 30A/D, 40H/V/X, 50D/H, F40A, F45A, F50A(-2000)	664-45371-01	TEN01100	TEN01100AL	CM664-45371-01	CM664-45371-01A
FT25B/C, F30A, FT25F, F25G, F30B, F40F, F40A/B/C, F50A/F, F50H, F60A/C, F60F	67C-45371-00	TEN01141	TEN01141AL	CM67C-45371-00	CM67C-45371-00A
60F, 70B, 75A/C, PRO75, 80A, 85A, 90A, FT50B(-2000), FTC/G, FT50J, FT60B/D, FT60G, F70A, F80A/B, F100A/D	67F-45371-00	TEN01104	TEN01104AL	CM688-45371-02	CM688-45371-02A
100A, 115A/B/C, 130B, 140A/B, F100B/F, F115A/B, 150A, 175A, 200A, PROV100	6E5-45371-01	TEN01103	TEN01103AL	REC6E5-45371-01	CM6E5-45371-01A
150A, 175A, 200A(1998+), 150C/F, 175B/D, 200B/F/G, 225A/B/D/F, PROV200, F150A, Z150P/Q, Z175G/H, Z200N, F200F, F(L)200G	6J9-45371-01	TEN01133	TEN01133AL	CM6J9-45371-01	CM6J9-45371-01A
150A, 175A, 200A	6K1-45371-00	TEN01144	TEN01144AL	CM6K1-45371-00	CM6K1-45371-00A
LF150A, L150C/F, L200B/F, LZ150P, LZ200N	6K1-45371-02	TEN01134		CM6K1-45371-02	CM6K1-45371-02A
FL115A, FL115B, L130B, L140B	6L6-45371-00	TEN01103		REC6E5-45371-01	CM6E5-45371-01A
(L)225C/G, (L)250A/B, F(L)200A, F(L)200C, F(L)225A, F(L)225B, F(L)250A, F(L)250B, F(L)225F, F(L)250C, F(L)300B	61A-45371-00	TEN01124	TEN01124AL	CM61A-45371	CM61A-45371-00A
Z200P, (L)Z250D/F, (L)Z300A	69L-45371-00	TEN01145		CM69L-45371-00	CM69L-45371-00A
BRACKET					
FT8D, FT9.9D, F15A/C, F20A/B, F25A/G(PT model), FT25B, F30A, 30D, F40B/C, 40X/V, FT50C, 50H, F60A, FT60B, F70A	65W-45251-00	TEN01123	TEN01123AL	CM6E0-45251-11	CM6E0-45251-11A
25B/Q, 40H, 50D/G, 55B, 60F, 70B, 75A/C, 80A, 85A, 90A, F80A/B, F100A/D, F(L)115B, PRO50/75 (1990+)	6H1-45251-03	TEN01115	TEN01115AL	CM6H1-45251-02	CM6H1-45251-02A
40H, 50D, 60F, 70B, 80A, 90A(1989+)	99999-03935	TEN01113		CM6H1-45251-01	
40H, 50D, 60F, 70B, 80A, 90A(-1989)	688-45251-01	TEN01110		CM688-45251-01	CM688-45251-01A
25B, FT25B, F30A, 40V, F40A/B, F45A, FT50A/B, 50G/H, PRO50, 55B, 60F, 70B	663-45251-00	TEN01110		CM688-45251-01	CM688-45251-01A
40V, F40A, F45A, 50H, F50A, FT50B	63D-45251-01	TEN01131		CM63D-45251-01	CM63D-45251-01A
115A, 140A, 150A, 175A, 200A, 220A	6E5-45251-00	TEN01105		CM6E5-45251-00	CM6E5-45251-00A
100A, 115B/C, F(L)115A, (L)130B, (L)140B	6G5-45251-02	TEN01112	TEN01112AL	CM6G5-45251-01	CM6G5-45251-01A
PROV100, 150, 200, Vmax	6AW-45251-00	TEN01112-1		CM6AW-45251-00	CM6AW-45251-00A
(L)F150A, (L)150A/C/F, 175A/B/D/F	6AW-45251-00	TEN01112-1		CM6AW-45251-00	CM6AW-45251-00A
(L)200A/B/F/G, (L)225A/B/C/D/G, (L)250A/B	6AW-45251-00	TEN01112-1		CM6AW-45251-00	CM6AW-45251-00A
(L)Z150P/Q, Z175G/H/(L), Z200N/P	6AW-45251-00	TEN01112-1		CM6AW-45251-00	CM6AW-45251-00A
Z250D/F, F(L)200A, F200B, F(L)200C	6AW-45251-00	TEN01112-1		CM6AW-45251-00	CM6AW-45251-00A
F(L)225A, F(L)225B, F225C, F(L)250A	6AW-45251-00	TEN01112-1		CM6AW-45251-00	CM6AW-45251-00A
F(L)250B, (L)Z300A, F(L)300A, F(L)350A	6AW-45251-00	TEN01112-1		CM6AW-45251-00	CM6AW-45251-00A
F(L)225F, F(L)250D, F(L)300B	6AW-45251-00	TEN01112-1		CM6AW-45251-00	CM6AW-45251-00A
F(L)200F, F(L)200G	6AW-45251-00	TEN01112-1		CM6AW-45251-00	CM6AW-45251-00A
F300A, F350A (V8)					
TAPA TERMOSTATO | THERMOSTAT COVER COPERCHIO TERMOSTATO | COUVERCLE DU THERMOSTAT	6AW-1132R-00	TEN01172			
PARA REGULADOR | FOR REGULATOR | PER REGOLATORE | POUR REGULATEUR	6E5-11325-00	TEN01152		CM15026	CM15026A
BLOQUE | BLOCK | BLOCCO | MOTEUR	6AW-1132P-00	TEN01177			
BLOQUE | BLOCK | BLOCCO | BLOQUE	63P-11325-01	TEN01167		CM63P-11325-01	
TAPA ESCAPE | EXHAUST COVER | COPERCHIO SCARICO | PLAQUE D'ECHAPPEMENT	6AW-1132M-00	TEN01176			
ESCAPE | EXHAUST | SCARICO | ECHAPPEMENT	99999-03946	TEN01171			
ESCAPE | EXHAUST | SCARICO | ECHAPPEMENT	6AW-1132L-00	TEN01173			
PLACA ESCAPE | EXHAUST PLATE | PIASTRA SCARICO | PLAQUE D'ECHAPPEMENT	6AW-1132T-00	TEN01175			
PLACA ESCAPE | EXHAUST PLATE | PIASTRA SCARICO | PLAQUE D'ECHAPPEMENT	6AW-1132S-00	TEN01170			
ANODO PLACA ESCAPE	63P-11325-11	TEN01164		CM63P-11325-11	
COLAS (DIESEL) | STERN DRIVE (DIESEL) | PIEDI (DIESEL) | EMBASE (DIESEL)					
Intermedio | Intermediate | Intermedio | Intermediaire - ME422	6U0-45251-00	TEN01157		CM6U0-45251-00	
TRP Drive (Trasero | Rear | Posteriore | Arrière) - ME422	6U4-45251-00	TEN01159		CM6U4-45251-00	
TRP Drive (Frontal | Front | Anteriore | Avant) - ME422	6U4-45373-00	TEN01158			

4T STROKES F2.5 AMH/MLH/MSH/MHA (2003+)

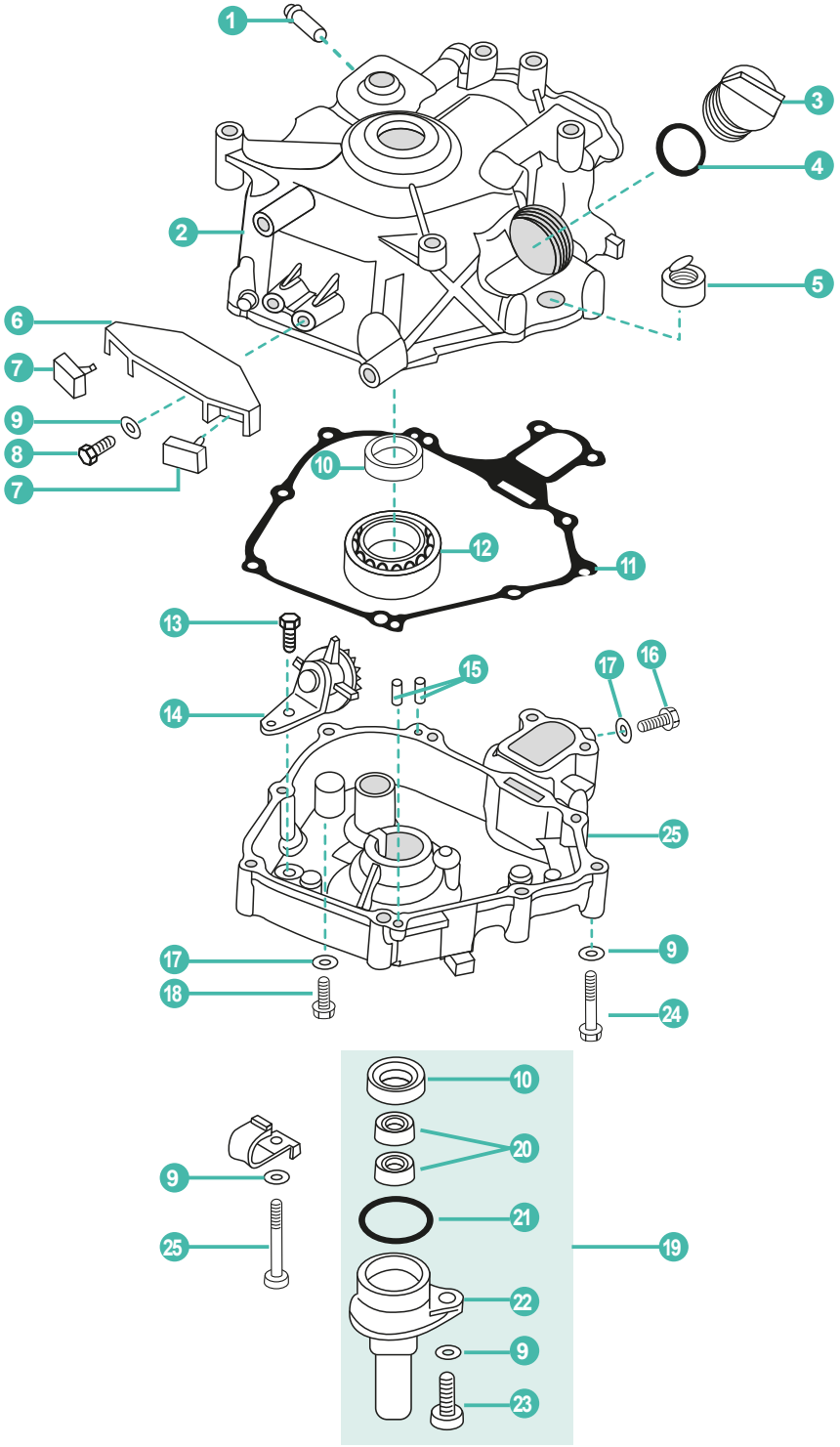

	REF	OEM					UN.
1	PAT15-04010202	6H1-14485-00	PIPA DE AGUA	PIPE, WATER	TUBO	RACCORD TUYAU D'EAU	1
2	PAF2.6-04010100	69M-E1311-00-1	CARCASA MOTOR	CRANK CASE	COPERCHIO MOTORE	VILEBREQUIN	1
3	PAF15-07050004	69M-E5363-00	TAPÓN ACEITE	PLUG, OIL	TAPPO OLIO	BOUCHON REMPLISSAGE D'HUILE	1
4	PAJASOF40431-025	93210-24M79	ARO TÓRICO	O-RING	O-RING	JOINT TORIQUE	1
5	PAF2.6-04010102	69M-15361-00	INDICADOR NIVEL	GAUGE, LEVEL	INDICATORE LIVELLO	JAUGE DE NIVEAU	1
6	PAF2.6-04000008	69M-G2743-00	SOPORTE MOTOR	BRACKET, DAMPER	SUPPORTO MOTORE	SUPPORT	1
7	PAF2.6-04000009	6G8-44532-00	GOMA SOPORTE	RUBBER BLOCK, DAMPER	GOMMA SUPPORTO	SILENT BLOC	2
8	PAGB/T5783-M6X20	97095-06020	TORNILLO	SCREW	VITE	VIS	2
9	PAGB/T97.1-6	92995-06600	ARANDELA	WASHER	RONDELLA	RONDELLE	11
10	PAF2.6-04010001	93102-20108	RETÉN	OIL SEAL	PARAOLIO	JOINT	2
11	PAF2.6-04000004	69M-11351-A0	JUNTA CÁRTER	CRANK CASE COMPLEX GASKET	GUARNIZIONE COPPA L'OLLIO	JOINT DE CARTER	1
12	PAGB/T276-62/22/P6	93306-272Y2	RODAMIENTO	BALL BEARING	CUSCINETTO	ROULEMENT À BILLE	1
13	PAGB/T5783-M6X12	95817-06012	TORNILLO	SCREW	VITE	VIS	1
14	PAF2.6-04050100	69M-E3102-00	PIÑÓN	GEAR UNIT ASSY	PIGNONE	PIGNON	1
15	PAF15-00000013	93604-12M07	PIN	PIN	SPINOTTO	GOUPILLE FENDUE	2
16	PAGB/T5783-M8X14	97095-08014	TORNILLO	SCREW	VITE	VIS	1
17	PAF4-04000006	90201-08818-00	ARANDELA	WASHER	RONDELLA	RONDELLE	2
18	PAF4-04000001	90105-08M76	TORNILLO DRENAJE	BOLT, DISCHARGING OIL	VITE DRENAGGIO	VIS DE VIDANGE	1
19	PAF2.6-04060000	69M-E5396-00-5B	RETÉN Y CUERPO, COMPLETO	OIL SEAL SHELL ASSY	GUARNIZIONE E CORPO COMPLETO	LOGEMENT JOINT D'HUILE, COMPLÈTE	1
20	PAF2.6-04060002	93210-09004	RETÉN	OIL SEAL	PARAOLIO	JOINT	2
21	PAF4-04060002	93210-35537	ARO TÓRICO	O RING	O-RING	JOINT TORIQUE	1
22	PAF2.6-04060001	69M-E5396-00	CUERPO DEL RETÉN	SHELL, OIL SEAL	GUARNIZIONE CORPO	LOGEMENT JOINT D'HUILE	1
23	PAGB/T5783-M5X12	90465-08M99	TORNILLO	SCREW	VITE	VIS	1
24	PAGB/T5783-M5X12	97013-06045	TORNILLO	SCREW	VITE	VIS	8
25	PAF2.6-04050001	69M-E5111-00-1S	CARTER	CRANKCASE COVER	CARTER	CARTER	1



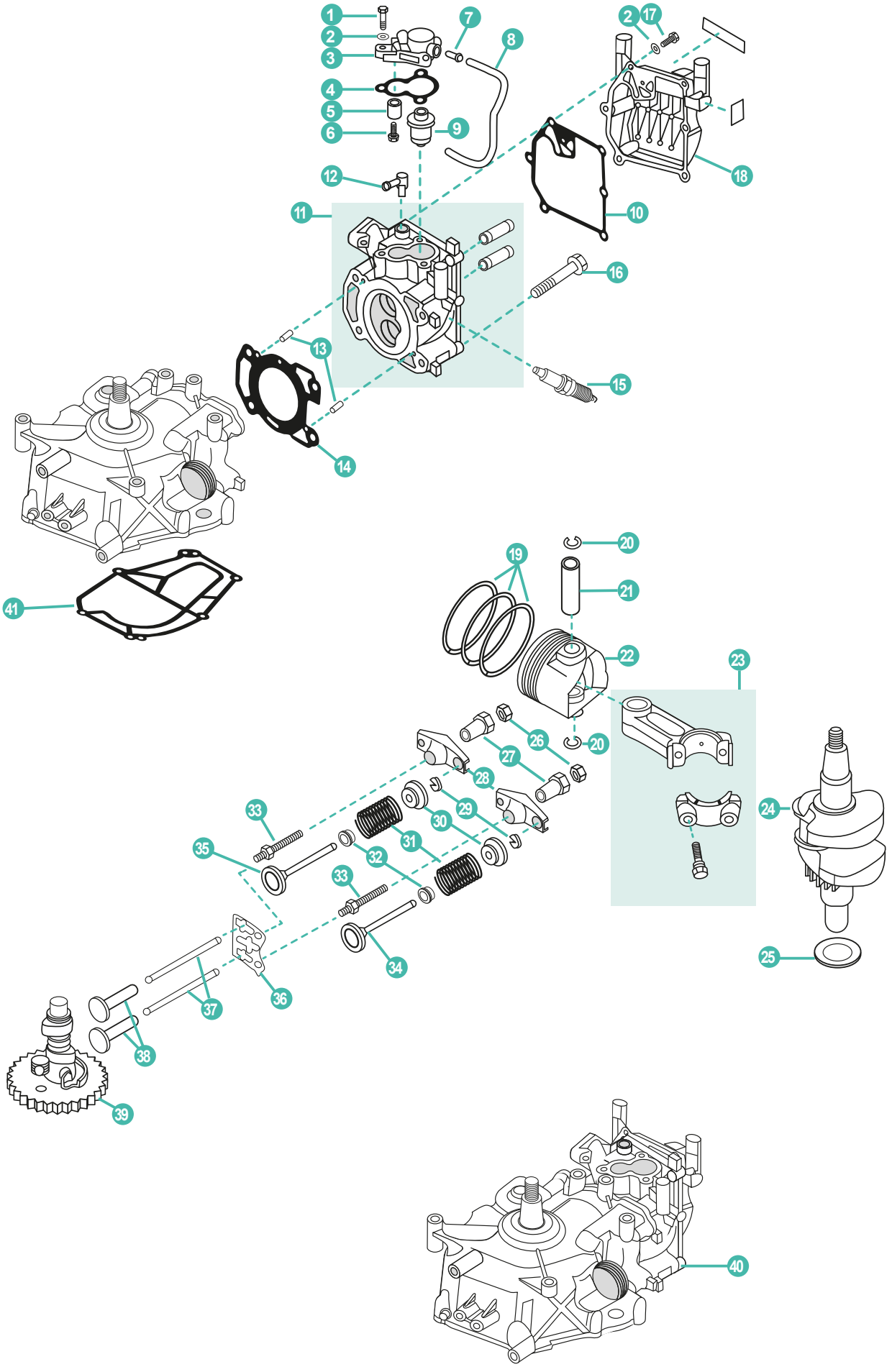
1
2
3
4
5
6
7
8
9
2
17
18
10
12
11
16
13
15
14
41
19
20
21
22
23
26
27
28
29
30
31
32
33
35
33
34
24
25
36
37
38
39
40

	REF	OEM					UN.
1	PAGB/T5783-M6X20	97095-06020	TORNILLO	SCREW	VITE	VIS	3
2	PAGB/T97.1-6	92995-06600	ARANDELA	WASHER	RONDELLA	RONDELLE	9
3	PAF2.6-04000501	69M-E2413-00-1S	TAPA TERMOSTATO	COVER, THERMOSTAT	COPERCHIO TERMOSTATO	COUVERCLE THERMOSTAT	1
4	PAF4-04000011	68D-E2414-A0	JUNTA TAPA TERMOSTATO	GASKET, THERMOSTAT COVER	GUARNIZIONE COPERCHIO TERMOSTATO	JOINT COUVERCLE DE THERMOSTAT	1
5	PAF4-04070003	68D-E1325-00	ÁNODO	ANODE	ANODO	ANODE	1
6	PAGB/T818-M5X25	97880-05025	TORNILLO	SCREW	VITE	VIS	1
7	PAF4-04010102	650-24378-00	PIPA	PIPE, JOINT	TUBO	RACCORD TUYAU D'EAU	1
8	PAF2.6-04000007	90445-09808	TUBO DE AGUA	WATER TUBE	TUBO DELL'ACQUA	DURITE D'EAU	1
9	REC6AH-12411-00	69M-12411-01	TERMOSTATO	THERMOSTAT	TERMOSTATO	THERMOSTAT	1
10	PAF2.6-04000005	69M-11193-A0	JUNTA TAPA BALANCINES	GASKET, CYLINDER COVER	GUARNIZIONE COPERCHIO PUNTERIE	JOINT DE CACHE CULBUTEUR	1
11	PAF2.6-04040100	69M-E1111-00-1S	CULATA COMPLETA	CYLINDER HEAD ASSY	TESTATA COMPLETA	CULASSE COMPLETE	1
12	PAF15-04000005	676-11372-00	NIPLE	NIPPLE	TUBO	RACCORD D'EAU	1
13	PAF15-00000013	93604-12M07	PIN	PIN, DOWEL	SPINOTTO	GOUPILLE FENDUE	2
14	PAF2.6-04000001	69M-11181-00	JUNTA CULATA	GASKET, CYLINDER HEAD	GUARNIZIONE TESTATA	JOINT DE CULASSE	1
15	NGKBR6HS	94702-00248	BUJÍA **F2.5A**	SPARK PLUG **F2.5A**	CANDELA **F2.5A**	BOUGIE **F2.5A**	1
	NGKCR6HSB	94702-00372	BUJÍA **F2.5B**	SPARK PLUG **F2.5B**	CANDELA **F2.5B**	BOUGIE **F2.5B**	1
16	PAF4-04000034	90105-08M36	TORNILLO	SCREW	VITE	VIS	4
17	PAGB/T5783-M6X16	90105-06039	TORNILLO	SCREW	VITE	VIS	6
18	PAF2.6-04000006	69M-E1191-00-1S	TAPA BALANCINES	COVER, CYLINDER HEAD	COPERCHIO PUNTERIE	CACHE CULBUTEUR	1
19	REC69M-E1603-01	69M-E1603-01	KIT SEGMENTOS	PISTON RING KIT	KIT FASCIA	KIT DE SEGMENTS	1
20	PAF2.6-04020006	93450-13130	CIRCLIP	CIRCLIP	CIRCLIP	CIRCLIP	2
21	PAF2.6-04020005	69M-E1633-00	PIN, PISTÓN	PIN, PISTON	SPINOTTO PISTONE	AXE DE PISTON	1
22	PAF2.6-04020001	69M-E1631-01-96	PISTÓN	PISTON	PISTONE	PISTON	1
23	PAF2.6-04020100	69M-11650-00	BIELA	ROD, CONNECTING	BIELLA	BIELLE	1
24	PAF2.6-04030000	69M-11400-00	CIGÜEÑAL	CRANK ASSY	ALBERO MOTORE	VILEBREQUIN	1
25	PAF2.6-04000003	90201-23008	ARANDELA	WASHER	RONDELLA	RONDELLE	1
26	PA166F-010011	7FK-12158-00	TUERCA	LOCK NUT	DADO	ÉCROU	2
27	PA166F-010010	7FK-12165-00	TUERCA BALANCÍN	PIVOT, ROCKER ARM	DADO BILANCERE	PIVOT CULBUTEUR	2
28	PA166F-010009	67D-12151-00	BALANCÍN	ARM, VALVE ROCKER	BILANCERE	CULBUTEUR	2
29	PAF8-05030007	7NJ-12118-00	SEGURO DE VÁLVULA	CLAMP, VALVE	BLOCCAGGIO DI VALVOLA	CLAVETTE DE SOUPAPE	2
30	PAF8-05030006	7NJ-12117-00	RETÉN DE RESORTE	SPRING, VALVE RETAINER	VALVOLA DI RITEGNO	JOINT DE RESSORT	2
31	PAF4-04080008	68D-E2113-00	MUELLE DE VÁLVULA	SPRING, VALVE STEM	MOLLA DI VALVOLA	RESSORT DE SOUPAPE	2
32	PA166F-010003	51Y-12119-00	RETÉN DE VÁLVULA	SEAT, VALVE STEM	TENUTA	JOINT QUEUE DE SOUPAPE	2
33	PA166F-010008	67D-12157-00	TORNILLO BALANCÍN	BOLT, ROCKER ARM	VITE PUNTERIE	VIS DE BRAS A BASCULE	2
34	PA166F-010001	67D-12111-00	VÁLVULA ADMISIÓN	VALVE, INTAKE	VALVOLA ASPIRAZIONE	SOUPAPE D ADMISSION	1
35	PA166F-010002	67D-12121-00	VÁLVULA ESCAPE	VALVE, EXHAUST	VALVOLA SCARICO	SOUPAPE D'ECHAPPEMENT	1
36	PAF2.6-04040001	69M-E2155-00	PLETINA EMPUJADORES	PLATE, PUSH ROD	PIASTRA, ASTA DI SPINTA	PLAQUE DE POUSSOIRS	1
37	PAF2.6-04000002	69M-12154-00	VARILLA EMPUJADOR	ROD, VALVE PUSH	ASTICELLA DI SPINTA	TIGE DE CULBUTEUR	2
38	PA166F-000001	JA9-12153-00	EMPUJADOR	LIFTER, VALVE	ASTA	POUSSOIR	2
39	PAF2.6-04000100	69M-12170-01	ÁRBOL DE LEVAS	CAMSHAFT ASSY	ALBERO A CAMME	ARBRE À CAMES	1
40	POWERHEAD2.6	69M-WE0090-01-1S	MOTOR	POWER HEAD	MOTORE	TÊTE MOTRICE	1
41	PAF2.6-00000003	69M-45113-A0	JUNTA BASE MOTOR	GASKET ENGINE	GUARNIZIONE BASE MOTORE	JOINT MOTEUR	1

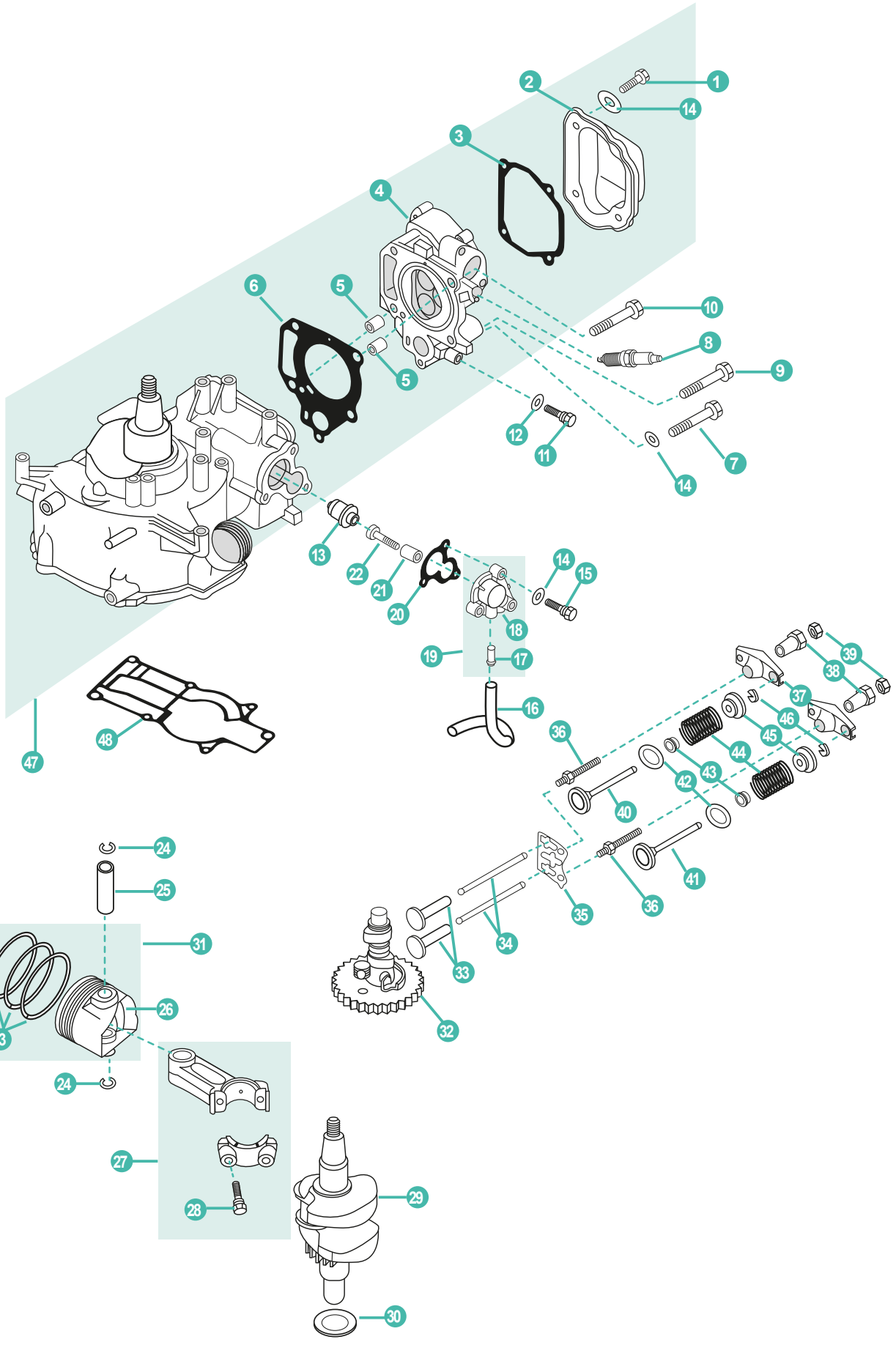
1
2
3
4
5
6
7
8
9
10
11
12
13
14
15
16
17
18
19
20
21
22
23
24
25
26
27
28
29
30
31
32
33
34
35
36
37
38
39
40
41
42
43
44
45
46
47
48

	REF	OEM					UN.
1	PAGB/T5783-M6X16	90105-06M14	TORNILLO	SCREW	VITE	VIS	4
2	PAF4-04000018	67D-11191-00	TAPA BALANCINES	COVER, CYLINDER HEAD	COPERCHIO PUNTERIE	CACHE CULBUTEUR	1
3	PAF4-04000017	68D-E1193-A0	JUNTA TAPA	GASKET, COVER	GAURNIZIONE COPERCHIO	JOINT COUVERCLE	1
4	PAF4-04080101	68D-E1111-10-1S	CULATA	CYLINDER, HEAD	TESTATA	CULASSE	1
5	PAF4-04000003	99510-10114	PIN	PIN, HOLLOW	SPINOTTO	GOUPILLE FENDUE	2
6	PAF4-04000014	67D-11181-A0	JUNTA CULATA	GASKET, CYLINDER HEAD	GUARNIZIONE TESTATA	JOINT DE CULASSE	1
7	PAGB/T5782-M6X45	90105-06M25	TORNILLO	SCREW	VITE	VIS	1
8	NGKBPR7HS	94702-00248	BUJÍA	SPARK PLUG	CANDELA	BOUGIE	1
9	PAF4-04000034	90105-08M36-00	TORNILLO	SCREW	VITE	VIS	3
10	PAF4-04000033	90105-08046-00	TORNILLO	SCREW	VITE	VIS	1
11	PAGB/T5783-M8X14	97095-08014-00	TORNILLO	SCREW	VITE	VIS	1
12	PAF4-04000006	90430-08800-00	ARANDELA	WASHER, PLATE	RONDELLA	RONDELLE	1
13	REC6AH-12411-00	69M-12411-01	TERMOSTATO	TEHRMOSTAT	TERMOSTATO	THERMOSTAT	1
14	PAGB/T97.1-6	92995-06600	ARANDELA	WASHER, PLATE	RONDELLA	RONDELLE	8
15	PAGB/T5783-M6X20	97095-06020-00	TORNILLO	SCREW	VITE	VIS	3
16	PAF4-04000012	90445-09807	TUBO	PIPE, RETURN	TUBO	DURITE D'EAU	1
17	PAF4-04010102	650-24378-00	PIPA DE AGUA	PIPE, WATER	TUBO	RACCORD TUYAU D'EAU	1
18	PAF4-04070001	67D-12413-00-1S	TAPA TERMOSTATO	COVER, THERMOSTAT	COPERCHIO TERMOSTATO	COUVERCLE THERMOSTAT	1
19	PAF4-04070100	68D-E2413-001S	TAPA TERMOSTATO COMPLETA	COVER ADN SPLIE WATER ASSY	TAPPO TERMOSTATO COMPLETO	COUVERCLE DE THERMOSTAT COMPLET	1
20	PAF4-04000011	68D-E2414-A0	JUNTA TAPA TERMOSTATO	GASKET, THERMOSTAT	GUARNIZIONE COPERCHIO TERMOSTATO	JOINT COUVERCLE DE THERMOSTAT	1
21	PAF4-04070003	68D-E1325-00	ÁNODO	ANODE	ANODO	ANODE	1
22	PAGB/T818-M5X25	97880-05025-00	TORNILLO	SCREW, PANHEAD	VITE	BOULON	1
23	REC68D-E1603-00	68D-E1603-00	KIT SEGMENTOS DE PISTÓN	PISTON RING KIT	KIT FASCIA PISTONE	KIT DE SEGMENTS	1
24	PAF4-04020006	93450-14088	CIRCLIP	CIRCLIP	CIRCLIP	CIRCLIP	2
25	PAF4-04020005	68D-E1633-00	PIN, PISTÓN	PIN, PISTON	SPINOTTO PISTONE	AXE DE PISTON	1
26	PAF4-04020001	68D-E1631-00-96	PISTÓN	PISTON	PISTONE	PISTON	1
27	PAF4-04020100	67D-11650-00	BIELA	ROD, CONNECTING	BIELLA	BIELLE	1
28	PAF4-04020103	67D-11654-00	TORNILLO	SCREW	VITE	VIS	2
29	PAF4-04030000	67D-11400-00	CIGÜEÑAL	CRANK ASSY	ALBERO MOTORE	VILEBREQUIN	1
30	PAF4-04000004	90201-266P2	ARANDELA	WASHER, PLATE	RONDELLA	RONDELLE	1
31	PAF4-04020200	68D-E1631-00-96	PISTÓN	PISTON ASSY	PISTONE	PISTON	1
32	PAF4-04040000	68D-E2170-00	ÁRBOL DE LEVAS	CAMSHAFT ASSY	ALBERO A CAMME	ARBRE À CAMES	1
33	PA166F-000001	JA9-12153-00	EMPUJADOR DE VÁLVULA	LIFTER, VALVE PUSH	ALZA VALVOLA	POUSSOIR	2
34	PAF4-04000015	67D-12154-00	VARILLA EMPUJADOR DE VÁLVULA	ROD, VALVE PUSH	ASTA, ALZA VALVOLA	TIGE DE CULBUTEUR	2
35	PAF4-04080009	68D-E2155-00	PLETINA EMPUJADORES	PLATE, PUSH ROD	PIASTRA, ASTA DI SPINTA	PLAQUE DE POUSSOIRS	1
36	PA166F-010008	67D-12157-00	TORNILLO	SCREW	VITE	VIS	2
37	PA166F-010009	67D-12151-00	BALANCÍN	VALVE ROCKER	BILANCERE	CULBUTEUR	2
38	PA166F-010010	7FK-12165-00	TUERCA BALANCÍN	PIVOT, ROCKER ARM	DADO BILANCERE	ECROU DU CULBUTEUR	2
39	PA166F-010011	7FK-12158-00	TUERCA	LOCKNUT	DADO	ECROU	1
40	PAF4-04080005	67D-12111-00	VÁLVULA ADMISIÓN	VALVE, INTAKE	VALVOLA ASPIRAZIONE	SOUPAPE D ADMISSION	1
41	PAF4-04080006	67D-12121-00	VÁLVULA ESCAPE	VALVE, EXHAUST	VALVOLA SCARICO	SOUPAPE D'ECHAPPEMENT	1
42	PAF4-04080007	68T-12116-00	ARANDELA ASIENTO	SEAT, VALVE SPRING	RONDELLA BASAMENTO	SIEGE RESSORT DE SOUPAPE	2
43	PAPS2700.04.03	51Y-12119-00	RETÉN DE VÁLVULA	SEAT, VALVE STEM	GOMMINO VALVOLA	JOINT QUEUE DE SOUPAPE	2
44	PAF4-04080008	68D-E2113-00	MUELLE	SPRING, VALVE INNER	MOLLA	RESSORT DE SOUPAPE	2
45	PAF8-05030006	7NJ-12117-00	RETÉN RESORTE	SPRING, VALVE RETAINER	VALVOLA DI RITEGNO	JOINT DE RESSORT	2
46	PAF8-05030007	7NJ-12118-00	SEGURO DE VÁLVULA	CLAMP, VALVE	BLOCCAGGIO DI VALVOLA	CLAVETTE DE SOUPAPE	2
47	PAF4-04000000	680-WE090-11-15	MOTOR	POWER HEAD 4-5	MOTORE	TÊTE MOTRICE	1
48	PAF4-00000006	67D-45113-A0	JUNTA BASE MOTOR	GASKET ENGINE	GUARNIZIONE BASE MOTORE	JOINT MOTEUR	1

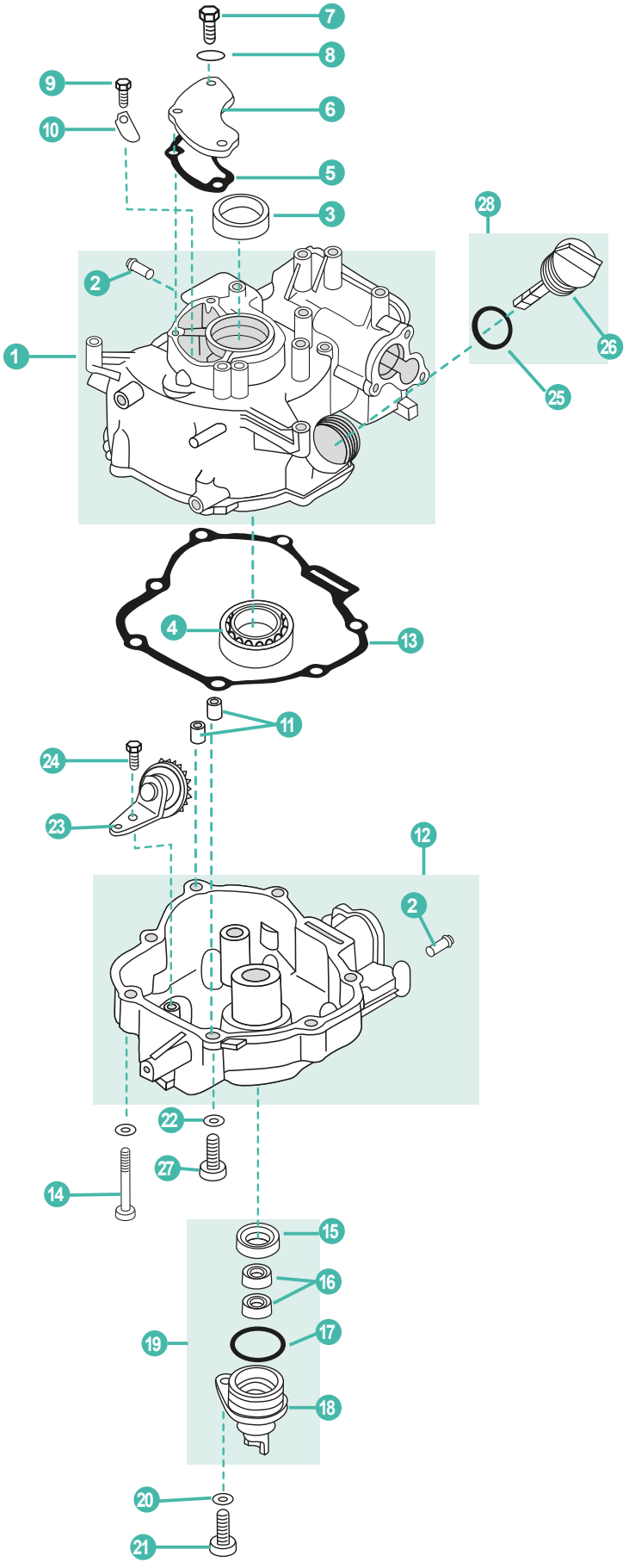
7
8
9
10
6
5
3
28
2
1
26
25
4
13
11
24
23
12
2
22
27
14
15
16
19
17
18
20
21

	REF	OEM					UN.
1	PAF4-04010100	68D-E1311-02-15	CARCASA DE MOTOR	CRANK CASE	COPERCHIO MOTORE	VILEBREQUIN	1
2	PAF4-04010102	650-24378-00	PIPA DE AGUA	PIPE, WATER	TUBO	RACCORD TUYAU D'EAU	2
3	PAF4-04010004	93102-25090	RETÉN	OIL SEAL	PARAOLIO	JOINT	1
4	PAGB/T276-6004C2	93306-205YD	RODAMIENTO	BALL BEARING	CUSCINETTO	ROULEMENT À BILLE	1
5	PAF4-04000009	68D-E1169-A0	JUNTA	BREATHER GASKET	GUARNIZIONE	JOINT	1
6	PAF4-04000010	68D-E1168-00	TAPA	COVER	COPERCHIO	COUVERCLE	1
7	PAGB/T5783-M6X14	90119-06M80-00	TORNILLO	SCREW	VITE	VIS	3
8	PAGB/T97.1-6	92885-06600	ARANDELA	WASHER	RONDELLA	RONDELLE	3
9	PAGB/T818-M4X6	98503-04066-00	TORNILLO	SCREW	VITE	VIS	1
10	PAF4-04010003	68D-E5346-00	VÁLVULA	VALVE	VALVOLA	SOUPAPE	1
11	PAF4-04000003	99510-10114	PIN	HOLLOWPIN	SPINOTTO	GOUPILLE FENDUE	2
12	PAF4-04050200	68D-E5111-00-1S	CARTER	COVER, CRANK CASE	CARTER	CARTER	1
13	PAF4-04000002	68D-11351-A0	JUNTA CARTER	CRANK CASE COMPLEX	GUARNIZIONE CARTER	JOINT DE CARTER	1
14	PAGB/T5787-1986	97575-08550-00	TORNILLO	SCREW	VITE	VIS	7
15	PAF2.6-04010001	93102-20108	RETÉN	OIL SEAL	PARAOLIO	JOINT	1
16	PAF4-04060004	93102-10004	RETÉN	OIL SEAL	PARAOLIO	JOINT	2
17	PAF4-04060002	93210-35537	TÓRICA	O-RING	O-RING	JOINT TORIQUE	1
18	PAF4-04060001	68D-E5396-00-5B	CUERPO DEL RETÉN	SHELL, OIL SEAL	GUARNIZIONE CORPO	LOGEMENT JOINT D'HUILE	1
19	PAF4-04060000	6EE-E5396-00-CA	CUERPO RETÉN COMPLETO	OIL SEAL, SHELL ASSY	CORPO GUARNIZIONE COMPLETO	LOGEMENT JOINT D'HUILE, COMPLET	1
20	PAGB/T97.1-8	92955-08600-00	ARANDELA	WASHER, PLATE	RONDELLA	RONDELLE	8
21	PAGB/T5783-M8X20	97095-08020-00	TORNILLO	BOLT, HEXAGON	VITE	BOULON	1
22	PAF4-04000006	90201-08818	ARANDELA	WASHER	RONDELLA	RONDELLE	1
23	PAF4-04050100	68D-E3102-00	PIÑÓN COMPELTO	GEAR UNIT ASSY	PIGNONE	PIGNON	1
24	PAGB/T5783-M6X12	95817-06012-00	TORNILLO	SCREW	VITE	VIS	1
25	PAF4-04000008	93210-24M79	TÓRICA	O-RING	O-RING	JOINT TORIQUE	1
26	PAF4-04000007	68D-E5362-00	TAPÓN MEDIDOR NIVEL	PLUG WITH DIPSTICK	TAPPO LIVELLO	BOUCHON AVEC JAUGE D'HUILE	1
27	PAF4-04000001	97095-08020-00	TORNILLO DRENAJE	BOLT, DISCHARGING OIL	VITE DRENAGGIO	VIS DE VIDANGE	1
28	PAF4-04000036	6EE-E5362-00	TAPÓN COMPLETO	PLUG ASSY	TAPPO COMPLETO	BOUCHON COMPLET	1



REF	OEM
REC67D-W0093-00	67D-W0093-00

P. 95



REC10W30U3
REC10W30U6
REC10W40U3
REC10W40U6

P. 40


10W30
10W40
P. 40
REC10W30U3
REC10W30U6
REC10W40U3
REC10W40U6

	REF	OEM					UN.
1	PAF6-04050100	6BX-E1111-00-1S	CULATA COMPLETA	CYLINDER HEAD ASSY	TESTATA COMPLETA	CULASSE COMPLETE	1
2	PAF4-04000034	90105-08M36	TORNILLO	SCREW	VITE	VIS	4
3	PAF4-04000003	99510-10114	PIN CENTRADOR	HOLLOW PIN	SPINOTTO DI CENTRAGGIO	PIN DE CENTRAGE	2
4	PAF6-04000002	6BX-11181-00	JUNTA CULATA	GASKET, CYLINDER HEAD	GUARNIZIONE TESTATA	JOINT DE CULASSE	1
5	PAF6-04000004	6BX-E1191-00-5B	TAPA CULATA DE CILINDRO	COVER CYLINDER HEAD	COPERCHIO TESTA CILINDRO	CACHE CULBUTEUR	1
6	PAF6-04000005	6BX-11356-00	RETÉN DE ACEITE	SEAL RING	PARAOLIO	JOINT CACHE CULBUTEUR	1
7	PAGB/T5783-M6X20	97095-06020	TORNILLO	SCREW	VITE	VIS	5
8	PAGB/T97.1-6	92995-06600	ARANDELA	WASHER	RONDELLA	RONDELLE	15
9	PAF15-07000031	66M-12411-01	TERMOSTATO	THERMOSTAT	TERMOSTATO	THERMOSTAT	1
10	PAF4-04070000	68D-E2413-00-1S	TAPA TERMOSTATO	COVER, THERMOSTAT	COPERCHIO TERMOSTATO	COUVERCLE THERMOSTAT	1
11	PAF4-04010102	650-24378-00	NIPLE	NIPPLE	RACCORDO	RACCORD	1
12	PAF4-04070003	68D-E1325-00	ÁNODO	ANODE	ANODO	ANODE	1
13	PAGB/T818-M5X25	97880-05025	TORNILLO	SCREW	VITE	VIS	1
14	PAF4-04000011	68D-E2414-A0	JUNTA TAPA TERMOSTATO	GASKET, THERMOSTAT COVER	GUARNIZIONE COPERCHIO TERMOSTATO	JOINT COUVERCLE DE THERMOSTAT	1
15	PAGB/T5783-M6X20	90119-06MA2	TORNILLO	SCREW	VITE	VIS	3
16	PAF6-04000020	6BX-F4323-00	TUBO	TUBE	TUBO	DURITE D'EAU	1
17	PAT36-04000023	90465-06M86	BRIDA	CLAMP	FLANGIA	COLLIER	1
18	PAF6-04000009	6G0-82519-00	CABLE MASA	WIRE LEAD	PORTA CAVO	CABLE	1
19	NGKCR6HSB	94702-00372	BUJÍA	SPARK PLUG	CANDELA	BOUGIE	1
20	PAF6-04030000	6BX-E2170-00	ÁRBOL DE LEVAS	CAMSHAFT ASSY	ALBERO A CAMME	ARBRE À CAMES	1
21	PAF6-04050001	6BX-12111-00	VÁLVULA ADMISIÓN	VALVE, INTAKE	VALVOLA ASPIRAZIONE	SOUPAPE D ADMISSION	1
22	PAF6-04050002	6AU-12121-00	VÁLVULA ESCAPE	VALVE, EXHAUST	VALVOLA SCARICO	SOUPAPE D'ECHAPPEMENT	1
23	PAF166-010003	51Y-12119-00	RETÉN DE ACEITE	SEAL RING	PARAOLIO	JOINT D'HUILE	2
24	PAF6-04050003	60R-12113-00	RESORTE DE VÁLVULA	SPRING, VALVE	MOLLA VALVOLA	RESSORT	2
25	PAF4-04080007	68T-12116-00	RETÉN RESORTE	SPRING, VALVE RETAINER	VALVOLA DI RITEGNO	JOINT DE RESSORT	2
26	PA166F-010009	67D-12151-00	BRAZO DE BALANCÍN	ARM, VALVE ROCKER	BILANCERE	CULBUTEUR	2
27	PA166F-010010	7FK-12165-00	TUERCA BALANCÍN	PIVOT, ROCKER ARM	DADO BILANCERE	PIVOT CULBUTEUR	2
28	PA166F-010011	7FK-12158-00	TUERCA	LOCK NUT	DADO	ÉCROU	2
29	PA166F-010008	67D-12157-00	PERNO	BOLT	PERNO	BOULON	2
30	PAF6-04050004	6BX-E2155-00	PLETINA EMPUJADORES	PLATE, PUSH ROD	PIASTRA, ASTA DI SPINTA	PLAQUE DE POUSSOIRS	1
31	PAF6-04000003	6BX-12154-00	VARILLA EMPUJADOR	ROD, VALVE PUSH	ASTICELLA DI SPINTA	TIGE DE CULBUTEUR	2
32	PA166F-000001	JA9-12153-00	EMPUJADOR DE VÁLVULA	LIFTER, VALVE PUSH	ALZA VALVOLA	POUSSOIR	2
33	PANTN6205C3	93306-205B2	RODAMIENTO	BALL BEARING	CUSCINETTO	ROULEMENT À BILLE	1
34	PAF6-04010004	6BX-E1168-00	CUBIERTA DE RESPIRADERO	OIL BAFFLE PLATE	DIAFRAMMA OLIO	JOINT DE CARTER D'HUILE	1
35	PAGB/T5783-M5X10	97013-05010	PERNO	BOLT	PERNO	BOULON	2
36	PAF6-04000001	6BX-11351-00	JUNTA BASE MOTOR	GASKET ENGINE	GUARNIZIONE BASE MOTORE	JOINT MOTEUR	1
37	PAF4-04000003	99510-10114	PIN CENTRADOR	HOLLOW PIN	SPINOTTO DI CENTRAGGIO	PIN DE CENTRAGE	2
38	PAF4-04010102	650-24378-00	PIPA DE AGUA	PIPE, WATER	TUBO	RACCORD TUYAU D'EAU	1
39	PAF15-04000005	676-11372-00	NIPLE DE MANGUERA	WATER NIPPLE	RACCORDO COMPLETO	RACCORD D'EAU	1
40	PAF4-04060001	68D-E5396-00-5B	CAJA DE SELLO DE ACEITE	SHELL, OIL SEAL	GUARNIZIONE CORPO OLIO	LOGEMENT JOINT D'HUILE	1
41	PAGB/T345.2-D32.5XD1	93210-35537	TÓRICA	O-RING	O-RING	JOINT TORIQUE	1
42	PAF2.6-04010001	93102-20108	RETÉN DE ACEITE	SEAL RING	PARAOLIO	JOINT SPI	1
43	PAF4-04060004	93102-10004	RETÉN DE ACEITE	SEAL RING	PARAOLIO	JOINT SPI	2
44	PAGB/T5783-M8X20	97095-08020	PERNO	BOLT	PERNO	BOULON	1
45	PAGB/T97.1-8	92995-08600	ARANDELA	WASHER	RONDELLA	RONDELLE	1
46	PAGB/T5783-M8X14	97095-08014	PERNO	BOLT	PERNO	BOULON	1
47	PAF4-04000006	90430-08800	JUNTA	GASKET	GUARNIZIONE	JOINT	1
48	PAF6-00000001	6BX-45113-00	JUNTA	GASKET	GUARNIZIONE	JOINT	1
49	PAF8-05030007	7NJ-12118-00	CLIP	CLIP	CLIP	CLIP	1
50	PAF4-04000010	68D-E5362-00	TAPÓN COMPLETO	PLUG ASSY	TAPPO COMPLETO	BOUCHON COMPLET	1

4T STROKES F6A/M/B • FT/T/F8C/M/D/P/E/F • F9.9F • FT9.9G • F9.9J • FT9.9L

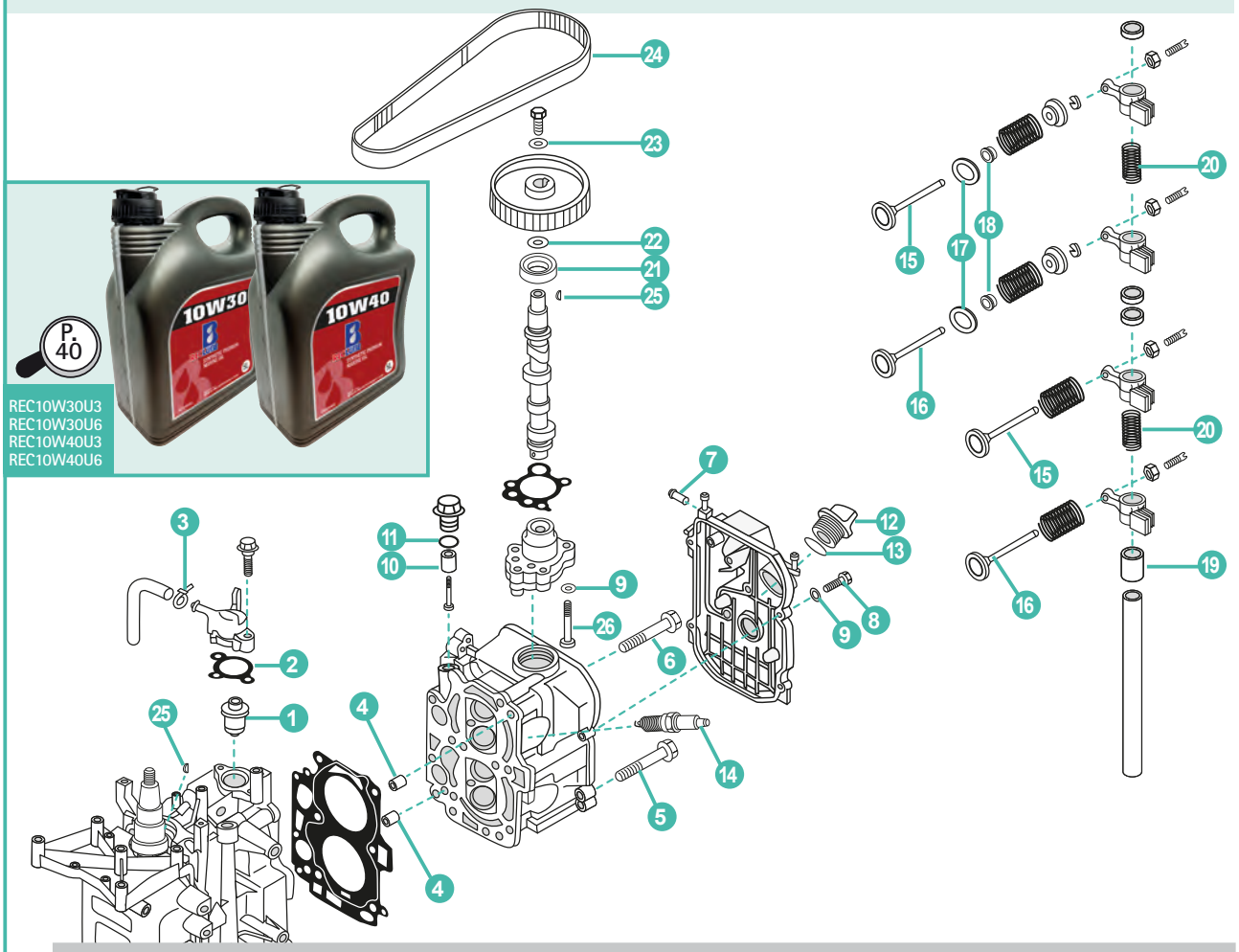

	REF	OEM					UN.
1	PAF15-07000031	66M-12411-01	TERMOSTATO	THERMOSTAT	TERMOSTATO	THERMOSTAT	1
2	REC6G8-12414-A0	60R-E2414-A0	JUNTA	GASKET	GUANIZIONE	JOINT	1
3	PAHT-2.5X60	90465-11M10	BRIDA	CLAMP	FLANGIA	COLLIER	1
4	PAF15-07000001	99510-10114	PIN CENTRADOR	HOLLOW PIN	SPINOTTO DI CENTRAGGIO	PIN DE CENTRAGE	2
5	PAF4-04000034	90105-08M36	TORNILLO	SCREW	VITE	VIS	2
6	PAF15-07000028	90105-08M78	TORNILLO	SCREW	VITE	VIS	4
7	PAF4-04010102	650-24378-00	PIPA DE AGUA	PIPE, WATER	TUBO	RACCORD TUYAU D'EAU	1
8	PAGB/T5783-M6X20	97095-06020	TORNILLO	BOLT	VITE	BOULON	4
9	PAGB/T97.1-6	92995-06600	ARANDELA	WASHER	RONDELLA	RONDELLE	7
10	CM6G8-11325-00A	6G8-11325-00	ÁNODO	ANODE	ANODO	ANODE	1
11	PAGB/T3452.1-13X2	93210-13M63	TÓRICA	O-RING	O-RING	JOINT TORIQUE	1
12	PAF15-07050004	69M-E5363-00	TAPÓN ACEITE	PLUG, OIL	TAPPO OLIO	BOUCHON REMPLISSAGE D'HUILE	1
13	PAF4-04000008	93210-24M79	TÓRICA	O-RING	O-RING	JOINT TORIQUE	1
14	NGKBR6HS-10	94702-00274	BUJÍA	SPARK PLUG	CANDELA	BOUGIE	2
15	PA166F-010001	67D-12111-00	VÁLVULA ADMISIÓN	VALVE, INTAKE	VALVOLA ASPIRAZIONE	SOUPAPE D ADMISSION	2
16	PAF4-04080006	67D-12121-00	VÁLVULA ESCAPE	VALVE, EXHAUST	VALVOLA SCARICO	SOUPAPE D'ECHAPPEMENT	2
17	PAF4-04080007	68T-12116-00	ARANDELA DE ASIENTO	SEAT, VALVE SPRING	RONDELLA BASAMENTO	SIEGE RESSORT DE SOUPAPE	2
18	PA166F-010003	51Y-12119-00	RETÉN DE ACEITE	SEAL RING	PARAOLIO	JOINT D'HUILE	4
19	PAF15-07040012	90387-13M56	CASQUILLO	BUSHER	BOCCOLA	BAGUE	1
20	PAF15-07040014	90501-12M40	RESORTE DE COMPRESIÓN	SPRING, ROCKER	MOLLA	RESSORT ROCKER	2
21	PAF15-07040008	93102-18M21	RETÉN DE ACEITE	SEAL RING	PARAOLIO	JOINT D'HUILE	1
22	PAF15-07040017	90201-13201	ARANDELA	WASHER	RONDELLA	RONDELLE	1
23	PAGB/T5287-6	90201-06M94	ARANDELA	WASHER	RONDELLA	RONDELLE	1
24	REC68T-46241-00	60R-G6241-00	CORREA	BELT	CINGHIA	COURROIE DISTRIBUTION	1
25	PAGB/T1099-3X5X13	90280-03M01	CHAVETA	KEY WOODRUFF	CHIAVETTA	CLAVETTE	2
26	PAGB/T5783-M6X30	97095-06030	PERNO	BOLT	VITE	BOULON	3

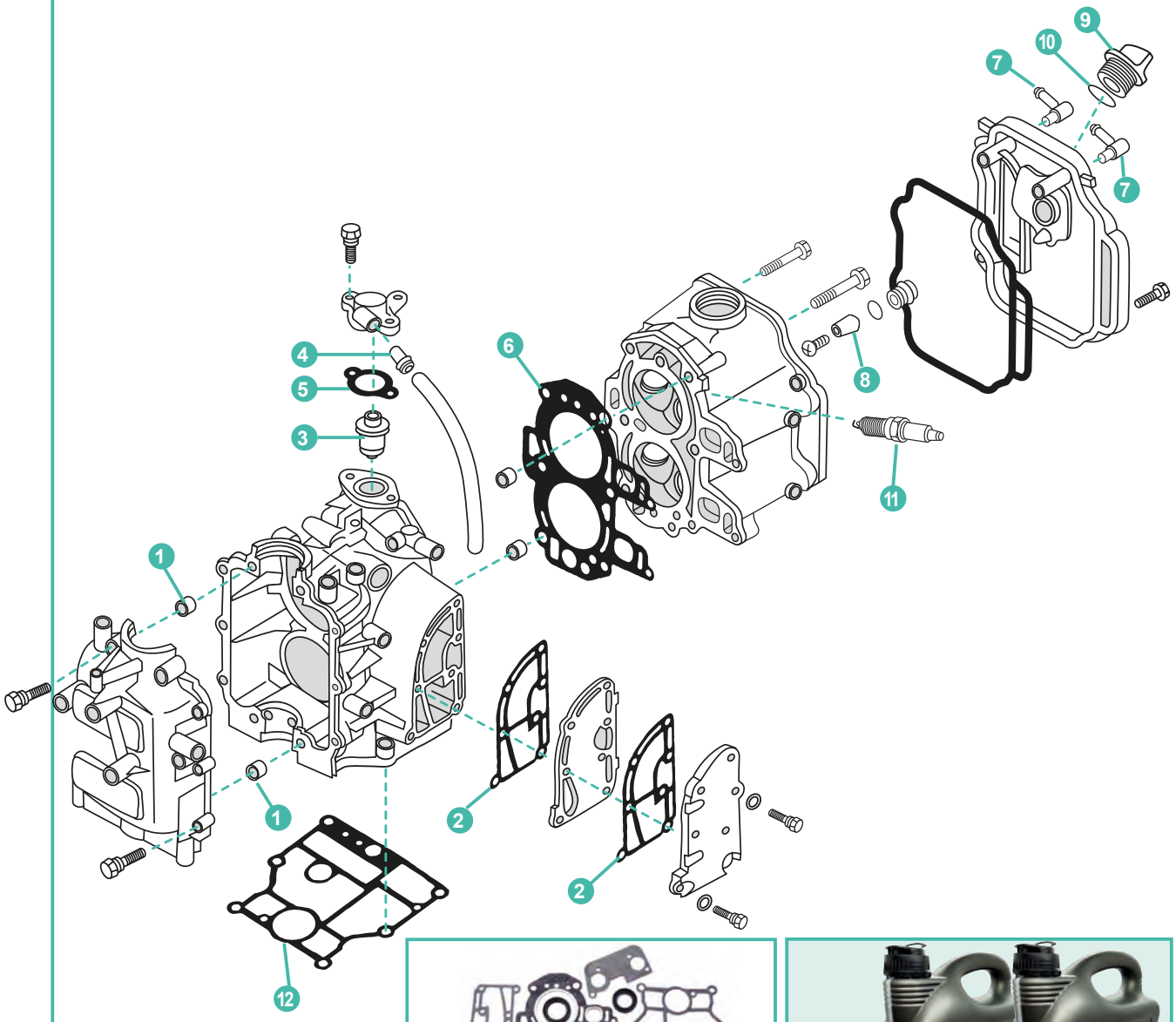

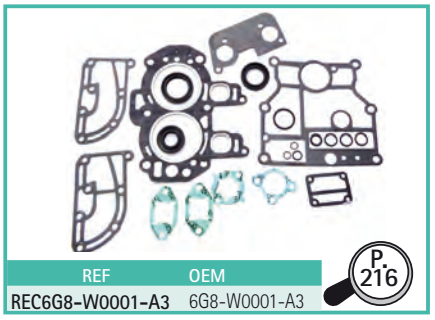

REF	OEM
REC6G8-W0001-A3	6G8-W0001-A3

P. 216



P. 40

REC10W30U3
REC10W30U6
REC10W40U3
REC10W40U6

	REF	OEM					UN.
1	PAF15-07000001	91810-03014	PIN	PIN	PIN	PIN	2
2	REC6G8-41112-02	6G8-41112-02	JUNTA	GASKET	GUARNIZIONE	JOINT	2
3	REC6AH-12411-00	6G8-12411-00	TERMOSTATO	THERMOSTAT	TERMOSTATO	THERMOSTAT	1
4	PAF15-07010006	6E5-24377-00	PIPA DE AGUA	PIPE, WATER	TUBO	RACCORD TUYAU D'EAU	1
5	REC6G8-12414-A0	6G8-12414-00	JUNTA TAPA TERMOSTATO	GASKET, THERMOSTAT COVER	GUARNIZIONE COPERCHIO TERMOSTATO	JOINT COUVERCLE DE THERMOSTAT	1
6	REC6G8-11181-A1	6G8-11181-00	JUNTA CULATA	GASKET, CYLINDER HEAD	GUARNIZIONE TESTATA	JOINT DE CULASSE	1
7	PAF15-04000005	676-11372-00	NIPLE	HOSE NIPLE	TUBO	TUYAU	2
8	CM6G8-11325-00	6G8-11325-00	ÁNODO	ANODE	ANODO	ANODE	1
9	PAF15-07050004	6G8-15363-00	TAPÓN ACEITE	PLUG, OIL	TAPPO OLIO	BOUCHON REMPLISSAGE D'HUILE	1
10	PAJASOF40431-025	93210-24M79	TÓRICA	O-RING	O-RING	JOINT TORIQUE	1
11	NGKCR6HS	94701-00282	BUJÍA	SPARK PLUG	CANDELA	BOUGIE	2
12	REC6G8-11351-A0	6G8-11351-00	JUNTA BASE MOTOR	GASKET ENGINE	GUARNIZIONE BASE MOTOR	JOINT MOTEUR	1

4T STROKES F9.9 (2004-06) • F9.9C • F13.5 (2003-06) • F15 (2003-07) • F15A

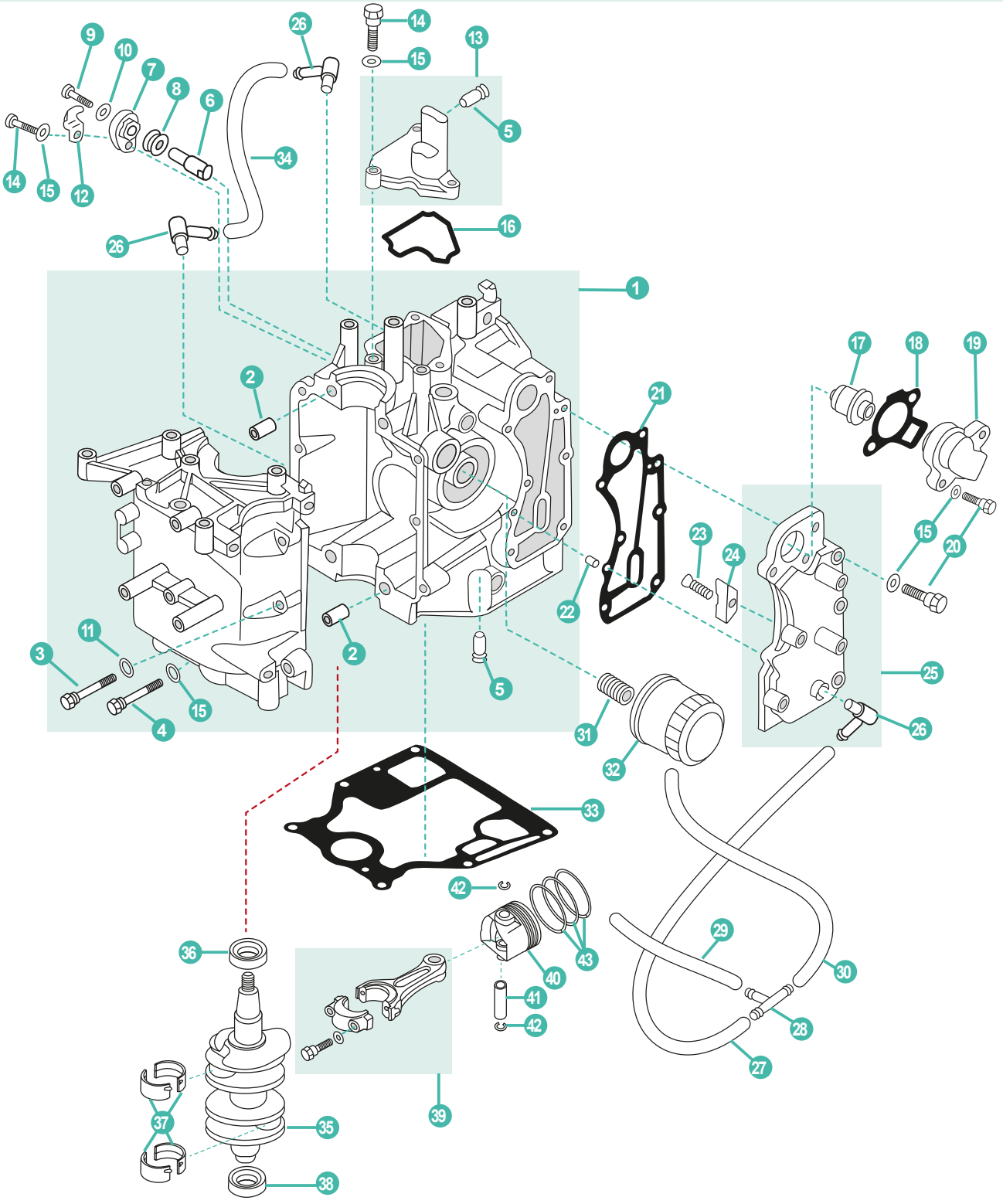



REF	OEM
REC66M-W0093-01	66M-W0093-01

P. 95

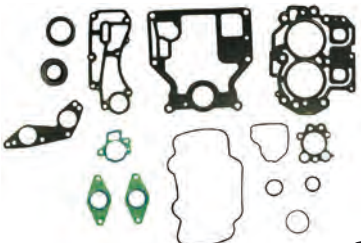

REF	OEM
REC66M-W0001-01	66M-W0001-01

P. 216



P. 40

REC10W30U3
REC10W30U6
REC10W40U3
REC10W40U6

	REF	OEM					UN.
1	PAF15-07010000	66M-15100-02-1S	BLOQUE MOTOR COMPLETO	CRANKCASE ASSY	BLOCCO MOTORE COMPLETO	CARTER BLOC MOTEUR	1
2	PAF15-07000001	99510-10114	PIN CENTRADOR	HOLLOW PIN	SPINOTTO DI CENTRAGGIO	PIN DE CENTRAGE	2
3	PAGB/T5783-M5X12	93102-25090	TORNILLO	SCREW	VITE	VIS	6
4	PAGB/T5783-M5X12	93306-205YD	TORNILLO	SCREW	VITE	VIS	4
5	PAF15-07010006	6E5-24377-00	PIPA DE AGUA	PIPE, WATER	TUBO	RACCORD TUYAU D'EAU	2
6	PAF15-07010008	66M-11325-00	ÁNODO	ANODE	ANODO	ANODE	1
7	PAF15-07010011	66M-11327-00-94	TAPA ÁNODO	COVER, ANODE	COPERTURA ANODO	COUVERCLE DU ANODE	1
8	PAF15-07010009	66M-11328-00	ALOJAMIENTO ÁNODO	GROMMET, ANODE	ALLOGGIAMENTO ANODO	JOINT D'ANODE	1
9	PAGB/T5783-M5X12	97095-0512	TORNILLO	SCREW	VITE	VIS	1
10	PAGB/T97.1-8	92995-05600	ARANDELA	WASHER	RONDELLA	RONDELLE	1
11	PAGB/T97.1-8	97595-06520	ARANDELA	WASHER	RONDELLA	RONDELLE	4
12	PAF15-07010012	66M-12535-00	EMPAQUETADORA DE ÁNODO	PLATE, ANODE	PIASTRA ANODO	PLAQUE D'ANODE	1
13	PAF15-07010200	66M-11168-001S	TAPA	COVER, BREATHER	COPERCHIO	COUVERCLE	1
14	PAGB/T5783-M5X12	97575-08550-00	TORNILLO	SCREW	VITE	VIS	4
15	PAGB/T97.1-8	93102-20108	ARANDELA	WASHER	RONDELLA	RONDELLE	17
16	PAF15-07010014	66M-11357-00	JUNTA TAPA	GASKET, COVER	GAURNIZIONE COPERCHIO	JOINT COUVERCLE	1
17	PAF15-07000031	66M-12411-01	TERMOSTATO	THERMOSTAT	TERMOSTATO	THERMOSTAT	1
18	PAF15-07010022	62Y-12414-00	JUNTA TAPA TERMOSTATO	GASKET, THERMOSTAT COVER	GUARNIZIONE COPERCHIO TERMOSTATO	JOINT COUVERCLE DE THERMOSTAT	1
19	PAF15-07010021	6H3-12413-001S	TAPA TERMOSTATO	COVER, THERMOSTAT	COPERCHIO TERMOSTATO	COUVERCLE DE THERMOSTAT	1
20	PAGB/T5783-M5X12	90201-08818	TORNILLO	SCREW	VITE	VIS	7
21	PAF15-07010018	66M-41114-01	JUNTA EXTERIR, TAPA DE ESCAPE	GASKET, EXHAUST OUTER COVER	GUARNIZIONE ESTERIORE, COPERCHIO SCARICO	JOINT DE COUVERCLE EXT ECHAPPEMENT	1
22	PAF15-07000013	93604-12M07	PIN	OPIN	SPINOTTO	LEVIER D'ENTRAINEMENT	2
23	PAGB/T5783-M5X12	68D-E5362-00	TORNILLO	SCREW	VITE	VIS	1
24	PAF15-07010026	6E5-11325-00	ÁNODO	ANODE	ANODO	ANODE	1
25	PAF15-07010019	66M-41113-20-1S	TAPA ESCAPE COMPLETA	OUTTER COVER, EXHAUST	COPERCHIO SCARICO COMPLETA	COUVERCLE ECHAPPEMENT EXTERIEUR	1
26	PAF15-04000005	676-11372-00	NIPLE DE MANGUERA	NIPPLE	TUBO	RACCORD D'EAU	3
27	PAF15-05000012	90445-09061	TUBO	HOSE A	TUBO	DURITE D'EAU	1
28	PAF15-05000011	688-24378-00	CONECTOR DE 3 VÍAS	THREE-WAY PIPE	CONNETTORE T	TE	1
29	PAF15-05000013	90445-09086	TUBO	HOSE B	TUBO	DURITE D'EAU	1
30	PAF15-05000014	90445-09104	TUBO	HOSE C	TUBO	DURITE D'EAU	1
31	PAF15-07010003	90401-20M00	TORNILLO	SCREW	VITE	VIS	1
32	PAF15-07010023	5GH-13440-00	FILTRO ACEITE	OIL FILTER	FILTRO DELL'OLIO	FILTRE À HUILE	1
	REC5GH-13440-00	5GH-13440-00	FILTRO ACEITE	OIL FILTER	FILTRO DELL'OLIO	FILTRE À HUILE	1
33	PAF15-00000014	66M-11351-10	JUNTA BASE MOTOR	GASKET ENGINE	GUARNIZIONE BASE MOTORE	JOINT MOTEUR	1
34	PAF15-07010007	90445-10M46	TUBO	HOSE, RETURN OIL	TUBO	TUYAU	1
35	PAF15-07030000	66M-11411-00	CIGÜEÑAL	CRANK ASSY	ALBERO MOTORE	VILEBREQUIN	1
36	PAF15-07030006	93102-35M51	RETÉN DE ACEITE	OIL SEAL	PARAOLIO	JOINT D'HUILE	1
37	PAF15-07010024	66M-11416-00	COJINETE BANCADA	MAIN BEARING	CUSCINETTO	PALIER DE VILEBREQUIN	4
38	PAF15-07030007	93102-25M52	RETÉN DE ACEITE	OIL SEAL	PARAOLIO	JOINT D'HUILE	1
39	PAF15-07020100	66M-11650-00	BIELA	ROD, CONNECTING	BIELLA	BIELLE	2
40	PAF15-07020001	66M-11631-00-96	PISTÓN	PISTON	PISTONE	PISTON	2
41	PAF15-07020006	634-11633-00	BULÓN	PIN, PISTON	BULLONE	AXE DE PISTON	2
42	PAF15-07020005	93450-15023	CIRCLIP	CIRCLIP	CIRCLIP	CIRCLIP	4
43	REC66N-11603-00	66N-11603-00	KIT SEGMENTOS DE PISTÓN	PISTON RING KIT	KIT FASCIA PISTONE	KIT DE SEGMENTS	2

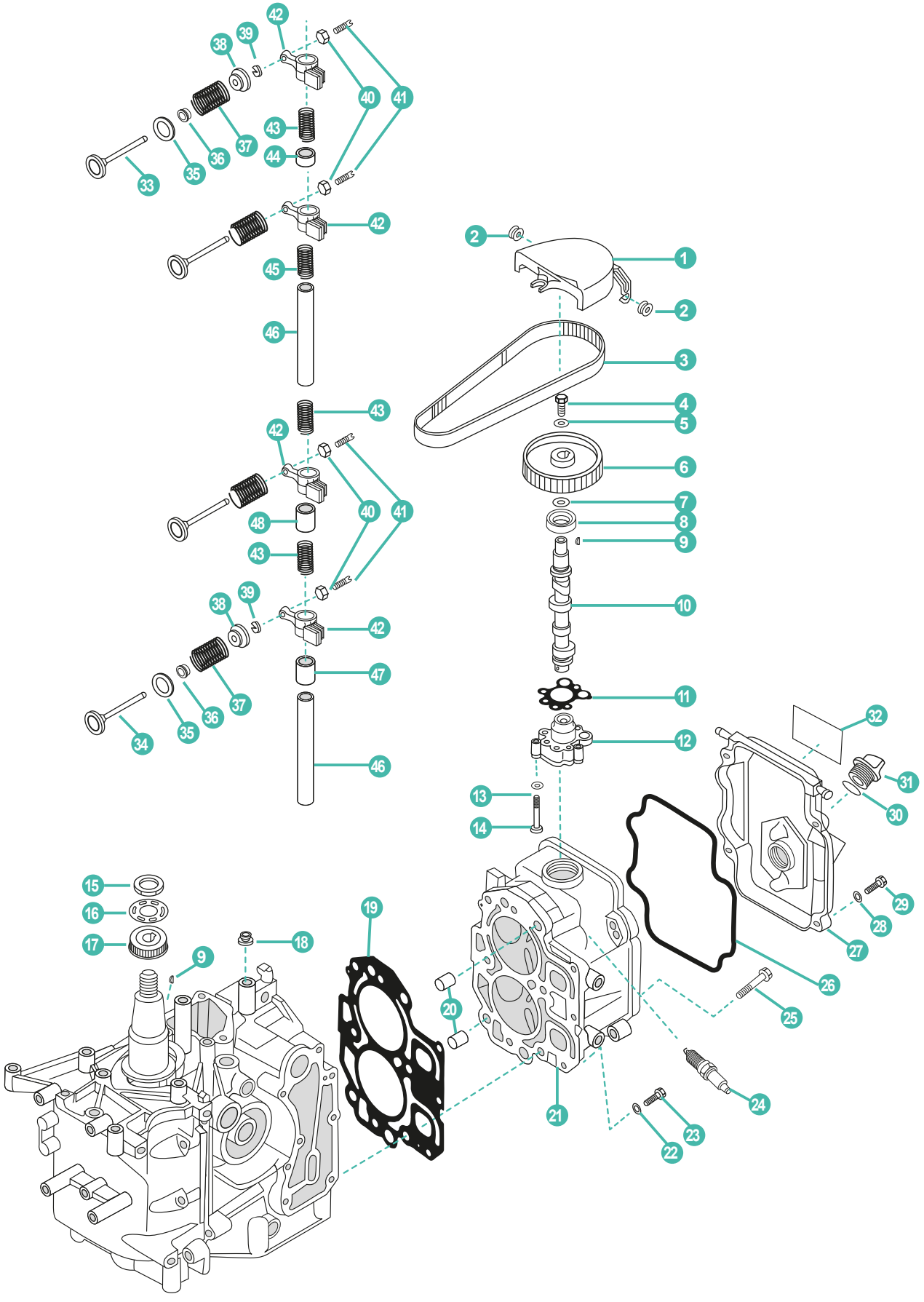
42
38
39
40
41
43
44
37
36
35
33
42
45
46
43
42
40
41
48
43
38
39
42
47
37
36
35
34
46
2
1
2
3
4
5
6
7
8
9
10
11
12
32
31
30
13
14
29
28
27
26
25
15
16
17
9
18
19
20
24
21
23
22

	REF	OEM					UN.
1	PAF15-07000024	66M-46297-00	TAPA	COVER, DUST	COPERCHIO	COUVERCLE	1
2	PAF15-07050003	90480-10M16	GOMA	RING RUBBER A	GOMMINO	BAGUE DE COUVERCLE	2
3	REC66M-46241-00	66M-46241-00	CORREA DISTRIBUCIÓN	BELT TIMING	CINGHIA DISTRIBUZIONE	COURROIE DISTRIBUTION	1
4	PAGB/T5783-M5X12	97013-06016	TORNILLO	BOLT	VITE	VIS	1
5	PAGB/T5287-6	90201-06M94	ARANDELA	BIG WASHER	RONDELLA	RONDELLE	1
6	PAF15-07040018	66M-11537-00-94	POLEA DE CORREA	BELT PULLEY, DRIVEN	PULEGGIA	POULIE DE COURROIE	1
7	PAF15-07040017	90201-13201	ARANDELA	WASHER	RONDELLA	RONDELLE	1
8	PAF15-07040008	93102-18M21	RETÉN DE ACEITE	OIL SEAL	PARAOLIO	JOINT D'HUILE	1
9	PAGB/T1099-3X5X13	90280-03M01	CHAVETA	KEY, WOODRUFF	CHIAVETTA	CLAVETTE	2
10	PAF15-07040200	66M-12170-00	ÁRBOL DE LEVAS	CAMSHAFT ASSY	ALBERO A CAMME	ARBRE À CAMES	1
11	PAF15-07040016	66M-13329-10	JUNTA	MAT, AIRPROOF	GUARNIZIONE	JOINT	1
12	PAF15-07040500	66M-13300-10	BOMBA ACEITE	OIL PUMP ASSY	POMPA DELL'OLIO	POMPE À HUILE	1
13	PAGB/T97.1-8	92995-06600	ARANDELA	WASHER	RONDELLA	RONDELLE	3
14	PAGB/T5783-M5X12	97095-06035	TORNILLO	BOLT	VITE	VIS	3
15	PAF15-07030005	90170-28M37	TUERCA	NUT	GHIERA	ÉCROU	1
16	PAF15-07030004	66M-11557-00	ARANDELA	WASHER	RONDELLA	RONDELLE	1
17	PAF15-07030003	66M-11536-10	POLEA DENTADA	BELT PULLEY, TIMING	PULEGGIA	POULIE	1
18	PAF15-07010027	90480-12072	GOMA	RUBBER RING	GOMMINO	BAGUE DE COUVERCLE	1
19	PAF15-07000100	66M-11181-10	JUNTA CULATA	GASKET, CYLINDER HEAD	GUARNIZIONE TESTATA	JOINT DE CULASSE	1
20	PAF15-07000001	99510-10114	PIN CENTRADOR	HOLLOW PIN	SPINOTTO DI CENTRAGGIO	PIN DE CENTRAGE	2
21	PAF15-07040000	66M-11111-01-1S	CULATA	CYLINDER HEAD ASSY	TESTATA	CULASSE	1
22	PAGB/T97.1-6	92990-06600	ARANDELA	WASHER	RONDELLA	RONDELLE	3
23	PAGB/T5783-M6X25	97513-06525	TORNILLO	BOLT	VITE	VIS	3
24	NGKDPR7EA-9	94701-00375	BUJÍA	SPARK PLUG	CANDELA	BOUGIE	2
25	PAF15-07000028	90105-08M78	TORNILLO	BOLT, FLANGE	VITE	VIS	6
26	PAF15-07050002	66M-11356-00	JUNTA TAPA	SEAL, CYLINDER COVER	GAURNIZIONE COPERCHIO	JOINT COUVERCLE	1
27	PAF15-07050001	66M-11191-00-1S	TAPA BALANCINES	COVER, CYLINDER HEAD	COPERCHIO PUNTERIE	CACHE CULBUTEUR	1
28	PAGB/T5783-M5X12	92995-06600	ARANDELA	WASHER, PLATE	RONDELLA	RONDELLE	7
29	PAGB/T5783-M6X20	97595-06520	TORNILLO	BOLT	VITE	VIS	4
30	PAF4-04000008	93210-24M79	TÓRICA	O-RING	O-RING	TORIQUE	1
31	PAF15-07050004	6G8-15363-00	TAPÓN ACEITE	PLUG, OIL	TAPPO OLIO	BOUCHON REMPLISSAGE D'HUILE	1
32	PAF15-10030001	66M-12138-60	ADHESIVO 4	MARK 4	ADESIVO 4	AUTOCOLLANT 4	1
33	PAF15-07040001	66M-12111-00	VÁLVULA ADMISIÓN	VALVE, INTAKE	VALVOLA ASPIRAZIONE	SOUPAPE D ADMISSION	2
34	PAF15-07040002	66M-12121-00	VÁLVULA ESCAPE	VALVE, EXHAUST	VALVOLA SCARICO	SOUPAPE D'ECHAPPEMENT	2
35	PAF15-07040004	66M-12116-00	ARANDELA DE ASIENTO	SEAT, VALVE SPRING	RONDELLA BASAMENTO	SIEGE RESSORT DE SOUPAPE	4
36	PAPS2700.04.03	51Y-12119-00	RETÉN	SEAL, VALVESTEM	GUARNIZIONE	JOINT D'HUILE	4
37	PAF15-07040005	66M-12113-00	MUELLE	SPRING, VALVE	MOLLA	RESSORT	4
38	PAF15-07050006	30X-12117-00	RETÉN RESORTE	SPRING, VALVE RETAINER	VALVOLA DI RITEGNO	JOINT DE RESSORT	4
39	PAF15-07040007	30X-12118-00	SEGURO DE VÁLVULA	CLAMP, VALVE	BLOCCAGGIO DI VALVOLA	CLAVETTE DE SOUPAPE	8
40	PAF15-07040304	62Y-12158-00	TUERCA	LOCK NUT	DADO	ÉCROU	4
41	PAF15-07040303	62Y-12159-00	TORNILLO REGULADOR	SCREW, VALVE ADJUSTING	VITE REGOLATORE	VIS POINTEAU	4
42	PAF15-07040301	66M-12151-10	BALANCÍN	VALVE ROCKER	BILANCERE	CULBUTEUR	4
43	PAF15-07040014	90501-12M40	MUELLE	SPRING, ROCKER	MOLLA	RESSORT	3
44	PAF15-07040009	90387-13001	CASQUILLO	BUSHER	GOMMINO	DOUILLE	1
45	PAF15-07040013	90501-12M41	MUELLE	SPRING, ROCKER A	MOLLA	RESSORT	1
46	PAF15-07040015	66M-12146-00	EJE DE BALANCÍN	SHAFT, ROCKER	ASSE BILANCERE	AXE DE CULBUTEUR	2
47	PAF15-07040012	90387-13M56	CASQUILLO B	BUSHER B	GOMMINO B	BAGUE B	1
48	PAF15-07040011	90387-13002	CASQUILLO A	BUSHER A	GOMMINO A	BAGUE A	1
49	PAF15-07000000	66M-W009B-15-1S	MOTOR COMPLETO	POWER HEAD COMPLETE	MOTORE COMPLETO	MOTEUR COMPLET	1

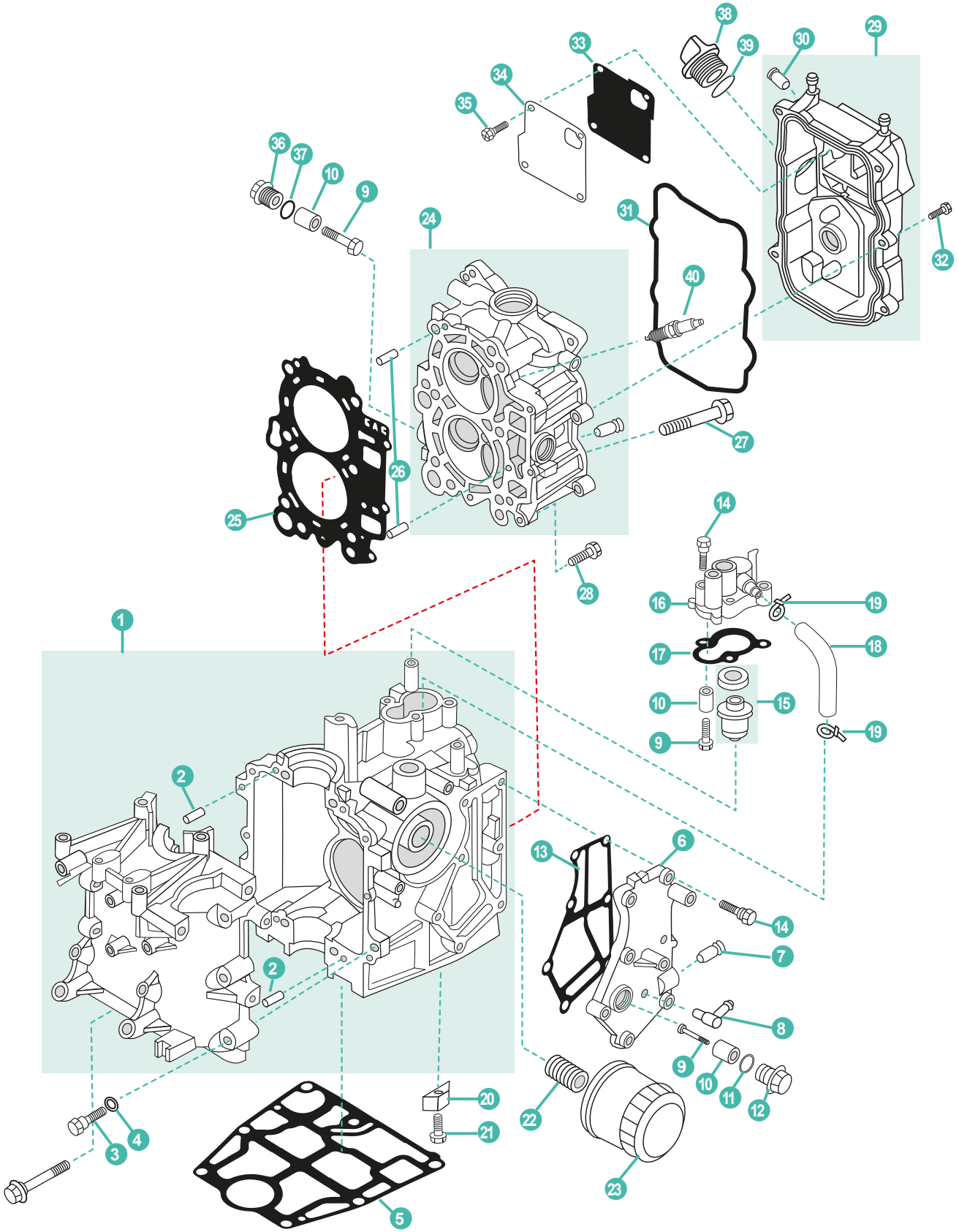
1
2
2
3
4
5
6
7
8
9
10
11
12
13
14
9
10
15
16
17
18
19
19
20
21
22
23
24
25
26
27
28
29
30
31
32
33
34
35
36
37
38
39
40

	REF	OEM					UN.
1	PAF20-05010000	6AH-15100-00	CÁRTER COMPLETO	CRANKCASE ASSY	CARTER COMPLETO	CARTER BLOC MOTEUR	1
2	REC93606-12019	93606-12019	PIN CENTRADOR	HOLLOW PIN	SPINOTTO DI CENTRAGGIO	PIN DE CENTRAGE	4
3	PAF20-05010007	97013-06040	PERNO	BOLT	BULLONE	BOULON	6
4	PAGB/T97.1-6	92903-06600	ARANDELA	WASHER	RONDELLA	RONDELLE	6
5	REC6AH-11351-00	6AH-11351-10	JUNTA DE ESCAPE	EXHAUST GASKET	GUARNIZIONE DI SCARICO	JOINT D'ECHAPPEMENT	1
6	PAF20-05000600	6AH-41113-01-1S	CUBIERTA DE ESCAPE	EXHAUST COVER	COPERCHIO SCARICO	COUVERCLE D'ECHAPPEMENT	1
7	PAF4-04010102	6E9-24378-00	PIPA DE AGUA	PIPE, WATER	TUBO	RACCORD TUYAU D'EAU	1
8	PAF15-04000005	6H1-11372-00	NIPLE DE MANGUERA	NIPPLE	TUBO	RACCORD D'EAU	1
9	PAGB/T818-M5X25	98980-05025	TORNILLO	SCREW	VITE	VIS	4
10	CM6G8-11325-00A	6G8-11325-00	ÁNODO	ANODE	ANODO	ANODE	4
11	PAGB/T3452.1-13X2	93210-13M63	ANILLO	O-RING	O-RING	TORIQUE	1
12	PAF20-05030009	6G8-11197-A0	TAPÓN	CAP	TAPPO	BOUCHON	1
13	PAF20-05000602	6AH-41114-00	JUNTA DE ESCAPE	EXHAUST GASKET	GUARNIZIONE DI SCARICO	JOINT D'ECHAPPEMENT	1
14	PAGB/T5783-M6X25	90119-06MA3	TORNILLO	SCREW	VITE	VIS	3
15	REC6AH-12411-00	6AH-12411-00	TERMOSTATO	THERMOSTAT	TERMOSTATO	THERMOSTAT	1
16	PAF20-05000700	6AH-12413-00-1S	TAPA TERMOSTATO	COVER, THERMOSTAT	COPERCHIO TERMOSTATO	COUVERCLE DE THERMOSTAT	1
17	PAF20-05000702	6AH-12414-00	JUNTA	GASKET	GUARNIZIONE	JOINT	1
18	PAF20-05000016	6AH-12481-00	TUBO DE AGUA	WATER TUBE	TUBO DELL'ACQUA	DURITE D'EAU	1
19	PAHT2.5X50	90465-11M10	BRIDA	CLAMP	FLANGIA	COLLIER	2
20	CM15026A	6E5-11325-00	ÁNODO	ANODE	ANODO	ANODE	1
21	PAGB/T820-M4X12	98780-04016	TORNILLO	SCREW	VITE	VIS	1
22	PAF15-07010003	6C5-12858-00	PERNO	STUD	BULLONE	BOULON	1
23	REC5GH-13440-60	5GH-13440-60	FILTRO ACEITE	OIL FILTER	FILTRO DELL'OLIO	FILTRE À HUILE	1
24	PAF20-05030100	6AH-11111-10-1S	CULATA	CYLINDER HEAD	TESTATA	CULASSE	1
25	REC6AG-11181-00	6AG-11181-10	JUNTA CULATA	GASKET, CYLINDER HEAD	GUARNIZIONE TESTATA	JOINT DE CULASSE	1
26	REC93606-12019	93606-12019	PIN CENTRADOR	HOLLOW PIN	SPINOTTO DI CENTRAGGIO	PIN DE CENTRAGE	2
27	PAF20-05000002	90105-090006	TORNILLO	SCREW	VITE	VIS	6
28	PAF8-05000022	90119-06MA3	TORNILLO	SCREW	VITE	VIS	3
29	PAF20-05040000	6AH-11191-001S	TAPA DE CULATA COMPLETA	CYLINDER HEAD COVER ASSY	COPERCHIO TESTATA COMPLETA	CACHE CULBUTEUR COMPLÈTE	1
30	PAF20-05040005	6AH-11372-00	NIPLE DE MANGUERA	NIPPLE	TUBO	RACCORD D'EAU	1
31	PAF20-05040002	6AH-11356-00	RETÉN DE ACEITE	OIL SEAL	PARAOLIO	JOINT D'HUILE	1
32	PAGB/T5783-M6X20	97595-06520	PERNO	STUD	BULLONE	BOULON	5
33	PAF20-05040003	6AH-11168-00	CUBIERTA DE RESPIRADERO	COVER, BREATHER	COPERCHIO	PLAQUE	1
34	PAF20-05040004	6AH-11169-00	JUNTA DE CUBIERTA	GASKET, BREATHER	GUARNIZIONE COPERCHIO	JOINT DE PLAQUE	1
35	PAGB/T818-M4X10	97607-04210	TORNILLO	SCREW	VITE	VIS	4
36	PAF20-05030009	6G8-11197-A0	TAPÓN	CAP	TAPPO	BOUCHON	2
37	PAGB/T3452.1-13X2	93210-13M63	ANILLO	O-RING	O-RING	TORIQUE	2
38	PAF15-07050004	6G8-15363-00	TAPÓN DE ACEITE	OIL CAP	TAPPO OLIO	BOUCHON REMPLISSAGE D'HUILE	1
39	PAJASOF40431-025	93210-24M79	ANILLO	O-RING	O-RING	TORIQUE	1
40	NGKDPR6EB-9	94702-00418	BUJÍA	SPARK PLUG	CANDELA	BOUGIE	2



REC10W30U3
REC10W30U6
REC10W40U3
REC10W40U6

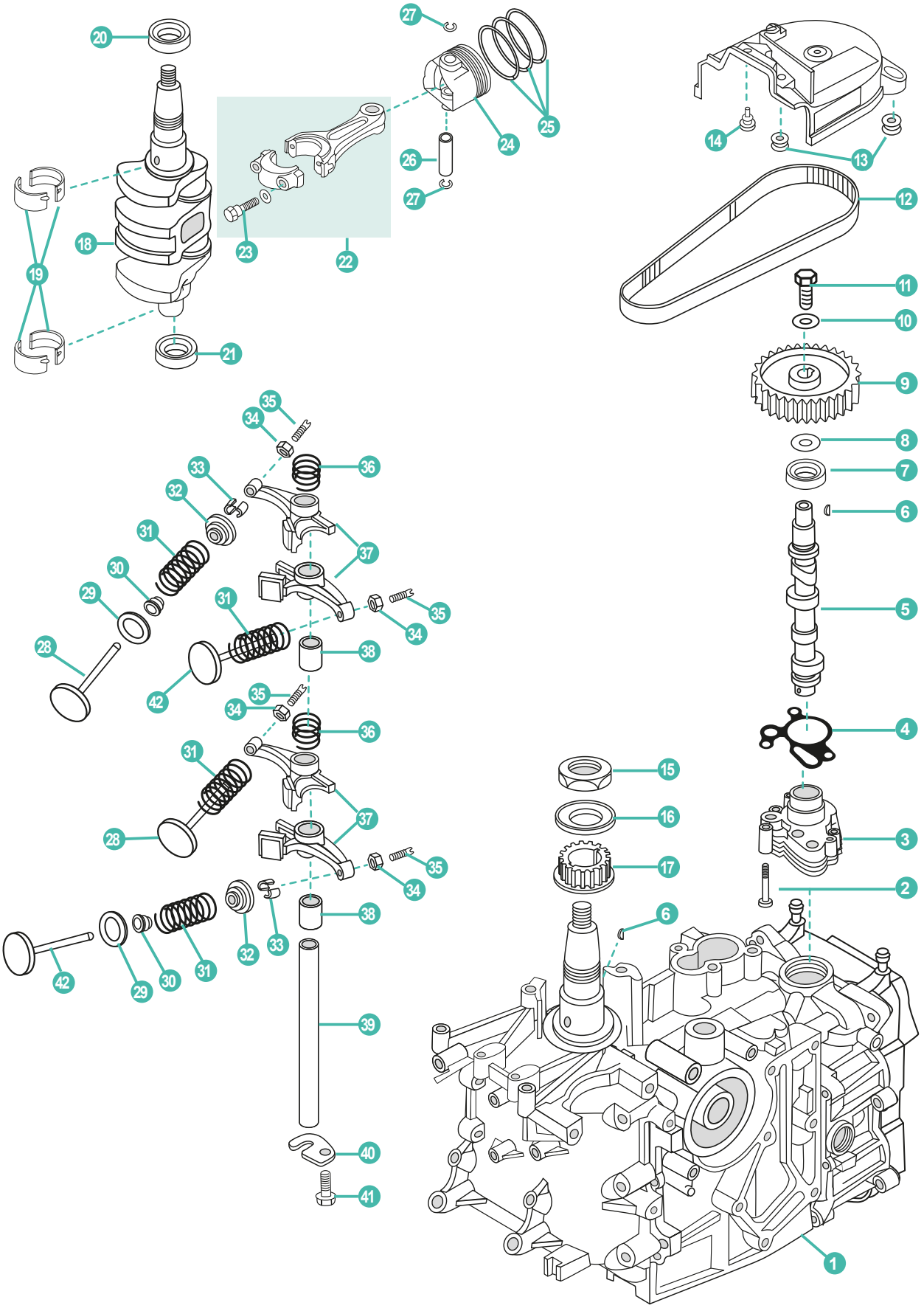
1
2
3
4
5
6
7
8
9
10
11
12
13
14
15
16
17
18
19
20
21
22
23
24
25
26
27
28
29
30
31
32
33
34
35
36
37
38
39
40
41
42

	REF	OEM					UN.
1	PAF20-05000000	6AH-W009B-02-1S	CILINDRO BLOQUE COMPLETO	POWER HEAD ASSY	BLOCCO COMPLETO	TÊTE MOTRICE	1
2	PAGB/T5783-M6X35	90105-06035	TORNILLO	SCREW	VITE	VIS	3
3	PAF20-05030400	6AH-13300-00	BOMBA DE ACEITE	OIL PUMP	POMPA DELL'OLIO	POMPE À HUILE	1
4	PAF20-05030010	6AH-13329-10	JUNTA TAPA	GASKET, COVER	GAURNIZIONE COPERCHIO	JOINT COUVERCLE	1
5	PAF20-05030200	6AH-12170-00	ÁRBOL DE LEVAS	CAMSHAFT ASSY	ALBERO A CAMME	ARBRE À CAMES	1
6	PAGB/T1099-3X5X13	90280-03M01	CUÑA	KEY WOODRUFF	CHIAVETTA	CLAVETTE	2
7	PAF20-05030005	93102-22010	RETÉN DE ACEITE	OIL SEAL	PARAOLIO	JOINT D'HUILE	1
8	PAF20-05030011	90201-15423	ARANDELA	WASHER	RONDELLA	RONDELLE	1
9	PAF20-05030012	6AH-11537-00	POLEA DE CORREA	BELT PULLEY, DRIVEN	PULEGGIA CINGHIA	POULIE DE COURROIE	1
10	PAF20-05030013	90201-08784	ARANDELA	WASHER	RONDELLA	RONDELLE	1
11	PAGB/T5783-M8X25	90105-081A7	TORNILLO	SCREW	VITE	VIS	1
12	PAF20-05000003	6AH-46241-00	CORREA	BELT	CINGHIA	COURROIE	1
13	PAF20-05000034	90480-10627	TAPÓN	CAP	TAPPO	BOUCHON	3
14	PAF20-05000036	90480-06M19	TAPÓN	CAP	TAPPO	BOUCHON	1
15	PAF20-05000029	90170-30003	TUERCA	NUT	DADO	ÉCROU	1
16	PAF20-05000028	6AH-11557-00	ARANDELA	WASHER	RONDELLA	RONDELLE	1
17	PAF20-05000027	6AH-11536-00	ENGRANAJE DE DISTRIBUCIÓN	BELT PULLEY, TIMING	PULEGGIA DE DISTRIBUZIONE	POULIE DE DISTRIBUTION	1
18	PAF20-05020004	6AH-11411-00	CIGÜEÑAL	CRANK ASSY	ALBERO MOTORE	VILEBREQUIN	1
19	PAF20-05010003	6AH-11416-00	COJINETE BANCADA	MAIN BEARING	CUSCINETTO	PALIER DE VILEBREQUIN	1
20	PAF25-05050021	93102-37004	RETÉN DE ACEITE	OIL SEAL	PARAOLIO	JOINT D'HUILE	1
21	PAF15-07030006	93102-25014	RETÉN DE ACEITE	OIL SEAL	PARAOLIO	JOINT D'HUILE	1
22	PAF20-05020200	6AH-11650-10	BIELA	ROD, CONNECTING	BIELLA	BIELLE	2
23	PAF25-05020204	6AH-11654-00	TORNILLO	SCREW	VITE	VIS	2
24	PAF20-05020001	6AH-11631-00	PISTÓN **STD**	PISTON **STD**	PISTONE **STD**	PISTON **STD**	2
25	PAF20-05020100	6AH-11603-00	KIT SEGMENTOS DE PISTÓN **STD**	PISTON RING KIT **STD**	KIT FASCIA PISTONE **STD**	KIT SEGMENTS **STD**	2
26	PAF20-05020003	137-11633-10	PIN, PISTÓN	PIN, PISTON	SPINOTTO PISTONE	AXE DE PISTON	2
27	PAF20-05020002	93450-17129	CIRCLIP	CIRCLIP	CIRCLIP	CIRCLIP	4
28	PAF20-05030001	6AH-12111-00	VÁLVULA ADMISIÓN	VALVE, INTAKE	VALVOLA ASPIRAZIONE	SOUPAPE D ADMISSION	2
29	PAF20-05030003	62Y-12116-00	ARANDELA DE ASIENTO	SEAT, VALVE SPRING	RONDELLA BASAMENTO	SIEGE RESSORT DE SOUPAPE	4
30	PA166F-010003	51Y-12119-00	RETÉN DE ACEITE	OIL SEAL	PARAOLIO	JOINT D'HUILE	4
31	PAF20-05030004	3YF-12113-00	MUELLE DE VÁLVULA	SPRING, VALVE STEM	MOLLA DI VALVOLA	RESSORT DE SOUPAPE	4
32	PAF15-07040006	30X-12117-00	RETÉN RESORTE	SPRING, VALVE RETAINER	VALVOLA DI RITEGNO	JOINT DE RESSORT	4
33	PAF15-07040007	30X-12118-00	SEGURO DE VÁLVULA	CLAMP, VALVE	BLOCCAGGIO DI VALVOLA	CLAVETTE DE SOUPAPE	8
34	PAF15-07040304	62Y-12158-00	TUERCA	LOCK NUT	DADO	ÉCROU	4
35	PAF15-07040303	64J-12159-00	TORNILLO REGULADOR	SCREW, VALVE ADJUSTING	VITE REGOLATORE	VIS POINTEAU	4
36	PAF20-05030007	90501-120A5	RESORTE DE COMPRESIÓN	SPRING, ROCKER	MOLLA	RESSORT ROCKER	2
37	PAF20-05030301	6AH-12151-00	BRAZO DE BALANCÍN	ARM, VALVE ROCKER	BILANCERE	CULBUTEUR	4
38	PAF20-05030006	90387-13006	ESPACIADOR	COLLAR	DISTANZIALE	ENTRETOISE	2
39	PAF15-07040015	66M-12146-00	EJE DE BALANCÍN	SHAFT, ROCKER	ASSE DE BILANCERE	AXE DE CULBUTEUR	1
40	PAF20-05030008	6AH-12279-00	PLACA	PLATE	PIASTRA	PLAQUE	1
41	PAGB/T5783-M6X12	97013-06012	TORNILLO	SCREW	VITE	VIS	1
42	PAF20-05030002	6AH-12121-10	VÁLVULA ESCAPE	VALVE, EXHAUST	VALVOLA SCARICO	SOUPAPE D'ECHAPPEMENT	2

4T STROKES FT • F20 • F25 (1998-08)

P. 95

REF	OEM
REC8542561	65W-W0093-02

P. 217

REF	OEM
REC65W-W0001-00	65W-W0001-02

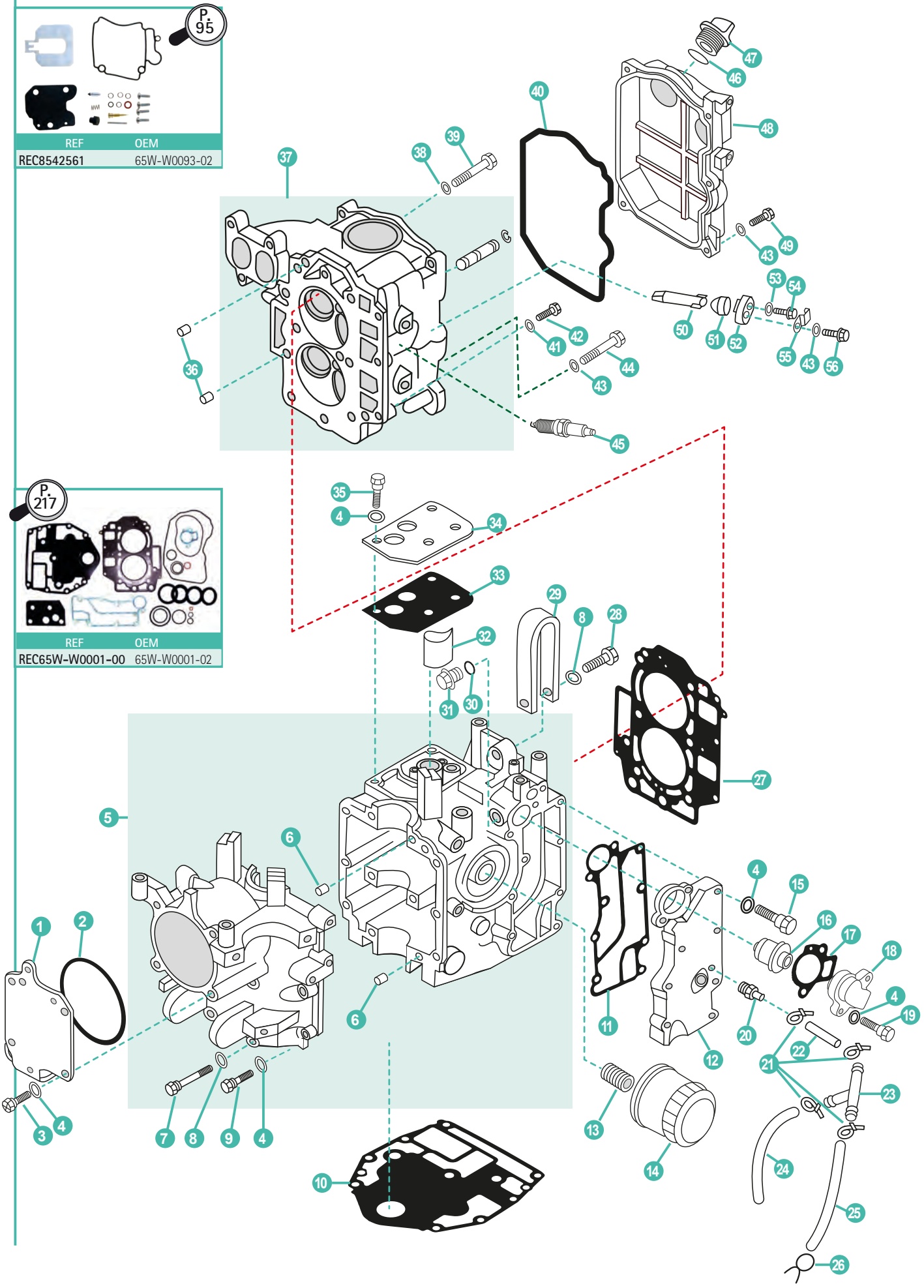

	REF	OEM					UN.
1	PAF25-05000007	65W-15121-00	TAPA	COVER	COPERCHIO	COUVERCLE	1
2	PAGBT3452.1-97.5X1.8	65W-15663-00	JUNTA	SEAL	GUARNIZIONE	JOINT	1
3	PAGB/T5783-M6X20	65W-12228-00	TORNILLO	BOLT, HEXAGON	VITE	VIS	4
4	PAGB/T97.1-8	66M-11356-00	ARANDELA	WASHER 6	RONDELLA	RONDELLE	17
5	PAF25-05010000	65W-15100-00-94	BLOQUE MOTOR COMPLETO	CRANKCASE ASSY	BLOCCO MOTORE COMPLETO	CARTER BLOC MOTEUR	1
6	PAF25-00000014	99530-08012	PIN CENTRADOR	HOLLOW PIN	SPINOTTO DI CENTRAGGIO	PIN DE CENTRAGE	2
7	PAGB/T5782-M8X80	90119-08M01	TORNILLO	BOLT, HEXAGON	VITE	VIS	6
8	PAGB/T97.1-8	97595-06520	ARANDELA	WASHER	RONDELLA	RONDELLE	7
9	PAGB/T5782-M6X35	90119-06MA5	TORNILLO	BOLT, HEXAGON	VITE	VIS	6
10	PAF25-00000013	65W-11351-00	JUNTA BASE MOTOR	GASKET ENGINE	GUARNIZIONE BASE MOTORE	JOINT MOTEUR	1
11	PAF25-05010111	65W-41114-00	JUNTA EXTERIOR, TAPA DE ESCAPE	GASKET, EXHAUST OUTER COVER	GUARNIZIONE ESTERIORE, COPERCHIO SCARICO	JOINT DE COUVERCLE EXT ECHAPPEMENT	1
12	PAF25-05010112	65W-41113-01-94	TAPA EXTERIOR DE ESCAPE	OUTTER COVER, EXHAUST	COPERCHIO SCARICO	COUVERCLE D'ECHAPPEMENT	1
13	PAF15-07010003	90401-20M00	TORNILLO	BOLT, UNION	VITE	VIS	1
14	PAF25-05000100	5GH-13440-00	FILTRO ACEITE	OIL FILTER	FILTRO DELL'OLIO	FILTRE À HUILE	1
14	REC5GH-13440-00	5GH-13440-00	FILTRO ACEITE	OIL FILTER	FILTRO DELL'OLIO	FILTRE À HUILE	1
15	PAGB/T5783-M6X35	90119-06MAS	TORNILLO	BOLT	VITE	VIS	7
16	PAF15-07000031	6G8-12411-02	TERMOSTATO	THERMOSTAT	TERMOSTATO	THERMOSTAT	1
17	PAF15-07010022	62Y-12414-00	JUNTA TAPA TERMOSTATO	GASKET, THERMOSTAT COVER	GUARNIZIONE COPERCHIO TERMOSTATO	JOINT COUVERCLE DE THERMOSTAT	1
18	PAF15-07010021	6H3-12413-00-9M	TAPA TERMOSTATO	COVER, THERMOSTAT	COPERCHIO TERMOSTATO	COUVERCLE DE THERMOSTAT	1
19	PAGB/T5783-M6X25	90119-06MA5	TORNILLO	BOLT	VITE	VIS	2
20	PAF25-05010113	62Y-11372-01	NIPLE DE MANGUERA	NIPPLE	TUBO	RACCORD D'EAU	1
21	PAHT-2.5x60	90465-11M10	BRIDA	CLAMP	FLANGIA	COLLIER	5
22	PAF25-03000008	90445-09068	TUBO DE AGUA	WATER TUBE	TUBO DELL'ACQUA	DURITE D'EAU	1
23	PAF15-05000011	688-24378-00	CONECTOR DE 3 VÍAS	THREE-WAY PIPE	CONNETTORE T	TE	1
24	PAF25-03000009	90445-09095	TUBO DE AGUA	WATER TUBE	TUBO DELL'ACQUA	DURITE D'EAU	1
25	PAF25-03000011	90445-09105	TUBO DE AGUA	WATER TUBE	TUBO DELL'ACQUA	DURITE D'EAU	1
26	PAF4-04000030	90467-09M09	MUELLE TUBO COMBUSTIBLE **B**	SPRING, FUEL PIPE **B**	MOLLA TUBO COMBUSTIBILE **B**	RESSORT, TUYAU DE CARBURANT	1
27	PAF25-05040000	65W-11181-30	JUNTA CULATA	GASKET, CYLINDER HEAD	GUARNIZIONE TESTATA	JOINT DE CULASSE	1
28	PAGB/T5782-M8X35	65W-08M87	TORNILLO	BOLT, HEXAGON	VITE	VIS	1
29	PAF25-05010106	66W-11119-00	SOPORTE	HANGER, ENGINE	SUPPORTO	CROCHET LEVAGE MOTEUR	1
30	PAF15-04000003	90430-14M09	ARANDELA	WASHER	RONDELLA	RONDELLE	1
31	PAF15-04000002	90340-14M06	TORNILLO DRENAJE	BOLT, DISCHARGING OIL	VITE DRENAGGIO	VIS DE VIDANGE	1
32	PAF25-05010107	65W-13286-00	FILTRO ACEITE	OIL FILTER	FILTRO DELL'OLIO	FILTRE À HUILE	1
33	PAF25-05010108	65W-11169-00	JUNTA DE CUBIERTA	GASKET, BREATHER	GUARNIZIONE COPERCHIO	JOINT DE PLAQUE	1
34	PAF25-05010103	65W-11168-00	CUBIERTA DE RESPIRADERO	COVER, BREATHER	COPERCHIO	PLAQUE	1
35	PAGB/T5783-M6X20	65W-12228-00	TORNILLO	BOLT, HEXAGON	VITE	VIS	4
36	PAF25-00000014	99530-08012	PIN CENTRADOR	HOLLOW PIN	SPINOTTO DI CENTRAGGIO	PIN DE CENTRAGE	2
37	PAF25-05050100	65W-11111-02-94	CULATA	CYLINDER HEAD	TESTATA	CULASSE	1
38	PAF25-05050007	90430-06014	JUNTA	GASKET	GUARNIZIONE	JOINT	1
39	PAF25-05050006	90109-06M65	TORNILLO	BOLT	VITE	VIS	1
40	PAF25-05000004	65W-11356-00	JUNTA TAPA	GASKET, COVER	GAURNIZIONE COPERCHIO	JOINT COUVERCLE	1
41	PAGB/T97.1-8	97595-06520	ARANDELA	WASHER, PLATE	RONDELLA	RONDELLE	10
42	PAGB/T5783-M6X25	90119-06MA3	TORNILLO	BOLT, HEXAGON	VITE	VIS	6
43	PAF25-05000003		ARANDELA	WASHER, PLATE	RONDELLA	RONDELLE	10
44	PAF25-05000002	90119-09M00	TORNILLO	BOLT, FLANGE	VITE	VIS	9
45	NGKDPR7EA-9	94701-00375	BUJÍA	SPARK-PLUG	CANDELA	BOUGIE	2
46	PAJASOF40431-025	93210-24M79	TÓRICA	O-RING	O-RING	TORIQUE	1
47	PAF15-07050004	6G8-15363-00	TAPÓN ACEITE	PLUG, OIL	TAPPO OLIO	BOUCHON REMPLISSAGE D'HUILE	1
48	PAF25-05000005	65W-11191-00-94	TAPA BALANCINES	COVER, CYLINDER HEAD	COPERCHIO PUNTERIE	CACHE CULBUTEUR	1
49	PAGB/T5783-M6X20	90119-06MA3	TORNILLO	BOLT, HEXAGON	VITE	VIS	5
50	PAF25-02010005	62Y-11325-00	ÁNODO	ANODE	ANODO	ANODE	2
51	PAF15-07010009	66M-11328-00	ALOJAMIENTO ÁNODO	GROMMET, ANODE	ALLOGGIAMENTO ANODO	JOINT D'ANODE	2
52	PAF15-07010011	66M-11327-00-94	TAPA	COVER, ANODE	COPERTURA ANODO	COUVERCLE DU ANODE	2
53	PAGB/T97.1-5	92995-05600	ARANDELA	WASHER, PLATE	RONDELLA	RONDELLE	2
54	PAGB/T5783-M5X12	97095-05012	TORNILLO	BOLT, HEXAGON	VITE	VIS	2
55	PAF15-07010012	66M-12535-00	PLETINA	PLATE, ANODE	PIASTRA ANODO	PLAQUE	2
56	PAGB/T5783-M6X20	97095-06020	TORNILLO	BOLT, HEXAGON	VITE	VIS	2

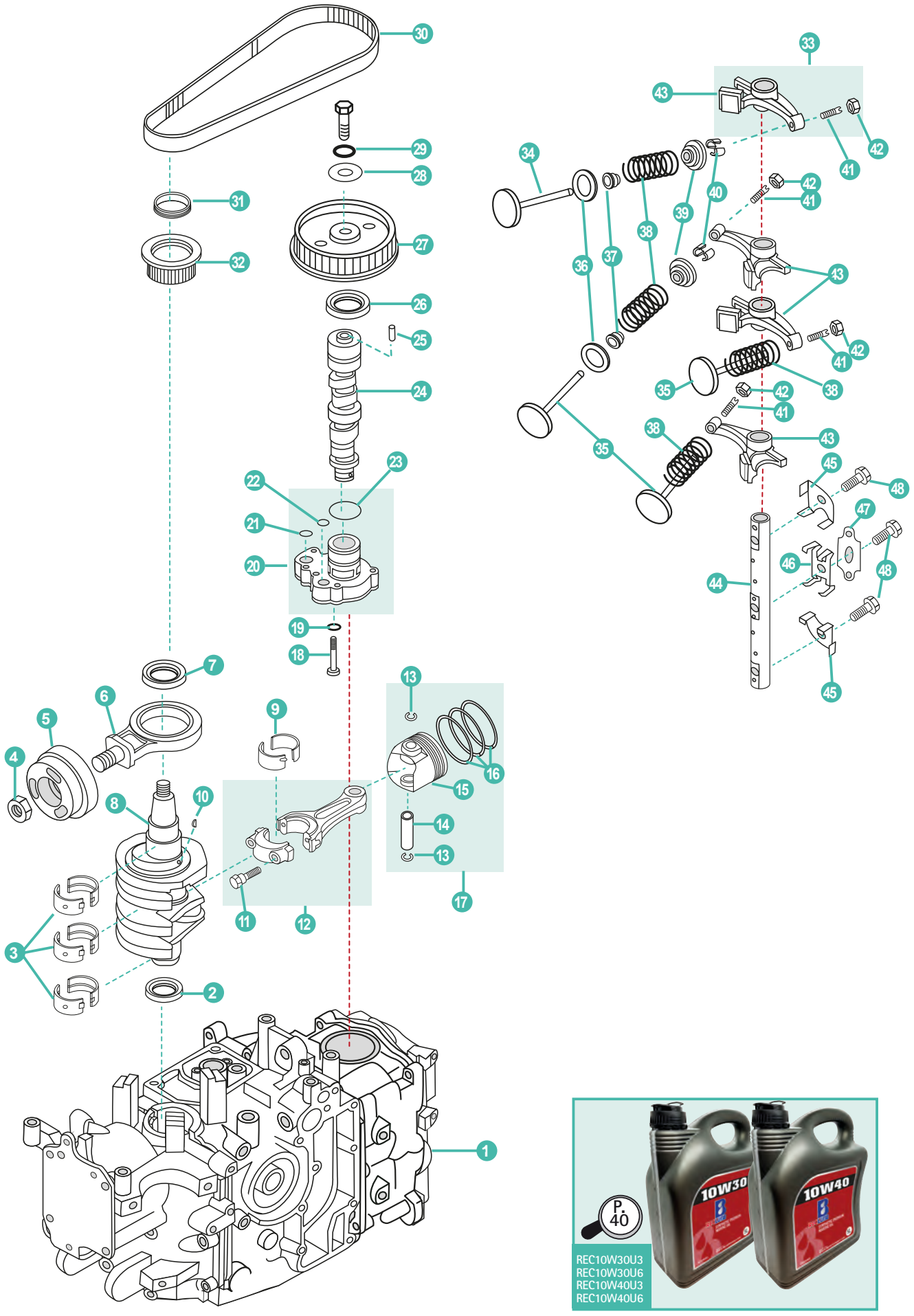
1
2
3
4
5
6
7
8
9
10
11
12
13
14
15
16
17
18
19
20
21
22
23
24
25
26
27
28
29
30
31
32
33
34
35
36
37
38
39
40
41
42
43
44
45
46
47
48

P. 40
10W30
10W40
REC10W30U3
REC10W30U6
REC10W40U3
REC10W40U6

	REF	OEM					UN.
1	POWERHEAD20-25		MOTOR	COMPLETE, POWER	BLOCCO COMPLETO	TÊTE MOTRICE	1
2	PAF25-05020002	93102-35M47	RETÉN	OIL-SEAL	GUARNIZIONE	JOINT D'HUILE	1
3	PAF25-05010302-1	62Y-11416-00	COJINETE BANCADA **BROWN**	MAIN BEARING **BROWN**	CUSCINETTO **BROWN**	PALIER DE VILEBREQUIN **BROWN**	6
3	PAF25-05010302-2	62Y-11416-10	COJINETE BANCADA **BLACK**	MAIN BEARING **BLACK**	CUSCINETTO **BLACK**	PALIER DE VILEBREQUIN **BLACK**	6
4	PAF25-05000026	90170-35M47	TUERCA	LOCK NUT	DADO	ÉCROU	1
5	PAF25-05020301	65W-11642-11	PISTÓN, CONTRA	PISTON, BALANCE	PISTONE, CONTRO	PISTON D'EQUILIBRAGE	1
6	PAF25-05020310	65W-11665-00	BIELA, CONTRO	CON-ROD ASSY, BALANCE	BIELLA, CONTRO	BIELLE D'EQUILIBRAGE	1
7	PAF25-05020003	93102-43M42	RETÉN	OIL SEAL	PARAOLIO	JOINT SPI	1
8	PAF25-05020001	65W-11411-01	CIGÜEÑAL	CRANK ASSY	ALBERO MOTORE	VILEBREQUIN	1
9	PAF25-05020203-1	62Y-11656-00	COJINETE BIELA	BEARING, CONNECTING ROD	CUSCINETTO BIELLA	PALIER DE BIELLE	2
9	PAF25-05020203-2	62Y-11656-00	COJINETE BIELA	BEARING, CONNECTING ROD	CUSCINETTO BIELLA	PALIER DE BIELLE	2
10	PAF4-04000019	90280-04M06	CUÑA	KEY WOODRUFF	CHIAVETTA	CLAVETTE	1
11	PAF25-05020204	62Y-11654-00	TORNILLO	BOLT, CONNECTING ROD	VITE	VIS	2
12	PAF25-05020200	67C-11650-00	BIELA	CONNECTING ROD	BIELLA	BIELLE	2
13	PAF25-05020106	93450-17129	CLIP	CIRCLIP	CLIP	CIRCLIP	4
14	PAF25-05020105	62Y-11633-00	PIN, PISTÓN	PIN, PISTON	SPINOTTO PISTONE	AXE DE PISTON	2
15	PAF25-05020101	65W-11631-00-96	PISTÓN	PISTON	PISTONE	PISTON	2
16	REC67C-11603-00	67C-11603-00	KIT SEGMENTOS DE PISTÓN	PISTON RING KIT	KIT FASCIA PISTONE	KIT SEGMENTS	2
17	PAF25-05020100	65W-11631-00-96	PISTÓN COMPLETO	PISTON ASSY	PISTONE COMPLETO	PISTON COMPLÈTE	2
18	PAGB/T5782-M6X125	97013-06035	TORNILLO	BOLT	VITE	VIS	4
19	PAGB/T97.1-8	66M-11328-00	ARANDELA	WASHER , PLATE	RONDELLA	RONDELLE	4
20	PAF25-05050400	65W-13300-00	BOMBA ACEITE COMPLETA	OIL PUMP ASSY	POMPA DELL'OLIO COMPLETA	POMPE À HUILE COMPLÈTE	1
21	PAF25-05050014	93210-14515	TÓRICA **B**	O-RING **B**	O-RING **B**	JOINT TORIQUE **B**	1
22	PAF25-05050013	93210-12MG9	TÓRICA **A**	O-RING **A**	O-RING **A**	JOINT TORIQUE **A**	1
23	PAF25-05050015	93210-33MH2	TÓRICA **C**	O-RING **C**	O-RING **C**	JOINT TORIQUE **C**	1
24	PAF25-05050200	65W-12171-10	ÁRBOL DE LEVAS	CAMSHAFT ASSY	ALBERO A CAMME	ARBRE À CAMES	1
25	PAF25-05050016	93605-14143	PIN CENTRADOR	HOLLOW PIN	SPINOTTO DI CENTRAGGIO	PIN DE CENTRAGE	1
26	PAF25-05050021	93102-37M40	RETÉN	OIL SEAL	PARAOLIO	JOINT SPI	1
27	PAF25-05050017	65W-11537-01	POLEA DE CORREA	BELT PULLEY, DRIVEN	PULEGGIA CINGHIA	POULIE DE COURROIE	1
28	PAF25-05050018	90201-10M06	ARANDELA	WASHER, PLATE	RONDELLA	RONDELLE	1
29	PAGB/T97.1-8	97595-06520	ARANDELA	WASHER, PLATE	RONDELLA	RONDELLE	1
30	REC65W-46241-00	65W-46241-00	CORREA DISTRIBUCIÓN	BELT, TIMING	CINGHIA DISTRIBUZIONE	COURROIE DISTRIBUTION	1
31	PAF25-05000022	65W-11476-00	MUELLE	BUSH, SPRING	MOLLA	RESSORT	1
32	PAF25-05000021	65W-11536-10	ENGRANAJE DE DISTRIBUCIÓN	BELT PULLEY, TIMING	PULEGGIA DE DISTRIBUZIONE	POULIE DE DISTRIBUTION	1
33	PAF25-05050300	65W-12151-00	BALANCÍN COMPLETO	ROCKET ASSY	BILANCERE COMPLETO	CULBUTEUR COMPLÈTE	4
34	PAF25-05050002	62Y-12121-00	VÁLVULA ESCAPE	VALVE, EXHAUST	VALVOLA SCARICO	SOUPAPE D'ECHAPPEMENT	2
35	PAF25-05050001	67C-12111-00	VÁLVULA ADMISIÓN	VALVE, INTAKE	VALVOLA ASPIRAZIONE	SOUPAPE D'ADMISSION	2
36	PAF25-05050003	62Y-12116-00	ARANDELA ASIENTO	SEAT, VALVE SPRING	RONDELLA BASAMENTO	SIEGE RESSORT DE SOUPAPE	4
37	PAF166-010003	51Y-12119-00	RETÉN DE ACEITE	OIL SEAL	PARAOLIO	JOINT D'HUILE	4
38	PAF25-05050005	51Y-12114-00	MUELLE DE VÁLVULA	SPRING, VALVE STEM	MOLLA DI VALVOLA	RESSORT DE SOUPAPE	4
39	PAF15-07040006	30X-12117-00	RETÉN RESORTE	SPRING, VALVE RETAINER	VALVOLA DI RITEGNO	JOINT DE RESSORT	4
40	PAF15-07040007	30X-12118-00	SEGURO DE VÁLVULA	CLAMP, VALVE	BLOCCAGGIO DI VALVOLA	CLAVETTE DE SOUPAPE	8
41	PAF15-07040303	62Y-12159-00	TORNILLO REGULADOR	SCREW, VALVE ADJUSTING	VITE REGOLATORE	VIS POINTEAU	4
42	PAF15-07040304	62Y-12158-00	TUERCA	NUT	GHIERA	ÉCROU	4
43	PAF25-05050301	65W-12151-00	BALANCÍN	VALVE ROCKER	BILANCERE	CULBUTEUR	4
44	PAF25-05050008	65W-12146-00	EJE DE BALANCÍN	SHAFT, ROCKER	ASSE BILANCERE	AXE DE CULBUTEUR	1
45	PAF25-05050009	62Y-12238-00	PLETINA	PLATE, BOLT STOPPER	PIASTRINA	PLAQUE	2
46	PAF25-05050011	62Y-12216-00	RESORTE	SPRING	MOLLA	RESSORT	1
47	PAF25-05050012	62Y-12231-00	PLETINA	PLATE B, BOLT STOPPER	PIASTRINA	PLAQUE	1
48	PAF25-05050019	90109-08M63	TORNILLO	BOLT	VITE	VIS	3

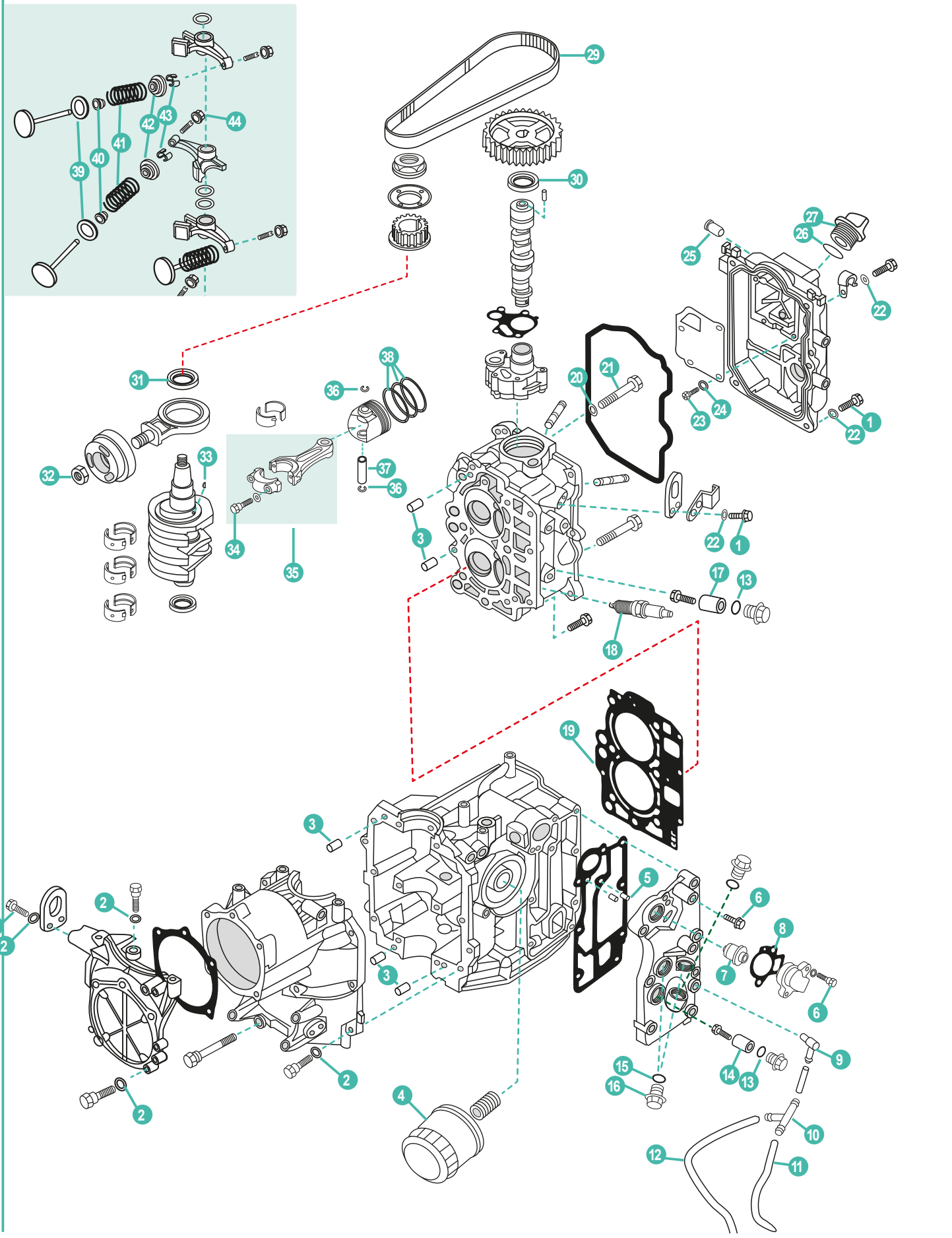
39
40
41
42
43
44
29
30
31
32
33
34
35
36
37
38
20
21
22
23
24
25
26
27
1
3
17
13
18
19
2
5
6
7
8
9
14
15
16
4
10
11
12

	REF	OEM					UN.
1	PAGB/T5783-M6X20	97095-06020	TORNILLO	SCREW	VITE	VIS	9
2	PAGB/T97.1-6	92995-06600	ARANDELA	WASHER	RONDELLA	RONDELLE	16
3	REC93606-12019	93606-12019	PIN CENTRADOR	HOLLOW PIN	SPINOTTO DI CENTRAGGIO	PIN DE CENTRAGE	5
4	REC5GH-13440-60	5GH-13440-20	FILTRO ACEITE	OIL FILTER	FILTRO DELL'OLIO	FILTRE À HUILE	1
5	PAF25-04000007	93604-10M03	PIN CENTRADOR	HOLLOW PIN	SPINOTTO DI CENTRAGGIO	PIN DE CENTRAGE	2
6	PAGB/T5783-M6X30	90119-06MA5	TORNILLO	SCREW	VITE	VIS	8
7	PAF15-07000031	6G8-12411-03	TERMOSTATO	THERMOSTAT	TERMOSTATO	THERMOSTAT	1
8	PAF15-07010022	62Y-12414-00	JUNTA TAPA TERMOSTATO	GASKET, THERMOSTAT COVER	GUARNIZIONE COPERCHIO TERMOSTATO	JOINT COUVERCLE DE THERMOSTAT	1
9	PAF15-04000005	676-11372-00	NIPLE DE MANGUERA	NIPPLE	TUBO	RACCORD D'EAU	1
10	PAF15-05000011	688-24378-00	CONECTOR DE 3 VÍAS	THREE-WAY PIPE	CONNETTORE T	TE	1
11	PAF25-03000011	90445-09251	TUBO DE AGUA	WATER TUBE	TUBO DELL'ACQUA	DURITE D'EAU	1
12	PAF25-03000009	90445-09104	TUBO DE AGUA	WATER TUBE	TUBO DELL'ACQUA	DURITE D'EAU	1
13	PAGB/T3452.1-13X2	93210-13M63	TÓRICA	O-RING	O-RING	JOINT TORIQUE	1
14	CM6G8-11325-00A	6G8-11325-00	ÁNODO	ANODE	ANODO	ANODE	1
15	PAF15-04000003	90430-14115	TÓRICA	O-RING	O-RING	JOINT TORIQUE	2
16	PAF15-04000002	90340-14M06	TORNILLO DRENAJE	BOLT, DISCHARGING OIL	VITE DRENAGGIO	BOUCHON DE VIDANGE	2
17	CM6BL-11325-00A	6BL-11325-00	ÁNODO	ANODE	ANODO	ANODE	2
18	NGKDPR6EB-9	94702-00418	BUJÍA	SPARK PLUG	CANDELE	BOUGIE	2
19	REC6BL-11181-00	6BL-11181-00	JUNTA CULATA	GASKET, CYLINDER HEAD	GUARNIZIONE TESTATA	JOINT DE CULASSE	1
20	PAF25-05050007	90430-06014	JUNTA	GASKET	GUARNIZIONE	JOINT	1
21	PAF25-05050006	90109-06M65	PERNO	STUD	BULLONE	BOULON	1
22	PAGB/T96-6	92995-06600	ARANDELA	WASHER	RONDELLA	RONDELLE	8
23	PAGB/T818-M4X10	98507-04010	TORNILLO	SCREW	VITE	VIS	4
24	PAGB/T97.1-4	92907-04600	ARANDELA	WASHER	RONDELLA	RONDELLE	4
25	PAF20-05040005	62Y-14485-00	PIPA DE AGUA	PIPE, WATER	TUBO	RACCORD TUYAU D'EAU	1
26	PAJASOF40431-025	93210-24M79	TÓRICA	O-RING	O-RING	JOINT TORIQUE	1
27	PAF15-07050004	6G8-15363-00	TAPÓN ACEITE	PLUG, OIL	TAPPO OLIO	BOUCHON REMPLISSAGE D'HUILE	1
28	PAF15-07010015	90465-08M83	BRIDA	CLAMP	FLANGIA	COLLIER	1
29	REC6C5-46241-00	6C5-46241-00	CORREA DISTRIBUCIÓN	BELT, TIMING	CINGHIA DISTRIBUZIONE	COURROIE DISTRIBUTION	1
30	PAF25-05050021	93102-37M40	RETÉN DE ACEITE	OIL SEAL	PARAOLIO	JOINT SPI	1
31	PAF25-05020003	93102-43M42	RETÉN DE ACEITE	OIL SEAL	PARAOLIO	JOINT SPI	1
32	PAF25-05000026	90170-20137	TUERCA	LOCK NUT	DADO	ÉCROU	1
33	PAGB/T1099-3X5X13	90280-03M01	CUÑA	KEY WOODRUFF	CHIAVETTA	CLAVETTE	1
34	PAF25-05020204	6C5-11654-00	TORNILLO	SCREW	VITE	VIS	2
35	PAF25-05020200	6C5-11650-00	BIELA COMPELTA	ROD, CONNECTING ASSY	BIELLA COMPLETA	BIELLE COMPLÈTE	2
36	PAF25-05020106	93450-17129	CIRCLIP	CIRCLIP	CIRCLIP	CIRCLIP	4
37	PAF25-05020105	62Y-11633-00	PIN, PISTÓN	PIN, PISTON	SPINOTTO PISTONE	AXE DE PISTON	2
38	REC67C-11603-00	67C-11603-00	KIT SEGMENTOS DE PISTÓN	PISTON RING KIT	KIT FASCIA PISTONE	KIT SEGMENTS	2
39	PAF25-05050003	62Y-12116-00	ARANDELA ASIENTO	SEAT, VALVE SPRING	RONDELLA BASAMENTO	SIEGE RESSORT DE SOUPAPE	4
40	PA166F-010003	51Y-12119-00	RETÉN DE ACEITE	OIL SEAL	PARAOLIO	JOINT D'HUILE	4
41	PAF25-05050005	51Y-12114-00	MUELLE DE VÁLVULA	SPRING, VALVE STEM	MOLLA DI VALVOLA	RESSORT DE SOUPAPE	4
42	PAF15-07040006	30X-12117-00	RETÉN RESORTE	SPRING, VALVE RETAINER	VALVOLA DI RITEGNO	JOINT DE RESSORT	4
43	PAF15-07040007	30X-12118-00	SEGURO DE VÁLVULA	CLAMP, VALVE	BLOCCAGGIO DI VALVOLA	CLAVETTE DE SOUPAPE	8
44	PAF15-07040304	62Y-12158-00	TUERCA	NUT	GHIERA	ÉCROU	1



REC10W30U3
REC10W30U6
REC10W40U3
REC10W40U6

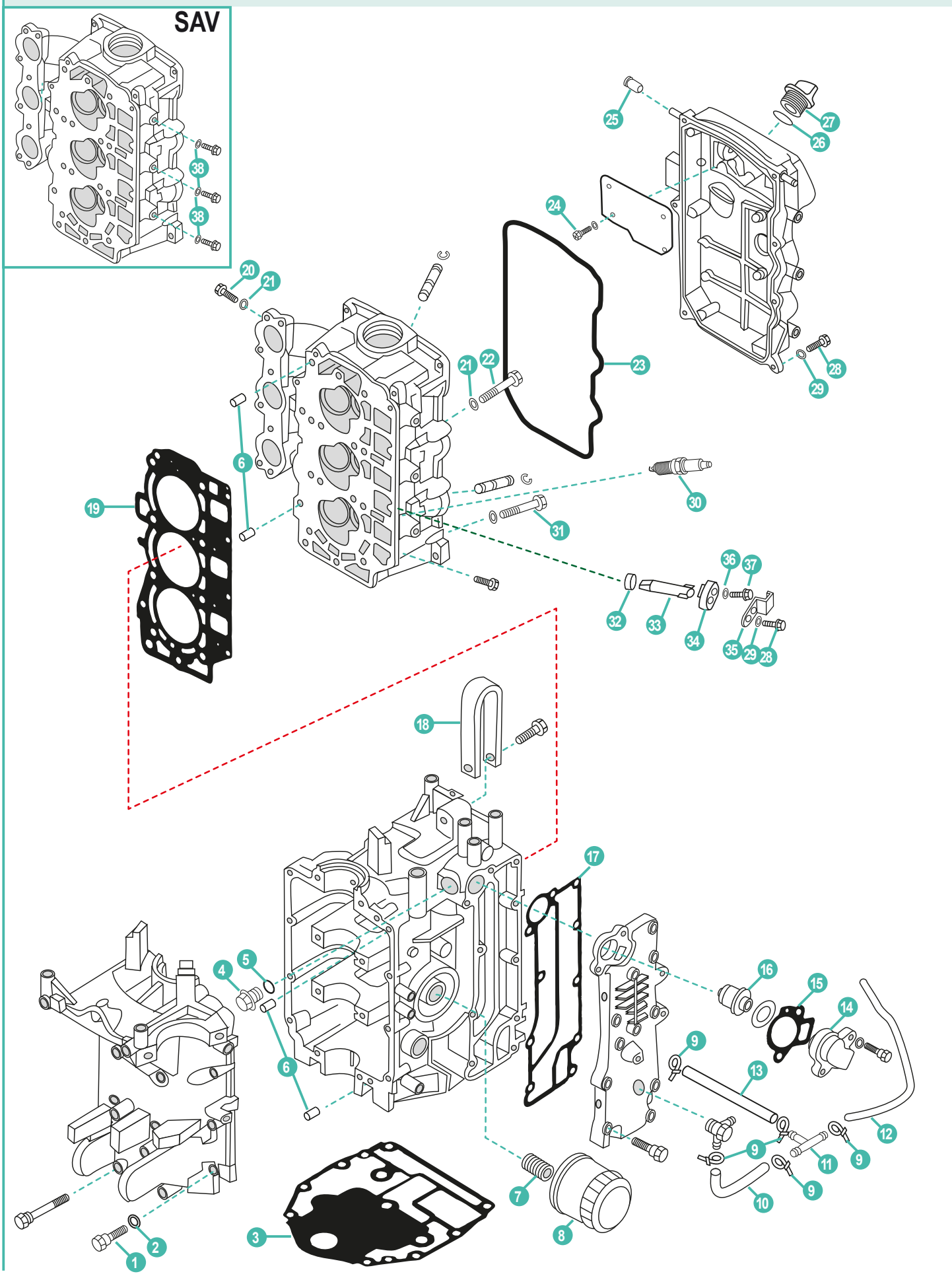
SAV
38
38
25
27
26
24
20
21
21
22
23
28
29
6
19
30
31
36
37
32
33
34
35
29
28
18
17
5
4
6
16
15
14
9
13
12
9
11
9
10
7
8
3
2
1

	REF	OEM					UN.
1	PAF15-07000030	97013-06035	TORNILLO	STUD	BULLONE	BOULON	8
2	PAGB/T97.1-6	92903-06600	ARANDELA	WASHER	RONDELLA	RONDELLE	8
3	REC67C-11351-00	67C-11351-01	JUNTA BASE MOTOR	GASKET ENGINE	GUARNIZIONE BASE MOTORE	JOINT MOTEUR	1
4	PAF15-04000002	90340-14M06	TORNILLO DRENAJE	BOLT, DISCHARGING OIL	VITE DRENAGGIO	BOUCHON DE VIDANGE	1
5	PAF15-04000003	90430-14115	TÓRICA	O-RING	O-RING	JOINT TORIQUE	1
6	PAF25-00000014	99530-08012	PIN CENTRADOR	HOLLOW PIN	SPINOTTO DI CENTRAGGIO	PIN DE CENTRAGE	4
7	PAF15-07010003	90401-20M00	PERNO	STUD	BULLONE	BOULON	1
8	REC5GH-13440-00	5GH-13440-00	FILTRO ACEITE	OIL FILTER	FILTRO DELL'OLIO	FILTRE À HUILE	1
9	PAHT-2.5X60	90465-11M10	BRIDA	CLAMP	FLANGIA	COLLIER	5
10	PAF25-03000008	90445-09068	TUBO DE AGUA	WATER TUBE	TUBO DELL'ACQUA	DURITE D'EAU	1
11	PAF15-05000011	688-24378-00	CONECTOR DE 3 VÍAS	THREE-WAY PIPE	CONNETTORE T	TE	1
12	PAF15-05000014	90445-09104	TUBO DE AGUA	WATER TUBE	TUBO DELL'ACQUA	DURITE D'EAU	1
13	PAF25-03000009	90445-09095	TUBO DE AGUA	WATER TUBE	TUBO DELL'ACQUA	DURITE D'EAU	1
14	PAF15-07010021	6H3-12413-00-1S	TAPA TERMOSTATO	COVER, THERMOSTAT	COPERCHIO TERMOSTATO	COUVERCLE DE THERMOSTAT	1
15	PAF15-07010022	62Y-12414-00	JUNTA TAPA TERMOSTATO	GASKET, THERMOSTAT COVER	GUARNIZIONE COPERCHIO TERMOSTATO	JOINT COUVERCLE DE THERMOSTAT	1
16	PAF15-07000031	6G8-12411-03	TERMOSTATO	THERMOSTAT	TERMOSTATO	THERMOSTAT	1
17	REC67C-41114-00	67C-41114-10	JUNTA EXTERIOR, TAPA DE ESCAPE	GASKET, EXHAUST OUTER COVER	GUARNIZIONE ESTERIORE, COPERCHIO SCARICO	JOINT DE COUVERCLE EXT ECHAPPEMENT	1
18	PAF25-05010106	65W-11119-00	SOPORTE	HANGER, ENGINE	SUPPORTO	CROCHET LEVAGE MOTEUR	1
19	REC67C-11181-01	67C-11181-01	JUNTA CULATA	GASKET, CYLINDER HEAD	GUARNIZIONE TESTATA	JOINT DE CULASSE	1
20	PAGB/T5783-M6X10	97095-06010	TORNILLO	SCREW	VITE	VIS	3
21	PAF25-05050007	90430-06014	JUNTA	GASKET	GUARNIZIONE	JOINT	3
22	PAF25-05050006	90109-06M65	PERNO	STUD	BULLONE	BOULON	1
23	REC67C-11356-00	67C-11356-00	JUNTA TAPA	GASKET, COVER	GUARNIZIONE COPERCHIO	JOINT COUVERCLE	1
24	PAGB/T818-M4X10	98507-04010	TORNILLO	SCREW	VITE	VIS	4
25	PAF40-05070002	62Y-14485-00	PIPA DE AGUA	PIPE, WATER	TUBO	RACCORD TUYAU D'EAU	1
26	PAJASOF40431-025	93210-24M79	TÓRICA	O-RING	O-RING	JOINT TORIQUE	1
27	PAF15-07050004	6G8-15363-00	TAPÓN ACEITE	PLUG, OIL	TAPPO OLIO	BOUCHON REMPLISSAGE D'HUILE	1
28	PAGB/T5783-M6X20	97095-06020	TORNILLO	SCREW	VITE	VIS	7
29	PAGB/T97.1-6	92995-06600	ARANDELA	WASHER	RONDELLA	RONDELLE	7
30	NGKDPR6EA-9	94701-00375	BUJÍA	SPARK PLUG	CANDELA	BOUGIE	3
31	PAF25-05000002	90119-09M00	TORNILLO	SCREW	VITE	VIS	8
32	PAF15-07010009	66M-11328-00	TAPÓN	PLUG	TAPPO	BOUCHON	3
33	CM62Y-11325-00A	62Y-11325-00	ÁNODO	ANODE	ANODO	ANODE	3
34	PAF15-07010011	66M-11327-00-94	TAPA ÁNODO	COVER, ANODE	COPERTURA ANODO	COUVERCLE D'ANODE	3
35	PAF15-07010012	66M-12535-00	PLETINA DEL ÁNODO	PLATE, ANODE	PIASTRA ANODO	PLAQUE D'ANODE	3
36	PAGB/T97.1-5	92995-05600	ARANDELA	WASHER	RONDELLA	RONDELLE	3
37	PAGB/T818-M5X12	97095-05012	TORNILLO	SCREW	VITE	VIS	3
38	PAF4-04000006	90430-08143	JUNTA	GASKET	GUARNIZIONE	JOINT	3

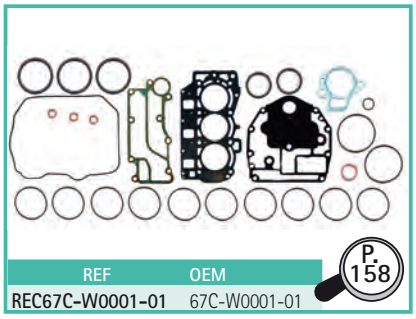

REF REC67C-W0001-01 OEM 67C-W0001-01

P. 158



P. 40

REC10W30U3
REC10W30U6
REC10W40U3
REC10W40U6

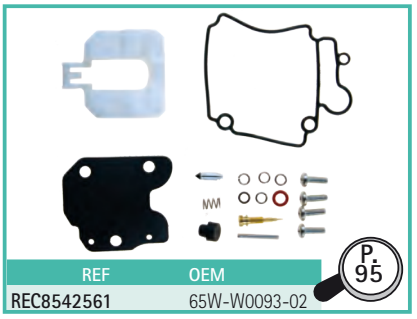

REF REC8542561 OEM 65W-W0093-02

P. 95

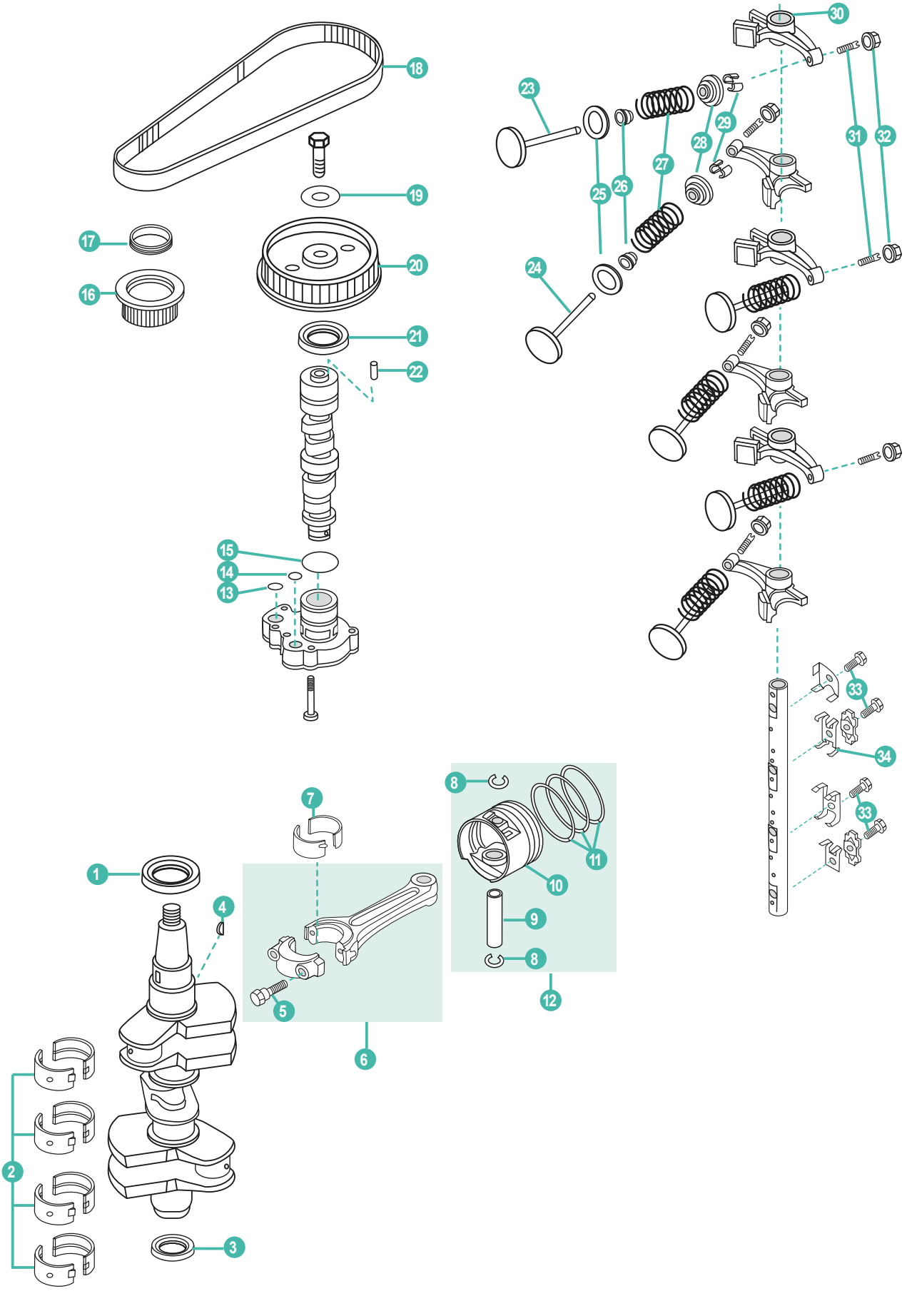
1
2
3
4
5
6
7
8
9
10
11
12
13
14
15
16
17
18
19
20
21
22
23
24
25
26
27
28
29
30
31
32
33
34
33

	REF	OEM					UN.
1	PAF25-05020003	93102-43M42	RETÉN DE ACEITE	OIL SEAL	PARAOLIO	JOINT SPI	1
2	PAF25-05010302-1	62Y-11416-00	COJINETE BANCADA **BROWN**	MAIN BEARING **BROWN**	CUSCINETTO **BROWN**	PALIER DE VILEBREQUIN **BROWN**	8
	PAF25-05010302-2	62Y-11416-10	COJINETE BANCADA **BLACK**	MAIN BEARING **BLACK**	CUSCINETTO **BLACK**	PALIER DE VILEBREQUIN BLACK	8
3	PAF25-05020002	93102-35M47	RETÉN DE ACEITE	OIL SEAL	PARAOLIO	JOINT SPI	1
4	PAF25-05000024	90280-04M06	CUÑA	KEY WOODRUFF	CHIAVETTA	CLAVETTE	1
5	PAF25-05020204	62Y-11654-00	TORNILLO	SCREW	VITE	VIS	2
6	PAF25-05020200	62Y-11650-10	BIELA COMPLETA	ROD, CONNECTING ASSY	BIELLA COMPLETA	BIELLE COMPLÈTE	3
7	PAF25-05020203-1	62Y-11656-00	COJINETE DE BIELA **BROWN**	BEARING, CONNECTING ROD **BROWN**	CUSCINETTO BIELLA **BROWN**	PALIER DE BIELLE **BROWN**	6
	PAF25-05020203-2	62Y-11656-10	COJINETE DE BIELA **BLACK**	BEARING, CONNECTING ROD **BLACK**	CUSCINETTO BIELLA **BLACK**	PALIER DE BIELLE **BLACK**	6
8	PAF25-05020106	93450-17129	CIRCLIP	CIRCLIP	CIRCLIP	CIRCLIP	6
9	PAF25-05020105	62Y-11633-00	PIN, PISTÓN	PIN, PISTON	SPINOTTO PISTONE	AXE DE PISTON	3
10	PAF25-05020101	65W-11631-00-96	PISTÓN	PISTON	PISTONE	PISTON	3
11	REC67C-11603-00	67C-11603-00	KIT SEGMENTOS DE PISTÓN	PISTON RING KIT	KIT FASCIA PISTONE	KIT SEGMENTS	3
12	PAF25-05020100	65W-11631-00-96	KIT PISTÓN	PISTON KIT	KIT PISTONE	KIT PISTON	3
13	PAF25-05050014	93210-14515	TÓRICA	O-RING	O-RING	JOINT TORIQUE	1
14	PAF25-05050013	93210-12MG9	TÓRICA	O-RING	O-RING	JOINT TORIQUE	1
15	PAF25-05050015	93210-33MH2	TÓRICA	O-RING	O-RING	JOINT TORIQUE	1
16	PAF25-05000021	65W-11536-10	ENGRANAJE DE DISTRIBUCIÓN	BELT PULLEY, TIMING	PULEGGIA DE DISTRIBUZIONE	POULIE DE DISTRIBUTION	1
17	PAF25-05000022	65W-11476-00	RESORTE	SPRING	MOLLA	RESSORT	1
18	REC65W-46241-00	65W-46241-00	CORREA DISTRIBUCIÓN	BELT, TIMING	CINGHIA DISTRIBUZIONE	COURROIE DISTRIBUTION	1
19	PAF25-05050018	90201-10M06	ARANDELA	WASHER	RONDELLA	RONDELLE	1
20	PAF40-05040006	67C-11537-01	POLEA DE CORREA	BELT PULLEY, DRIVEN	PULEGGIA CINGHIA	POULIE DE COURROIE	1
21	PAF25-05050021	93102-37M40	RETÉN DE ACEITE	OIL SEAL	PARAOLIO	JOINT SPI	1
22	PAF25-05050016	93605-14143	PIN CENTRADOR	HOLLOW PIN	SPINOTTO DI CENTRAGGIO	PIN DE CENTRAGE	1
23	PAF25-05050002	62Y-12121-00	VÁLVULA ESCAPE	VALVE, EXHAUST	VALVOLA SCARICO	SOUPAPE D'ECHAPPEMENT	3
24	PAF25-05050001	67C-12111-00	VÁLVULA ADMISIÓN	VALVE, INTAKE	VALVOLA ASPIRAZIONE	SOUPAPE D'ADMISSION	3
25	PAF25-05050003	62Y-12116-00	ARANDELA ASIENTO	SEAT, VALVE SPRING	RONDELLA BASAMENTO	SIEGE RESSORT DE SOUPAPE	6
26	PAPS2700.04.03	51Y-12119-00	RETÉN DE ACEITE	OIL SEAL	PARAOLIO	JOINT SPI	6
27	PAF25-05050005	51Y-12114-00	MUELLE DE VÁLVULA	SPRING, VALVE STEM	MOLLA DI VALVOLA	RESSORT DE SOUPAPE	6
28	PAF15-07040006	30X-12117-00	RETÉN RESORTE	SPRING, VALVE RETAINER	VALVOLA DI RITEGNO	JOINT DE RESSORT	6
29	PAF15-07040007	30X-12118-00	SEGURO DE VÁLVULA	CLAMP, VALVE	BLOCCAGGIO DI VALVOLA	CLAVETTE DE SOUPAPE	12
30	PAF25-05050301	65W-12151-00	BRAZO DE BALANCÍN	ARM, VALVE ROCKER	BILANCERE	CULBUTEUR	6
31	PAF15-07040303	62Y-12159-00	TORNILLO REGULADOR	SCREW, VALVE ADJUSTING	VITE REGOLATORE	VIS POINTEAU	6
32	PAF15-07040304	62Y-12158-00	TUERCA	LOCK NUT	DADO	ÉCROU	6
33	PAF25-05050019	90109-08M63	TORNILLO	SCREW	VITE	VIS	4
34	PAF25-05050011	62Y-12216-00	RESORTE	SPRING	MOLLA	RESSORT	1

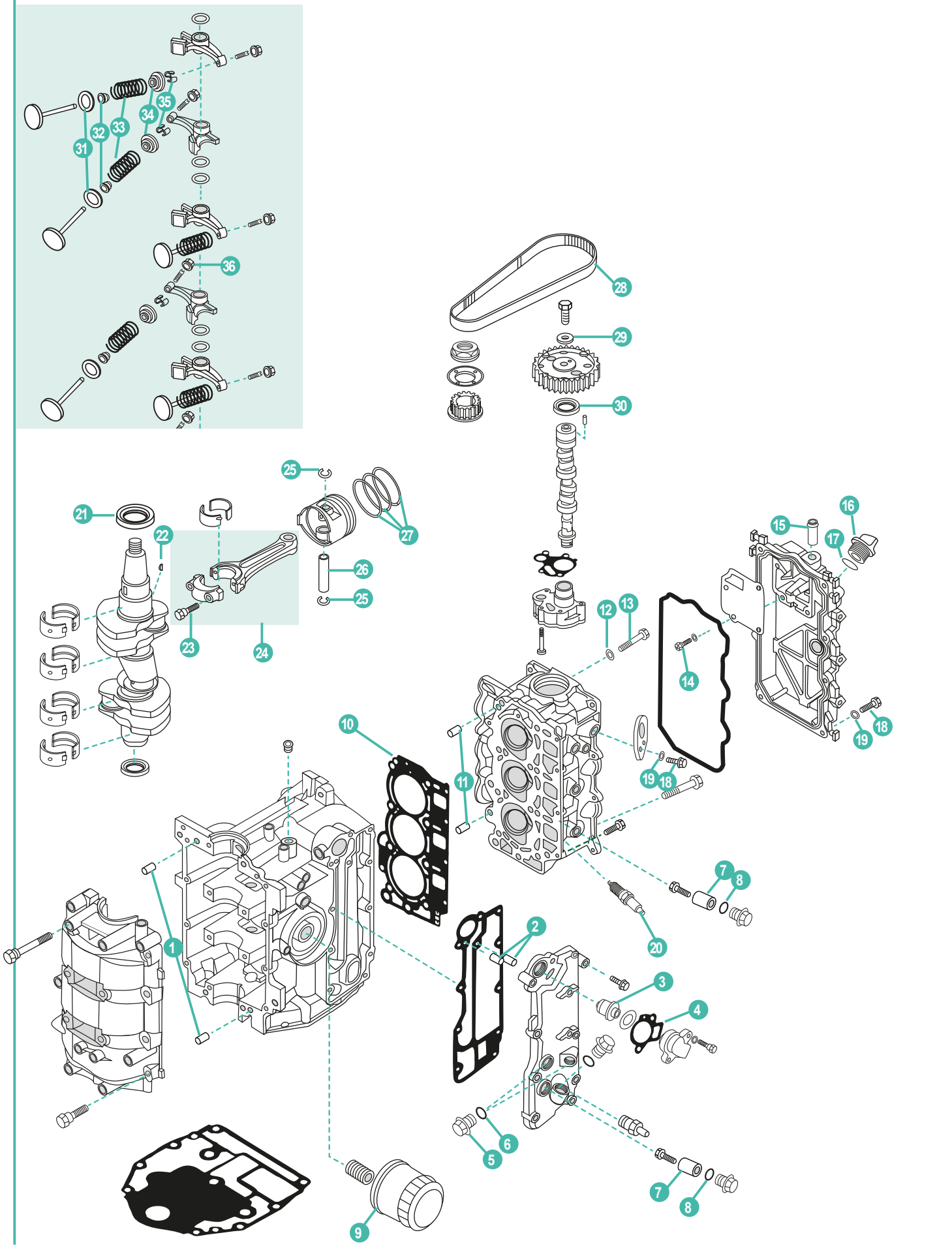
31
32
33
34
35
36
28
29
30
25
27
26
21
22
23
24
16
15
17
12
13
14
18
19
10
11
7
8
20
1
2
3
4
5
6
9

	REF	OEM					UN.
1	REC93606-12019	93606-12019	PIN CENTRADOR	HOLLOW PIN	SPINOTTO DI CENTRAGGIO	PIN DE CENTRAGE	4
2	PAF15-00000013	93604-10M03	PIN CENTRADOR	HOLLOW PIN	SPINOTTO DI CENTRAGGIO	PIN DE CENTRAGE	2
3	PAF15-07000031	6G8-12411-03	TERMOSTATO	THERMOSTAT	TERMOSTATO	THERMOSTAT	1
4	PAF15-07010022	62Y-12414-00	JUNTA TAPA TERMOSTATO	GASKET, THERMOSTAT COVER	GUARNIZIONE COPERCHIO TERMOSTATO	JOINT COUVERCLE DE THERMOSTAT	1
5	PAF15-04000002	90340-14M06	TORNILLO DRENAJE	BOLT, DISCHARGING OIL	VITE DRENAGGIO	VIS DE VIDANGE	2
6	PAF15-04000003	90430-14115	TÓRICA	O-RING	O-RING	JOINT TORIQUE	2
7	CM6G8-11325-00A	6G8-11325-00	ÁNODO	ANODE	ANODO	ANODE	2
8	PAGB/T3452.1-13X2	93210-13M63	TÓRICA	O-RING	O-RING	JOINT TORIQUE	5
9	REC5GH-13440-60	5GH-13440-50	FILTRO ACEITE	OIL FILTER	FILTRO DELL'OLIO	FILTRE À HUILE	1
10	REC6BG-11181-00	6BG-11181-00	JUNTA CULATA	GASKET, CYLINDER HEAD	GUARNIZIONE TESTATA	JOINT DE CULASSE	1
11	PAF25-00000014	99530-08012	PIN CENTRADOR	HOLLOW PIN	SPINOTTO DI CENTRAGGIO	PIN DE CENTRAGE	2
12	PAF25-05050007	90430-06014	JUNTA	GASKET	GUANIZIONE	JOINT	1
13	PAF25-05050006	90109-06M65	PERNO	STUD	BULLONE	BOULON	1
14	PAGB/T818-M4X10	98507-04010	TORNILLO	SCREW	VITE	VIS	4
15	PAF40-05070002	62Y-14485-00	PIPA DE AGUA	PIPE, WATER	TUBO	RACCORD TUYAU D'EAU	1
16	PAF15-07050004	6G8-15363-00	TAPÓN ACEITE	PLUG, OIL	TAPPO OLIO	BOUCHON DE REMPLISSAGE D'HUILE	1
17	PAF4-04000008	93210-24M79	TÓRICA	O-RING	O-RING	JOINT TORIQUE	1
18	PAGB/T5783-M6X20	97095-06020	PERNO	STUD	BULLONE	BOULON	9
19	PAGB/T97.1-6	92995-06600	ARANDELA	WASHER	RONDELLA	RONDELLE	9
20	NGKDPR6EB-9	94702-00418	BUJÍA	SPARK PLUG	CANDELA	BOUGIE	3
21	PAF25-05020003	93102-43M42	RETÉN DE ACEITE	OIL SEAL	PARAOLIO	JOINT D'HUILE	1
22	PAGB/T1099-3X5X13	90280-03017	CUÑA	KEY WOODRUFF	CHIAVETTA	CLAVETTE	1
23	PAF25-05020204	6C5-11654-00	TORNILLO	SCREW	VITE	VIS	2
24	PAF25-05020200	6C5-11650-10	BIELA COMPLETA	ROD, CONNECTING ASSY	BIELLA COMPLETA	BIELLE COMPLÈTE	3
25	PAF25-05020106	93450-17129	CIRCLIP	CIRCLIP	CIRCLIP	CIRCLIP	6
26	PAF25-05020105	62Y-11633-00	PIN, PISTÓN	PIN, PISTON	SPINOTTO PISTONE	AXE DE PISTON	3
27	REC67C-11603-00	67C-11603-00	KIT SEGMENTOS DE PISTÓN	PISTON RING KIT	KIT FASCIA PISTONE	KIT DE SEGMENTS	3
28	REC6C5-46241-00	6C5-46241-00	CORREA	BELT	CINGHIA	COURROIE DISTRIBUTION	1
29	PAF25-05050018	90201-10144	ARANDELA	WASHER	RONDELLA	RONDELLE	1
30	PAF25-05050021	93102-37M40	RETÉN DE ACEITE	OIL SEAL	PARAOLIO	JOINT D'HUILE	1
31	PAF25-05050003	62Y-12116-00	ARANDELA ASIENTO	SEAT, VALVE SPRING	RONDELLA BASAMENTO	SIEGE RESSORT DE SOUPAPE	6
32	PA166F-010003	51Y-12119-00	RETÉN DE ACEITE	OIL SEAL	PARAOLIO	JOINT D'HUILE	6
33	PAF25-05050005	51Y-12114-00	MUELLE DE VÁLVULA	SPRING, VALVE STEM	MOLLA DI VALVOLA	RESSORT DE SOUPAPE	6
34	PAF15-07040006	30X-12117-00	RETÉN RESORTE	SPRING, VALVE RETAINER	VALVOLA DI RITEGNO	JOINT DE RESSORT	6
35	PAF15-07040007	30X-12118-00	SEGURO DE VÁLVULA	CLAMP, VALVE	BLOCCAGGIO DI VALVOLA	CLAVETTE DE SOUPAPE	12
36	PAF15-07040304	62Y-12158-00	TUERCA	LOCK NUT	DADO	ÉCROU	1



REC10W30U3
REC10W30U6
REC10W40U3
REC10W40U6

4T STROKES F40D • F50F/H • F60C/T/F

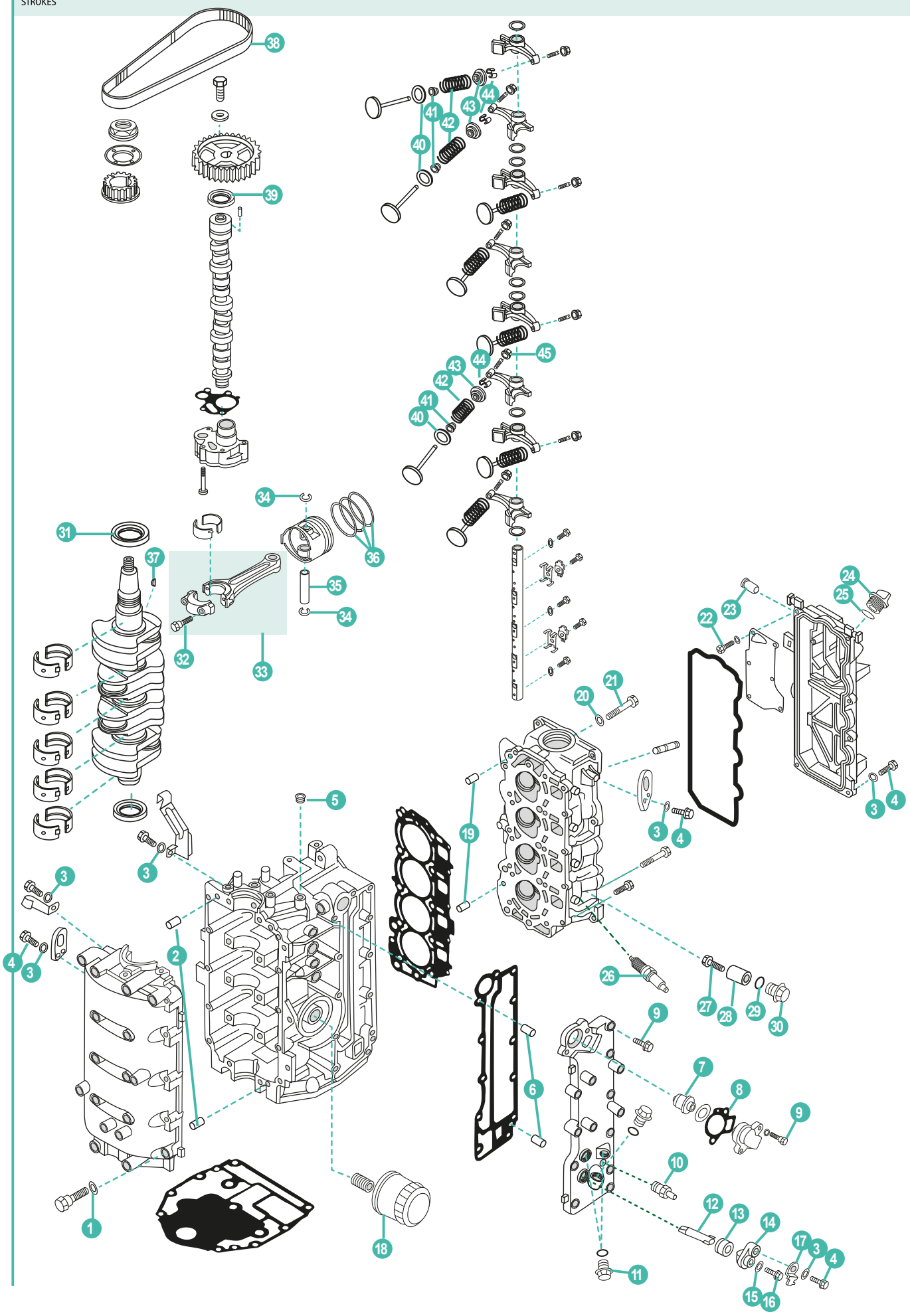

	REF	OEM					UN.
1	PAGB/T848-6	92903-06600	ARANDELA	WASHER	RONDELLA	RONDELLE	10
2	REC93606-12019	93606-12019	PIN CENTRADOR	HOLLOW PIN	SPINOTTO DI CENTRAGGIO	PIN DE CENTRAGE	4
3	PAGB/T97.1-6	92995-06600	ARANDELA	WASHER	RONDELLA	RONDELLE	14
4	PAGB/T5783-M6X20	97095-06020	PERNO	STUD	BULLONE	BOULON	12
5	PAF15-07010004	90344-51003	TAPÓN	CAP	TAPPO	BOUCHON	1
6	PAF25-04000007	93604-10M03	PIN CENTRADOR	HOLLOW PIN	SPINOTTO DI CENTRAGGIO	PIN DE CENTRAGE	2
7	PAF15-07000031	6G8-12411-03	TERMOSTATO	THERMOSTAT	TERMOSTATO	THERMOSTAT	1
8	REC6H3-12414-A1	62Y-12414-00	JUNTA TAPA TERMOSTATO	GASKET, THERMOSTAT COVER	GUARNIZIONE COPERCHIO TERMOSTATO	JOINT COUVERCLE DE THERMOSTAT	1
9	PAGB/T5782-M6X35	90119-06MA5	TORNILLO	SCREW	VITE	VIS	12
10	PAF25-05010113	62Y-12481-10	NIPLE DE MANGUERA	NIPPLE	TUBO	RACCORD D'EAU	1
11	PAF15-04000002	90340-14M06	TORNILLO DRENAJE	BOLT, DISCHARGING OIL	VITE DRENAGGIO	VIS DE VIDANGE	2
12	CM62Y-11325-00A	62Y-11325-00	ÁNODO	ANODE	ANODO	ANODE	1
13	PAF15-07010009	66M-11328-00	TAPÓN	CAP	TAPPO	BOUCHON	1
14	PAF15-07010011	66M-11327-00-94	TAPA ÁNODO	COVER, ANODE	COPERTURA ANODO	COUVERCLE DU ANODE	1
15	PAGB/T97.1-8	92995-05600	ARANDELA	WASHER	RONDELLA	RONDELLE	1
16	PAGB/T818-M5X12	97095-05012	PERNO	STUD	BULLONE	BOULON	1
17	PAF15-07010012	66M-12535-00	EMPAQUETADURA DE ÁNODO	PLATE, ANODE	PIASTRA ANODO	PLAQUE D'ANODE	14
18	REC5GH-13440-60	5GH-13440-20	FILTRO ACEITE	OIL FILTER	FILTRO DELL'OLIO	FILTRE À HUILE	1
19	PAF25-00000014	99530-08012	PIN CENTRADOR	HOLLOW PIN	SPINOTTO DI CENTRAGGIO	PIN DE CENTRAGE	2
20	PAF25-05050007	90430-06014	JUNTA	GASKET	GUARNICIONE	JOINT	1
21	PAF25-05050006	90109-06M65	PERNO	STUD	BULLONE	BOULON	1
22	PAGB/T818-M4X10	98507-04010	TORNILLO	SCREW	VITE	VIS	6
23	PAF40-05070002	62Y-14485-00	PIPA DE AGUA	PIPE, WATER	TUBO	RACCORD TUYAU D'EAU	1
24	PAF15-07050004	6G8-15363-00	RETÉN DE ACEITE	OIL SEAL	PARAOLIO	JOINT D'HUILE	1
25	PAF4-04000008	93210-24M79	TÓRICA	O-RING	O-RING	JOINT TORIQUE	1
26	NGKDPR6EB-9	94702-00418	BUJÍA	PLUG SPARK	CANDELA	BOUGIE	4
27	PAGB/T818-M5X25	97880-05025	TORNILLO	SCREW	VITE	VIS	4
28	CM6G8-11325-00A	6G8-11325-00	ÁNODO	ANODE	ANODO	ANODE	4
29	PAGB/T3452.1-13X2	93210-13M63	TÓRICA	O-RING	O-RING	JOINT TORIQUE	4
30	PAF20-05030009	6G8-11197-01	TAPÓN	CAP	TAPPO	BOUCHON	4
31	PAF25-05020003	93102-43M42	RETÉN DE ACEITE	OIL SEAL	PARAOLIO	JOINT SPI	1
32	PAF25-05020204	6C5-11654-00	TORNILLO	SCREW	VITE	VIS	2
33	PAF25-05020200	6C5-11650-00	BIELA COMPLETA	ROD, CONNECTING ASSY	BIELLA COMPLETA	BIELLE COMPLÈTE	4
34	PAF25-05020106	93450-17129	CIRCLIP	CIRCLIP	CIRCLIP	CIRCLIP	8
35	PAF25-05020105	62Y-11633-00	PIN, PISTÓN	PIN, PISTON	SPINOTTO PISTONE	AXE DE PISTON	4
36	REC67C-11603-00	67C-11603-00	KIT SEGMENTOS DE PISTÓN	PISTON RING KIT	KIT FASCIA PISTONE	KIT DE SEGMENTS	4
37	PAGB/T1099-3X5X13	90280-03M01	CHAVETA	KEY WOODRUFF	CHIAVETTA	CLAVETTE	1
38	REC6C5-46241-00	6C5-46241-00	CORREA DISTRIBUCIÓN	BELT, TIMING	CINGHIA DISTRIBUZIONE	COURROIE DISTRIBUTION	1
39	PAF25-05050021	93102-37M40	RETÉN DE ACEITE	OIL SEAL	PARAOLIO	JOINT SPI	1
40	PAF25-05050003	62Y-12116-00	ARANDELA ASIENTO	SEAT, VALVE SPRING	RONDELLA BASAMENTO	SIEGE RESSORT DE SOUPAPE	8
41	PAPS2700.04.03	51Y-12119-00	RETÉN DE ACEITE	OIL SEAL	PARAOLIO	JOINT SPI	8
42	PAF25-05050005	51Y-12114-00	MUELLE DE VÁLVULA	SPRING, VALVE STEM	MOLLA DI VALVOLA	RESSORT DE SOUPAPE	8
43	PAF15-07040006	30X-12117-00	RETÉN RESORTE	SPRING, VALVE RETAINER	VALVOLA DI RITEGNO	JOINT DE RESSORT	8
44	PAF15-07040007	30X-12118-00	SEGURO DE VÁLVULA	CLAMP, VALVE	BLOCCAGGIO DI VALVOLA	CLAVETTE DE SOUPAPE	16
45	PAF15-07040304	62Y-12158-00	TUERCA	LOCK NUT	DADO	ÉCROU	1



REC10W30U3
REC10W30U6
REC10W40U3
REC10W40U6

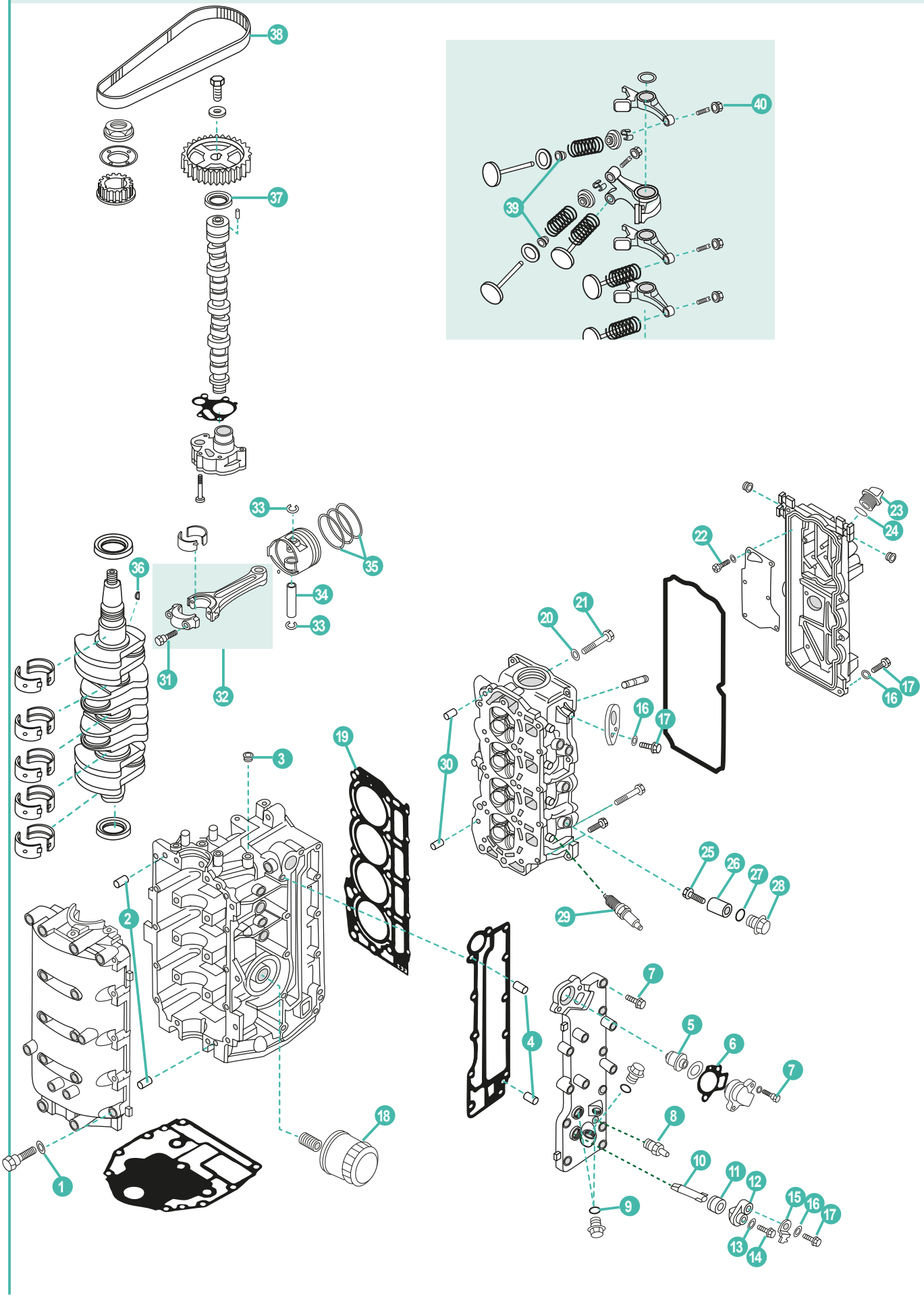
38
37
40
39
33
35
36
34
33
31
32
23
24
22
21
20
16
17
16
17
30
19
3
25
26
27
28
29
2
4
7
5
6
7
8
18
1
10
11
12
15
16
17
9
13
14

	REF	OEM					UN.
1	PAGB/T848-6	92903-06600	ARANDELA	WASHER	RONDELLA	RONDELLE	10
2	REC93606-12019	90606-12019	PIN CENTRADOR	HOLLOW PIN	SPINOTTO DI CENTRAGGIO	PIN DE CENTRAGE	4
3	PAF15-07010004	90344-51003	TAPÓN	CAP	TAPPO	BOUCHON	1
4	PAF25-04000007	93604-10M03	PIN CENTRADOR	HOLLOW PIN	SPINOTTO DI CENTRAGGIO	PIN DE CENTRAGE	2
5	PAF15-07000031	6G8-12411-03	TERMOSTATO	THERMOSTAT	TERMOSTATO	THERMOSTAT	1
6	REC6H3-12414-A1	62Y-12414-00	JUNTA TAPA TERMOSTATO	GASKET, THERMOSTAT COVER	GUARNIZIONE COPERCHIO TERMOSTATO	JOINT COUVERCLE DE THERMOSTAT	1
7	PAGB/T5782-M6X35	90119-06MA5	ARANDELA	WASHER	RONDELLA	RONDELLE	12
8	PAF25-05010113	62Y-12481-10	NIPLE DE MANGUERA	NIPPLE	TUBO	RACCORD D'EAU	1
9	PAF15-04000002	90340-14M06	TORNILLO DRENAJE	BOLT, DISCHARGING OIL	VITE DRENAGGIO	VIS DE VIDANGE	2
10	CM62Y-11325-00A	62Y-11325-00	ÁNODO	ANODE	ANODO	ANODE	1
11	PAF15-07010009	66M-11328-00	TAPÓN	CAP	TAPPO	BOUCHON	1
12	PAF15-07010011	66M-11327-00-94	TAPA ÁNODO	COVER, ANODE	COPERTURA ANODO	COUVERCLE DU ANODE	1
13	PAGB/T97.1-8	92995-05600	ARANDELA	WASHER	RONDELLA	RONDELLE	1
14	PAGB/T818-M5X12	97095-05012	PERNO	STUD	BULLONE	BOULON	1
15	PAF15-07010012	66M-12535-00	EMPAQUETADURA DE ÁNODO	PLATE, ANODE	PIASTRA ANODO	PLAQUE D'ANODE	1
16	PAGB/T97.1-6	92995-06600	ARANDELA	WASHER	RONDELLA	RONDELLE	1
17	PAGB/T5783-M6X20	97095-06020	PERNO	STUD	BULLONE	BOULON	3
18	REC5GH-13440-60	5GH-13440-50	FILTRO ACEITE	OIL FILTER	FILTRO DELL'OLIO	FILTRE À HUILE	1
19	REC6CJ-11181-00	6CJ-11181-00	JUNTA CULATA	GASKET, CYLINDER HEAD	GUARNIZIONE TESTATA	JOINT DE CULASSE	1
20	PAF25-05050007	90430-06014	JUNTA	GASKET	GUANIZIONE	JOINT	1
21	PAF25-05050006	90109-06M65	PERNO	STUD	BULLONE	BOULON	1
22	PAGB/T818-M4X10	98507-04010	TORNILLO	SCREW	VITE	VIS	6
23	PAF15-07050004	6G8-15363-00	TAPÓN ACEITE	PLUG, OIL	TAPPO OLIO	BOUCHON REMPLISSAGE D'HUILE	1
24	PAF4-04000008	93210-24M79	TÓRICA	O-RING	O-RING	JOINT TORIQUE	1
25	PAGB/T818-M5X25	97880-05025	TORNILLO	SCREW	VITE	VIS	3
26	CM6G8-11325-00A	6G8-11325-00	ÁNODO	ANODE	ANODO	ANODE	3
27	PAGB/T3452.1-13X2	93210-13M63	TÓRICA	O-RING	O-RING	JOINT TORIQUE	3
28	PAF20-05030009	6G8-11197-01	TAPÓN	CAP	TAPPO	BOUCHON	3
29	NGKLKR7E	94702-00429	BUJÍA	SPARK PLUG	CANDELA	BOUGIE	4
30	PAF25-00000014	99530-08012	PIN CENTRADOR	HOLLOW PIN	SPINOTTO DI CENTRAGGIO	PIN DE CENTRAGE	2
31	PAF25-05020204	6C5-11654-00	TORNILLO	SCREW	VITE	VIS	2
32	PAF25-05020200	6C5-11650-10	BIELA COMPLETA	ROD, CONNECTING ASSY	BIELLA COMPLETA	BIELLE COMPLÈTE	4
33	PAF25-05020106	93450-17129	CIRCLIP	CIRCLIP	CIRCLIP	CIRCLIP	8
34	PAF25-05020105	62Y-11633-00	PIN, PISTÓN	PIN, PISTON	SPINOTTO PISTONE	AXE DE PISTON	4
35	REC67C-11603-00	67C-11603-00	KIT SEGMENTOS DE PISTÓN	PISTON RING KIT	KIT FASCIA PISTONE	KIT DE SEGMENTS	4
36	PAGB/T1099-3X5X13	90280-03M01	CHAVETA	KEY WOODRUFF	CHIAVETTA	CLAVETTE	1
37	PAF25-05050021	93102-37M40	RETÉN DE ACEITE	OIL SEAL	PARAOLIO	JOINT SPI	1
38	REC6C5-46241-00	6C5-46241-00	CORREA DISTRIBUCIÓN	BELT, TIMING	CINGHIA DISTRIBUZIONE	COURROIE DISTRIBUTION	1
39	PAPS2700.04.03	51Y-12119-00	RETÉN DE ACEITE	OIL SEAL	PARAOLIO	JOINT SPI	16
40	PAF15-07040304	62Y-12158-00	TUERCA	LOCK NUT	DADO	ÉCROU	8



REC10W30U3
REC10W30U6
REC10W40U3
REC10W40U6


10W30
10W40
P. 40
REC10W30U3
REC10W30U6
REC10W40U3
REC10W40U6

	REF	OEM					UN.
1	PAGB/T97.1-6	92903-06600	ARANDELA	WASHER	RONDELLA	RONDELLE	22
2	REC67C-11351-00	67C-11351-01	JUNTA BASE MOTOR	GASKET ENGINE	GUARNIZIONE BASE MOTORE	JOINT MOTEUR	1
3	REC93606-12019	93606-12019	PIN CENTRADOR	HOLLOW PIN	SPINOTTO DI CENTRAGGIO	PIN DE CENTRAGE	4
4	PAF15-04000002	90340-14M06	TORNILLO DRENAJE	BOLT, DISCHARGING OIL	VITE DRENAGGIO	VIS DE VIDANGE	1
5	PAF15-04000003	90430-14115	TÓRICA	O-RING	O-RING	JOINT TORIQUE	1
6	REC5GH-13440-00	5GH-13440-10	FILTRO ACEITE	OIL FILTER	FILTRO DELL'OLIO	FILTRE À HUILE	1
7	PAF15-07000031	6G8-12411-03	TÓRICA	O-RING	O-RING	JOINT TORIQUE	1
8	REC6H3-12414-A1	62Y-12414-00	JUNTA TAPA TERMOSTATO	GASKET, THERMOSTAT COVER	GUARNIZIONE COPERCHIO TERMOSTATO	JOINT COUVERCLE DE THERMOSTAT	1
9	PAF15-07010021	6H3-12413-00-1S	TAPA TERMOSTATO	COVER, THERMOSTAT	COPERCHIO TERMOSTATO	COUVERCLE DE THERMOSTAT	1
10	CM62Y-11325-00A	62Y-11325-00	ÁNODO	ANODE	ANODO	ANODE	2
11	PAF15-07010009	66M-11328-00	TAPÓN	CAP	TAPPO	BOUCHON	2
12	PAF15-07010011	66M-11327-00-94	TAPA ÁNODO	COVER, ANODE	COPERTURA ANODO	COUVERCLE DU ANODE	2
13	PAGB/T97.1-5	92995-05600	ARANDELA	WASHER	RONDELLA	RONDELLE	1
14	PAGB/T818-M5X12	97095-05012	PERNO	STUD	BULLONE	BOULON	1
15	PAF15-07010012	66M-12535-00	EMPAQUETADORA DE ÁNODO	PLATE, ANODE	PIASTRA ANODO	PLAQUE D'ANODE	1
16	PAGB/T5783-M6X20	97095-06020	PERNO	STUD	BULLONE	BOULON	12
17	PAF15-05000014	90445-09104	TUBO DE AGUA	WATER TUBE	TUBO DELL'ACQUA	DURITE D'EAU	1
18	PAHT-2.5X60	90465-11M10	BRIDA	CLAMP	FLANGIA	COLLIER	5
19	PAF15-05000011	688-24378-00	CONECTOR DE 3 VÍAS	THREE-WAY PIPE	CONNETTORE T	TE	1
20	PAF25-03000009	90445-09095	TUBO DE AGUA	WATER TUBE	TUBO DELL'ACQUA	DURITE D'EAU	1
21	PAF25-03000008	90445-09068	TUBO DE AGUA	WATER TUBE	TUBO DELL'ACQUA	DURITE D'EAU	1
22	PAHT-2.5X60	90465-11M10	BRIDA	CLAMP	FLANGIA	COLLIER	2
23	PAF25-00000014	99530-08012	PIN CENTRADOR	HOLLOW PIN	SPINOTTO DI CENTRAGGIO	PIN DE CENTRAGE	2
24	PAF25-05050007	90430-06014	JUNTA	GASKET	GUANIZIONE	JOINT	5
25	PAF25-05050006	90109-06M65	TORNILLO	SCREW	VITE	VIS	1
26	PAGB/T818-M4X10	98507-04010	TORNILLO	SCREW	VITE	VIS	4
27	PAF40-05070002	62Y-14485-00	PIPA DE AGUA	PIPE, WATER	TUBO	RACCORD TUYAU D'EAU	1
28	PAF15-07050004	6G8-15363-00	TAPÓN ACEITE	PLUG, OIL	TAPPO OLIO	BOUCHON REMPLISSAGE D'HUILE	1
29	PAJASOF40431-025	93210-24M79	TÓRICA	O-RING	O-RING	JOINT TORIQUE	1
30	PAF25-05000002	90119-09M00	TORNILLO CON ARANDELA	BOLT, FLANGE	VITE CON RONDELLA	VIS DE BRIDE	10
31	NGKDPR6EA-9	94701-00375	BUJÍA	SPARK PLUG	CANDELA	BOUGIE	4
32	PAF25-05020003	93102-43M42	RETÉN DE ACEITE	OIL SEAL	PARAOLIO	JOINT SPI	1
33	PAF4-04000019	90280-04M06	CUÑA	KEY WOODRUFF	CHIAVETTA	CLAVETTE	1
34	PAF25-05020204	6C5-11654-00	TORNILLO	SCREW	VITE	VIS	2
35	PAF25-05020200	6C5-11650-00	BIELA COMPLETA	ROD, CONNECTING ASSY	BIELLA COMPLETA	BIELLE COMPLÈTE	4
36	PAF25-05020106	93450-17129	CIRCLIP	CIRCLIP	CIRCLIP	CIRCLIP	8
37	PAF25-05020105	62Y-11633-00	PIN, PISTÓN	PIN, PISTON	SPINOTTO PISTONE	AXE DE PISTON	4
38	PAF25-05050014	93210-14515	PISTÓN, CONTRA	PISTON, BALANCE	PISTONE, CONTRO	PISTON D'EQUILIBRAGE	1
39	PAF25-05050013	93210-12MG9	TÓRICA	O-RING	O-RING	JOINT TORIQUE	1
40	PAF25-05050015	93210-33MH2	TÓRICA	O-RING	O-RING	JOINT TORIQUE	1
41	PAF25-05050016	93605-14143	PIN CENTRADOR	HOLLOW PIN	SPINOTTO DI CENTRAGGIO	PIN DE CENTRAGE	1
42	PAF25-05050021	93102-37M40	RETÉN DE ACEITE	OIL SEAL	PARAOLIO	JOINT SPI	1
43	PAF25-05050018	90201-10M06	ARANDELA	WASHER	RONDELLA	RONDELLE	1
44	REC62Y-46241-00	62Y-46241-00	CORREA DISTRIBUCIÓN	BELT, TIMING	CINGHIA DISTRIBUZIONE	COURROIE DISTRIBUTION	1
45	PAF25-05050002	62Y-12121-00	VÁLVULA ESCAPE	VALVE, EXHAUST	VALVOLA SCARICO	SOUPAPE D'ECHAPPEMENT	4
46	PAF25-05050003	62Y-12116-00	ARANDELA ASIENTO	SEAT, VALVE SPRING	RONDELLA BASAMENTO	SIEGE RESSORT DE SOUPAPE	8
47	PAPS2700.04.03	51Y-12119-00	RETÉN DE ACEITE	OIL SEAL	PARAOLIO	JOINT SPI	8
48	PAF25-05050005	51Y-12114-00	MUELLE DE VÁLVULA	SPRING, VALVE STEM	MOLLA DI VALVOLA	RESSORT DE SOUPAPE	8
49	PAF15-07040006	30X-12117-00	RETÉN RESORTE	SPRING, VALVE RETAINER	VALVOLA DI RITEGNO	JOINT DE RESSORT	8
50	PAF15-07040007	30X-12118-00	SEGURO DE VÁLVULA	CLAMP, VALVE	BLOCCAGGIO DI VALVOLA	CLAVETTE DE SOUPAPE	16
51	PAF15-07040304	62Y-12158-00	TUERCA	LOCK NUT	DADO	ÉCROU	8
52	PAF25-05050009	62Y-12238-00	PLACA TOPE DE PERNO	PLATE, BOLT STOPPER	PIASTRA DE VITE	PLAQUE DE FIXATION	2
53	PAF25-05050019	90109-08M63	TORNILLO	SCREW	VITE	VIS	5
54	PAF25-05050011	62Y-12216-00	RESORTE	SPRING	MOLLA	RESSORT	14
55	PAF25-05050012	62Y-12231-00	TOPE DE GUÍA	PLATE, BOLT STOPPER	PIASTRA DE GUIDA	PLAQUE DE FIXATION	2
56	PAF40-05040003	62Y-12279-00	PLACA EJE DE BALANCINES	FIXED PLATE B, ROCKER SHAFT	PIASTRA, ASSE BILANCERE	PLAQUE ARBRE DE CULBUTEUR	1

4T STROKES F80A/B/C • F100A/B/D • F115A

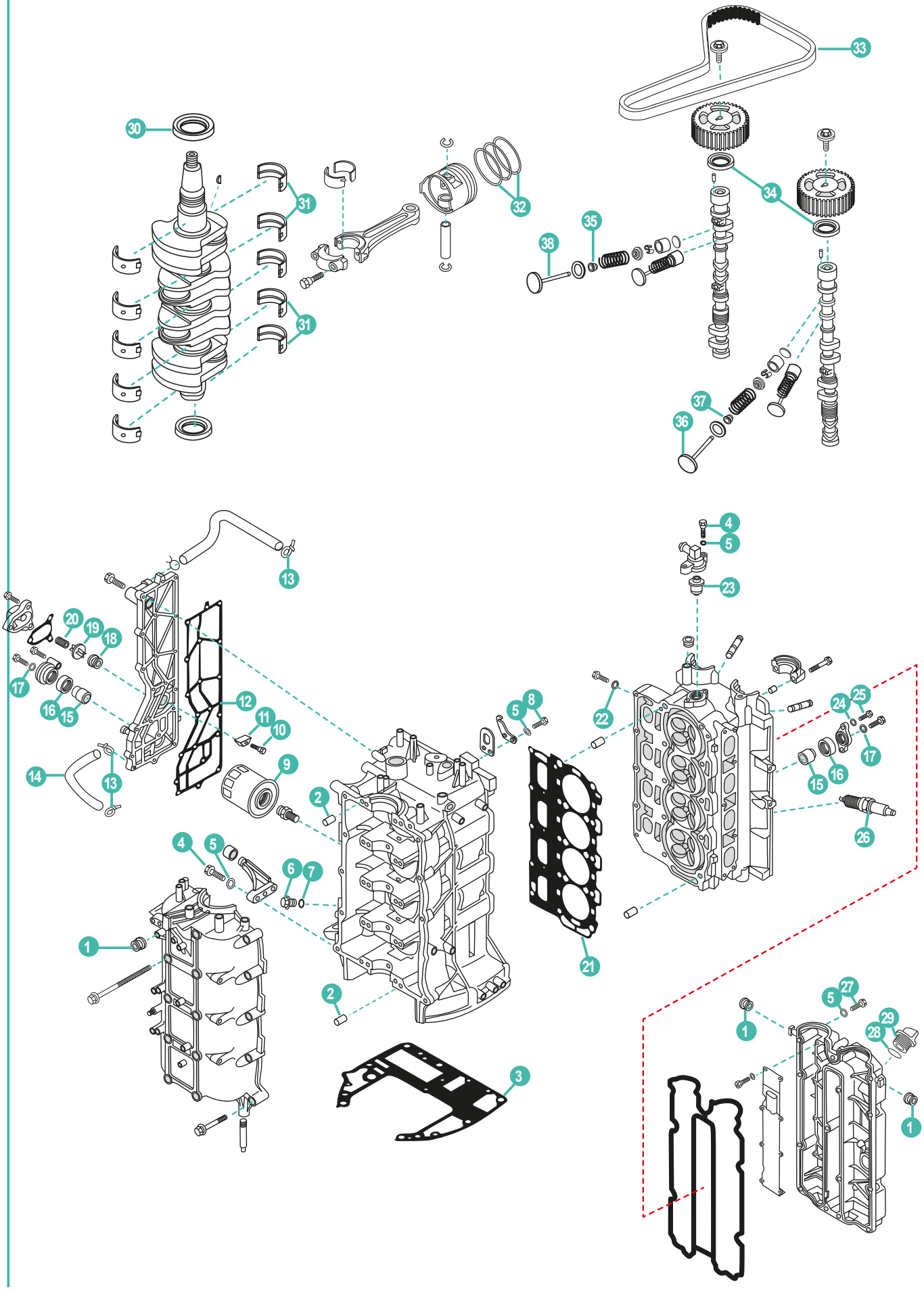

	REF	OEM					UN.
1	PAF15-07010027	90480-12072	TAPÓN	CAP	TAPPO	BOUCHON	3
2	REC93606-12019	93606-12019	PIN CENTRADOR	HOLLOW PIN	SPINOTTO DI CENTRAGGIO	PIN DE CENTRAGE	24
3	REC68V-11351-00	68V-11351-00	JUNTA BASE MOTOR	GASKET ENGINE	GUARNIZIONE BASE MOTORE	JOINT MOTEUR	1
4	PAGB/T5782-M6X25	97095-06025	TORNILLO	SCREW	VITE	VIS	6
5	PAGB/T97.1-6	92995-06600	ARANDELA	WASHER	RONDELLA	RONDELLE	24
6	PAF15-04000002	90340-14M06	TORNILLO DRENAJE	BOLT, DISCHARGING OIL	VITE DRENAGGIO	VIS DE VIDANGE	1
7	PAF15-04000003	90430-14115	TÓRICA	O-RING	O-RING	JOINT TORIQUE	1
8	PAGB/T5783-M6X20	97095-06020	TORNILLO	SCREW	VITE	VIS	4
9	REC5GH-13440-00	5GH-13440-00	FILTRO ACEITE	OIL FILTER	FILTRO DELL'OLIO	FILTRE À HUILE	1
10	PAGB/T820-M4X12	98780-04016	TORNILLO	SCREW	VITE	VIS	3
11	CM15026A	6E5-11325-00	ÁNODO	ANODE	ANODO	ANODE	3
12	REC67F-41114-A2	6D8-41114-A0	JUNTA	GASKET	GUARNIZIONE	JOINT	1
13	PAHT-2.5X60	90465-11M10	BRIDA	CLAMP	FLANGIA	COLLIER	3
14	PAF40-05000053	90445-10M40	TUBO	TUBE	TUBO	DURITE	1
15	CM68V-11325-01A	68V-11325-02	ÁNODO	ANODE	ANODO	ANODE	2
16	REC67F-11328-00	67F-11328-00	TAPÓN	CAP	TAPPO	BOUCHON	2
17	REC90430-06M03	90430-06M03	JUNTA	GASKET	GUARNIZIONE	JOINT	2
18	REC90480-20M05	90480-20M05	TAPÓN	CAP	TAPPO	BOUCHON	1
19	REC60H-12416-00	6G5-12416-00	VÁLVULA CONTROL DE PRESIÓN	VALVE, PRESSURE CONTROL	VALVOLA ANTIPRESSIONE	SOUPAPE DE DEPRESSION	1
20	REC90501-16M11	90501-16M11	RESORTE	SPRING	MOLLA	RESSORT	1
21	REC67F-11181-03	67F-11181-02	JUNTA CULATA	GASKET, CYLINDER HEAD	GUARNIZIONE TESTATA	JOINT DE CULASSE	1
22	PAF4-04000006	90430-08143	JUNTA	GASKET	GUARNIZIONE	JOINT	4
23	REC67F-12411-01	67F-12411-01	TERMOSTATO	THERMOSTAT	TERMOSTATO	THERMOSTAT	1
24	PAGB/T97.1-8	92995-08600	ARANDELA	WASHER	RONDELLA	RONDELLE	4
25	PAGB/T5783-M8X25	97075-08025	PERNO	STUD	BULLONE	BOULON	4
26	NGKLFR5A-11	94702-00391	BUJÍA	SPARK PLUG	CANDELA	BOUGIE	4
27	REC90101-06M56	97095-06030	TORNILLO	SCREW	VITE	VIS	14
28	PAJASOF40431-025	93210-24M79	TÓRICA	O-RING	O-RING	JOINT TORIQUE	1
29	PAF15-07050004	6G8-15363-00	TAPÓN ACEITE	PLUG, OIL	TAPPO OLIO	BOUCHON REMPLISSAGE D'HUILE	1
30	REC93102-48009	93102-48009	RETÉN DE ACEITE	OIL SEAL	PARAOLIO	JOINT SPI	1
31	REC67F-11416-00	67F11416-00	COJINETE PLANO 1 VERDE	MAIN BEARING 1 GREEN	CUSCINETTO 1 VERDE	PALIER 1 VERT	4
	REC67F-11416-10	67F11416-10	COJINETE PLANO 1 AZUL	MAIN BEARING 1 BLUE	CUSCINETTO 1 BLUE	PALIER 1 BLEU	4
	REC67F-11416-20	67F11416-20	COJINETE PLANO 1 ROJO	MAIN BERING 1 RED	CUSCINETTO 1 ROSSO	PALIER 1 ROUGE	4
32	REC6D8-11603-10	6D8-11603-01	KIT SEGMENTOS DE PISTÓN 200-300	PISTON RING KIT 200-300	KIT FASCIA PISTONE 200-300	KIT DE SEGMENTS 200-300	4
	REC6D8-11604-10	6D8-11604-01	KIT SEGMENTOS DE PISTÓN 0.25mm O/S0	PISTON RING KIT 0.25mm O/S	KIT FASCIA PISTONE 0.25mm O/S	KIT DE SEGMENTS 0.25 mm O/S	4
33	REC67F-46241-00	67F-46241-00	CORREA	BELT	CINGHIA	COURROIE DISTRIBUTION	1
34	REC93102-38008	93102-38M59	RETÉN DE ACEITE	OIL SEAL	PARAOLIO	JOINT SPI	2
35	RECK0A-A3722-00	K0A-A3722-00	RETÉN DE ACEITE	OIL SEAL	PARAOLIO	JOINT SPI	8
36	REC68V-12111-00	68V-12111-00	VÁLVULA ADMISIÓN	VALVE, INTAKE	VALVOLA ASPIRAZIONE	SOUPAPE D ADMISSION	8
37	RECK0A-A3721-00	K0A-A3721-00	RETÉN DE ACEITE	OIL SEAL	PARAOLIO	JOINT SPI	8

4T STROKES F80B/C, F100/B/D, F115A

	REF	OEM					UN.
36	REC6D8-12111-00	6D8-12111-00	VÁLVULA DE ADMISIÓN Ø96,75mm	VALVE, INTAKE Ø96,75mm	VALVOLA ASPIRAZIONE Ø96,75mm	SOUPAPE D ADMISSION Ø96,75mm	8
38	REC6D8-12121-10	6D8-12121-10	VÁLVULA DE ESCAPE Ø98,95 mm	VALVE, EXHAUST Ø98,95 mm	VALVOLA SCARICO Ø98,95 mm	SOUPAPE D'ECHAPPEMENT Ø98,95 mm	8

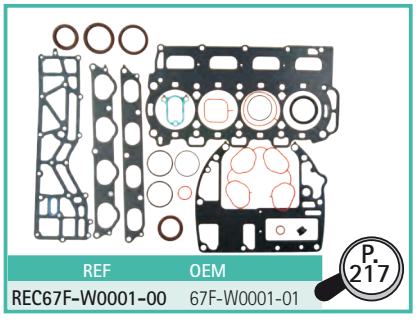

REF OEM
REC67F-W0001-00 67F-W0001-01

P. 217

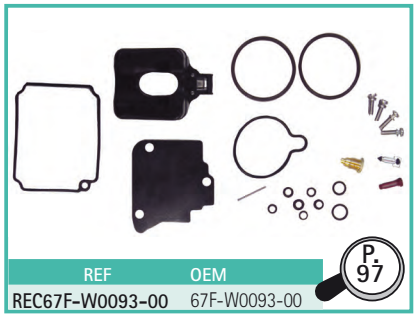

REF OEM
REC67F-W0093-00 67F-W0093-00

P. 97



P. 40

REC10W30U3
REC10W30U6
REC10W40U3
REC10W40U6

4T STROKES F150A/T/B/D/F

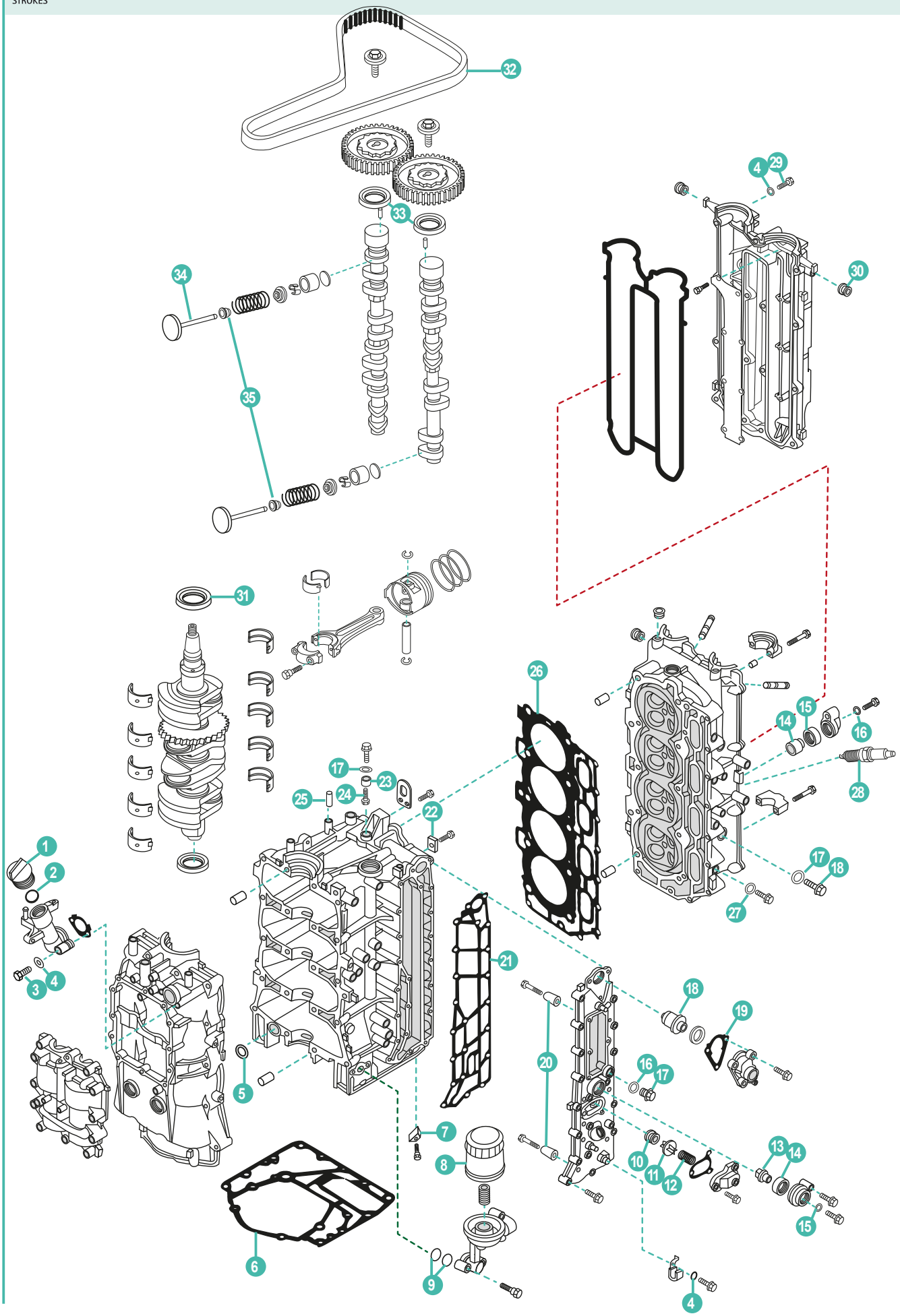

	REF	OEM					UN.
1	PAF15-07050004	6G8-15363-00	TAPÓN ACEITE	PLUG, OIL	TAPPO OLIO	BOUCHON REMPLISSAGE D'HUILE	1
2	PAJASOF40431-025	93210-24M79	TÓRICA	O-RING	O-RING	JOINT TORIQUE	1
3	REC97095-06045	97095-06045	TORNILLO	SCREW	VITE	VIS	2
4	PAGB/T97.1-6	92995-06600	ARNADELA	WASHER	RONDELLA	RONDELLE	15
5	REC93210-25552	93210-25552	TÓRICA	O-RING	O-RING	JOINT TORIQUE	1
6	REC63P-11351-01	63P-11351-00	JUNTA BASE MOTOR	GASKET ENGINE	GUARNIZIONE BASE MOTORE	JOINT MOTEUR	1
7	CM63P-11325-01A	63P-11325-01	ÁNODO	ANODE	ANODO	ANODE	1
8	REC35-822626Q15	69J-13440-01	FILTRO ACEITE	OIL FILTER	FILTRO DELL'OLIO	FILTRE À HUILE	1
9	REC93210-19MJ1	93210-19MJ1	TÓRICA	O-RING	O-RING	JOINT TORIQUE	2
10	REC90480-20M05	90480-20M05	TAPÓN	CAP	TAPPO	BOUCHON	1
11	REC60H-12416-00	6G5-12416-00	VÁLVULA DE PRESIÓN	VALVE, PRESSURE CONTROL	VALVOLA ANTIPRESSIONE	SOUPAPE DE DEPRESSION	1
12	REC90501-16M11	90501-16M11	RESORTE	SPRING	MOLLA	RESSORT	1
13	CM67F-11325-01A	67F-11325-01	ÁNODO	ANODE	ANODO	ANODE	2
14	REC67F-11328-00	67F-11328-00	TAPÓN	CAP	TAPPO	BOUCHON	2
15	REC90430-06M03	90430-06M03	JUNTA	GASKET	GUANIZIONE	JOINT	2
16	PAF15-04000003	90430-14115	JUNTA	GASKET	GUANIZIONE	JOINT	1
17	PAF15-04000002	90340-14M06	TORNILLO DRENAJE	BOLT, DISCHARGING OIL	VITE DRENAGGIO	VIS DE VIDANGE	1
18	REC67F-12411-01	67F-12411-01	TERMOSTATO	THERMOSTAT	TERMOSTATO	THERMOSTAT	1
19	REC63P-12414-00	63P-12414-00	JUNTA TAPA TERMOSTATO	GASKET, THERMOSTAT COVER	GUARNIZIONE COPERCHIO TERMOSTATO	JOINT COUVERCLE DE THERMOSTAT	1
20	CM68T-11325-00A	68T-11325-00	ÁNODO	ANODE	ANODO	ANODE	8
21	REC63P-41114-A3	63P-41114-A1	JUNTA	GASKET	GUARNIZIONE	JOINT	1
22	CM63P-11325-11A	63P-11325-11	ÁNODO	ANODE	ANODO	ANODE	4
23	TEN01165	63P-11325-21	ÁNODO	ANODE	ANODO	ANODE	1
24	PAGB/T818-M5X16	98780-05016	TORNILLO	SCREW	VITE	VIS	1
25	REC93606-12019	93606-12019	PIN CENTRADOR	HOLLOW PIN	SPINOTTO DI CENTRAGGIO	PIN DE CENTRAGE	1
26	REC63P-11181-00	63P-11181-00	JUNTA CULATA	GASKET, CYLINDER HEAD	GUARNIZIONE TESTATA	JOINT DE CULASSE	1
27	PAF4-04000006	90430-08143	JUNTA	GASKET	GUANIZIONE	JOINT	4
28	NGKLFR5A-11	94702-00391	BUJÍA	SPARK PLUG	CANDELA	BOUGIE	4
29	PAGB/T5783-M6X30	97095-06030	TORNILLO	SCREW	VITE	VIS	13
30	PAF15-07010027	90480-12072	TAPÓN	CAP	TAPPO	BOUCHON	5
31	REC93102-60004	93102-60004	RETÉN DE ACEITE	OIL SEAL	PARAOLIO	JOINT SPI	1
32	REC63P-46241-00	63P-46241-00	CORREA DISTRIBUCIÓN	BELT, TIMING	CINGHIA DISTRIBUZIONE	COURROIE DISTRIBUTION	1
33	REC93102-38008	93102-38008	RETÉN DE ACEITE	OIL SEAL	PARAOLIO	JOINT SPI	2
34	REC69J-12111-00	69J-12111-00	VÁLVULA ADMISIÓN Ø92.5 mm	VALVE, INTAKE Ø92.5 mm	VALVOLA ASPIRAZIONE Ø92.5 mm	SOUPAPE D ADMISSION Ø92.5 mm	8
35	REC69J-12119-00	69J-12119-00	RETÉN DE ACEITE	OIL SEAL	PARAOLIO	JOINT SPI	16



REC10W30U3
REC10W30U6
REC10W40U3
REC10W40U6

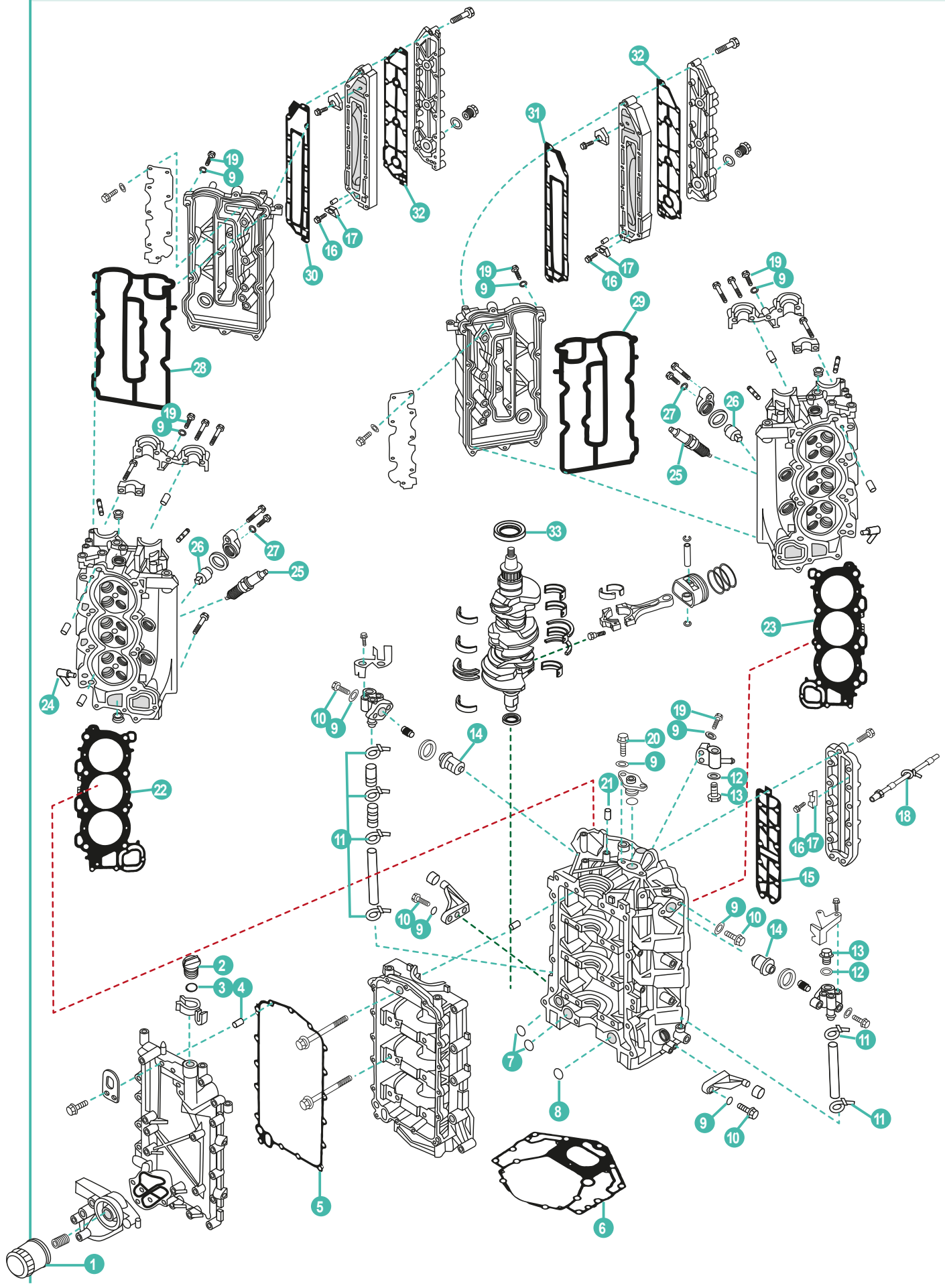
1
2
3
4
5
6
7
8
9
10
11
12
13
14
15
16
17
18
19
20
21
22
23
24
25
26
27
28
29
30
31
32
33

	REF	OEM					UN.
1	REC35-822626Q15	69J-13440-01	FILTRO ACEITE	OIL FILTER	FILTRO DELL'OLIO	FILTRE À HUILE	1
2	PAF15-07050004	6G8-15363-00	TAPÓN ACEITE	PLUG, OIL	TAPPO OLIO	BOUCHON REMPLISSAGE D'HUILE	1
3	PAJASOF40431-025	93210-24M79	TÓRICA	O-RING	O-RING	JOINT TORIQUE	1
4	REC93606-12019	93606-12019	PIN CENTRADOR	HOLLOW PIN	SPINOTTO DI CENTRAGGIO	PIN DE CENTRAGE	2
5	REC69J-15451-00	69J-15451-00	JUNTA	GASKET	GUANIZIONE	JOINT	1
6	REC69J-11351-11	69J-11351-11	JUNTA BASE MOTOR	GASKET ENGINE	GUARNIZIONE BASE MOTORE	JOINT MOTEUR	1
7	REC93210-19MJ1	93210-19MJ1	TÓRICA	O-RING	O-RING	JOINT TORIQUE	2
8	REC93210-25552	93210-25552	TÓRICA	O-RING	O-RING	JOINT TORIQUE	1
9	PAGB/T97.1-6	92995-06600	ARANDELA	WASHER	RONDELLA	RONDELLE	28
10	PAGB/T5782-M6X25	97095-06025	TORNILLO	SCREW	VITE	VIS	8
11	REC09401-11425	90465-11M59	BRIDA	CLAMP	FLANGIA	COLLIER	6
12	PAF15-04000003	90430-14115	JUNTA	GASKET	GUARNIZIONE	JOINT	2
13	PAF15-04000002	90340-14M06	TORNILLO DRENAJE	BOLT, DISCHARGING OIL	VITE DRENAGGIO	VIS DE VIDANGE	2
14	REC67F-12411-01	67F-12411-01	TERMOSTATO	THERMOSTAT	TERMOSTATO	THERMOSTAT	2
15	REC6P2-1131B-00	6P2-1131B-00	JUNTA (NO SERIE A)	GASKET (NO SERIAL A)	GUARNIZIONE (NO SERIE A)	JOINT (NO SÉRIE A)	1
16	PAGB/T820-M4X12	98780-04015	TORNILLO	SCREW	VITE	VIS	6
17	CM15026A	6E5-11325-00	ÁNODO	ANODE	ANODO	ANODE	6
18	PAHT-2.5X60	90465-11M10	BRIDA	CLAMP	FLANGIA	COLLIER	1
19	PAGB/T5783-M6X30	97095-06030	TORNILLO	SCREW	VITE	VIS	18
20	PAGB/T5783-M6X20	97095-06020	TORNILLO	SCREW	VITE	VIS	2
21	REC93606-12019	93606-12019	PIN CENTRADOR	HOLLOW PIN	SPINOTTO DI CENTRAGGIO	PIN DE CENTRAGE	1
22	REC6P2-11181-00	6P2-11181-00	JUNTA CULATA **1**	GASKET, CYLINDER HEAD **1**	GUARNIZIONE TESTATA **1**	JOINT DE CULASSE **1**	1
23	REC6P2-11182-00	6P2-11182-00	JUNTA CULATA **2**	GASKET, CYLINDER HEAD **2**	GUARNIZIONE TESTATA **2**	JOINT DE CULASSE **2**	1
24	PAF15-04000005	676-11372-00	NIPLE DE MANGUERA	NIPPLE	TUBO	RACCORD D'EAU	1
25	NGKLFR6A-11	94702-00400	BUJÍA	SPARK PLUG	CANDELA	BOUGIE	6
26	CM67F-11325-01A	67F-11325-01	ÁNODO	ANODE	ANODO	ANODE	2
27	REC90430-06M03	90430-06M03	JUNTA	GASKET	GUANIZIONE	JOINT	2
28	REC6P2-11193-00	6P2-11193-00	JUNTA TAPA DE CULATA **1**	GASKET, CYLINDER HEAD COVER **1**	GUARNIZIONE, COPERCHIO TESTATA **1**	JOINT DE CACHE CULBUTEUR **1**	1
29	REC6P2-11194-00	6P2-11194-00	JUNTA TAPA DE CULATA **2**	GASKET, CYLINDER HEAD COVER **2**	GUARNIZIONE, COPERCHIO TESTATA **2**	JOINT DE CACHE CULBUTEUR **2**	1
30	REC6P2-41122-00	6P2-41122-00	JUNTA	GASKET	GUANIZIONE	JOINT	1
31	REC6P2-41112-00	6P2-41112-00	JUNTA	GASKET	GUANIZIONE	JOINT	1
32	REC6P2-41114-00	6P2-41114-00	JUNTA	GASKET	GUANIZIONE	JOINT	2
33	REC93102-63004	93102-63008	RETÉN DE ACEITE	OIL SEAL	PARAOLIO	JOINT SPI	1
34	PAPS2700.04.03	51Y-12119-00	RETÉN DE ACEITE	OIL SEAL	PARAOLIO	JOINT SPI	24
35	REC93102-38008	93102-38008	RETÉN DE ACEITE	OIL SEAL	PARAOLIO	JOINT SPI	4
36	REC6P2-46241-02	6P2-46241-01	CORREA DISTRIBUCIÓN	BELT, TIMING	CINGHIA DISTRIBUZIONE	COURROIE DISTRIBUTION	1

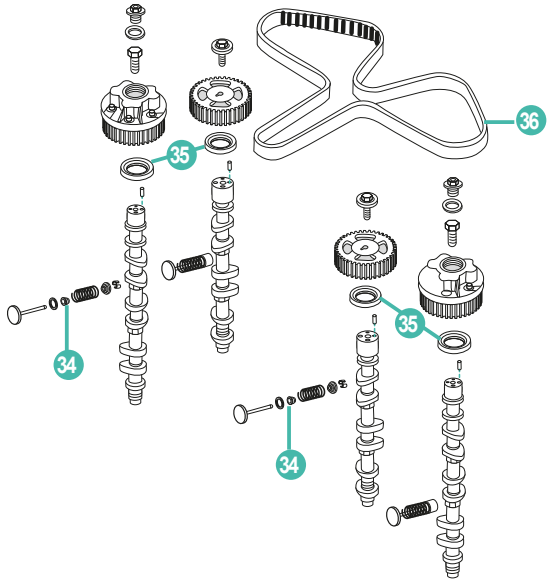

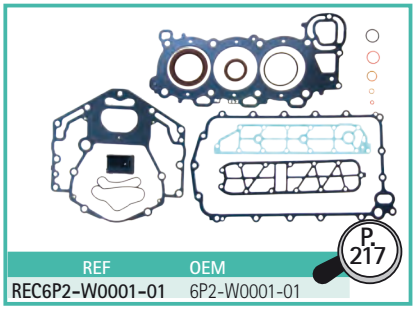

REF	OEM
REC6P2-W0001-01	6P2-W0001-01



REC10W30U3
REC10W30U6
REC10W40U3
REC10W40U6

4T STROKES F300A • F350A



REC10W30U3
REC10W30U6
REC10W40U3
REC10W40U6

	REF	OEM					UN.
1	RECN26-13440-00	N26-13440-00	FILTRO ACEITE	OIL FILTER	FILTRO DELL'OLIO	FILTRE À HUILE	1
2	CM63P-11325-01A	63P-11325-01	ÁNODO	ANODE	ANODO	ANODE	3
3	REC93606-12019	93606-12019	PIN CENTRADOR	HOLLOW PIN	SPINOTTO DI CENTRAGGIO	PIN DE CENTRAGE	5
4	REC6AW-15451-00	6AW-15451-00	JUNTA CÁRTER	CRANK CASE COMPLEX GASKET	GUARNIZIONE COPPA L'OLLIO	JOINT DE CACHE CULBUTEUR	1
5	PAF25-04000007	93604-08062	PIN CENTRADOR	HOLLOW PIN	SPINOTTO DI CENTRAGGIO	PIN DE CENTRAGE	2
6	PAJASOF40431-025	93210-24M79	TÓRICA	O-RING	O-RING	JOINT TORIQUE	1
7	PAF15-07050004	6G8-15363-00	TAPÓN ACEITE	PLUG, OIL	TAPPO OLIO	BOUCHON REMPLISSAGE D'HUILE	1
8	REC6AW-11351-00	6AW-11351-00	JUNTA BASE MOTOR	GASKET ENGINE	GUARNIZIONE BASE MOTORE	JOINT DE TETE MOTRICE	1
9	TEN01172	6AW-1132R-00	ÁNODO	ANODE	ANODO	ANODE	2
10	REC6AW-12411-00	6AW-12411-00	TERMOSTATO	THERMOSTAT	TERMOSTATO	THERMOSTAT	2
11	TEN01177	6AW-1132P-00	ÁNODO	ANODE	ANODO	ANODE	8
12	REC6AW-11182-00	6AW-11182-00	JUNTA DE CULATA 2	HEAD GASKET 2	GUARNIZIONE TESTATA 2	JOINT DE CULASSE 2	1
13	REC6AW-11181-00	6AW-11181-00	JUNTA DE CULATA 1	HEAD GASKET 1	GUARNIZIONE TESTATA 1	JOINT DE CULASSE 1	1
14	NGKLFR6A-11	94702-00400	BUJÍA	SPARK PLUG	CANDELE	BOUGIE	8
15	TEN01170	6AW-11325-00	ÁNODO	ANODE	ANODO	ANODE	2
16	REC67F-11328-00	67F-11328-00	TAPÓN	CAP	TAPPO	BOUCHON	2
17	REC90430-06M03	90430-06M03	JUNTA	GASKET	GUARNIZIONE	JOINT	2
18	PAGB/T97.1-8	92995-08600	ARANDELA	WASHER	RONDELLA	RONDELLE	2

4T STROKES

JUNTAS DE CULATA | CYLINDER HEAD GASKET | GUARNIZIONE DE TESTATA | JOINTS DE CULASSE

REF PAF2.6-04000001 OEM 69M-11181-00
F2.5 (2003+)
P. 173


REF PAF4-04000014 OEM 67D-11181-A0
F4 (1998-2009)
P. 175


new
REF PAF6-04000002 OEM 6BX-11181-00
F4B/M (2010+)
F5A/M (2010+)
F6C/M (2010+)
P. 176


REF REC6G8-11181-A1 OEM 6G8-11181-A1
F8/9.9 (1985-05)
P. 181


REF PAF15-07000100 OEM 66M-11181-10
F9.9/13.5/15 (1998-08)
P. 185
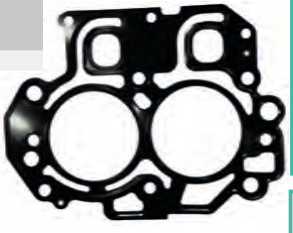

REF REC6AG-11181-00 OEM 6AG-11181-00
F9.9/15/20 (2007+)
P. 187


REF REC6BL-11181-00 OEM 6BL-11181-00
F20/25
FT25
T25 (2009+)
P. 195


REF PAF25-05040000 OEM 65W-11181-30
F20/25
T25
F45/50 (1998-09)
P. 191


REF REC67C-11181-01 OEM 67C-11181-01
F30/40 (2000-09)
P. 197
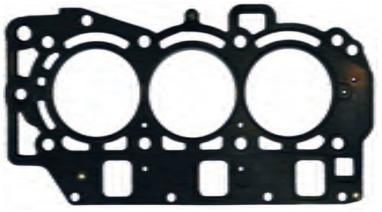

REF REC6BG-11181-00 OEM 6BG-11181-00
F30/40 (2009+)
P. 201
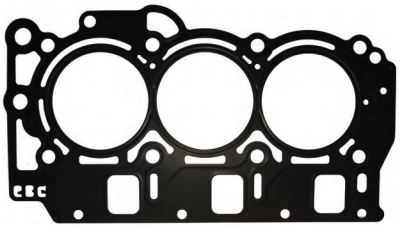

REF REC6CJ-11181-00 OEM 6CJ-11181-00
F40GE/70 (2011+)
P. 205
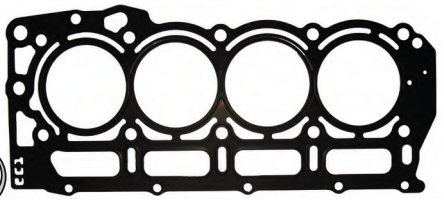

REF REC67F-11181-03 OEM 67F-11181-03
F75/80/100/115 (1999+)
P. 209
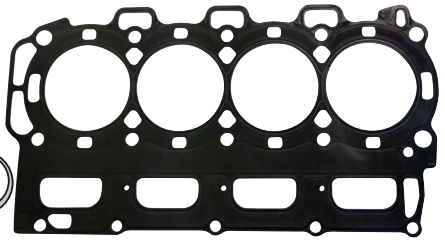

REF REC63P-11181-00 OEM 63P-11181-00
F150
FL150 (2004+)
P. 211


YAMAHA

RECAMBIOS MARINOS

REF	OEM
REC6DA-11181-00	6DA-11181-00

F175/200
FL200 (2013+)

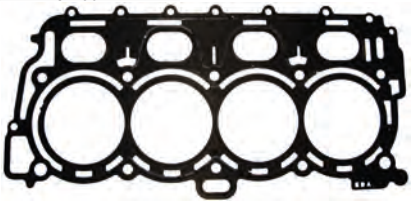

REF	OEM
REC6CB-11181-00	6CB-11181-00

F225/250/300
LF-FL225/250/300 (2011+)



REF	OEM	
REC6P2-11182-00	6P2-11182-00	BABOR | PORT | BABORDO | GAUCHE
REC6P2-11181-00	6P2-11181-00	ESTRIBOR | STD | TRIBORDO | DROIT

F200/225/250
FL-LF 200/225/250 (2006-13)

P. 213



REC6P2-11182-00



REC6P2-11181-00

REF	OEM	
REC6AW-11181-00	6AW-11181-00	BABOR | PORT | BABORDO | GAUCHE
REC6AW-11182-00	6AW-11182-00	ESTRIBOR | STD | TRIBORDO | DROIT

F300/FL300
(2008+)

P. 214



REC6AW-11181-00



REC6AW-11182-00

REF	OEM	
REC69J-11182-03	69J-11182-03	BABOR | PORT | BABORDO | GAUCHE
REC69J-11181-03	69J-11181-03	ESTRIBOR | STD | TRIBORDO | DROIT

F200/225
FL200/225 (2002-07)



REC69J-11182-03



REC69J-11181-03

4T STROKES

KITS
JUNTAS DE CULATA

CYLINDER HEAD GASKET KIT

KIT
GUARNIZIONE TESTATA

KITS
JOINTS DE CULASSE

REF	OEM
REC6G8-W0001-A3	6G8-W0001-A3

F9.9 (1996-06)
F8BM (1996-99)

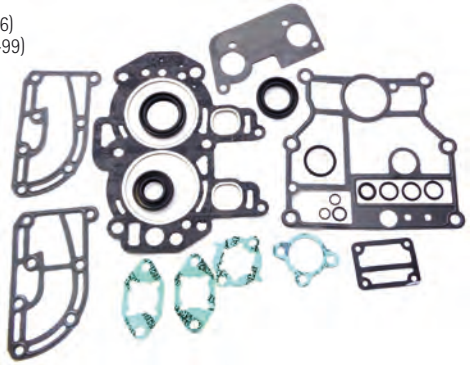

REF	OEM
REC66M-W0001-01	66M-W0001-01

F15 (2001-04)
F13.5 (2002-04)
FT 9.9/T9.9 (2001-04)
F9.9 (2001-04)

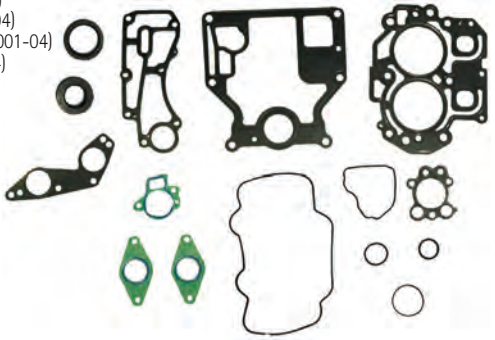

REF	OEM
REC65W-W0001-00	65W-W0001-00

F20/25 (1998-01)
T25/FT25 (2000-01)

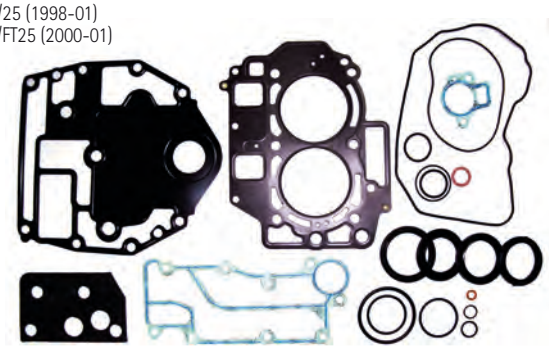

REF	OEM
REC67C-W0001-01	67C-W0001-00 67C-W0001-01

F30 ALL
F40ALL (2000-09)

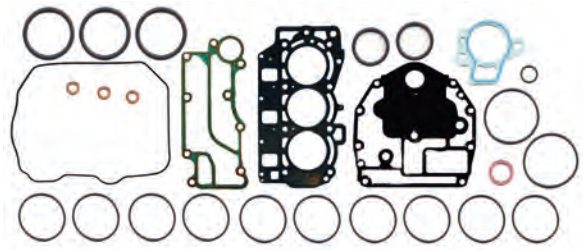

new

REF	OEM
REC6P2-W0001-01	6P2-W0001-00 6P2-W0001-01

FL/LF/F250 AET/TX
6P22 / 6P32 (2006)
FL/F200C 6AL1-6AM6 (2006-11)
FL/F225B/C 6AS1-6BBA (2007-11)
LF/FL/F250A/B/T 6BR2-6P36 (2007-11)

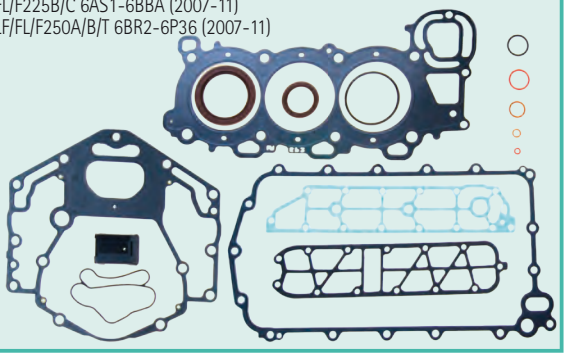

new

REF	OEM
REC67F-W0001-00	67F-W0001-00

F75 (2003-17)
F80 (1999-03)
F100 (1999-03)
F90 (2003-17)
F115 (2000-15)

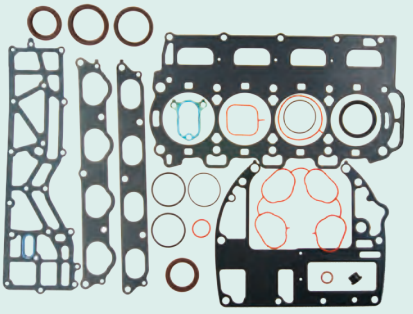

4T STROKES

JUNTAS BASE DE MOTOR — CYLINDER GASKET — GUARNIZIONE BASE MOTORE — JOINTS DE TÊTE MOTRICE

REF	OEM
PAF2.6-00000003	69M-45113-A0

F2.5

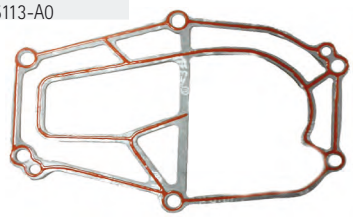

REF	OEM
PAF6-00000001	6BX-45113-00

F4/F5/F6

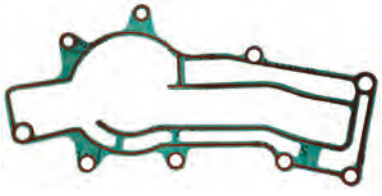

REF	OEM
PAF4-00000006	67D-45113-A0

F4

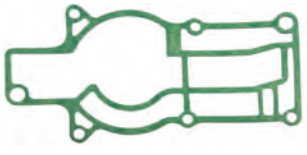

REF	OEM
PAF15-00000014	66M-11351-10

T/FT9.9
F9.9
F15
F13.5



REF	OEM
REC6G8-11351-A0	6G8-11351-A0

T/FT 9.9
F9.9
F8

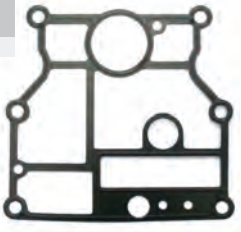

REF	OEM
PAF25-00000013	65W-11351-10

F20
F25
T/FT25



REF	OEM
REC6AH-11351-00	6AH-11351-10

F9.9
F13.5
F15
F20

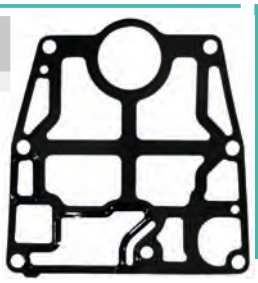

REF	OEM
REC63P-11351-01	63P-11351-01

F150
F175
F200

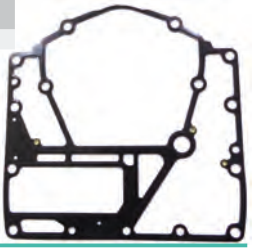

REF	OEM
REC67C-11351-00	67C-11351-01

F40
T/FT50
F50
T/FT60
F30
F60

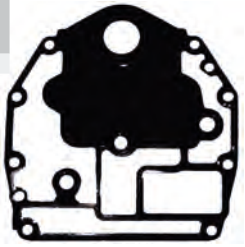

REF	OEM
REC69J-11351-11	69J-11351-11

F200
F225
F250



REF	OEM
REC68V-11351-00	68V-11351-00

F75
F80
F90
F115
F100

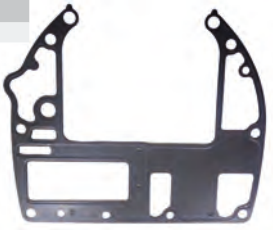

REF	OEM
REC6AW-11351-00	6AW-11351-00

F300
F350

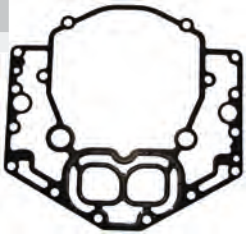

4T STROKES GUÍA JUNTAS DE MOTOR — ENGINE GASKET GUIDE — GUIDA GUARNIZIONE MOTORE — GUIDE JOINTS DE MOTEURS

		CYL	JUNTA CULATA CYLINDER HEAD GASKET GUARNIZIONE TESTATA JOINT DE CULASSE	KIT	JUNTA BASE MOTOR CYLINDER GASKET GUARNIZIONE BASE MOTORE JOINT DE TETE MOTRICE
F2.6A/M	2003	1	PAF2.6-04000001		PAF2.6-00000003
F4A/M	1998	1	PAF4-04000014		PAF4-00000006
F8A/B	1985-99	2	REC6G8-11181-A1	REC6G8-W0001-A3	REC6G8-11351-A0
F9.9A/B	1985-99	2	REC6G8-11181-A1	REC6G8-W0001-A3	REC6G8-11351-A0
F9.9C	2001-07	2	PAF15-07000100	REC66M-W0001-01	PAF15-00000014
F9.9H	2008	2	REC6AG-11181-00		REC6AH-11351-00
FT9.9D, F13.5 A	2001-07	2	PAF15-07000100	REC66M-W0001-01	PAF15-00000014
F13.5B, F15C/E/M	2008	2	REC6AG-11181-00		REC6AH-11351-00
F15A/E/M/P	2001-07	2	PAF15-07000100	REC66M-W0001-01	PAF15-00000014
F20B/E/M	2008	2	REC6AG-11181-00		REC6AH-11351-00
F20D	2011	2	REC6BL-11181-00		
F20A	1998	2	PAF25-05040000	REC65W-W0001-00	PAF25-00000013
T25/F25A/A/E/M	1998-09	2	PAF25-05040000	REC65W-W0001-00	PAF25-00000013
T25/F25D/M/F	2009	2	REC6BL-11181-00		
F30A/E/TR, F40B/E/TR	2000-09	3	REC67C-11181-01	REC67C-W0001-01	REC67C-11351-00
F30B, F40F	2009	3	REC6BG-11181-00		
F40G, F70A	2011	4	REC6CJ-11181-00		
F80A/B/C/TLR	1999	4	REC67F-11181-03	REC67F-W0001-00	REC68V-11351-00
F100A/B/D/TLR	1999	4	REC67F-11181-03	REC67F-W0001-00	REC68V-11351-00
F115A/TX/TLR	2000	4	REC67F-11181-03	REC67F-W0001-00	REC68V-11351-00
F150A/T/B	2004	4	REC63P-11181-00		REC63P-11351-01
F17A	2014	4	REC6DA-11181-00		REC63P-11351-01
F200A/TX/TR	2002-07	6	REC69J-11181-03 REC69J-11182-03		REC69J-11351-11
F200A/C, F225A/B/C	2007	6	REC6P2-11181-00 REC6P2-11182-00	REC6P2-W0001-01	REC69J-11351-11
F200B/F/G/CA	2013	4	REC6DA-11181-00		REC63P-11351-01
F225A/TR/TX/TUR	2002-07	6	REC69J-11181-03 REC69J-11182-03		REC69J-11351-11
F225CA/F, F250CA/D	2011	6	REC6CB-11181-00		
F250A/B/T	2009	6	REC6P2-11181-00 REC6P2-11182-00	REC6P2-W0001-01	REC69J-11351-11
F300A/TR, F350A/C/T	2008	8	REC6AW-11181-00 REC6AW-11182-00		REC6AW-11351-00
F300B/CA	2011	6	REC6CB-11181-00		

CIGÜEÑAL — CRANKSHAFT — ALBERO MOTORE — VILEBREQUIN

4T STROKES

GUÍA CIGÜEÑAL COMPLETO — GUIDE CRANKSHAFT ASSY — GUIDA ALBERO MOTORE COMPLETO — GUIDE VILEBREQUIN COMPLET

4T STROKES		REF
F2.5	2003-13	PAF2.6-04030000
F4	1998-09	PAF4-04030000
F9.9	1998-09	PAF15-07030000
F9.9	2009-19	PAF20-05020004
F13.5	1999-07	PAF15-07030000
F13.5	2007-09	PAF20-05020004
F15	1998-07	PAF15-07030000

4T STROKES		REF
F15	2007-19	PAF20-05020004
F20/AE/S/TL	2003-06	PAF25-05020001
F20	2007-19	PAF20-05020004
T25E/TL/R/B	2000-09	PAF25-05020001
F25	1999-09	PAF25-05020001
F45AET	1999	PAF25-05020001
F50TJR	1999	PAF25-05020001

PISTONES — PISTONS — PISTONI — PISTONS

4T STROKES

KITS DE PISTONES — PISTON KITS — KIT PISTONE — KIT PISTON

	STD REF	OEM
	PAF2.6-04020001	69M-E1631-01-96
	REC69M-E1603-01	69M-E1 603-01
	PAF2.6-04020005	69M-E1633-00



F2.5AMH/MLH/MH/MSH (2004+)

	STD REF	OEM
	PAF20-05020001	6AH-11631-00
	PAF20-05020100	6AH-11603-00
	PAF20-05020003	137-11633-10
	PAF20-05020002	93450-17129



F9.9 HMH, HE (2009+)
F13.5 B, BMH (2007-09)
F15 CMH, MH, ELH, CWH, CE (2007+)
F20 BMH, ELH, BE, MH (2007+)

	STD REF	OEM
	PAF4-04020200	68D-E1631-00-96
	REC68D-E1603-00	68D-E1603-00
	PAF4-04020005	68D-E1633-00
	PAF4-04020006	93450-14088



F4A/MSHA/AMH/MLHB-D/MH (2002-09)

	STD REF	OEM
	PAF25-05020100	65W-11631-00-96
	REC67C-11603-00	67C-11603-00
	PAF25-05020105	62Y-11633-00
	PAF25-05020106	93450-17129



F20AES/AET/AE-S (2003-06)
F25ELH/AE/AW/A/AET/MHZ/MHA/AM/AEH/A-ES/
T25ELRZ-T/FT25B (1998-09)
F30A/ERZ/MLH/AET/ELHB/AMH/TR/AWH/ETL (2001-09)
F40B/ELH/BE/ERZ/ERA/BMH/BWH (2000-09)

	STD REF	OEM
	PAF15-07020001	66M-11631-00-96
	REC66N-11603-00	66N-11603-00
	PAF15-07020006	634-11633-00
	PAF15-07020005	93450-15023



F9.9C/CE/CMH/CWH/D (1998-08)
F13.5AMH/AEH/AEP (2000-07)
FT/F15A/PR/PLR/AEP/ELH/MH/AE/AM (2000-07

2T STROKES **2B • 2MSH**

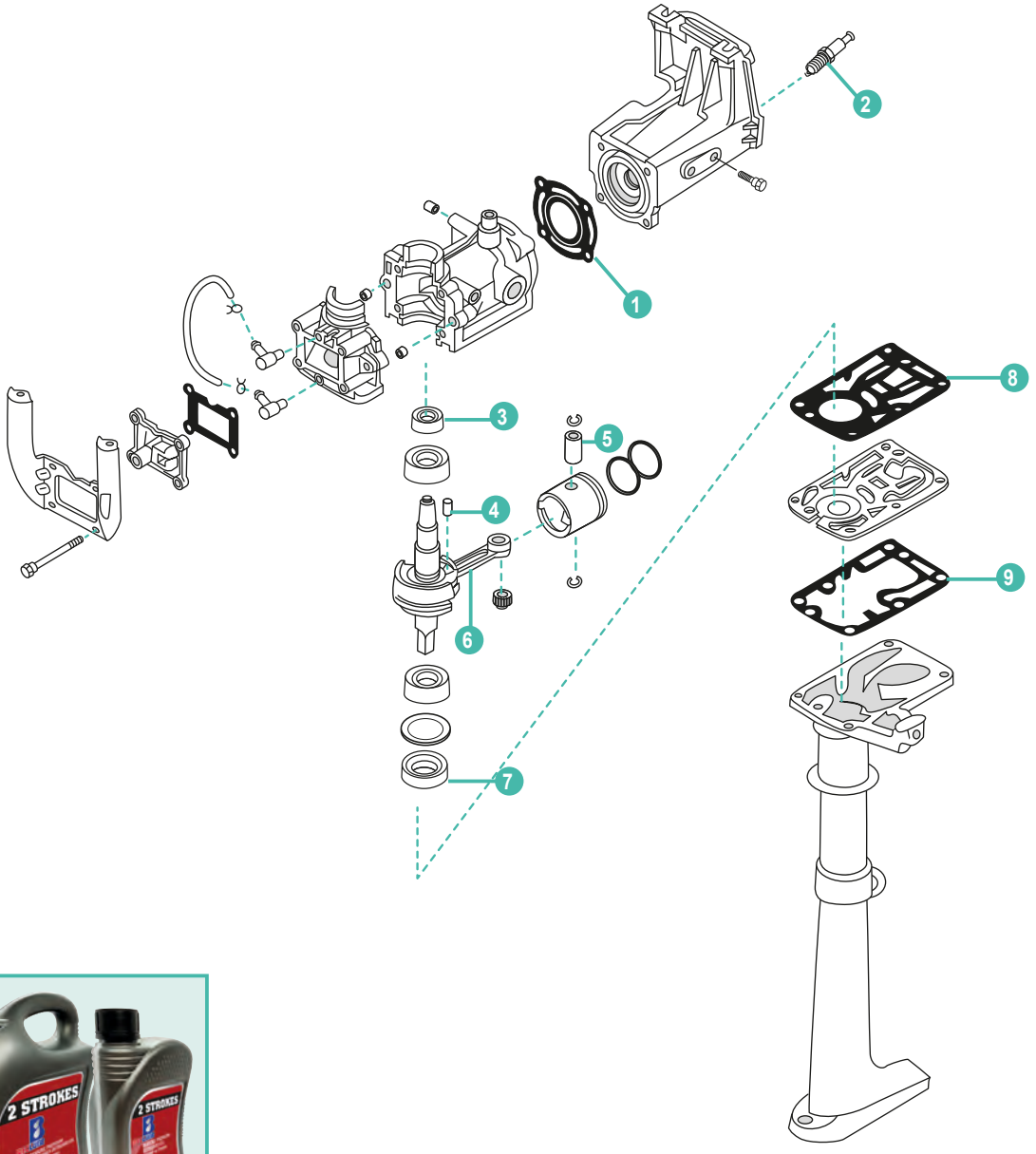



	REF	OEM					UN.
1	REC6F8-11181-A0	6F8-11181-A1	JUNTA CULATA	GASKET, CYLINDER HEAD	GUARNIZIONE TESTATA	JOINT DE CULASSE	1
2	NGKB7HS	94702-00040	BUJÍA	SPARK PLUG	CANDELA	BOUGIE	1
3	PAF2.6-04010001	93102-20070	RETÉN DE ACEITE	OIL SEAL	PARAOLIO	JOINT SPI	1
4	REC646-11681-00	646-11681-00	PIN DE BIELA	PIN, CRANK	SPINOTTO BIELLA	PIN DE BIELLE	1
5	REC646-11633-00	646-11633-00	PIN, PISTÓN	PIN, PISTON	SPINOTTO PISTONE	AXE DE PISTON	1
6	REC646-11651-02	646-11651-02	BIELA	CONNECTING ROD	BIELLA	BIELLE	1
7	REC93102-15M32	93102-15M32	RETÉN DE ACEITE	OIL SEAL	PARAOLIO	JOINT SPI	1
8	REC6A1-14613-A0	6A1-14613-A0	JUNTA TUBO DE ESCAPE	GASKET, EXHAUST PIPE	GUARNIZIONE, TUBO SCARICO	JOINT, PIPE D'ECHAPPEMENT	1
9	REC646-14623-A1	646-14623-A1	JUNTA	GASKET	GUARNIZIONE	JOINT	1

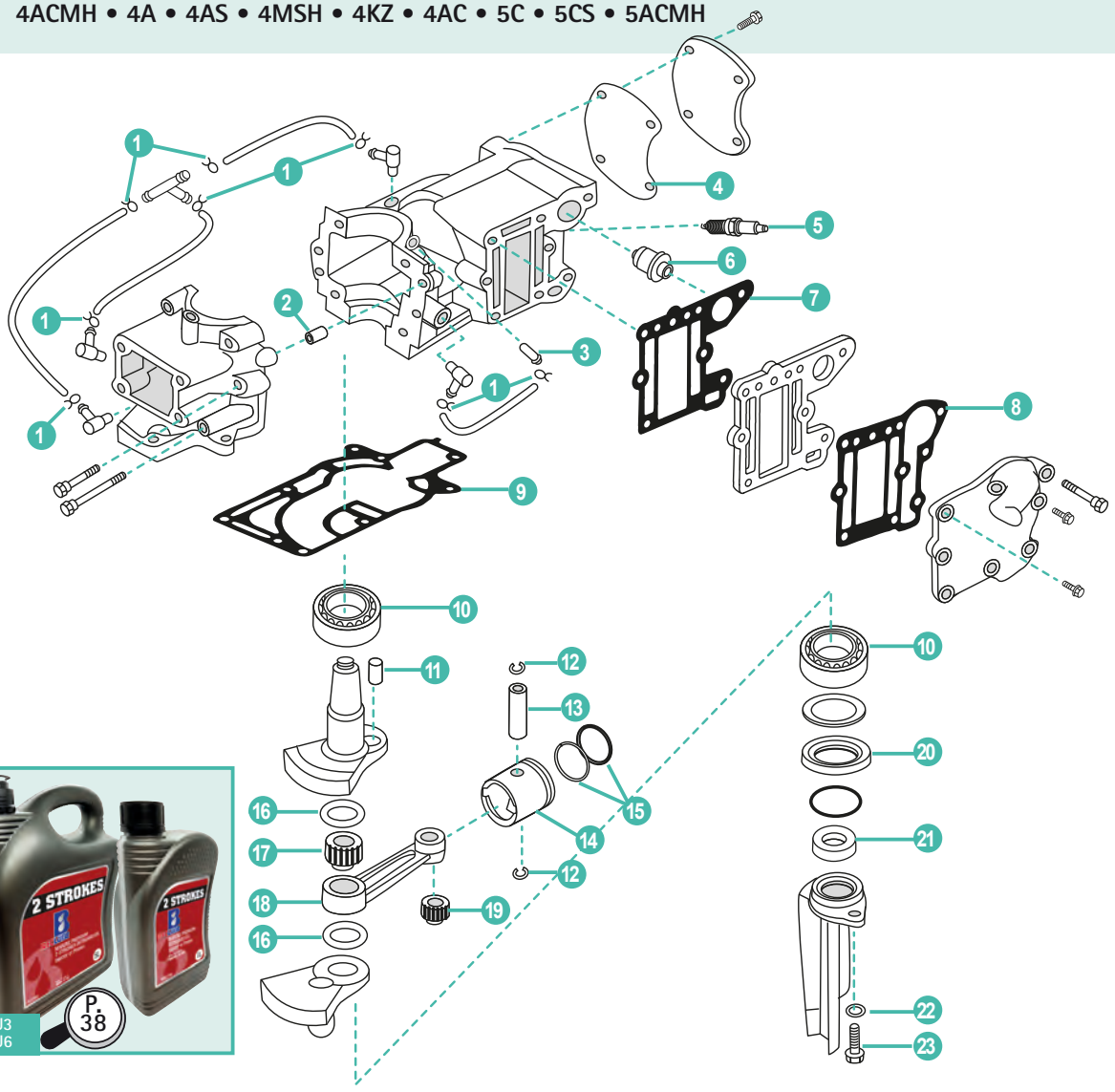

P. 38

REC2TU3
REC2TU6

	REF	OEM					UN.
1	PAHT-2.5X60	90467-06016	CLIP ABRAZADERA	CLIP	CLIP FASCETTA	COLLIER	8
2	REC93606-12019	93606-12019	PIN CENTRADOR	HOLLOW PIN	SPINOTTO DI CENTRAGGIO	PIN DE CENTRAGE	2
3	REC624-14485-00	624-14485-00	PIPA DE AGUA	PIPE, WATER	TUBO	RACCORD TUYAU D'EAU	1
4	REC6E0-11193-A1	6E0-11193-A1	JUNTA TAPA	GASKET, COVER	GAURNIZIONE COPERCHIO	JOINT COUVERCLE	1
5	NGKBR7HS	94702-00272	BUJÍA	SPARK PLUG	CANDELA	BOUGIE	1
6	REC6E5-12411-02	6E5-12411-01	TERMOSTATO	THERMOSTAT	TERMOSTATO	THERMOSTAT	1
7	REC6E0-41112-A1	6E0-41112-A1	JUNTA DE ESCAPE	EXHAUST GASKET	GUARNIZIONE DI SCARICO	JOINT D'ECHAPPEMENT	1
8	REC6E0-41114-A1	6E0-41114-A1	JUNTA EXTERIOR, TAPA DE ESCAPE	GASKET, EXHAUST OUTER COVER	GUARNIZIONE ESTERIORE, COPERCHIO SCARICO	JOINT DE COUVERCLE EXT ECHAPPEMENT	1
9	REC6E0-45113-A1	6E0-45113-A1	JUNTA BASE MOTOR	GASKET ENGINE	GUARNIZIONE BASE MOTORE	JOINT MOTEUR	1
10	REC93306-204U0	93306-204U0	RODAMIENTO	BEARING	CUSCINETTO	PALIER DE VILEBREQUIN	2
11	REC6G1-11681-00	6G1-11681-00	PIN DE CIGÜEÑAL	PIN, CRANK	SPINOTTO AALBERO MOTORE	PIN DE VILEBREQUIN	1
12	REC93450-13022	93450-13022	CIRCLIP	CIRCLIP	CIRCLIP	CIRCLIP	2
13	REC6G1-11633-00	6G1-11633-00	PIN, PISTÓN	PIN, PISTON	SPINOTTO PISTONE	AXE DE PISTON	1
14	REC6E0-11631-00-98K	6E0-11631-00-98	PISTON	PISTON STD	PISTONE	PISTON	1
15	REC6G1-11610-00	6G1-11610-00	KIT SEGMENTOS DE PISTÓN	PISTON RING KIT	KIT FASCIA PISTONE	KIT SEGMENTS	1
	REC6J1-11610-00	6J1-11610-00	KIT SEGMENTOS DE PISTÓN **5C**	PISTON RING KIT **5C**	KIT FASCIA PISTONE **5C**	KIT SEGMENTS **5C**	
16	REC90209-18112	90209-18112	ARANDELA	WASHER	RONDELLA	RONDELLE	2
17	REC93310-418V1	93310-418V1	COJINETE DE BIELA	BEARING, CONNECTING ROD	CUSCINETTO BIELLA	PALIER DE BIELLE	1
18	REC6E0-11651-01	6E0-11651-01	COJINETE DE BIELA	BEARING, CONNECTING ROD	CUSCINETTO BIELLA	PALIER DE BIELLE	1
19	REC93310-112V0	93310-112V0	RODAMIENTO	BEARING	CUSINETTO	PALIER	1
20	REC93101-20M29	93101-20M29	RETÉN DE ACEITE	OIL SEAL	PARAOLIO	JOINT SPI	1
21	REC93101-10M25	93101-10M25	RETÉN DE ACEITE	OIL SEAL	PARAOLIO	JOINT SPI	1
22	PAGB/T97.1-6	92995-06600	ARANDELA	WASHER	RONDELLA	RONDELLE	1
23	PAGB/T5783-M6X16	97095-06016	TORNILLO	BOLT	VITE	VIS	1

2T STROKES

6CMH • 6CWH • 6MSH • 6DMH • 6MH • 6D
8CMH • 8CWH • 8MSH • 8MH • 8D

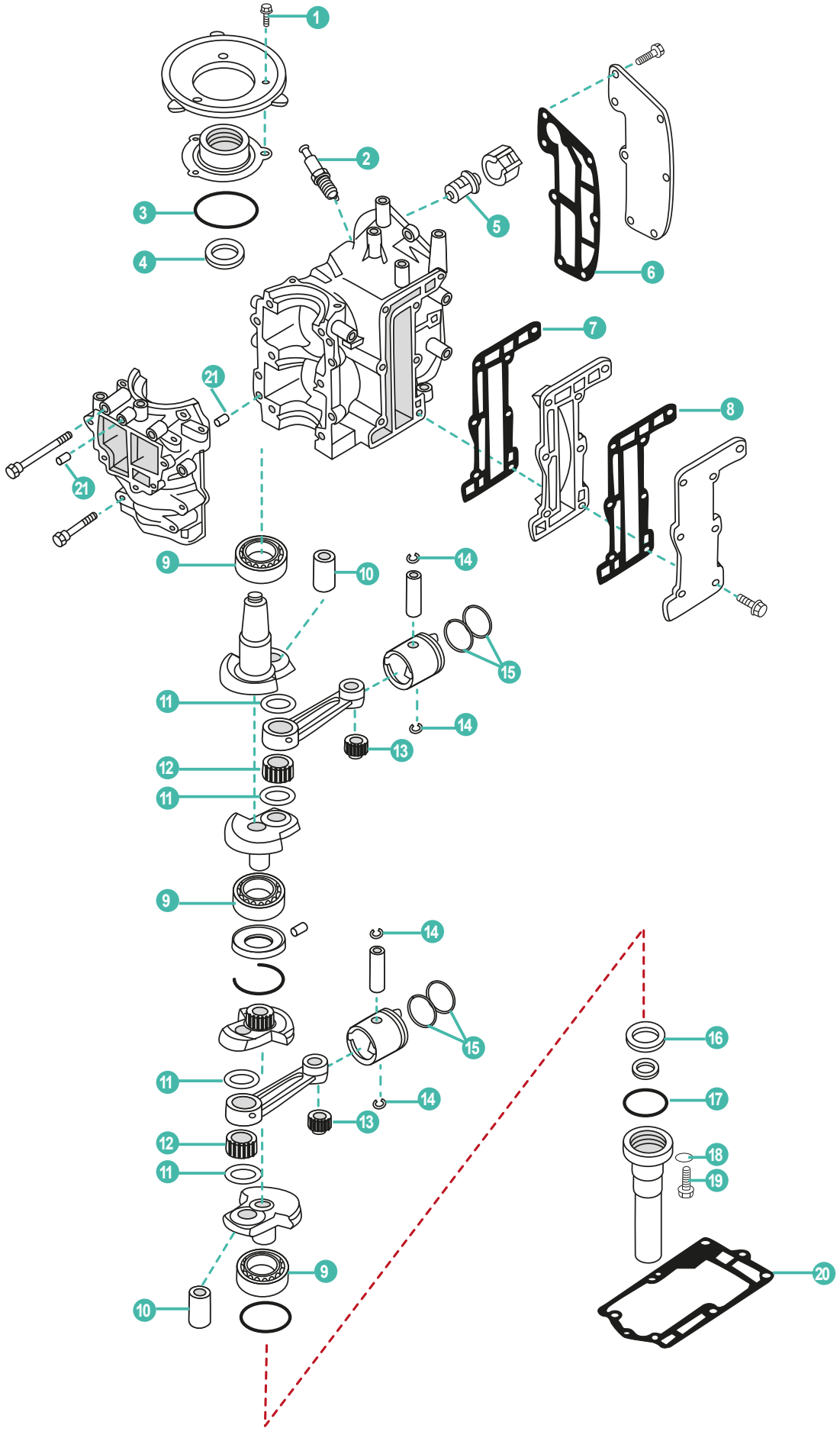

	REF	OEM					UN.
1	PAGB/T5783-M5x12	97013-06016	TORNILLO	BOLT	VITE	VIS	3
2	NGKBR7HS-10	94702-00271	BUJÍA	SPARK PLUG	CANDELA	BOUGIE	2
	NGKBR6HS-10	94702-00274	BUJÍA	SPARK PLUG	CANDELA	BOUGIE	2
3	REC93210-54M54	93210-54M54	TÓRICA	O-RING	O-RING	JOINT TORIQUE	1
4	REC93102-20M25	93102-20M25	RETÉN DE ACEITE	OIL SEAL	PARAOLIO	JOINT SPI	1
5	REC6E5-12411-02	6E5-12411-01	TERMOSTATO	THERMOSTAT	TERMOSTATO	THERMOSTAT	1
6	REC6G1-11193-A1	6G1-11193-A1	JUNTA TAPA TERMOSTATO	GASKET, THERMOSTAT COVER	GUARNIZIONE COPERCHIO TERMOSTATO	JOINT COUVERCLE DE THERMOSTAT	1
7	REC6G1-41112-A1	6G1-41112-A1	JUNTA EXTERIOR, TAPA DE ESCAPE	GASKET, EXHAUST OUTER COVER	GUARNIZIONE ESTERIORE, COPERCHIO SCARICO	JOINT DE COUVERCLE EXT ECHAPPEMENT	1
8	REC6G1-41114-A0	6G1-41114-A0	JUNTA DE ESCAPE	EXHAUST GASKET	GUARNIZIONE DI SCARICO	JOINT D'ECHAPPEMENT	1
9	REC93306-204U0	93306-204U0	RODAMIENTO	BALL BEARING	CUSCINETTO	ROULEMENT À BILLE	3
10	REC6G1-11681-00	6G1-11681-00	PIN	PIN	SPINOTTO	LEVIER D'ENTRAINEMENT	2
11	REC90209-18112	90209-18112	ARANDELA	WASHER	RONDELLA	RONDELLE	4
12	REC93310-418V1	93310-418V1	COJINETE DE BIELA	BEARING, CONNECTING ROD	CUSCINETTO BIELLA	PALIER DE BIELLE	2
13	REC93310-112V0	93310-112V0	COJINETE DE BIELA	BEARING, CONNECTING ROD	CUSCINETTO BIELLA	PALIER DE BIELLE	2
14	REC93450-13022	93450-13022	CIRCLIP	CIRCLIP	CIRCLIP	CIRCLIP	4
15	REC6G1-11610-00	6N0-E1603-00	KIT SEGMENTOS DE PISTÓN	PISTON RING SET	KIT FASCIA PISTONE	KIT SEGMENTS	2
16	REC93101-20M34	93101-20M34	RETÉN DE ACEITE	OIL SEAL	PARAOLIO	JOINT SPI	1
17	REC93210-42159	93210-42159	TÓRICA	O-RING	O-RING	JOINT TORIQUE	1
18	PAGB/T97.1-6	92995-06600	ARANDELA	WASHER	RONDELLA	RONDELLE	1
19	PAGB/T5783-M6X16	97095-06016	TORNILLO	BOLT	VITE	VIS	1
20	REC6G1-45113-A1	6G1-45113-A1	JUNTA BASE MOTOR	GASKET ENGINE	GUARNIZIONE BASE MOTORE	JOINT MOTEUR	1
21	PAF25-04000007	93604-08062	PIN CENTRADOR	HOLLOW PIN	SPINOTTO DI CENTRAGGIO	PIN DE CENTRAGE	6



P. 38
REC2TU3
REC2TU6

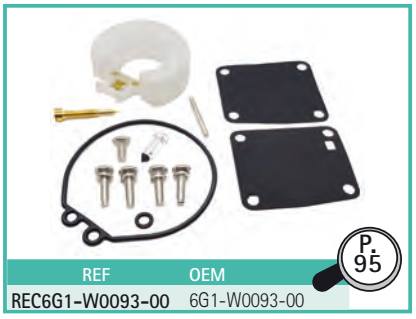
P. 95

REF	OEM
REC6G1-W0093-00	6G1-W0093-00

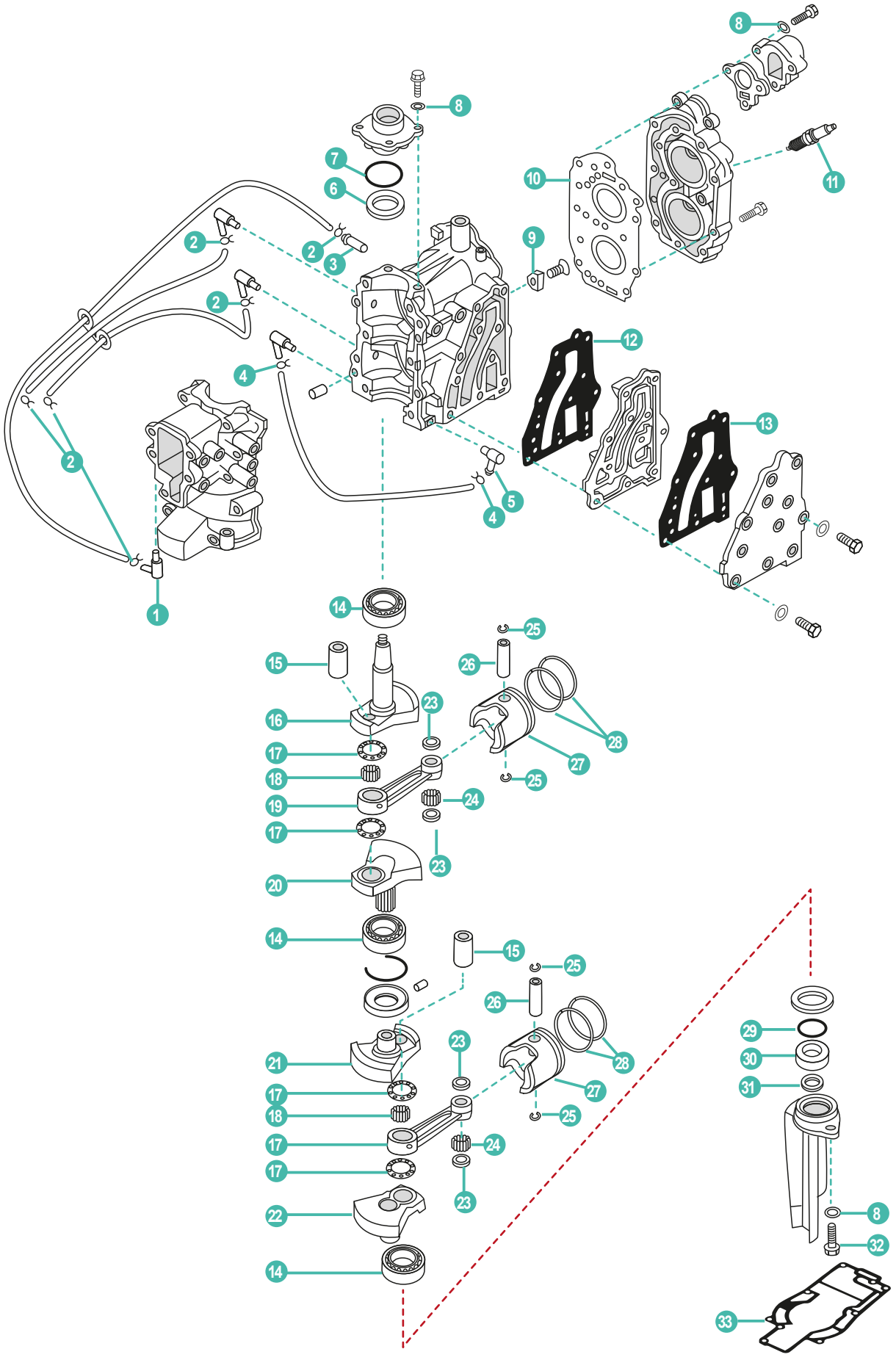
1
2
3
4
5
6
7
8
9
10
11
12
13
14
15
16
17
18
19
20
21
22
23
24
25
26
27
28
29
30
31
32
33

	REF	OEM					UN.
1	REC650-11370-00	650-11370-01	NIPLE DE MANGUERA	NIPPLE	TUBO	RACCORD D'EAU	1
2	PAHT-2.5X60	90467-06016	PRESILLA	CLIP	CLIP	CLIP	6
3	REC624-14485-00	624-14485-00	PIPA DE AGUA	PIPE, WATER	TUBO	RACCORD TUYAU D'EAU	1
4	PAF4-04000030	90467-09M09	PRESILLA	CLIP	CLIP	CLIP	2
5	PAF15-04000005	676-11372-00	NIPLE DE MANGUERA	NIPPLE	TUBO	RACCORD D'EAU	1
6	REC93102-20M25	93102-20M25	RETÉN DE ACEITE	OIL SEAL	PARAOLIO	JOINT SPI	1
7	REC93210-42159	93210-42159	TÓRICA	O-RING	O-RING	JOINT TORIQUE	1
8	PAGB/T97.1-6	92995-06600	ARANDELA	WASHER	RONDELLA	RONDELLE	6
9	TEN01166	664-11325-00	ÁNODO	ANODE	ANODO	ANODE	1
10	REC677-11181-A0	677-11181-A1	JUNTA CULATA	GASKET, CYLINDER HEAD	GUARNIZIONE TESTATA	JOINT DE CULASSE	1
11	NGKB7HS-10	94702-00217	BUJÍA	SPARK PLUG	CANDELA	BOUGIE	2
12	REC677-41112-A0	677-41112-A1	JUNTA DE ESCAPE	EXHAUST GASKET	GUARNIZIONE DI SCARICO	JOINT D'ECHAPPEMENT	1
13	REC677-41112-A0	677-41114-A1	JUNTA EXTERIOR, TAPA DE ESCAPE	GASKET, EXHAUST OUTER COVER	GUARNIZIONE ESTERIORE, COPERCHIO SCARICO	JOINT DE COUVERCLE EXT ECHAPPEMENT	1
14	REC93306-204U0	93306-240U0	RODAMIENTO	BALL BEARING	CUSCINETTO	ROULEMENT À BILLE	3
15	REC6G1-11681-00	6G1-11681-00	PIN	PIN	SPINOTTO	LEVIER D'ENTRAINEMENT	2
16	REC677-11412-02	677-11412-02	CIGÜEÑAL **1**	CRANK **1**	ALBERO MOTORE **1**	VILEBREQUIN **1**	1
17	REC90209-18112	90209-18112	ARABDELA	WASHER	RONDELLA	RONDELLE	4
18	REC93310-418U0	93310-418U0	COJINETE DE BIELA	BEARING, CONNECTING ROD	CUSCINETTO BIELLA	PALIER DE BIELLE	2
19	REC6E0-11651-01	6E0-11651-01	BIELA	CONNECTING ROD	BIELLA	BIELLE	2
20	REC677-11422-02	677-11422-02	CIGÜEÑAL **2**	CRANK **2**	ALBERO MOTORE **2**	VILEBREQUIN **2**	1
21	REC677-11432-02	677-11432-02	CIGÜEÑAL **3**	CRANK **3**	ALBERO MOTORE **3**	VILEBREQUIN **3**	1
22	REC677-11442-02	677-11442-02	CIGÜEÑAL **4**	CRANK **4**	ALBERO MOTORE **4**	VILEBREQUIN **4**	1
23	REC90201-12565	90201-12565	ARANDELA PLANA	WASHER PLATE	RONDELLA PIANA	RONDELLE	4
24	REC93602-14118	93602-14118	COJINETE DE BIELA	BEARING, CONNECTING ROD	CUSCINETTO BIELLA	PALIER DE BIELLE	56
25	REC93450-13022	93450-13022	CIRCLIP	CIRCLIP	CIRCLIP	CIRCLIP	4
26	REC6G1-11633-00	6G1-11633-00	PIN, PISTÓN	PIN, PISTON	SPINOTTO PISTONE	AXE DE PISTON	2
	REC677-11631-00K	677-11631-00-97	PISTÓN **STD**	PISTON **STD**	PISTONE **STD**	PISTON **STD**	
27	REC677-11635-00K	677-11635-00	PISTÓN **0.25mm** O/S	PISTON **0.25mm** O/S	PISTONE **0.25mm** O/S	PISTON **0.25mm** O/S	2
	REC677-11636-00K	677-11636-00	PISTÓN **0.50mm** O/S	PISTON **0.50mm** O/S	PISTONE **0.50mm** O/S	PISTON **0.50mm** O/S	
	REC647-11610-00	647-11610-00	KIT SEGMENTOS **STD**	PISTON RING SET **STD**	KIT FASCE **STD**	KIT SEGMENTS **STD**	
28	REC647-11610-10	647-11610-10	KIT SEGMENTOS **0.25mm** O/S	PISTON RING SET **0.25mm** O/S	KIT FASCE **0.25mm** O/S	KIT SEGMENTS **0.25mm** O/S	2
	REC647-11610-20	647-11610-20	KIT SEGMENTOS **0.50mm** O/S	PISTON RING SET **0.50mm** O/S	KIT FASCE **0.50mm** O/S	KIT SEGMENTS **0.50mm** O/S	
29	REC93210-42M70	93210-42M70	TÓRICA	O-RING	O-RING	JOINT TORIQUE	1
30	REC93101-20M29	93101-20M29	RETÉN DE ACEITE	OIL SEAL	PARAOLIO	JOINT SPI	1
31	REC93101-14M01	93101-14M01	RETÉN DE ACEITE	OIL SEAL	PARAOLIO	JOINT SPI	1
32	PAGB/T5783-M6X16	97095-06016	PERNO	STUD	BULLONE	BOULON	2
33	REC677-45113-A0	677-45113-A0	JUNTA BASE MOTOR	GASKET ENGINE	GUARNIZIONE BASE MOTORE	JOINT MOTEUR	1



REC2TU3
REC2TU6

P. 38



REF	OEM
REC677-W0093-00	677-W0093-00

P. 95

2T STROKES 9.9F/FM/FEM/MHV • 9.9FMH/MSH • 13.5AMH • 15F/FEM/FM/MH/MSH • 15FW/MHH



REC2TU3
REC2TU6
P. 38

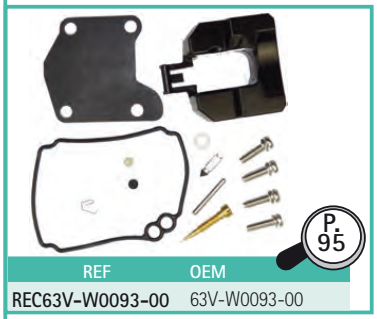

P. 95

REF	OEM
REC63V-W0093-00	63V-W0093-00

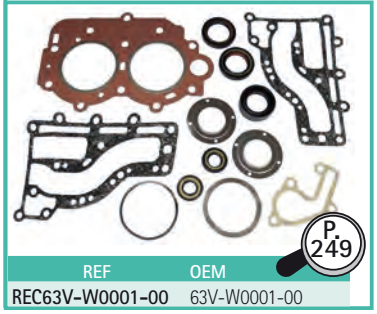

P. 249

REF	OEM
REC63V-W0001-00	63V-W0001-00

RECAMBIOS MARINOS

	REF	OEM					UN.
1	PAGB/T5783-M6X20	90119-06MA2	TORNILLO	BOLT	VITE	VIS	4
2	REC682-12413-00-1S	682-12413-00-1S	TAPA TERMOSTATO	COVER, THERMOSTAT	COPERCHIO TERMOSTATO	COUVERCLE DE THERMOSTAT	1
3	REC682-12414-A1	682-12414-A1	JUNTA TAPA TERMOSTATO	GASKET, THERMOSTAT COVER	GUARNIZIONE COPERCHIO TERMOSTATO	JOINT COUVERCLE DE THERMOSTAT	1
4	REC6E5-12411-30	6E5-12411-30	TERMOSTATO	THERMOSTAT	TERMOSTATO	THERMOSTAT	1
5	NGKB7HS-10	94702-00271	BUJÍA	SPARK PLUG	CANDELA	BOUGIE	2
6	REC6E7-11111-01-1S	6E7-11111-01-1S	CULATA	HEAD CYLINDER	TESTATA	CULASSE	1
7	REC63V-11181-A1	63V-11181-A2	JUNTA CULATA	GASKET, CYLINDER HEAD	GUARNIZIONE TESTATA	JOINT DE CULASSE	1
8	TEN01162	682-11325-00	ÁNODO DE ZINC	ZINC ANODE	ANODO ZINCO	ANODE ZINC	1
9	REC650-14485-03	650-14485-03	NIPLE DE MANGUERA	NIPPLE	TUBO	RACCORD D'EAU	2
10	PAHT-2.5X60	90467-06016	BRIDA	CLAMP	FLANGIA	COLLIER	4
11	REC93606-12019	93606-12019	PIN CENTRADOR	HOLLOW PIN	SPINOTTO DI CENTRAGGIO	PIN DE CENTRAGE	2
12	REC624-14485-00	624-14485-00	PIPA DE AGUA	PIPE, WATER	TUBO	RACCORD TUYAU D'EAU	1
13	REC63V-41111-00-1S	63V-41111-00-1S	PLACA ESCAPE	INNER COVER, EXHAUST	PIASTRA SCARICO	PLAQUE D'ECHAPPEMENT	1
14	REC63V-41112-A0	63V-41112-A0	JUNTA TAPA	GASKET, COVER	GAURNIZIONE COPERCHIO	JOINT COUVERCLE	2
15	REC63V-41113-00-1S	63V-41113-00-1S	CUBIERTA DE ESCAPE	EXHAUST COVER	COPERCHIO SCARICO	COUVERCLE D'ECHAPPEMENT	1
16	PAF15-04000005	676-11372-00	NIPLE DE MANGUERA	NIPPLE	TUBO	RACCORD D'EAU	1
17	PAGB/T5783-M6X30	90119-06M04	TORNILLO	BOLT	VITE	VIS	13
18	REC93110-23M00	93110-23M00	RETÉN DE ACEITE	OIL SEAL	PARAOLIO	JOINT SPI	1
19	REC63V-11445-00	63V-11445-00	ESPACIADOR	COLLAR	DISTANZIALE	ENTRETOISE	2
20	REC93306-205U7	93306-205U7	RODAMIENTO	BALL BEARING	CUSCINETTO	ROULEMENT À BILLE	3
21	REC63V-11412-00	63V-11412-00	CIGÜEÑAL **1**	CRANK **1**	ALBERO MOTORE **1**	VILEBREQUIN **1**	1
22	REC63V-11422-00	63V-11422-00	CIGÜEÑAL **2**	CRANK **2**	ALBERO MOTORE **2**	VILEBREQUIN **2**	1
23	REC63V-11432-00	63V-11432-00	CIGÜEÑAL **3**	CRANK **3**	ALBERO MOTORE **3**	VILEBREQUIN **3**	1
24	REC63V-11442-00	63V-11442-00	CIGÜEÑAL **4**	CRANK **4**	ALBERO MOTORE **4**	VILEBREQUIN **4**	1
25	REC682-11681-00	682-11681-00	PIN	PIN	SPINOTTO	PIN	2
26	REC90209-20159	90209-20M23	ARANDELA	WASHER	RONDELLA	RONDELLE	4
27	REC650-11651-04	650-11651-00	BIELA	CONNECTING ROD	BIELLA	BIELLE	2
28	REC93310-620V5	93310-620V5	COJINETE DE BIELA	BEARING, CONNECTING ROD	CUSCINETTO BIELLA	PALIER DE BIELLE	2
29	REC63V-11515-02	63V-11515-02	ARILLO	SEAL LABYRINTH	GUARNIZIONE	JOINT	1
30	REC93440-52009	93440-52008	CLIP	CLIP	CLIP	CLIP	1
31	REC90201-14377	9020-14377	ARANDELA	WASHER	RONDELLA	RONDELLE	4
32	REC93602-14104	93602-14104	AGUJAS DE RODAMIENTO	PIN DOWEL	SPILLO CUSCINETTO	AIGUILLE DE PALIER	50
33	REC93450-15023	93450-15023	CIRCLIP	CIRCLIP	CIRCLIP	CIRCLIP	4
34	REC634-11633-00	634-11633-00	PIN, PISTÓN	PIN, PISTON	SPINOTTO PISTONE	AXE DE PISTON	2
	REC682-11610-01	682-11610-01	KIT SEGMENTOS **STD**	PISTON RING SET **STD**	KIT FASCE **STD**	KIT SEGMENTS **STD**	
35	REC682-11610-11	682-11610-11	KIT SEGMENTOS **0.25mm** O/S	PISTON RING SET **0.25mm** O/S	KIT FASCE **0.25mm** O/S	KIT SEGMENTS **0.25mm** O/S	2
	REC682-11610-21	682-11610-21	KIT SEGMENTOS **0.50mm** O/S	PISTON RING SET **0.50mm** O/S	KIT FASCE **0.50mm** O/S	KIT SEGMENTS **0.50mm** O/S	
	REC6E7-11631-00K	6E7-11631-00-97	PISTÓN **STD**	PISTON **STD**	PISTONE **STD**	PISTON **STD**	
36	REC6E7-11635-00K	6E7-11635-00	PISTÓN **0.25mm** O/S	PISTON **0.25mm** O/S	PISTONE **0.25mm** O/S	PISTON **0.25mm** O/S	2
	REC6E7-11636-00K	6E7-11636-00	PISTÓN **0.50mm** O/S	PISTON **0.50mm** O/S	PISTONE **0.50mm** O/S	PISTON **0.50mm** O/S	
37	REC90201-46M29	90201-46M29	ARANDELA	WASHER	RONDELLA	RONDELLE	1
38	REC93210-46M16	93210-46M16	TÓRICA	O-RING	O-RING	JOINT TORIQUE	1
39	REC93102-25M48	93102-25M48	RETÉN DE ACEITE	OIL SEAL	PARAOLIO	JOINT D'HUILE	1
40	REC93101-25018	93101-250-18	RETÉN DE ACEITE	OIL SEAL	PARAOLIO	JOINT D'HUILE	1
41	REC93101-13018	93101-13018	RETÉN DE ACEITE	OIL SEAL	PARAOLIO	JOINT D'HUILE	2
42	REC63V-15396-01-CA	63V-15396-01-CA	CUERPO DEL RETÉN	SHELL, OIL SEAL	GUARNIZIONE CORPO	LOGEMENT JOINT SPI	1
43	PAGB/T97.1-8	92995-06600	ARANDELA	WASHER	RONDELLA	RONDELLE	1
44	PAGB/T5783-M6X16	97095-06016	TORNILLO	BOLT	VITE	VIS	1
45	REC63V-45113-A1	63V-45113-A1	JUNTA BASE MOTOR	GASKET ENGINE	GUARNIZIONE BASE MOTORE	JOINT DE TETE MOTRICE	1

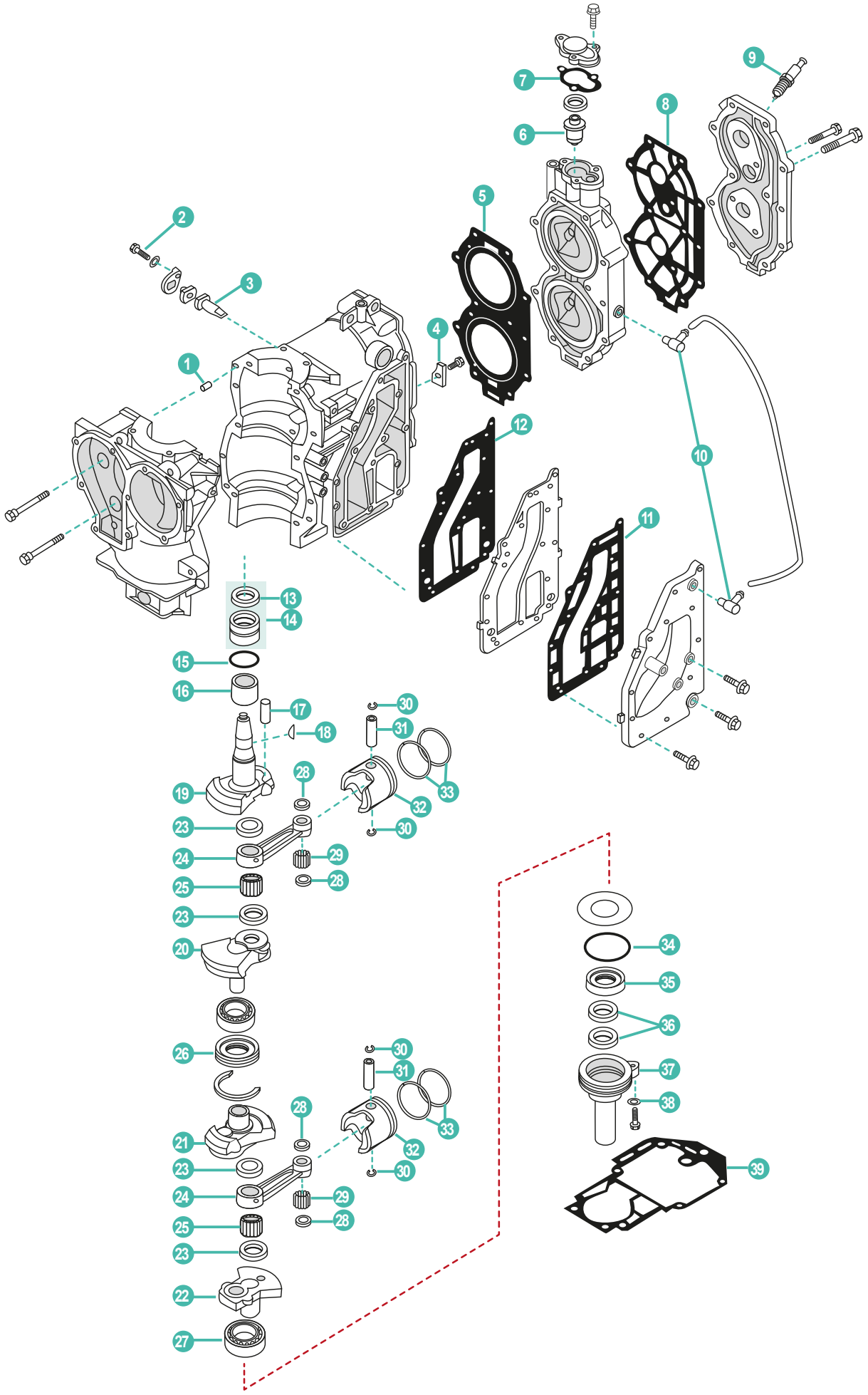
1
2
3
4
5
6
7
8
9
10
11
12
13
14
15
16
17
18
19
20
21
22
23
24
25
26
27
28
29
30
31
32
33
34
35
36
37
38
39

	REF	OEM					UN.
1	REC93606-12019	93606-12019	PIN CENTRADOR	HOLLOW PIN	SPINOTTO DI CENTRAGGIO	PIN DE CENTRAGE	2
2	PAGB/T5783-M5X12	97013-06016	TORNILLO	BOLT	VITE	VIS	1
3	TEN01150	6J8-11325-00	ÁNODO DE ZINC	ZINC ANODE	ANODO DI ZINCO	ANODE ZINC	1
4	TEN01121	689-11325-00	ÁNODO DE ZINC	ZINC ANODE	ANODO DI ZINCO	ANODE ZINC	1
5	REC61N-11181-00	61N-11181-A1	JUNTA CULATA	GASKET, CYLINDER HEAD	GUARNIZIONE TESTATA	JOINT DE CULASSE	1
6	REC6E5-12411-02	6E5-12411-01	TERMOSTATO	THERMOSTAT	TERMOSTATO	THERMOSTAT	1
7	REC655-12414-A1	655-12414-A1	JUNTA TAPA TERMOSTATO	GASKET, THERMOSTAT COVER	GUARNIZIONE COPERCHIO TERMOSTATO	JOINT COUVERCLE DE THERMOSTAT	1
8	REC61T-11193-A0	61T-11193-A1	JUNTA TAPA DE CULATA	GASKET, CYLINDER HEAD COVER	GUARNIZIONE COPERCHIO TESTATA	JOINT COUVERCLE DE CULASSE	1
9	NGKBR7HS-10	94702-00271	BUJÍA	SPARK PLUG	CANDELA	BOUGIE	2
	NGKB7HS-10	94702-00217	BUJÍA	SPARK PLUG	CANDELA	BOUGIE	
10	PAF15-04000005	676-11372-00	NIPLE DE MANGUERA	NIPPLE	TUBO	RACCORD D'EAU	2
11	REC6K8-41124-A1	6K8-41124-A1	JUNTA EXTERIOR, TAPA DE ESCAPE	GASKET, EXHAUST OUTER COVER	GUARNIZIONE ESTERIORE, COPERCHIO SCARICO	JOINT DE COUVERCLE EXT ECHAPPEMENT	1
12	REC6K8-41122-A1	6K8-41122-A1	JUNTA DE ESCAPE	EXHAUST GASKET	GUARNIZIONE DI SCARICO	JOINT D'ECHAPPEMENT	1
13	REC93102-32M07	93102-32M07	RETÉN DE ACEITE	OIL SEAL	PARAOLIO	JOINT SPI	1
14	REC93399-99951	93399-99951	RODAMIENTO	BEARING	CUSCINETTO	ROULEMENT À BILLE	1
15	REC93210-46M16	93210-46M16	TÓRICA	O-RING	O-RING	JOINT TORIQUE	1
16	REC90387-32002	90387-32002	COLLAR	COLLAR	COLLARE	COLLIER	1
17	REC689-11681-00	689-11681-01	PIN	PIN	SPINOTTO	PIN	2
18	REC90280-05049	90280-05049	CHAVETA	KEY WOODRUFF	CHIAVETTA	CLAVETTE	1
19	REC6G0-11412-00	69P-11412-00	CIGÜEÑAL **1**	CRANK **1**	ALBERO MOTORE **1**	VILEBREQUIN **1**	1
20	REC6G0-11422-00	69P-11422-00	CIGÜEÑAL **2**	CRANK **2**	ALBERO MOTORE **2**	VILEBREQUIN **2**	1
21	REC6G0-11432-00	69P-11432-00	CIGÜEÑAL **3**	CRANK **3**	ALBERO MOTORE **3**	VILEBREQUIN **3**	1
22	REC6G0-11442-00	69P-11442-00	CIGÜEÑAL **4**	CRANK **4**	ALBERO MOTORE **4**	VILEBREQUIN **4**	1
23	REC90209-24M03	90209-24M03	ARANDELA	WASHER	RONDELLA	RONDELLE	4
24	REC689-11651-00	689-11651-00	BIELA	ROD CONNECTING	BIELLA	BIELLE	2
25	REC93310-624U5	93310-62406	COJINETE DE BIELA	BEARING, CONNECTING ROD	CUSCINETTO BIELLA	PALIER DE BIELLE	2
26	REC61N-11515-00	61N-11515-00	ARO	SEAL, LABYRINTH	O-RING	JOINT	1
27	REC93306-305U3	93306-305U3	RODAMIENTO	BEARING	CUSCINETTO	PALIER	1
28	REC90201-20M27	90201-20M27	ARANDELA PLANA	WASHER, PLATE	RONDELLA PIANA	RONDELLE	4
29	REC93602-20M02	93602-20M02	AGUJA PASADOR	NEEDLE PIN	SPILLO	AIGUILLE	68
	REC93602-18M12	93602-18M12	AGUJAS PASADOR 25N/M & 20D/M	NEEDLE PIN 25N/M & 20D/M	SPILLO 25N/M & 20D/M	AIGUILLE 25N/M & 20D/M	
30	REC688-11634-00	688-11634-00	CIRCLIP	CIRCLIP	CIRCLIP	CIRCLIP	4
31	REC689-11633-00	689-11633-00	PIN, PISTÓN	PIN, PISTON	SPINOTTO PISTONE	AXE DE PISTON	2
	REC61N-11631-00K	61N-11631-00-95	PISTÓN **STD**	PISTON **STD**	PISTONE **STD**	PISTON **STD**	2
32	REC61N-11635-00K	61N-11635-00	PISTÓN **0.25mm** O/S	PISTON **0.25mm** O/S	PISTONE **0.25mm** O/S	PISTON **0.25mm** O/S	2
	REC61N-11636-00K	61N-11636-00	PISTÓN **0.50mm** O/S	PISTON **0.50mm** O/S	PISTONE **0.50mm** O/S	PISTON **0.50mm** O/S	2
	REC61N-11603-00	61N-11603-00	KIT SEGMENTOS **STD**	PISTON RING SET **STD**	KIT FASCE **STD**	KIT SEGMENTS **STD**	
33	REC61N-11604-00	61N-11604-00	KIT SEGMENTOS **0.25mm** O/S	PISTON RING SET **0.25mm** O/S	KIT FASCE **0.25mm** O/S	KIT SEGMENTS **0.25mm** O/S	2
	REC61N-11605-00	61N-11605-00	KIT SEGMENTOS **0.50mm** O/S	PISTON RING SET **0.50mm** O/S	KIT FASCE **0.50mm** O/S	KIT SEGMENTS **0.50mm** O/S	
34	REC93210-58M21	93210-58M21	TÓRICA	O-RING	O-RING	JOINT TORIQUE	1
35	REC93102-25008	93102-25008	RETÉN DE ACEITE	OIL SEAL	PARAOLIO	JOINT SPI	1
36	REC93101-16001	93101-16001	RETÉN DE ACEITE	OIL SEAL	PARAOLIO	JOINT SPI	2
37	REC689-15396-01-CA	689-15396-01-5B	CUERPO DEL RETÉN	SHELL, OIL SEAL	GUARNIZIONE CORPO	LOGEMENT JOINT SPI	1
38	PAGB/T97.1-8	92995-06600	ARANDELA	WASHER	RONDELLA	RONDELLE	1
39	REC61T-45113-A0	689-45113-A1	JUNTA BASE MOTOR	GASKET ENGINE	GUARNIZIONE BASE MOTORE	JOINT DE TETE MOTRICE	1



REC2TU3
REC2TU6
P. 38


REF	OEM
REC61N-W0093-00	61N-W0093-00

P. 96

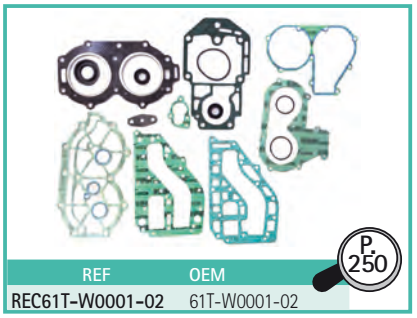
REF	OEM
REC61T-W0001-02	61T-W0001-02

P. 250

2T STROKES 25HP J/JEO/ESH • 30HP D/DEO/DETO • 30ELH/ELA • 30DMHO/DMSH • 30ERZ/DEL • 30MLH (1986-13)

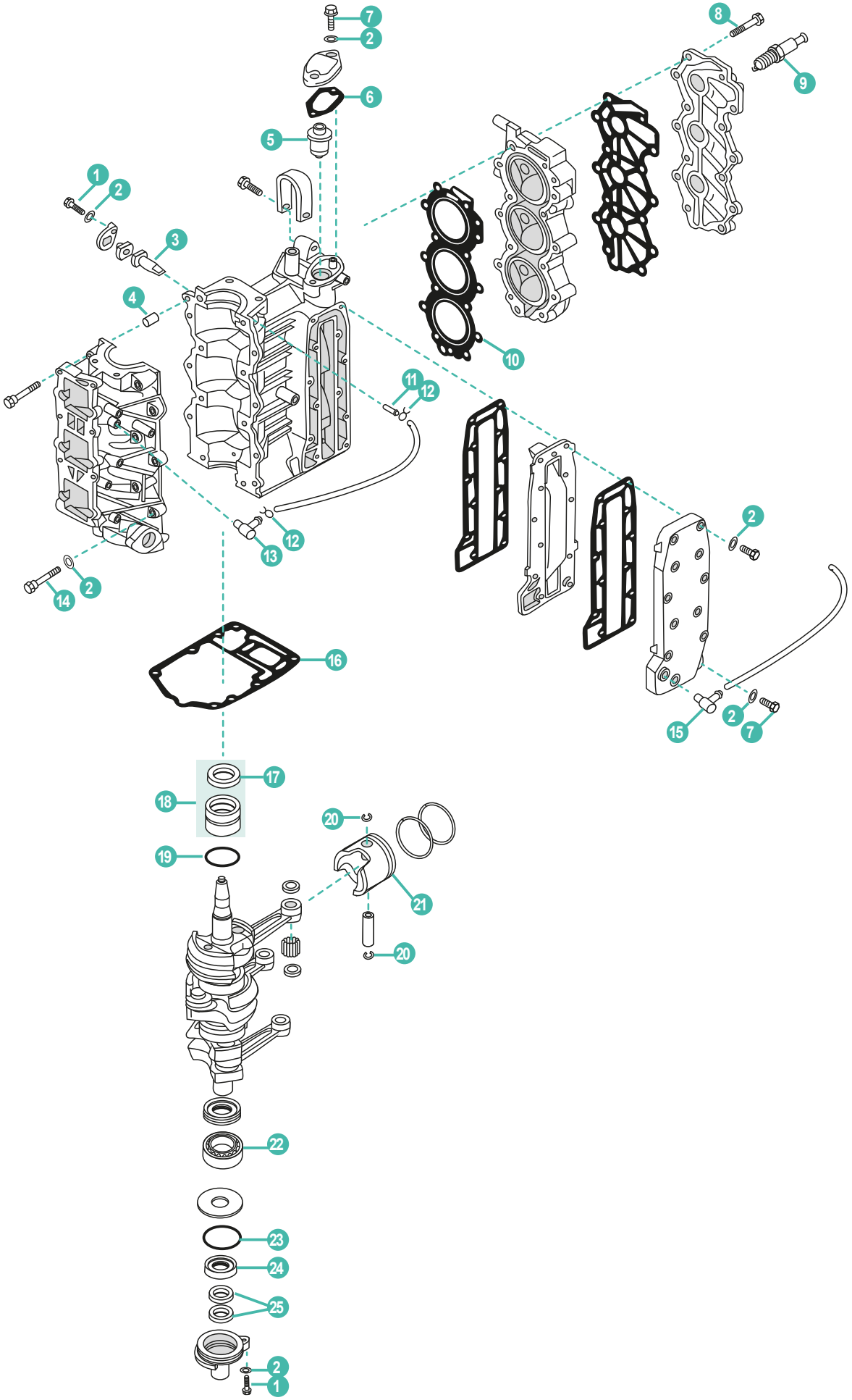

	REF	OEM					UN.
1	PAGB/T5783-M6X16	97095-06016	TORNILLO	BOLT	VITE	VIS	4
2	PAGB/T97.1-6	92990-06600	ARANDELA PLANA	FLAT WASHER	RONDELLA PIANA	RONDELLE PLANE	24
3	TEN01150	6J8-11325-00	ÁNODO	ANODE	ANODO	ANODE	2
4	REC93606-12019	93606-12019	PIN CENTRADOR	HOLLOW PIN	SPINOTTO DI CENTRAGGIO	PIN DE CENTRAGE	2
5	REC6E5-12411-02	6E5-12411-01	TERMOSTATO	THERMOSTAT	TERMOSTATO	THERMOSTAT	1
6	REC61A-12414-A0	61A-12414-A0	JUNTA TAPA TERMOSTATO	GASKET, THERMOSTAT COVER	GUARNIZIONE COPERCHIO TERMOSTATO	JOINT COUVERCLE DE THERMOSTAT	1
7	PAGB/T5782-M6X25	97095-06025	TORNILLO	BOLT	VITE	VIS	3
8	REC90119-08M21	90119-08M21	TORNILLO CON ARANDELA	BOLT, FLANGE	VITE CON RONDELLA	VIS DE BRIDE	14
9	NGKBR7HS-10	94702-00271	BUJÍA	SPARK PLUG	CANDELA	BOUGIE	3
10	REC6J8-11181-A2	6J8-11181-A1	JUNTA CULATA	GASKET, CYLINDER HEAD	GUARNIZIONE TESTATA	JOINT DE CULASSE	1
11	REC624-14485-00	624-14485-00	PIPA DE AGUA	PIPE, WATER	TUBO	RACCORD TUYAU D'EAU	1
12	PAHT-2.5X60	90467-06016	PRESILLA	CLAMP	CLIP	COLLIER	2
13	REC650-11370-00	650-11370-00	NIPLE DE MANGUERA	NIPPLE	TUBO	RACCORD D'EAU	1
14	PAGB/T5783-M6X30	970-95-06030	TORNILLO	BOLT	VITE	VIS	6
15	PAF15-04000005	676-11372-00	NIPLE DE MANGUERA	NIPPLE	TUBO	RACCORD D'EAU	1
16	REC6J8-45113-00	6J8-45113-A0	JUNTA BASE MOTOR	GASKET ENGINE	GUARNIZIONE BASE MOTORE	JOINT DE TETE MOTRICE	1
17	REC93102-26M27	93102-26M27	RETÉN DE ACEITE	OIL SEAL	PARAOLIO	JOINT SPI	1
18	REC93311-632U7	93311-632U7	COJINETE DE RODILLOS	BEARING CYL	CUSCINETTO CILINDRO	ROULEMENT	1
19	REC93210-42159	93210-42159	TÓRICA	O-RING	O-RING	JOINT TORIQUE	1
20	PAF25-05020106	93450-17129	CIRCLIP	CIRCLIP	CIRCLIP	CIRCLIP	6
21	REC6J8-11631-02	6J8-11631-02-97	PISTÓN STD	PISTO STD	PISTONE STD	PISTON STD	3
22	REC93306-305U3	93306-305U3	RODAMIENTO	BALL BEARING	CUSCINETTO	ROULEMENT À BILLE	1
23	PAF15-06080003	93210-56M80	TÓRICA	O-RING	O-RING	JOINT TORIQUE	1
24	REC93101-25M35	93101-25M28	RETÉN DE ACEITE	OIL SEAL	PARAOLIO	JOINT SPI	1
25	REC93104-16M01	93104-16M04	RETÉN DE ACEITE	OIL SEAL	PARAOLIO	JOINT SPI	2



REC2TU3
REC2TU6

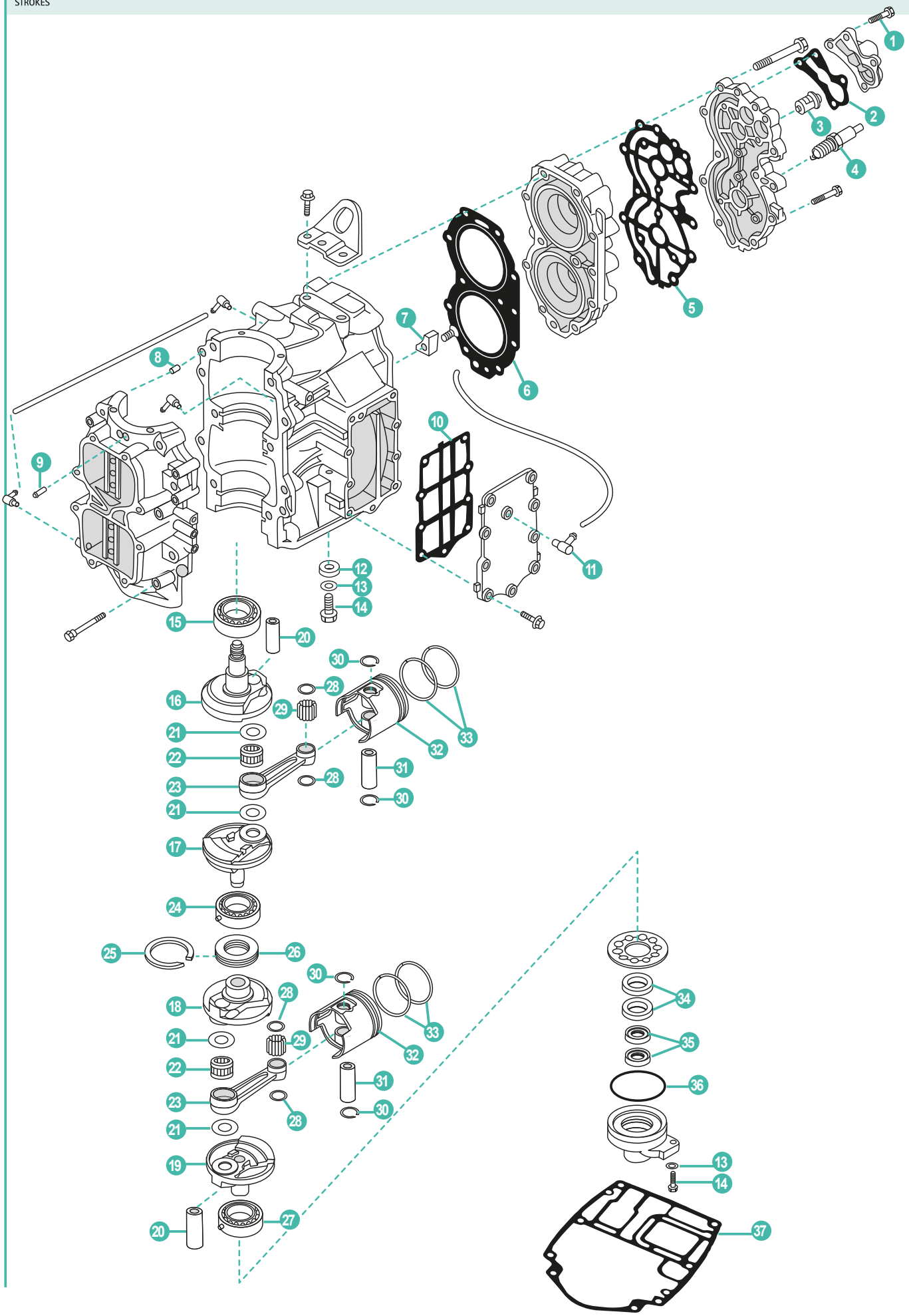
1
2
3
4
5
6
7
8
9
10
11
12
13
14
15
16
17
18
19
20
21
22
23
24
25
26
27
28
29
30
31
32
33
34
35
36
37

	REF	OEM					UN.
1	PAGB/T5782-M6X35	90119-06MA5	TORNILLO	BOLT WITH WASHER	VITE	VIS	4
2	REC676-12414-A0	676-12414-A0	JUNTA TAPA TERMOSTATO	GASKET, THERMOSTAT COVER	GUARNIZIONE COPERCHIO TERMOSTATO	JOINT COUVERCLE DE THERMOSTAT	1
3	REC6E5-12411-02	6E5-12411-01	TERMOSTATO	THERMOSTAT	TERMOSATO	THERMOSTAT	1
4	NGKBR7HS	B7H-S0000-00-00	BUJÍA	SPARK PLUG	CANDELA	BOUGIE	2
5	REC66T-11193-A0	66T-11193-A0	JUNTA DE CULATÍN	HEAD VOER GASKET	GUARNIZIONE TESTATA	JOIN DE COUVRE CULASSE	1
6	REC66T-11181-00	66T-11181-A2	JUNTA CULATA	GASKET, CYLINDER HEAD	GUARNIZIONE TESTATA	JOINT DE CULASSE	1
7	TEN01166	676-11325-00	ÁNODO	ANODE	ANODO	ANODE	1
8	PAF15-00000014	93608-12063	PIN CENTRADOR	HOLLOW PIN	SPINOTTO DI CENTRAGGIO	PIN DE CENTRAGE	2
9	REC624-14485-00	624-14485-00	PIPA DE AGUA	PIPE, WATER	TUBO	RACCORD TUYAU D'EAU	1
10	REC66T-41114-A0	667-41114-A0	JUNTA TAPA	GASKET, COVER	GAURNIZIONE COPERCHIO	JOINT COUVERCLE	1
11	PAF15-04000005	676-11372-00	NIPLE DE MANGUERA	NIPPLE	TUBO	RACCORD D'EAU	1
12	TEN01127	676-45251-00	ÁNODO	ANODE	ANODO	ANODE	1
13	PAGB/T97.1-8	92995-06600	ARANDELA	WASHER	RONDELLA	RONDELLE	2
14	PAGB/T5783-M6X20	97095-06020	TORNILLO	BOLT	VITE	VIS	2
15	REC93306-307U0	93306-307U0	RODAMIENTO	BEARING	CUSCINETTO	ROULEMENT À BILLE	1
16	REC66T-11412-00	66T-11412-00	CIGÜEÑAL **1**	CRANK **1**	ALBERO MOTORE **1**	VILEBREQUIN **1**	1
17	REC66T-11422-00	66T-11422-00	CIGÜEÑAL **2**	CRANK **2**	ALBERO MOTORE **2**	VILEBREQUIN **2**	1
18	REC66T-11432-00	66T-11432-00	CIGÜEÑAL **3**	CRANK **3**	ALBERO MOTORE **3**	VILEBREQUIN **3**	1
19	REC66T-11442-00	66T-11442-00	CIGÜEÑAL **4**	CRANK **4**	ALBERO MOTORE **4**	VILEBREQUIN **4**	1
20	REC66T-11681-00	66T-11681-00	PIN	PIN	SPINOTTO	PIN D'ENTRAINEMENT	2
21	REC90209-27M07	90209-27M07	ARANDELA	WASHER	RONDELLA	RONDELLE	4
22	REC93310-727U0	93310-727U0	RODAMIENTO	BEARING	CUSCINETTO	ROULEMENT	2
23	REC6F5-11651-00	6F5-11651-00	BIELA	ROD CONNECTING	BIELLA	BIELLE	2
24	REC93332-000UE	93332-000UE	RODAMIENTO	BEARING	CUSCINETTO	ROULEMENT À BILLE	1
25	REC93440-68M03	93440-68M03	CIRCLIP	CIRCLIP	CIRCLIP	CIRCLIP	1
26	REC6F5-11515-00	6F5-11515-00	ARILLO	SEAL, LABERYNTH	GUARNIZIONE TONDA	JOINT	1
27	REC93306-306V5	9306-306V5	RODAMIENTO	BEARING	CUSCINETTO	ROULEMENT	1
28	REC90201-20417	90201-20417	ARANDELA	WASHER PLATE	RONDELLA	RONDELLE	4
29	REC93603-21111	93603-21111	AGUJAS DE RODAMIENTO	PIN, DOWEL	SPINOTTO CENTRAGGIO	AIGUILLE	56
30	REC663-11634-00	633-11634-00	JUNTA	CLIP	GUARNIZIONE	JOINT	4
31	REC6F5-11633-00	6F5-11633-00	PIN, PISTÓN	PIN, PISTON	SPINOTTO PISTONE	AXE DE PISTON	2
	REC66T-11631-01K	66T-11631-01-93	PISTÓN **STD**	PISTON **STD**	PISTONE **STD**	PISTON **STD**	
32	REC66T-11635-01K	66T-11635-01	PISTÓN **0.25mm** O/S	PISTON **0.25mm** O/S	PISTONE **0.25mm** O/S	PISTON **0.25mm** O/S	2
	REC66T-11636-01K	66T-11636-01	PISTÓN **0.50mm** O/S	PISTON **0.50mm** O/S	PISTONE **0.50mm** O/S	PISTON **0.50mm** O/S	
	REC66T-11603-00	66T-11603-00	KIT SEGMENTOS **STD**	PISTON RING SET **STD**	KIT FASCE **STD**	KIT SEGMENTS **STD**	
33	REC66T-11604-00	66T-11604-00	KIT SEGMENTOS **0.25mm** O/S	PISTON RING SET **0.25mm** O/S	KIT FASCE **0.25mm** O/S	KIT SEGMENTS **0.25mm** O/S	2
	REC66T-11605-00	66T-11605-00	KIT SEGMENTOS **0.50mm** O/S	PISTON RING SET **0.50mm** O/S	KIT FASCE **0.50mm** O/S	KIT SEGMENTS **0.50mm** O/S	
34	REC93102-30M56	93102-30M56	RETÉN DE ACEITE	OIL SEAL	PARAOLIO	JOINT SPI	2
35	REC93101-16001	93101-16001	RETÉN DE ACEITE	OIL SEAL	PARAOLIO	JOINT SPI	2
36	REC93210-65M50	93210-65M50	TÓRICA	O-RING	O-RING	JOINT TORIQUE	1
37	REC66T-45113-A0	66T-45113-A00	JUNTA BASE MOTOR	GASKET ENGINE	GUARNIZIONE BASE MOTORE	JOINT DE TETE MOTRICE	1



REC2TU3
REC2TU6
P. 38


REF	OEM
REC66T-W0093-01	66T-W0093-01

P. 96

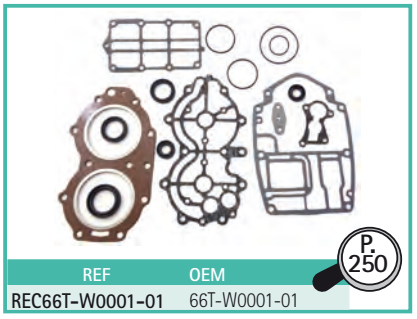
REF	OEM
REC66T-W0001-01	66T-W0001-01

P. 250

2T STROKES E40GMH/S/L • E40JMH • E40JWH • 40GWH • 40JWH

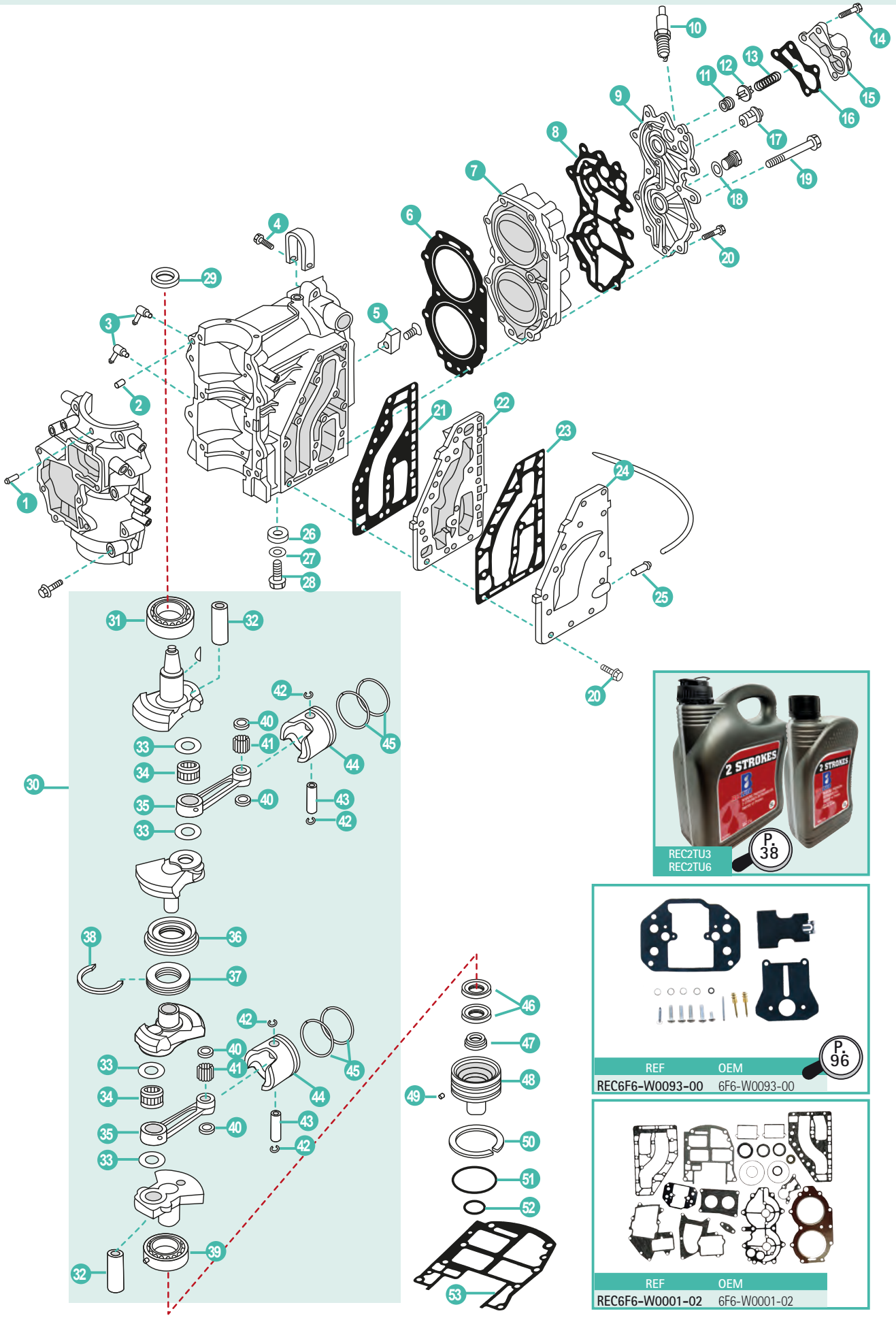

REC2TU3
REC2TU6

P. 38

REF	OEM
REC6F6-W0093-00	6F6-W0093-00

P. 96

REF	OEM
REC6F6-W0001-02	6F6-W0001-02

	REF	OEM					UN.
1	PAT15-04010202	624-14485-00	PIPA DE AGUA	PIPE, WATER	TUBO	RACCORD TUYAU D'EAU	1
2	PAF25-00000014	93608-12063	PIN CENTRADOR	HOLLOW PIN	SPINOTTO DI CENTRAGGIO	PIN DE CENTRAGE	2
3	REC650-11370-00	650-11370-01	NIPLE DE MANGUERA	NIPPLE	TUBO	RACCORD D'EAU	2
4	PAGB/T5783-M8X35	90101-08001	TORNILLO	BOLT	VITE	VIS	1
5	TEN01166	676-11325-00	ÁNODO	ANODO	ANODO	ANODE	1
6	REC6F5-11181-A2	6F5-11181-A1	JUNTA CULATA	GASKET, CYLINDER HEAD	GUARNIZIONE TESTATA	JOINT DE CULASSE	1
7	REC6F6-11111-00-1S	6F6-11111-00-1S	CULATA DE CILINDRO	CYLINDER HEAD	TESTA CILINDRO	CULASSE	1
8	REC6F6-11193-A1	6F6-11193-A1	JUNTA TAPA	GASKET, COVER	GUARNIZIONE COPERCHIO	JOINT DE COUVRE CULASSE	1
9	REC6F6-11191-00-1S	6F6-11191-00-1S	TAPA CULATA DE CILINDRO	HEAD CYLINDER COVER	COPERCHIO TESTATA CILINDRO	CUVERCLE DE CULASSE	1
10	NGKB7HS	94702-00040	BUJÍA	SPARK PLUG	CANDELA	BOUGIE	2
11	REC90480-18065	90480-18065	TAPÓN	PLUG	TAPPO	BOUCHON	1
12	REC663-12416-00	663-12416-00	VÁLVULA DE PRESIÓN	VALVE, PRESS CONTROL	VALVOLA DI PRESSIONE	SOUPAPE DE PRESSION	1
13	REC90501-14M02	90501-14M02	RESORTE DE COMPRESIÓN	SPRING COMPRESSION	MOLLA DI COMPRESSIONE	RESSORT	1
14	PAGB/T5783-M6X30	90119-06MA4	TORNILLO CON ARANDELA	BOLT, FLANGE	VITE CON RONDELLA	VIS DE BRIDE	4
15	REC6E9-12413-00-1S	6E9-12413-00-1S	TAPA TERMOSTATO	COVER, THERMOSTAT	COPERCHIO TERMOSTATO	COUVERCLE THERMOSTAT	1
16	REC6E9-12414-A1	6E9-12414-A1	JUNTA TAPA TERMOSTATO	GASKET, THERMOSTAT COVER	GUARNIZIONE COPERCHIO TERMOSTATO	JOINT COUVERCLE DE THERMOSTAT	1
17	REC6F5-12411-03	6F5-12411-02	TERMOSTATO	THERMOSTAT	TERMOSTATO	THERMOSTAT	1
18	PAF15-04000003	90430-14115	JUNTA	GASKET	GUARNIZIONE	JOINT	1
19	PAGB/T5783-M6X25	90119-08MA5	TORNILLO	BOLT	VITE	VIS	11
20	PAGB/T5783-M6X25	90119-06MA3	TORNILLO CON ARANDELA	BOLT, FLANGE	VITE CON RONDELLA	VIS DE BRIDE	20
21	REC6F5-41112-A0	6F5-41112-A0	JUNTA DE ESCAPE	EXHAUST GASKET	GUARNIZIONE DI SCARICO	JOINT D'ECHAPPEMENT	1
22	REC6F5-41111-01-1S	6F5-41111-01-1S	CUBIERTA INTERIOR DE ESCAPE	INNER EXHAUST COVER	COPERCHIO INTERIORE SCARICO	COUVERCLE INTERIEUR D'ECHAPPEMENT	1
23	REC6F5-41114-A0	6F5-41114-A0	JUNTA EXTERIOR, TAPA DE ESCAPE	GASKET, EXHAUST OUTER COVER	GUARNIZIONE ESTERIORE, COPERCHIO SCARICO	JOINT DE COUVERCLE EXT ECHAPPEMENT	1
24	REC6F5-41113-A0-1S	6F5-41113-01-1S	CUBIERTA EXTERIOR DE ESCAPE	OUTTER EXHAUST COVER	COPERCHIO ESTERNO SCARICO	COUVERCLE EXTERIEUR D'ECHAPPEMENT	1
25	PAF4-04010102	650-24378-00	PIPA DE AGUA	PIPE, WATER	TUBO	RACCORD TUYAU D'EAU	1
26	TEN01127	676-45251-00	ÁNODO	ANODE	ANODO	ANODE	1
27	PAGB/T97.1-6	92995-06600	ARANDELA	WASHER	RONDELLA	RONDELLE	1
28	PAGB/T5783-M6X16	97095-06016	TORNILLO	BOLT	VITE	VIS	1
29	REC93102-35M18	93102-35M18	RETÉN DE ACEITE	OIL SEAL	PARAOLIO	JOINT SPI	1
30	REC6F6-11400-02	6F6-11400-01	CIGÜEÑAL COMPLETO	CRANK ASSY	ALBERO MOTORE COMPLETO	VILEBREQUIN COMPLET	1
31	REC93306-307U0	93306-307U0	RODAMIENTO	BALL BEARING	CUSCINETTO	ROULEMENT À BILLE	1
32	REC6F5-11681-00	6F5-11681-00	PIN	PIN	SPINOTTO	PIN D'ENTRAINEMENT	2
33	REC90209-27M07	90209-27M07	ARANDELA DE SEPARACIÓN	WASHER	RONDELLA DISTANZIALE	RONDELLE	14
34	REC93310-727V7	93310-727V7	COJINETE DE BIELA	BEARING, CONNECTING ROD	CUSCINETTO BIELLA	PALIER DE BIELLE	2
35	REC6F5-11651-00	6F5-11651-00	BIELA	ROD, CONNECTING	BIELLA	BIELLE	2
36	REC93332-000UE	93332-000UE	COJINETE	BEARING	CUSCINETTO	PALIER	1
37	REC6F5-11515-00	6F5-11515-00	SELLO LABERINTO	LABERINTH SEAL	GUARNIZIONE SIGILLATA	JOINT	1
38	REC93440-68M03	93440-68M03	CIRCLIP	CIRCLIP	CIRCLIP	CIRCLIP	1
39	REC93306-306V1	93306-303V1	COJINETE	BEARING	CUSCINETTO	PALIER	1
40	REC90201-20417	90201-20417	ARANDELA PLANA	FLAT WASHER	RONDELLA PIANA	RONDELLE	4
41	REC93603-21111	93603-21111	AGUJA PASADOR	NEEDLE PIN	SPILLO	CLAVETTE	56
42	REC663-11634-00	663-11634-00	CIRCLIP	CIRCLIP	CIRCLIP	CIRCLIP	4
43	REC6F5-11633-00	6F5-11633-00	PIN, PISTÓN	PIN, PISTON	SPINOTTO PISTONE	AXE DE PISTON	2
	REC6F6-11631-00K	6F6-11631-00-95	PISTÓN **STD**	PISTON **STD**	PISTONE **STD**	PISTON **STD**	
44	REC6F6-11635-00K	6F6-11635-00	PISTÓN **0.25mm** O/S	PISTON **0.25mm** O/S	PISTONE **0.25mm** O/S	PISTON **0.25mm** O/S	2
	REC6F6-11636-00K	6F6-11636-00	PISTÓN **0.50mm** O/S	PISTON **0.50mm** O/S	PISTONE **0.50mm** O/S	PISTON **0.50mm** O/S	
	REC6F5-11610-00	6F6-11610-00	KIT SEGMENTOS **STD**	PISTON RING SET **STD**	KIT FASCE **STD**	KIT SEGMENTS **STD**	
45	REC6F5-11610-10	6F6-11610-010	KIT SEGMENTOS **0.25mm** O/S	PISTON RING SET **0.25mm** O/S	KIT FASCE **0.25mm** O/S	KIT SEGMENTS **0.25mm** O/S	2
	REC6F5-11610-20	6F6-11610-20	KIT SEGMENTOS **0.50mm** O/S	PISTON RING SET **0.50mm** O/S	KIT FASCE **0.50mm** O/S	KIT SEGMENTS **0.50mm** O/S	
46	REC93101-30M33	93101-30M33	RETÉN DE ACEITE	OIL SEAL	PARAOLIO	JOINT SPI	2
47	REC93104-16M01	93104-16M01	RETÉN DE ACEITE	OIL SEAL	PARAOLIO	JOINT SPI	1
48	REC6F5-15396-01-5B	6F5-15396-01-5B	CUERPO DEL RETÉN	SHELL, OIL SEAL	GUARNIZIONE CORPO	LOGEMENT JOINT SPI	1
49	PAGB/T879.4-3X20	91690-30010	PASADOR DE RESORTE	PIN, SPRING	SPINOTO DI RITORNO	GOUPILLE FENDUE	1
50	REC93440-68M03	93440-68M03	CIRCLIP	CIRCLIP	CIRCLIP	CIRCLIP	1
51	REC93210-65M50	93210-65M50	TÓRICA	O-RING	O-RING	JOINT TORIQUE	1
52	REC93210-22M02	93210-22M02	TÓRICA	O-RING	O-RING	JOINT TORIQUE	1
53	REC6F5-45113-A0	6F5-45113-A0	JUNTA BASE MOTOR	GASKET ENGINE	GUARNIZIONE BASE MOTORE	JOINT DE TETE MOTRICE	1

2T STROKES 25Q/QEO · 40A/C • 40ELR • 40H/HE • 40MLHZ • 40O/OS • 40TLR • 40V/VE/VEO/VETO/VMHO • 40YETO/Z 50D/DE • 50H/HEDO/HETO/HMHD/HWHDLO/HRDO • 50MTO

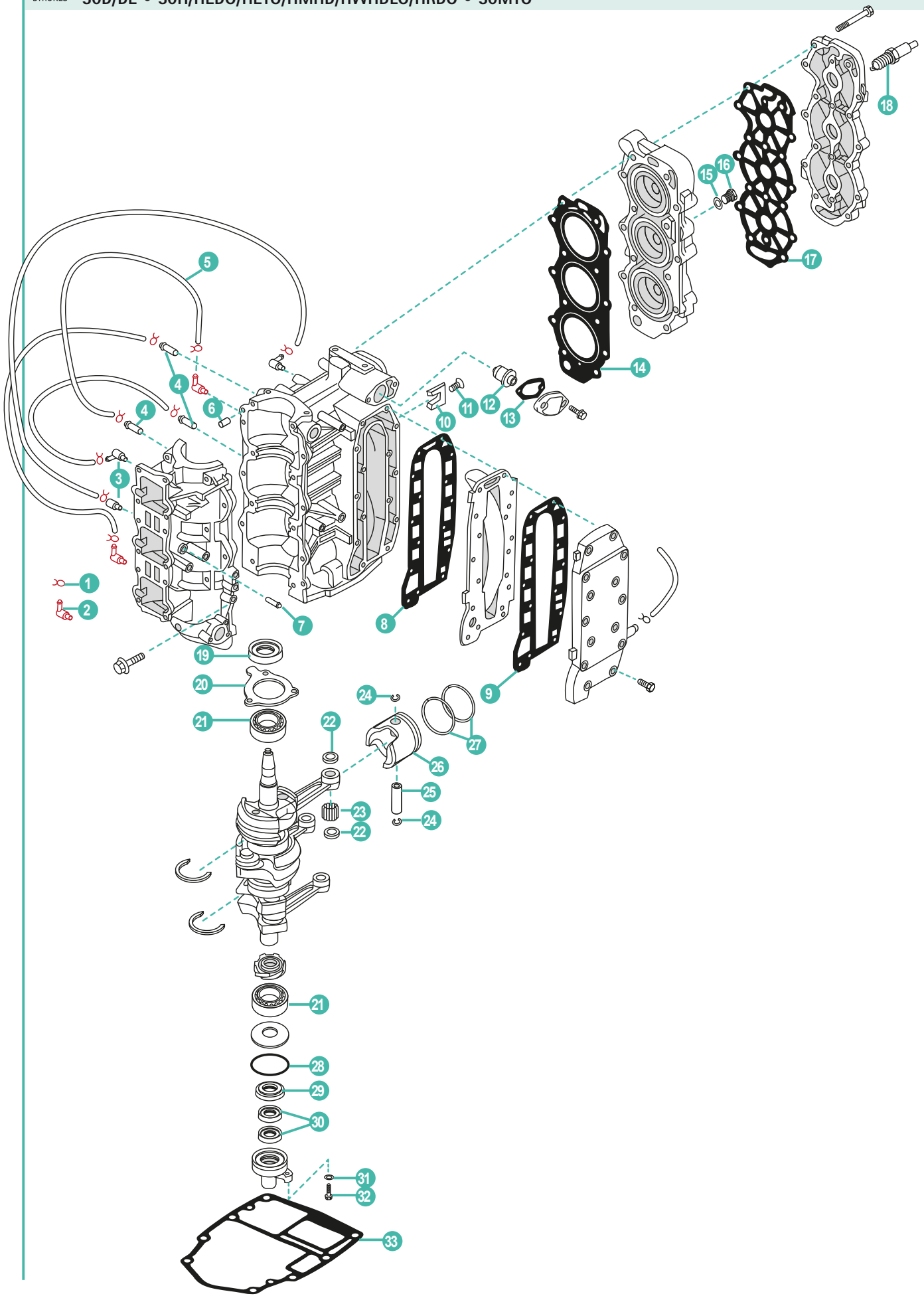

	REF	OEM					UN.
1	PAHT-2.5X60	90467-06016	CLIP	CLIP	CLIP	CLIP	8
2	REC688-11370-00	688-11370-01	NIPLE DE MANGUERA	NIPPLE	TUBO	RACCORD D'EAU	2
3	REC650-11370-00	650-11370-01	NIPLE DE MANGUERA	NIPPLE	TUBO	RACCORD D'EAU	2
4	REC624-14485-00	624-14485-00	PIPA DE AGUA	PIPE, WATER	TUBO	RACCORD TUYAU D'EAU	3
5	PAF2.6-04000015	90445-07MA3	TUBO L200	HOSE L200	TUBO L200	TUYAU L200	1
6	REC93606-12019	93606-12019	PIN CENTRADOR	HOLLOW PIN	SPINOTTO DI CENTRAGGIO	PIN DE CENTRAGE	2
7	PAF4-04010102	650-24378-00	PIPA DE AGUA	PIPE, WATER	TUBO	RACCORD TUYAU D'EAU	1
8	REC6H4-41112-A0	6H4-41112-A0	JUNTA DE ESCAPE	EXHAUST GASKET	GUARNIZIONE DI SCARICO	JOINT D'ECHAPPEMENT	1
9	REC6H4-41114-A0	6H4-41114-A0	JUNTA EXTERIOR, TAPA DE ESCAPE	GASKET, EXHAUST OUTER COVER	GUARNIZIONE ESTERIORE, COPERCHIO SCARICO	JOINT DE COUVERCLE EXT ECHAPPEMENT	1
10	TEN01147	688-11325-00	ÁNODO	ANODE	ANODO	ANODE	2
11	PAGB/T820-M4X12	98780-04016	TORNILLO	SCREW	VITE	VIS	2
12	REC6E5-12411-30	6E5-12411-30	TERMOSTATO	THERMOSTAT	TERMOSTATO	THERMOSTAT	1
13	REC61A-12414-A0	6J8-12414-A0	JUNTA TAPA TERMOSTATO	GASKET, THERMOSTAT COVER	GUARNIZIONE COPERCHIO TERMOSTATO	JOINT COUVERCLE DE THERMOSTAT	1
14	REC63D-11181-A1	63D-11181-A2	JUNTA CULATA	GASKET, CYLINDER HEAD	GUARNIZIONE TESTATA	JOINT DE CULASSE	1
15	PAF15-04000003	90430-14115	JUNTA	GASKET	GAURNIZIONE	JOINT	1
16	PAF15-04000002	90340-14M00	TAPÓN	PLUG	TAPPO	BOUCHON	1
17	REC63D-11193-A0	63D-11193-A0	JUNTA TAPA	GASKET, COVER	GUARNIZIONE COPERCHIO	JOINT COUVERCLE	1
18	NGKBR8HS-10	94702-00247	BUJÍA	SPARK PLUG	CANDELA	BOUGIE	3
	NGKBR7HS-10	94702-00271	BUJÍA	SPARK PLUG	CANDELA	BOUGIE	
19	REC93102-23096	93102-23096	RETÉN DE ACEITE	OIL SEAL	PARAOLIO	JOINT SPI	1
20	REC6H4-15369-A1	6H4-15369-A1	JUNTA DE CUERPO	GASKET, OIL SEAL HOUSING	GUARNIZIONE CORPO	JOINT	1
21	REC93306-305U8	93306-305-U8	RODAMIENTO	BEARING	CUSCINETTO	PALIER	2
22	REC6H4-11641-00	6H4-11641-00	ARANDELA	WASHER	RONDELLA	RONDELLE	6
23	REC93602-20M02	93602-20M02	AGUJA DE RODAMIENTO	BEARING NEEDLE	SPILLO DE CUSCINETTO	CLAVETTE DE PALIER	93
24	REC6H4-11634-01	6H4-11634-01	CIRCLIP	CIRCLIP	CIRCLIP	CIRCLIP	6
25	REC648-11633-00	648-11633-00	PIN, PISTÓN	PIN, PISTON	SPINOTTO PISTONE	AXE DE PISTON	3
26	REC6H4-11631-01K	6H4-11631-01-95	PISTÓN **STD**	PISTON **STD**	PISTONE **STD**	PISTON **STD**	3
	REC6H4-11635-01K	6H4-11635-01	PISTÓN **0.25mm** O/S	PISTON **0.25mm** O/S	PISTONE **0.25mm** O/S	PISTON **0.25mm** O/S	
	REC6H4-11636-01K	6H4-11636-01	PISTÓN **0.50mm** O/S	PISTON **0.50mm** O/S	PISTONE **0.50mm** O/S	PISTON **0.50mm** O/S	
27	REC63D-11603-00	63D-11603-00	KIT SEGMENTOS **STD**	PISTON RING SET **STD**	KIT FASCE **STD**	KIT SEGMENTS **STD**	3
	REC63D-11605-00	63D-11605-00	KIT SEGMENTOS DE PISTÓN **0.50mm** O/S	PISTON RING SET **0.50mm** O/S	KIT FASCE **0.50mm** O/S	KIT SEGMENTS **0.50mm** O/S	
28	REC93210-58M21	93210-58M21	TÓRICA	O-RING	O-RING	JOINT TORIQUE	1
29	REC93102-25M28	93102-25M28	RETÉN DE ACEITE	OIL SEAL	PARAOLIO	JOINT SPI	1
30	REC93104-16M01	93104-16M01	RETÉN DE ACEITE	OIL SEAL	PARAOLIO	JOINT SPI	2
31	PAGB/T5783-M5X12	92995-06600	ARANDELA	WASHER	RONDELLA	RONDELLE	1
32	PAGB/T5783-M6X20	97095-06020	TORNILLO	BOLT	VITE	VIS	1
33	REC6H4-45113-00	6H4-45113-00	JUNTA BASE MOTOR	GASKET ENGINE	GUARNIZIONE BASE MOTORE	JOINT DE TETE MOTRICE	1

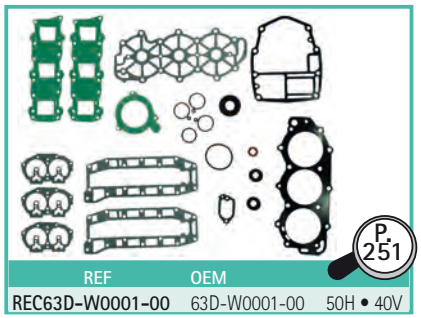

REF	OEM	
REC63D-W0001-00	63D-W0001-00	50H • 40V

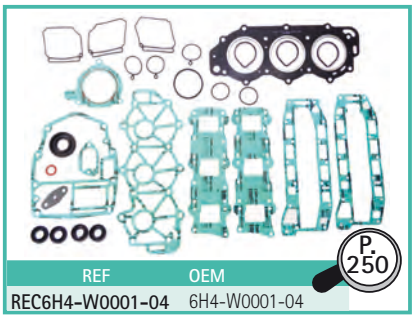

REF	OEM
REC6H4-W0001-04	6H4-W0001-04

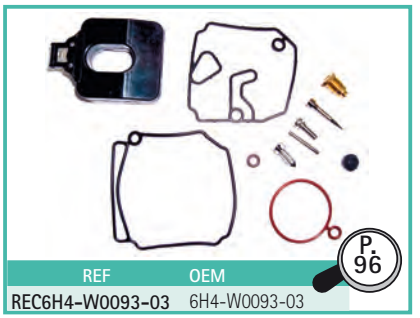

REF	OEM
REC6H4-W0093-03	6H4-W0093-03

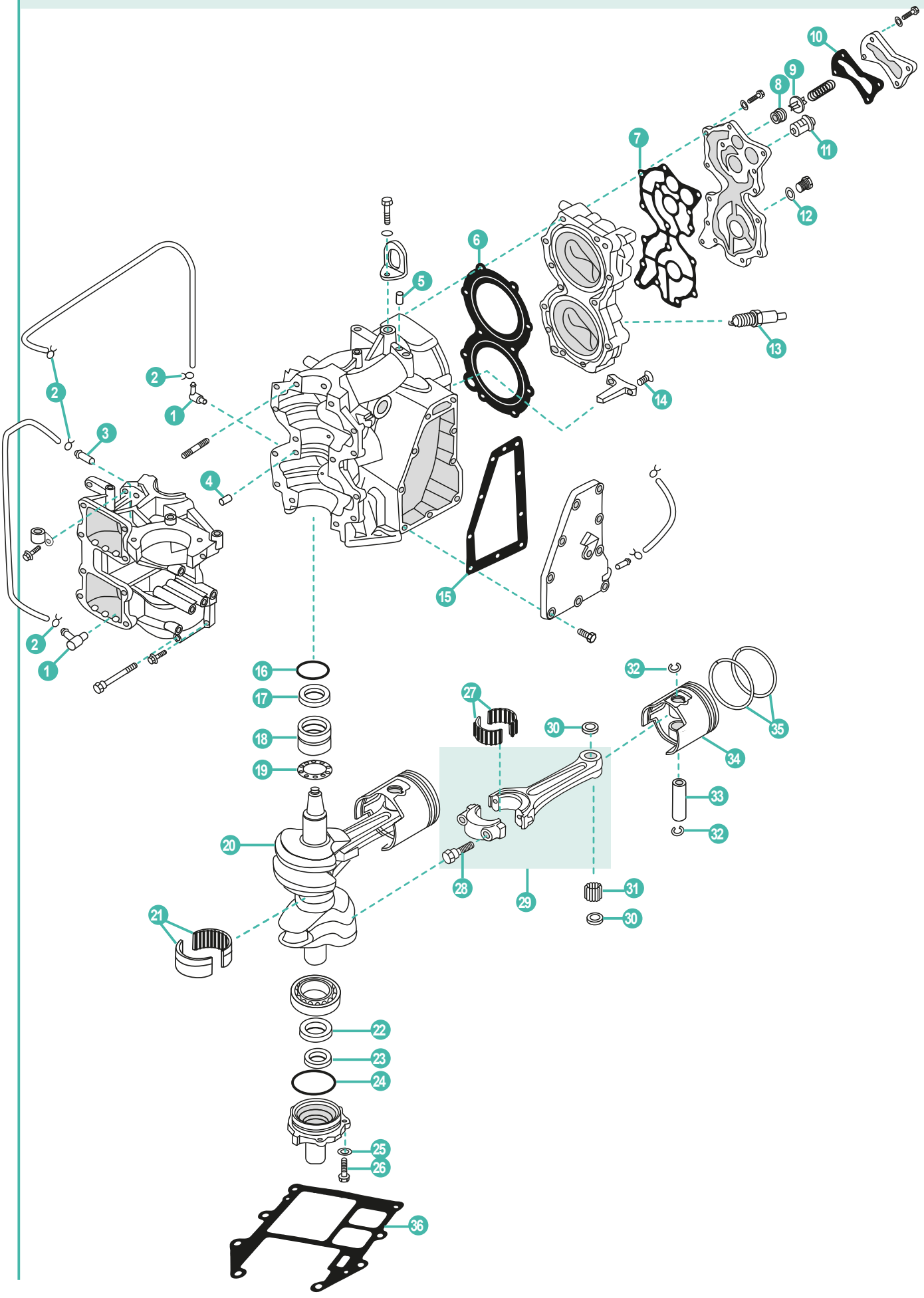
1
2
3
4
5
6
7
8
9
10
11
12
13
14
15
16
17
18
19
20
21
22
23
24
25
26
27
28
29
30
31
32
33
34
35
36

	REF	OEM					UN.
1	REC650-11370-00	650-11370-01	NIPLE DE MANGUERA	NIPPLE	TUBO	RACCORD D'EAU	2
2	PAHT-2.5X60	90467-06016	PRESILLA	CLIP	CLIP	CLIP	4
3	REC624-14485-00	624-14485-00	PIPA DE AGUA	PIPE, WATER	TUBO	RACCORD TUYAU D'EAU	1
4	PAF25-00000014	93608-12063	PIN CENTRADOR	HOLLOW PIN	SPINOTTO DI CENTRAGGIO	PIN DE CENTRAGE	1
5	PAF25-04000007	93604-08062	PIN CENTRADOR	HOLLOW PIN	SPINOTTO DI CENTRAGGIO	PIN DE CENTRAGE	1
6	REC697-11181-A1	697-11181-A2	JUNTA CULATA	GASKET, CYLINDER HEAD	GUARNIZIONE TESTATA	JOINT DE CULASSE	1
7	REC663-11193-00	663-11193-A0	JUNTA TAPA	GASKET, COVER	GUARNIZIONE COPERCHIO	JOINT DE COUVRE CULASSE	1
8	REC90480-18065	90480-18065	TAPÓN	GROMMET	TAPPO	BOUCHON	1
9	REC663-12416-00	663-12416-00	VÁLVULA DE PRESIÓN	VALVE, PRESSURE CONTROL	VALVOLA DI PRESSIONE	SOUPAPE DE PRESION	1
10	REC663-12414-00	663-12414-A0	JUNTA TAPA TERMOSTATO	GASKET, THERMOSTAT COVER	GUARNIZIONE COPERCHIO TERMOSTATO	JOINT COUVERCLE DE THERMOSTAT	1
11	REC6F5-12411-03	6F5-12411-02	TERMOSTATO	THERMOSTAT	TERMOSTATO	THERMOSTAT	1
12	PAF15-04000003	90430-14115	JUNTA	GASKET	GUARNIZIONE	JOINT	1
	NGKB8HS-10	94702-00160	BUJÍA **55E**	SPARK PLUG **55E**	CANDELA **55E**	BOUGIE **55E**	
13	NGKB7HS	94702-00040	BUJÍA **E48**	SPARK PLUG **E48**	CANDELA **E48**	BOUGIE **E48**	2
	NGKB8HS	94702-00041	BUJÍA **E55C**	SPARK PLUG **E55C**	CANDELA **E55C**	BOUGIE **E55C**	
14	PAGB/T820-M4X12	98780-04015	TORNILLO CABEZA PLANA	SCREW, FLAT HEAD	VITE TESTA PLANA	VIS	2
15	REC663-41114-00	663-41114-A0	JUNTA DE ESCAPE	EXHAUST GASKET	GUARNIZIONE DI SCARICO	JOINT D'ECHAPPEMENT	1
16	REC93210-42159	93210-42159	TÓRICA	O-RING	O-RING	JOINT TORIQUE	1
17	REC93102-32M07	93102-32M07	RETÉN DE ACEITE	OIL SEAL	PARAOLIO	JOINT SPI	1
18	REC93311-632U1	93311-632U1	COJINETE DE RODILLOS	BEARING	CUSCINETTO A RULLI	ROULEMENT À BILLE	1
19	REC663-11561-00	663-11561-00	ARANDELA PLANA	CHIM, RANK	SPESSORE		1
20	REC663-11411-00	663-11411-01	CIGÜEÑAL	CRANK SHAFT	ALBERO MOTORE	VILEBREQUIN	1
21	REC93311-832U4	93311-832U4	COJINETE DE RODILLOS	BEARING	CUSCINETTO A RULLI	ROULEMENT À BILLE	1
22	REC93102-28135	93102-28135	RETÉN DE ACEITE	OIL SEAL	PARAOLIO	JOINT SPI	1
23	REC93104-18049	93104-18049	RETÉN DE ACEITE	OIL SEAL	PARAOLIO	JOINT SPI	1
24	REC93210-62269	93210-62269	TÓRICA	O-RING	O-RING	JOINT TORIQUE	1
25	PAGB/T97.1-6	92995-06600	ARANDELA	WASHER	RONDELLA	RONDELLE	3
26	PAGB/T5783-M6X16	97095-06016	PERNO	BOLT	PERNO	BOULON	3
27	REC93310-730V8	93310-730V8	COJINETE DE RODILLOS	BEARING	CUSCINETTO A RULLI	ROULEMENT À BILLE	2
28	REC90109-08022	90109-08022	PERNO	BOLT	PERNO	BOULON	2
29	REC688-11650-03	688-11650-03	BIELA COMPLETA	CONNECTING ROD ASSY	BIELLA COMPLETA	BIELLE COMPLÈTE	2
30	REC90201-20417	90201-20417	ARANDELA PLANA	WASHER	RONDELLA PIANA	RONDELLE	4
31	REC93603-21111	93603-21111	AGUJA DE RODAMIENTO	BEARING NEEDLE	SPILLO DE CUSCINETTO	CLAVETTE DE PALIER	56
32	REC688-11634-00	688-11634-00	CIRCLIP	CIRCLIP	CIRCLIP	CIRCLIP	4
33	REC663-11633-00	663-11633-00	PIN, PISTÓN	PIN, PISTON	SPINOTTO PISTONE	AXE DE PISTON	2
	REC688-11631-03K	688-11631-03-94	PISTÓN **STD**	PISTON **STD**	PISTONE **STD**	PISTON **STD**	
34	REC688-11635-03K	688-11635-03	PISTÓN **0.25mm** O/S	PISTON **0.25mm** O/S	PISTONE **0.25mm** O/S	PISTON **0.25mm** O/S	2
	REC688-11636-03K	688-11636-03	PISTÓN **0.50mm** O/S	PISTON **0.50mm** O/S	PISTONE **0.50mm** O/S	PISTON **0.50mm** O/S	
35	REC688-11603-A0	688-11603-A0	KIT SEGMENTOS **STD**	PISTON RING SET **STD**	KIT FASCE **STD**	KIT SEGMENTS **STD**	2
	REC688-11605-A0	688-11605-A0	KIT SEGMENTOS DE PISTÓN **0.50mm** O/S	PISTON RING SET **0.50mm** O/S	KIT FASCE **0.50mm** O/S	KIT SEGMENTS **0.50mm** O/S	
36	REC696-45113-00	696-45113-00	JUNTA BASE MOTOR	GASKET ENGINE	GUARNIZIONE BASE MOTORE	JOINT DE TETE MOTRICE	1



P. 38
REC2TU3
REC2TU6

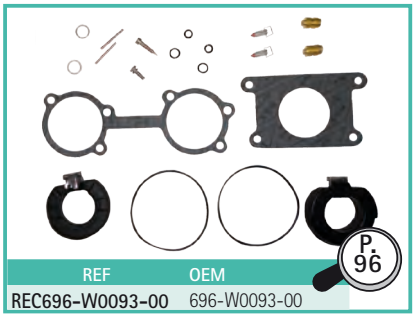
P. 96

REF	OEM
REC696-W0093-00	696-W0093-00

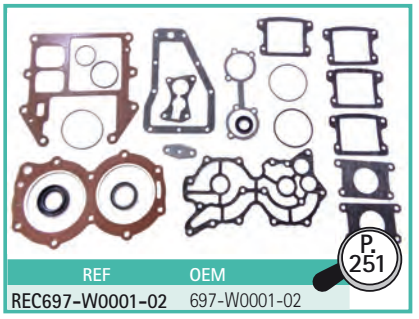
P. 251

REF	OEM
REC697-W0001-02	697-W0001-02

2T STROKES 50G/GEO/GETO • 60F/FEDO/FEHT/FEO/FET/FETO • 60TDR/TLR-B/TR-Z • 70B/BEHDO/BEMO/BEO/BETO • 70TDR/TR

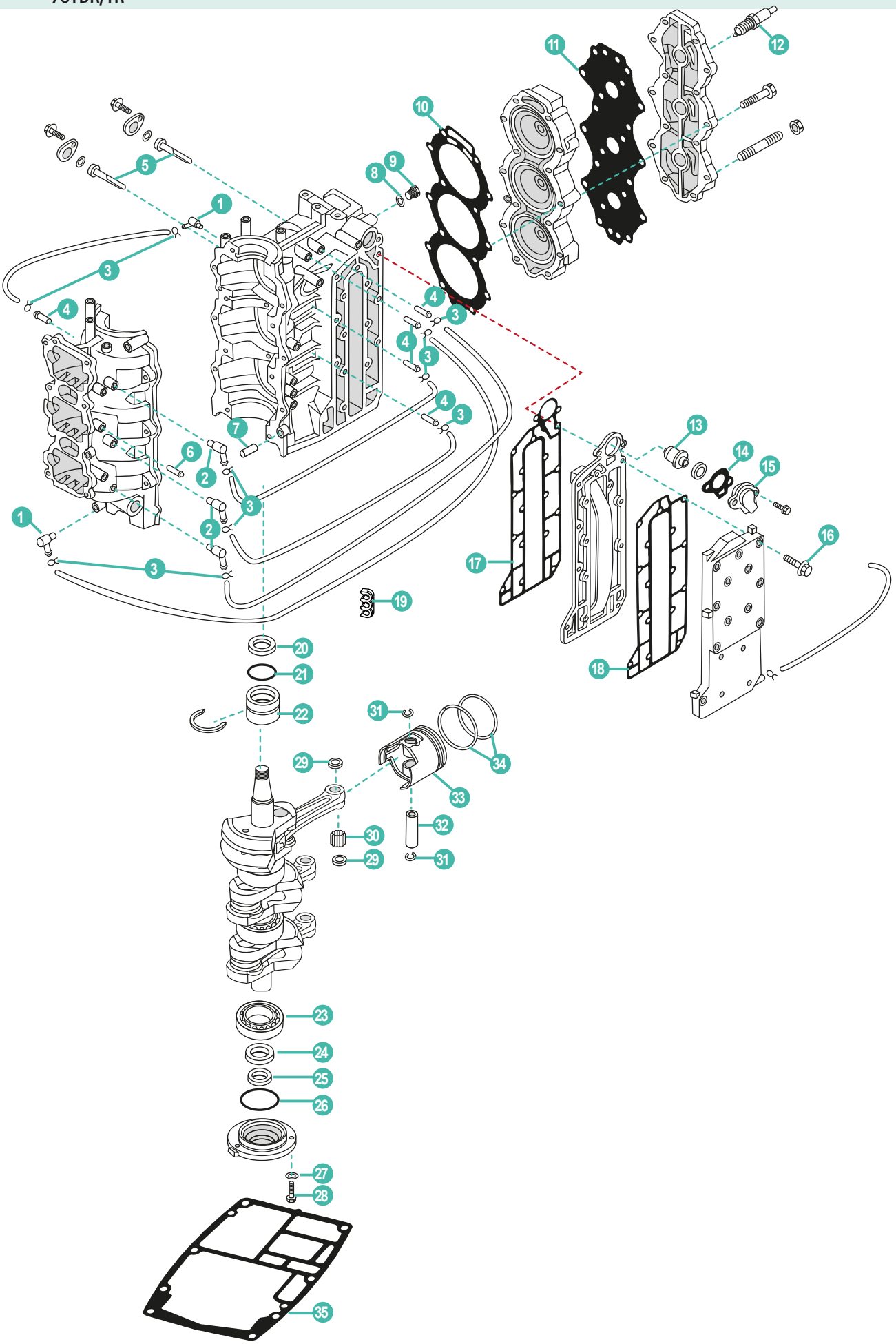

	REF	OEM					UN.
1	REC688-11370-00	688-11370-01	NIPLE DE MANGUERA	NIPPLE	TUBO	RACCORD D'EAU	2
2	REC650-11370-00	650-11370-01	NIPLE DE MANGUERA	NIPPLE	TUBO	RACCORD D'EAU	3
3	PAHT-2.5X60	90467-06016	CLIP	CLIP	CLIP	CLIP	10
4	REC624-14485-00	624-14485-00	PIPA DE AGUA	PIPE, WATER	TUBO	RACCORD TUYAU D'EAU	5
5	CM6H3-11325-01A	6H3-11325-01	ÁNODO	ANODE	ANODO	ANODE	2
6	PAF4-04010102	650-24378-00	PIPA DE AGUA	PIPE, WATER	TUBO	RACCORD TUYAU D'EAU	4
7	PAF25-00000014	93608-12063	PIN CENTRADOR	HOLLOW PIN	SPINOTTO DI CENTRAGGIO	PIN DE CENTRAGE	2
8	PAF15-04000003	90430-14115	JUNTA	GASKET	GUARNIZIONE	JOINT	1
9	PAF15-04000002	90340-14M00	TAPÓN	PLUG STRAIGHT SREW	TAPPO	BOUCHON	1
10	REC6H3-11181-A0	6H3-11181-A2	JUNTA CULATA	GASKET, CYLINDER HEAD	GUARNIZIONE TESTATA	JOINT DE CULASSE	1
11	REC6H3-11193-A1	6H3-11193-A1	JUNTA CULATÍN	GASKET COVER	GUARNIZIONE COPERCHIO	JOINT DE COUVRE CULASSE	1
12	NGKBR8HS-10	94702-00247	BUJÍA	SPARK PLUG	CANDELA	BOUGIE	3
13	REC6H3-12411-10	6H3-12411-10	TERMOSTATO	THERMOSTAT	TERMOSTATO	THERMOSTAT	1
14	REC6H3-12414-A1	6H3-12414-A1	JUNTA TAPA TERMOSTATO	GASKET, THERMOSTAT COVER	GUARNIZIONE COPERCHIO TERMOSTATO	JOINT COUVERCLE DE THERMOSTAT	1
15	PAF15-07010021	6H3-12413-00-1S	TAPA TERMOSTATO	COVER, THERMOSTAT	COPERCHIO TERMOSTATO	COUVERCLE DE THERMOSTAT	1
16	PAGB/T5782-M6X35	90119-06MA5	TORNILLO	BOLT	VITE	VIS	16
17	REC6H3-41112-A0	6H3-41112-A0	JUNTA DE ESCAPE	EXHAUST GASKET	GUARNIZIONE DI SCARICO	JOINT D'ECHAPPEMENT	1
18	REC6H3-41114-A0	6H3-41114-A0	JUNTA EXTERIOR, TAPA DE ESCAPE	GASKET, EXHAUST OUTER COVER	GUARNIZIONE ESTERIORE, COPERCHIO SCARICO	JOINT DE COUVERCLE EXT ECHAPPEMENT	1
19	PAF25-05000016	90464-07M05	ABRAZADERA	CLAMP	FASCETTA	COLLIER	1
20	REC93102-36M24	93102-36M24	RETÉN DE ACEITE	OIL SEAL	PARAOLIO	JOINT SPI	1
21	REC93210-46M16	93210-46M16	TÓRICA	O-RING	O-RING	JOINT TORIQUE	1
22	REC93311-636U6	93311-636U6	RODAMIENTO	BEARING	CUSCINETTO	ROULEMENT À BILLE	1
23	REC93306-306V1	93306-306V1	RODAMIENTO	BEARING	CUSCINETTO	ROULEMENT À BILLE	1
24	REC93102-30M23	93102-30M23	RETÉN DE ACEITE	OIL SEAL	PARAOLIO	JOINT SPI	1
25	REC93106-18M01	93106-18M01	RETÉN DE ACEITE	OIL SEAL	PARAOLIO	JOINT SPI	1
26	REC93210-65M50	93210-65M50	TÓRICA	O-RING	O-RING	JOINT TORIQUE	1
27	PAGB/T97.1-8	92995-06600	ARANDELA	WASHER	RONDELLA	RONDELLE	3
28	PAGB/T5783-M6X20	97095-06020	TORNILLO	BOLT	VITE	VIS	3
29	REC90201-20417	90201-20417	ARANDELA	WASHER	RONDELLA	RONDELLE	6
30	REC93603-18M09	93603-18M09	AGUJA DE RODAMIENTO	BEARING NEEDLE	SPILLO DE CUSCINETTO	CLAVETTE DE PALIER	84
31	REC688-11634-00	688-11634-10	CIRCLIP	CIRCLIP	CIRCLIP	CIRCLIP	6
32	REC6H3-11633-00	6H3-11633-00	PIN, PISTÓN	PIN, PISTON	SPINOTTO PISTONE	AXE DE PISTON	3
	REC6H3-11631-01K	6H3-11631-01-96	PISTÓN **STD**	PISTON **STD**	PISTONE **STD**	PISTON **STD**	
33	REC6H3-11635-01K	6H3-11635-01	PISTÓN **0.25mm** O/S	PISTON **0.25mm** O/S	PISTONE **0.25mm** O/S	PISTON **0.25mm** O/S	3
	REC6H3-11636-01K	6H3-11636-01	PISTÓN **0.50mm** O/S	PISTON **0.50mm** O/S	PISTONE **0.50mm** O/S	PISTON **0.50mm** O/S	
	REC6K5-11601-02	6K5-11601-02	KIT SEGMENTOS **STD**	PISTON RING SET **STD**	KIT FASCE **STD**	KIT SEGMENTS **STD**	
34	REC6K5-11601-12	6K5-11601-12	KIT SEGMENTOS DE PISTÓN **0.25mm** O/S	PISTON RING SET **0.25mm** O/S	KIT FASCE **0.25mm** O/S	KIT SEGMENTS **0.25mm** O/S	3
	REC6K5-11601-22	6K5-11601-22	KIT SEGMENTOS DE PISTÓN **0.50mm** O/S	PISTON RING SET **0.50mm** O/S	KIT FASCE **0.50mm** O/S	KIT SEGMENTS **0.50mm** O/S	
35	REC6H3-45113-00	6H3-45113-00	JUNTA BASE MOTOR	GASKET ENGINE	GUARNIZIONE BASE MOTORE	JOINT DE TETE MOTRICE	1



P. 38
REC2TU3
REC2TU6

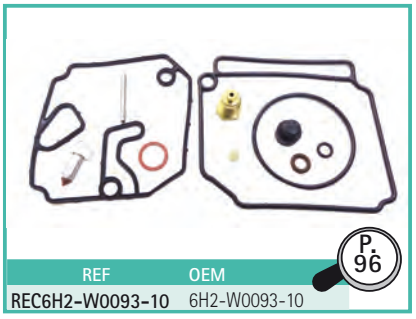
P. 96

REF	OEM
REC6H2-W0093-10	6H2-W0093-10

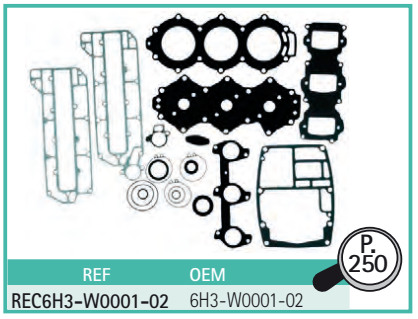
P. 250

REF	OEM
REC6H3-W0001-02	6H3-W0001-02

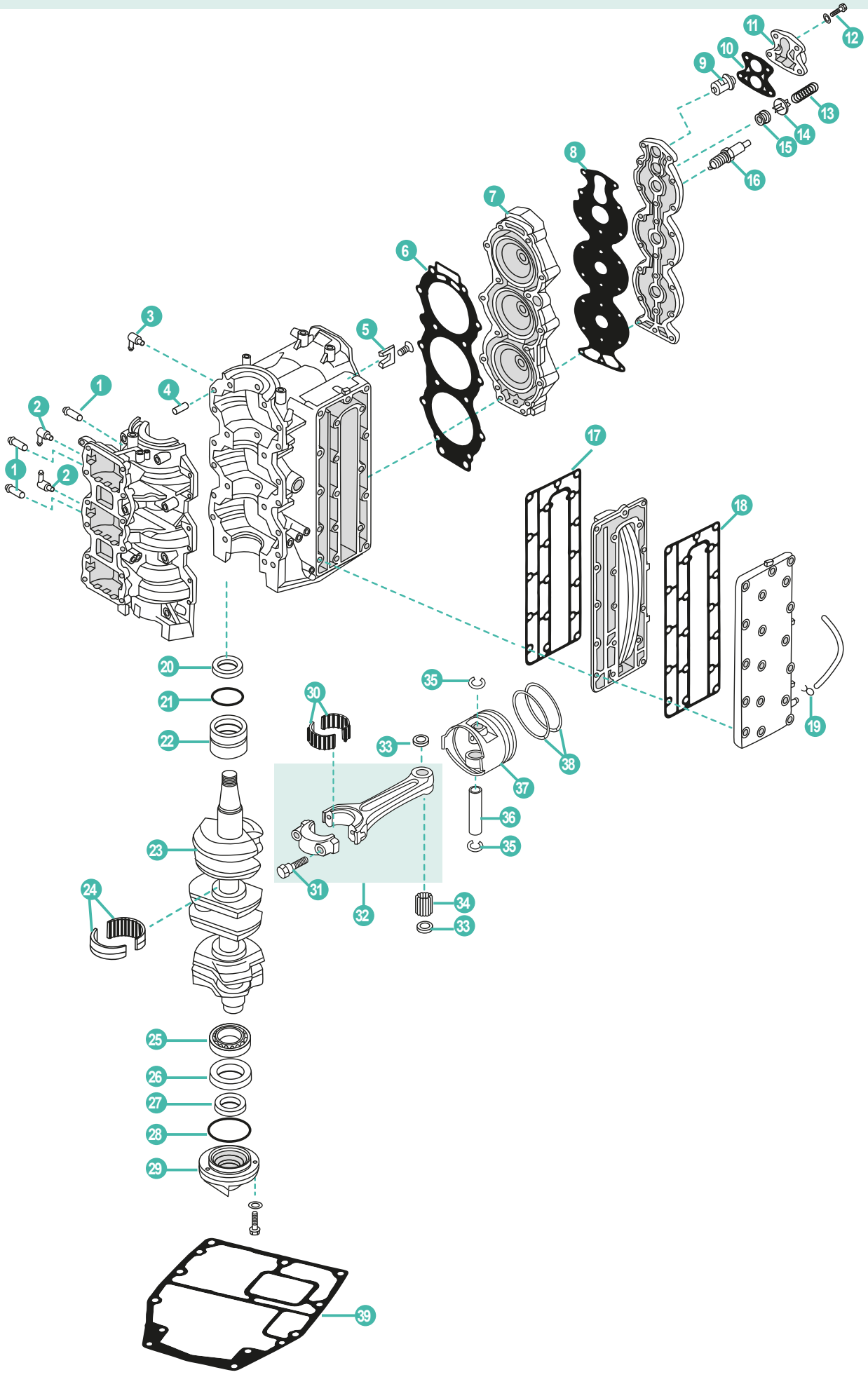
1
2
1
2
3
4
5
6
7
8
9
10
11
12
13
14
15
16
17
18
19
20
21
22
23
24
25
26
27
28
29
30
31
32
33
34
35
36
37
38
39

	REF	OEM					UN.
1	REC624-14485-00	624-14485-00	PIPA DE AGUA	PIPE, WATER	TUBO	RACCORD TUYAU D'EAU	4
2	REC688-11370-00	688-11370-01	NIPLE DE MANGUERA	NIPPLE	TUBO	RACCORD D'EAU	2
3	REC650-11370-00	650-11370-01	NIPLE DE MANGUERA	NIPPLE	TUBO	RACCORD D'EAU	1
4	PAF25-00000014	93608-12063	PIN CENTRADOR	HOLLOW PIN	SPINOTTO DI CENTRAGGIO	PIN DE CENTRAGE	2
5	TEN01147	688-11325-00	ÁNODO	ANODE	ANODO	ANODE	2
6	REC688-11181-A1	688-11181-A1	JUNTA CULATA	GASKET, CYLINDER HEAD	GUARNIZIONE TESTATA	JOINT DE CULASSE	1
7	REC688-11111-02-1S	688-11111-02-1S	CULATA	CYLINDER HEAD	TESTATA	CULASSE	1
8	REC688-11193-A1	688-11193-A1	JUNTA TAPA	GASKET, COVER	GUARNIZIONE COPERCHIO	JOINT DE COUVRE CULASSE	1
9	REC6E5-12411-30	688-12411-10	TERMOSTATO	THERMOSTAT	TERMOSTATO	THERMOSTAT	1
10	REC688-12414-A1	688-12414-A1	JUNTA TAPA TERMOSTATO	GASKET, THERMOSTAT COVER	GUARNIZIONE COPERCHIO TERMOSTATO	JOINT COUVERCLE DE THERMOSTAT	1
11	REC688-12413-00-1S	688-12413-00-1S	TAPA TERMOSTATO	COVER, THERMOSTAT	COPERCHIO TERMOSTATO	COUVERCLE DE THERMOSTAT	1
12	PAGB/T5783-M6X35	90119-06MA5	TORNILLO	BOLT, WITH WASHER	VITE	VIS	4
13	REC90501-16M11	90501-16M11	MUELLE	SPRING COMPRESSION	MOLLA	RESSORT	1
14	REC688-12416-00	688-12416-00	VÁLVULA CONTROL DE PRESIÓN	VALVE, PRESSURE CONTROL	VALVOLA ANTIPRESSIONE	SOUPAPE DE DEPRESSION	1
15	REC90480-20M05	90480-20M05	JUNTA GOMA	GROMMET	GUARNIZIONE GOMMA	JOINT	1
16	NGKB8HS-10	90472-00247	BUJÍA	SPARK PLUG	CANDELA	BOUGIE	3
17	REC688-41112-A0	688-41112-A0	JUNTA DE ESCAPE	EXHAUST GASKET	GUARNIZIONE DI SCARICO	JOINT D'ECHAPPEMENT	1
18	REC688-41114-A0	688-41114-A0	JUNTA EXTERIOR, TAPA DE ESCAPE	GASKET, EXHAUST OUTER COVER	GUARNIZIONE ESTERIORE, COPERCHIO SCARICO	JOINT DE COUVERCLE EXT ECHAPPEMENT	1
19	PAF4-04000030	90467-08004	PRESILLA	CLAMP	CLIP	CLIP	
20	REC93102-36M02	93102-36M02	RETÉN DE ACEITE	OIL SEAL	PARAOLIO	JOINT SPI	1
21	REC93210-46M16	93210-46M16	TÓRICA	O-RING	O-RING	JOINT TORIQUE	1
22	REC93310-636U4	93310-636U4	RODAMIENTO	BEARING	CUSCINETTO	PALIER	1
23	REC688-11411-00	688-11411-01	CIGÜEÑAL	CRANK ASSY	ALBERO MOTORE	VILEBREQUIN	1
24	REC93310-835U8	93310-835U8	RODAMIENTO	BEARING	CUSCINETTO	ROULEMENT À BILLE	2
25	REC93306-206U5	93306-206U5	RODAMIENTO	BEARING	CUSCINETTO	ROULEMENT À BILLE	1
26	REC93102-30M05	93102-30M05	RETÉN DE ACEITE	OIL SEAL	PARAOLIO	JOINT SPI	1
27	REC93104-20M02	93104-20M02	RETÉN DE ACEITE	OIL SEAL	PARAOLIO	JOINT SPI	1
28	REC93210-62269	93210-62269	TÓRICA	O-RING	O-RING	JOINT TORIQUE	1
29	REC6H1-15359-01-94	6H1-15359-01-94	CUERPO DEL RETÉN	SHELL, OIL SEAL	GUARNIZIONE CORPO	LOGEMENT JOINT D'HUILE	1
30	REC93310-730V8	93310-730V8	COJINETE DE BIELA	BEARING, CONNECTING ROD	CUSCINETTO BIELLA	PALIER DE BIELLE	3
31	REC90109-08022	90109-08022	TORNILLO	BOLT	VITE	VIS	2
32	REC688-11650-03	688-11650-03	BIELA	CONNECTING ROD ASSY	BEILLA	BIELLE	3
33	REC90201-20417	90201-20417	ARANDELA	WASHER PLATE	RONDELLA	RONDELLE	6
34	REC93603-21111	93603-21111	AGUJA DE RODAMIENTO	BEARING NEEDLE	SPILLO DE CUSCINETTO	CLAVETTE DE PALIER	84
35	REC688-11634-00	688-11634-00	CIRCLIP	CIRCLIP	CIRCLIP	CIRCLIP	6
36	REC663-11633-00	663-11633-00	PIN, PISTÓN	PIN, PISTON	SPINOTTO PISTONE	AXE DE PISTON	3
37	REC688-11631-03K	688-11631-03-94	PISTÓN **STD**	PISTON **STD**	PISTONE **STD**	PISTON **STD**	3
38	REC688-11603-A0 REC688-11605-A0	688-11603-A0 688-11605-A0	KIT SEGMENTOS **STD** KIT SEGMENTOS DE PISTÓN **0.50mm** O/S	PISTON RING SET **STD** PISTON RING SET **0.50mm** O/S	KIT FASCE **STD** KIT FASCE **0.50mm** O/S	KIT SEGMENTS **STD** KIT SEGMENTS **0.50mm** O/S	3
39	REC688-45113-A0	688-45113-A0	JUNTA BASE MOTOR	GASKET ENGINE	GUARNIZIONE BASE MOTORE	JOINT DE TETE MOTRICE	1



REC2TU3
REC2TU6
P. 38

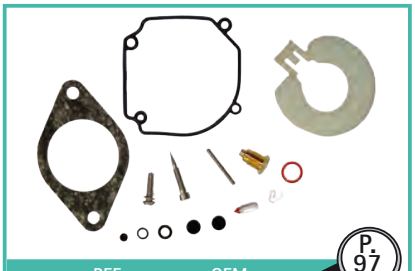
REF	OEM
REC6H1-W0093-01-00	6H1-W0093-01-00

P. 97


REF	OEM
REC688-W0001-A0	688-W0001-02

P. 251

2T STROKES 100A/AETO • 100TLR • 115AEL/B/BETO/BE-TR/C/CEO/CETO • C115TLR • 130B/BETO • 130TLR/TLRZ • 140A • 140B

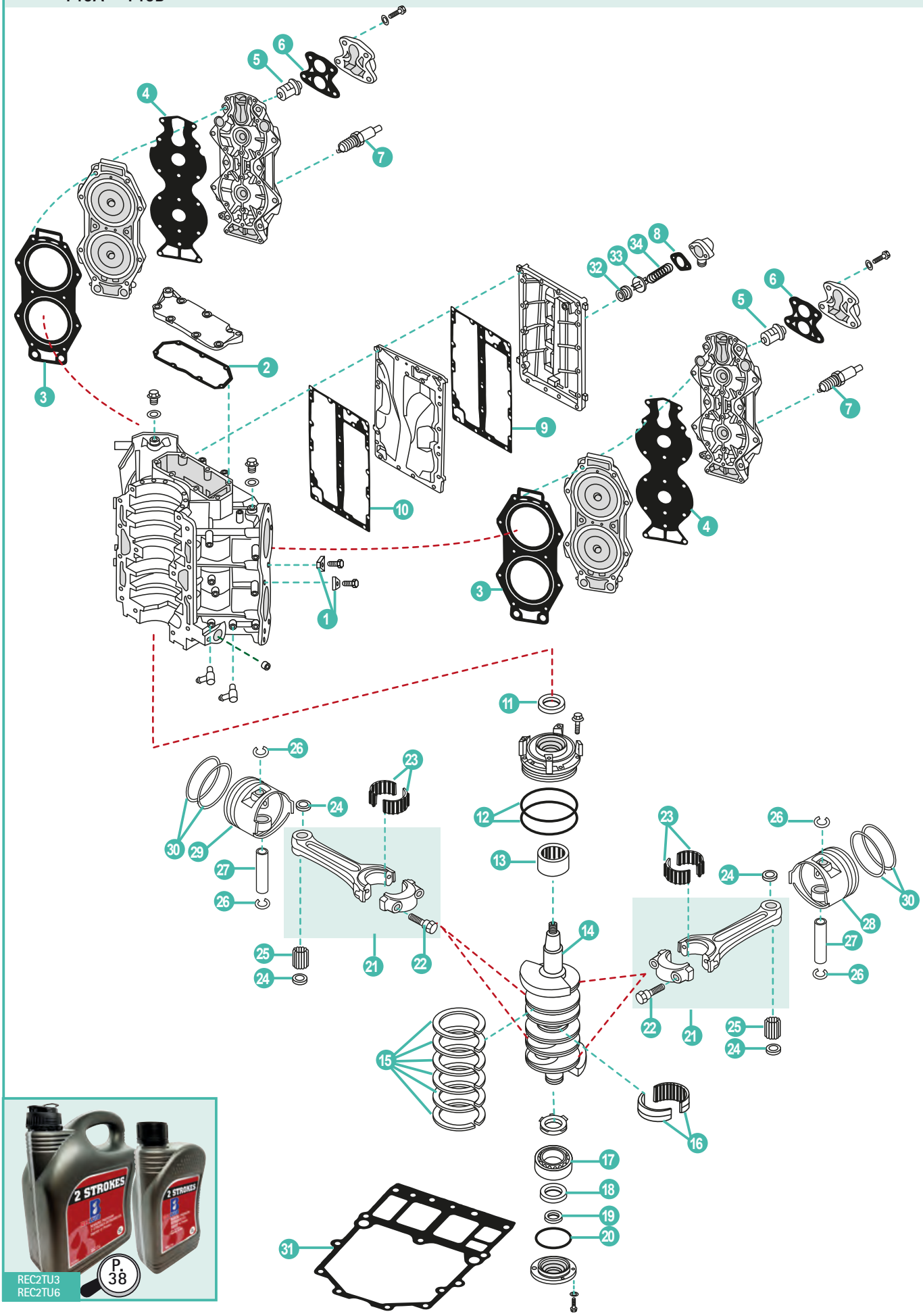

	REF	OEM					UN.
1	TEN01152	6E5-11325-00	ÁNODO	ANODE	ANODO	ANODE	4
2	REC6E5-11381-A1	6E5-11381-A2	JUNTA	GASKET	GUARNIZIONE	JOINT	1
3	REC6E5-11181-A0	6E5-11181-A2	JUNTA CULATA	GASKET, CYLINDER HEAD	GUARNIZIONE TESTATA	JOINT DE CULASSE	2
4	REC6E5-11193-A0	6E5-11193-A0	JUNTA CULATÍN	GASKET, HEAD COVER	GUARNIZIONE COPERCHIO TESTA	JOINT DE COUVRE CULASSE	2
5	REC6E5-12411-30	6E5-12411-30	TERMOSTATO	THERMOSTAT	TERMOSTATO	THERMOSTAT	2
6	REC688-12414-A1	688-12414-A1	JUNTA TAPA TERMOSTATO	GASKET, THERMOSTAT COVER	GUARNIZIONE COPERCHIO TERMOSTATO	JOINT COUVERCLE DE THERMOSTAT	2
7	NGKBR8HS-10	94702-00247	BUJÍA **100, 115**	SPARK PLUG **100, 115**	CANDELA **100, 115**	BOUGIE **100, 115**	4
	NGKBR9HS-10	94702-00309	BUJÍA **130**	SPARK PLUG **130**	CANDELA **130**	BOUGIE **130**	
8	REC6G5-11382-A1	6G5-11382-A1	JUNTA	GASKET	GUARNIZIONE	JOINT	1
9	REC6E5-41112-A1	6E5-41112-A1	JUNTA EXTERIOR, TAPA DE ESCAPE	GASKET, EXHAUST OUTER COVER	GUARNIZIONE ESTERIORE, COPERCHIO SCARICO	JOINT DE COUVERCLE EXT ECHAPPEMENT	1
10	REC6E5-41112-A1	6E5-41112-A1	JUNTA DE ESCAPE	EXHAUST GASKET	GUARNIZIONE DI SCARICO	JOINT D'ECHAPPEMENT	1
11	REC93102-40M14	93102-40M14	RETÉN DE ACEITE	OIL SEAL	PARAOLIO	JOINT SPI	1
12	REC93211-04001	93211-04001	TÓRICA	O-RING	O-RING	JOINT TORIQUE	2
13	REC93311-940U3	93311-940U3	RODAMIENTO	BALL BEARING	CUSCINETTO	ROULEMENT À BILLE	1
14	REC6N7-11411-00	6N7-11411-00	CIGÜEÑAL	CRANKSHAFT	ALBERO MOTORE	VILEBREQUIN	1
15	REC6E5-11447-00	6E5-11447-00	ARO	SEAL, CRANK	O-RING	JOINT TORIQUE	6
16	REC93310-954U1	93310-954U1	RODAMIENTO	BALL BEARING	CUSCINETTO	ROULEMENT À BILLE	1
17	REC93306-208U0	93306-208U0	RODAMIENTO	BALL BEARING	CUSCINETTO	ROULEMENT À BILLE	1
18	REC93102-35M13	93102-35M13	RETÉN DE ACEITE	OIL SEAL	PARAOLIO	JOINT SPI	1
19	REC93101-22M15	93101-22M15	RETÉN DE ACEITE	OIL SEAL	PARAOLIO	JOINT SPI	1
20	REC93210-74M35	93210-74M35	TÓRICA	O-RING	O-RING	JOINT TORIQUE	1
21	REC6R5-11650-10	6R5-116950-0	BIELA	CONNECTING ROD ASSY	BIELLA	BIELLE	4
22	REC90109-08M71	90109-08M71	TORNILLO	BOLT	VITE	VIS	8
23	REC93310-836V2	93310-836V2	COJINETE DE BIELA	BEARING, CONNECTING ROD	CUSCINETTO BIELLA	PALIER DE BIELLE	4
24	REC90201-23M01	90201-23M01	ARANDELA	WASHER	RONDELLA	RONDELLE	8
24	REC90201-21M75	90201-21M75	ARANDELA	WASHER	RONDELLA	RONDELLE	8
25	REC93310-32337	93310-323V6	AGUJA DE RODAMIENTO	BEARING NEEDLE	SPILLO DE CUSCINETTO	CLAVETTE DE PALIER	4
26	REC6R5-11634-00	6R5-11634-10	CIRCLIP	CIRCLIP	CIRCLIP	CIRCLIP	8
27	REC6R5-11633-00	6R5-11633-10	PIN, PISTÓN	PIN, PISTON	SPINOTTO PISTONE	AXE DE PISTON	4
28	REC6R5-11642-01K	6R5-11642-11-93	PISTÓN **STD 2**	PISTON **STD 2**	PISTONE **STD 2**	PISTON **STD 2**	2
29	REC6R5-11631-11K	6R5-11361-11-93	PISTÓN **STD 1**	PISTON **STD 1**	PISTONE **STD 1**	PISTON **STD 1**	2
30	REC64D-11603-01	64D-11603-01	KIT SEGMENTOS DE PISTÓN **STD**	PISTON RING SET **STD**	KIT FASCE **STD**	KIT SEGMENTS **STD**	4
	REC64D-11604-01	64D-11604-01	KIT SEGMENTOS DE PISTÓN **0.25mm** O/S	PISTON RING SET **0.25mm** O/S	KIT FASCE **0.25mm** O/S	KIT SEGMENTS **0.25mm** O/S	
	REC64D-11605-01	64D-11605-01	KIT SEGMENTOS DE PISTÓN **0.50mm** O/S	PISTON RING SET **0.50mm** O/S	KIT FASCE **0.50mm** O/S	KIT SEGMENTS **0.50mm** O/S	
31	REC6G5-45113-A1	6G5-45113-A1	JUNTA BASE MOTOR	GASKET ENGINE	GUARNIZIONE BASE MOTORE	JOINT DE TETE MOTRICE	1
32	REC90480-20M05	90480-20M05	JUNTA GOMA	GROMMET	GUARNIZIONE GOMMA	JOINT	1
33	REC60H-12416-00	60H-12416-00	VÁLVULA CONTROL DE PRESIÓN	VALVE, PRESSURE CONTROL	VALVOLA ANTIPRESSIONE	SOUPAPE DE DEPRESSION	1
34	REC90501-16M11	90501-16M11	MUELLE	SPRING COMPRESSION	MOLLA	RESSORT	1

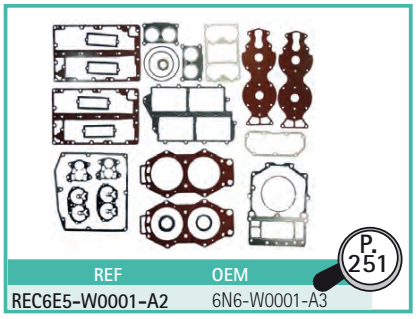

REF	OEM	
REC6E5-W0001-A2	6N6-W0001-A3	P. 251

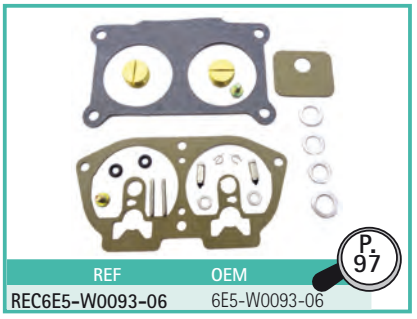

REF	OEM	
REC6E5-W0093-06	6E5-W0093-06	P. 97



REF	OEM	
REC6N6-W0093-02	6N6-W0093-02	P. 97

2T STROKES 150AET • 150F/FETO • 150L/SL150 • 150TR/150TXRA • D150H • 175D/DETO • S175 • L175 • 175D/DETO • S175 -L175 • 200AET • 200G/GETO • 200F/FETO • L200 • 200TLR • 225D/DET/DETO • L225A • L225B

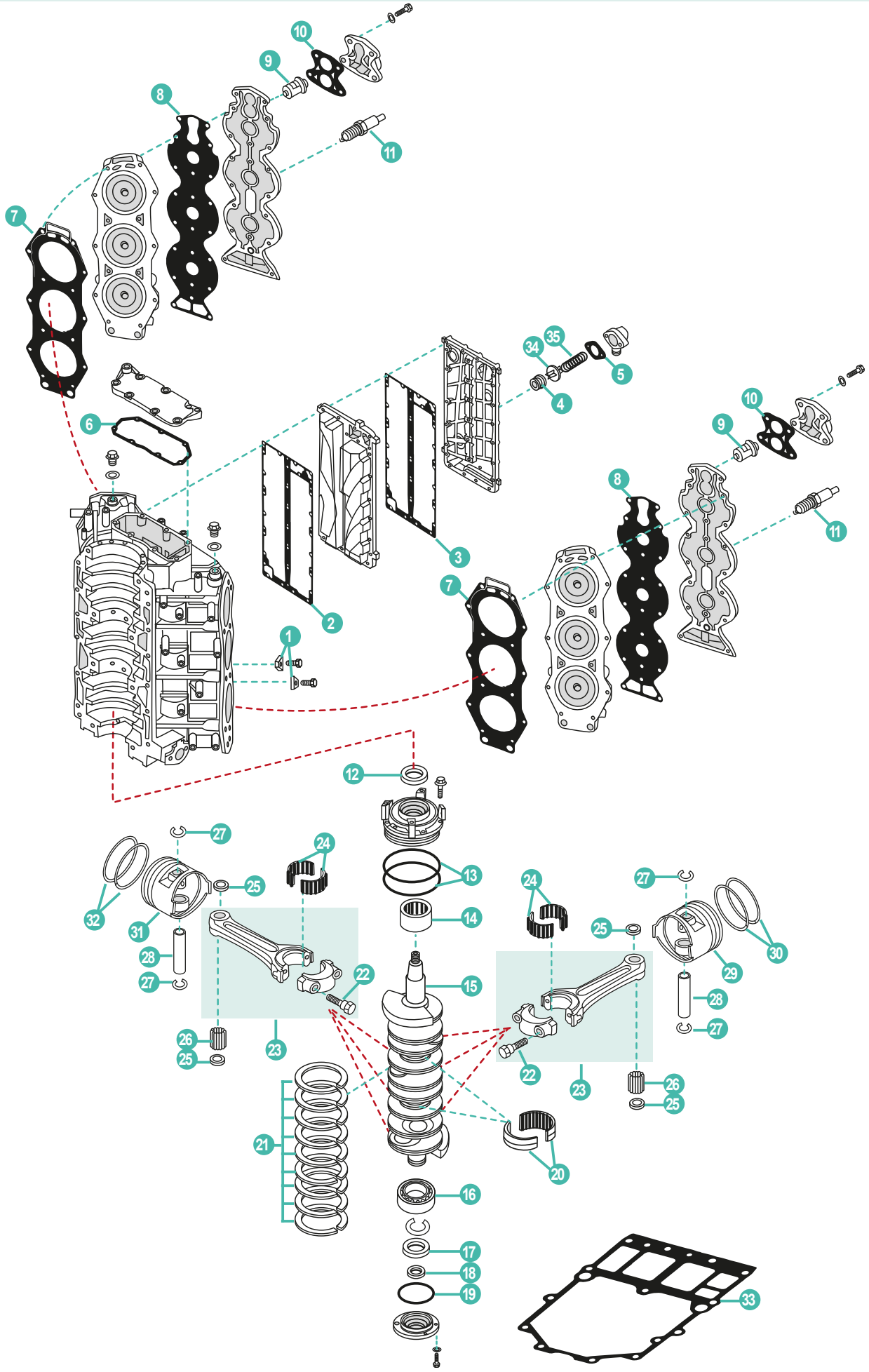

	REF	OEM					UN.
1	TEN01152	6E5-11325-00	ÁNODO	ANODE	ANODO	ANODE	8
2	REC6G5-41112-A1	6G5-41112-A1	JUNTA DE ESCAPE	EXHAUST GASKET	GUARNIZIONE DI SCARICO	JOINT D'ECHAPPEMENT	1
3	REC6G5-41114-A0	6G5-41114-A0	JUNTA EXTERIOR, TAPA DE ESCAPE	GASKET, EXHAUST OUTER COVER	GUARNIZIONE ESTERIORE, COPERCHIO SCARICO	JOINT DE COUVERCLE EXT ECHAPPEMENT	1
4	REC90480-20M05	90480-20M05	JUNTA DE GOMA	GROMMET	GUARNIZIONE GOMMA	JOINT	1
5	REC6G5-11382-A1	6G5-11382-A1	JUNTA	GASKET	GUARNIZIONE	JOINT	1
6	REC6E5-11381-A1	6E5-11381-A2	JUNTA	GASKET	GUARNIZIONE	JOINT	1
7	REC6G5-11181-A2	6G5-11181-A3	JUNTA CULATA	GASKET, CYLINDER HEAD	GUARNIZIONE TESTATA	JOINT DE CULASSE	2
8	REC6G5-11193-A0	6F5-11193-A0	JUNTA TAPA	GASKET, COVER	GUARNIZIONE COPERCHIO	JOINT DE COUVRE CULASSE	2
9	REC6E5-12411-30	6E5-12411-30	TERMOSTATO	THERMOSTAT	TERMOSTATO	THERMOSTAT	2
10	REC688-12414-A1	688-12414-A1	JUNTA TAPA TERMOSTATO	GASKET, THERMOSTAT COVER	GUARNIZIONE COPERCHIO TERMOSTATO	JOINT COUVERCLE DE THERMOSTAT	2
11	NGKBR8HS-10	94702-00271	BUJÍA	SPARK PLUG	CANDELA	BOUGIE	6
12	REC93102-40M14	93102-40M14	RETÉN DE ACEITE	OIL SEAL	PARAOLIO	JOINT SPI	1
13	REC93211-04001	93211-04001	TÓRICA	O-RING	O-RING	JOINT TORIQUE	2
14	REC93311-940U3	93311-940U3	RODAMIENTO	BEARING	CUSCINETTO	ROULEMENT À BILLE	1
	REC93311-940V0	93311-940V0	RODAMIENTO CIGÜEÑAL **(6D0)**	CRANKSAHFT BEARING **(6D0)**	CUSCINETTO ALBERO MOTORE **(6D0)**	ROULEMENT DE VILEBREQUIN **(6D0)**	
15	REC6G5-11411-02	6G5-11411-02	CIGÜEÑAL	CRANKSHAFT	ALBERO MOTORE	VILEBREQUIN	1
16	REC93306-208U0	93306-208U0	RODAMIENTO	BEARING	CUSCINETTO	ROULEMENT	1
17	REC93102-35M13	93102-35M13	RETÉN DE ACEITE	OIL SEAL	PARAOLIO	JOINT SPI	1
18	REC93101-22M15	93101-22M15	RETÉN DE ACEITE	OIL SEAL	PARAOLIO	JOINT SPI	1
19	REC93210-74M35	93210-74M35	TÓRICA	O-RING	O-RING	JOINT TORIQUE	1
20	REC93310-954U1	93310-954U1	RODAMIENTO	BEARING	CUSCINETTO	ROULEMENT À BILLE	1
	REC93310-959U0	93310-959U0	RODAMIENTO CIGÜEÑAL **(6D0)**	CRANKSAHFT BEARING **(6D0)**	CUSCINETTO ALBERO MOTORE **(6D0)**	ROULEMENT DE VILEBREQUIN **(6D0)**	
21	REC6E5-11447-00	6E5-11447-00	ARILLO	SEAL, CRANK	O-RING	JOINT	9
22	REC90109-08022	90109-08022	TORNILLO	BOLT	VITE	VIS	2
23	REC6R5-11650-10	6F5-11650-11	BIELA	CONNECTING ROD ASSY	BIELLA	BIELLE	6
24	REC93310-836V2	93310-836V2	COJINETE DE BIELA	BEARING, CONNECTING ROD	CUSCINETTO BIELLA	PALIER DE BIELLE	6
25	REC90201-23M01	90201-23M01	ARANDELA	WASHER PLATE	RONDELLA	RONDELLE	12
	REC90201-21M75	90201-21M75	ARANDELA **(61A)**	WASHER **(61A)**	RONDELLA **(61A)**	RONDELLE **(61A)**	
26	REC93310-32337	93310-32337	AGUJA DE RODAMIENTO	BEARING NEEDLE	SPILLO DE CUSCINETTO	CLAVETTE DE PALIER	6
	REC93310-32668	93310-32668	AGUJA DE RODAMIENTO **(250G)**	BEARING NEEDLE **(250G)**	SPILLO DE CUSCINETTO **(250G)**	CLAVETTE DE PALIER **(250G)**	
27	REC6R5-11634-00	6R5-11634-10	CIRCLIP	CIRCLIP	CIRCLIP	CIRCLIP	12
28	REC6R5-11633-00	6R5-11633-10	PIN, PISTÓN	PIN, PISTON	SPINOTTO PISTONE	AXE DE PISTON	6
29	REC64D-11642-00K	64D-11642-02-90	PISTON **STD 2**	PISTON **STD 2**	PISTONE **STD 2**	PISTON **STD 2**	3
30	REC64D-11603-01	64D-11603-02	KIT SEGMENTOS DE PISTÓN **STD**	PISTON RING SET **STD**	KIT FASCE **STD**	KIT SEGMENTS **STD**	3
	REC64D-11604-01	64D-11604-01	KIT SEGMENTOS DE PISTÓN **0.25mm** O/S	PISTON RING SET **0.25mm** O/S	KIT FASCE **0.25mm** O/S	KIT SEGMENTS **0.25mm** O/S	
	REC64D-11605-01	64D-11605-02	KIT SEGMENTOS DE PISTÓN **0.50mm** O/S	PISTON RING SET **0.50mm** O/S	KIT FASCE **0.50mm** O/S	KIT SEGMENTS **0.50mm** O/S	
31	REC64D-11631-00K	64D-11631-02-90	PISTON **STD 1**	PISTON **STD 1**	PISTONE **STD 1**	PISTON **STD 1**	3
32	REC64D-11603-01	64D-11603-02	KIT SEGMENTOS DE PISTÓN **STD**	PISTON RING SET **STD**	KIT FASCE **STD**	KIT SEGMENTS **STD**	3
	REC64D-11604-01	64D-11604-02	KIT SEGMENTOS DE PISTÓN **0.25mm** O/S	PISTON RING SET **0.25mm** O/S	KIT FASCE **0.25mm** O/S	KIT SEGMENTS **0.25mm** O/S	
	REC64D-11605-01	64D-11605-02	KIT SEGMENTOS DE PISTÓN **0.50mm** O/S	PISTON RING SET **0.50mm** O/S	KIT FASCE **0.50mm** O/S	KIT SEGMENTS **0.50mm** O/S	
33	REC6G5-45113-A1	6G5-45113-A1	JUNTA BASE MOTOR	GASKET ENGINE	GUARNIZIONE BASE MOTORE	JOINT DE TETE MOTRICE	1
34	REC60H-12416-00	60H-12416-00	VÁLVULA CONTROL DE PRESIÓN	VALVE, PRESSURE CONTROL	VALVOLA ANTIPRESSIONE	SOUPAPE DE DEPRESSION	1
35	REC90501-16M11	90501-16M11	MUELLE	SPRING COMPRESSION	MOLLA	RESSORT	1



REC2TU3
REC2TU6

P. 38

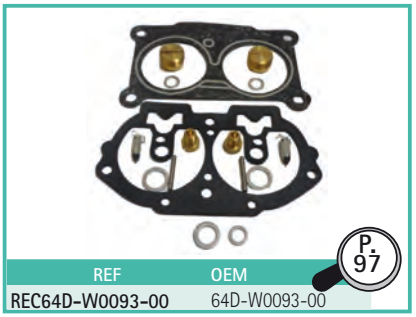

REF	OEM
REC64D-W0093-00	64D-W0093-00

P. 97

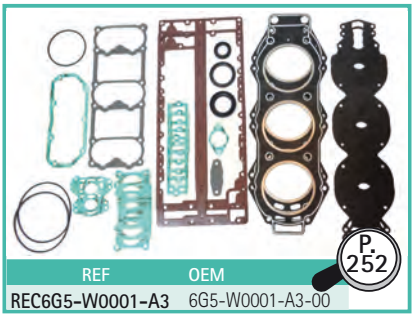

REF	OEM
REC6G5-W0001-A3	6G5-W0001-A3-00

P. 252

JUNTAS DE MOTOR 2 TIEMPOS — ENGINE GASKET 2 STROKES — GUARNIZIONI MOTORE 2 TEMPI — JOINTS DE MOTEUR 2 TEMPS

2T STROKES

JUNTAS DE CULATA — CYLINDER HEAD GASKET — GUARNIZIONE DE TESTATA — JOINT DE CULASSE

REF	OEM
REC6F8-11181-A0	6F8-11181-A1

2CMH (2003+)

P. 220



REF	OEM
REC677-11181-A0	677-11181-A1

E8D/DMH (1997-03)

P. 225



REF	OEM
REC63V-11181-A1	63V-11181-A1

9.9F/MH/MSH
E9.9D
15F/FMH/MSH
E15D
13.5 AWH/AMH (1995+)

P. 227



REF	OEM
REC6E7-11181-00	6E7-11181-A2

9.9D
15D (1988-96)



REF	OEM
REC6L2-11181-A1	6L2-11181-A3

20D/M
25D/M/N (1988+)



REF	OEM
REC695-11181-00	695-11181-A1

20C
25D (1986-02)



REF	OEM
REC6H3-11181-A0	6H3-11181-A2

25B
50G
60T
E60
60FE
70B/ET/CE (1984+)

P. 241



REF	OEM
REC6H4-11181-00	6H4-11181-A2

25Q
40N/H
50E/D (1984-94)



REF	OEM
REC61N-11181-00	61N-11181-A2

25VE/VM
E25A/BMH
30G
E30HMH/H (1996-12)



REF	OEM
REC689-11181-00	689-11181-A2

30A (1990-92)



REF	OEM
REC6J8-11181-A2	6J8-11181-A2

30D
25J (1986+)

P. 231



REF	OEM
REC6F5-11181-A2	6F5-11181-A2

40GWH/JWH
E40GMH/JMH (2003)

P. 235



REF	OEM
REC63D-11181-A1	63D-11181-A2

40V
C40/EL/TLR/Y
50H/TLR/TR
(1995+)

P. 237



REF	OEM
REC6R7-11181-A0	6R7-11181-A1

40G (1993)



REF	OEM
REC676-11181-01	676-11181-A2

40QE/QM/QWC (1990-98)



REF	OEM
REC6G5-11181-A2	6G5-11181-A3

P. 247

150A/E/C/AET
175AET/B/D
200AET/B/C/FETGE
225AET/BETO/D



REF	OEM
REC66T-11181-00	66T-11181-A0

P. 233

40X
E40X/M (1998-09)



REF	OEM
REC60V-11181-00	60V-11181-00

Z250
VZ250
LZ250 (2003-07)



REF	OEM
REC697-11181-A1	697-11181-A2

P. 239

E55CMH
E48CMH
55BET
55B/BE/BM (1990-05)



REF	OEM
REC68F-11181-00	68F-11181-00

Z/VZ/LZ200 (2001-07)
Z/VZ/LZ150 (2000-07)
Z/VZ175 (2001-07)



REF	OEM
REC688-11181-A1	688-11181-A2

P. 243

75A/AE/CET
80A/AE
85A/AE
90A/AE/TR (1986-14)



REF	OEM
REC6D0-11181-00	6D0-11181-00

VZ/LZ/Z300 (2004-07)



REF	OEM
REC6E5-11181-A0	6E5-11181-A2

P. 245

100A
115A/E/B/C
C115T 130B
140A (1984+)



new

REF	OEM
REC61A-11181-A0	69L-11181-00

225G/F (1194-03)
250A/B/F (1992-06)

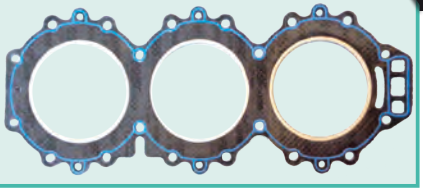

2T STROKES

KITS
JUNTAS DE CULATA

CYLINDER HEAD GASKET KIT

KIT
GUARNIZIONE TESTATA

KITS
JOINT DE CULASSE

REF	OEM
REC63V-W0001-00	63V-W0001-01

9.9-15F/FMH/FEMH/MSH (1995-00)
13.5AWH (1998)

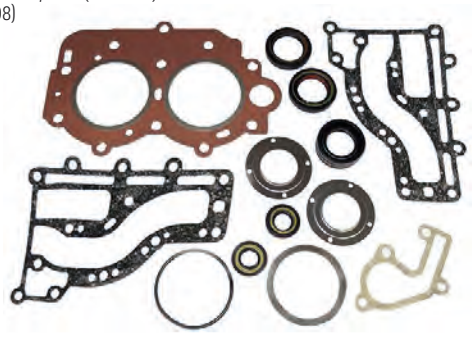

new

REF	OEM
REC6E7-W0001-A1	6E7-W0001-00 6E7-W0001-A1

9.9D
15D

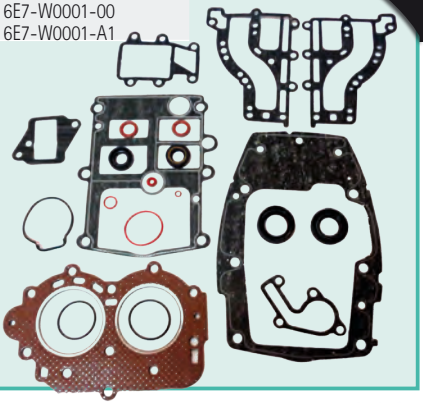

REF	OEM
REC61T-W0001-02	61T-W0001-02

E25A, 25VM, 30G/GE/A

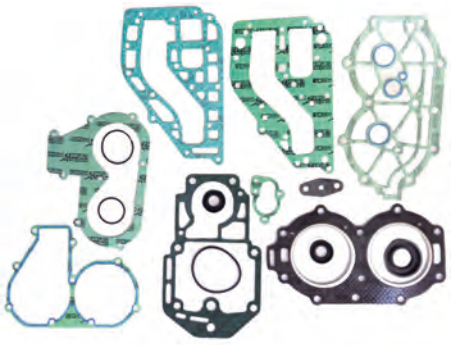

REF	OEM
REC695-W0001-A2	695-W0001-01

25D/DE (1985-92)
20CM/C (1985-92)

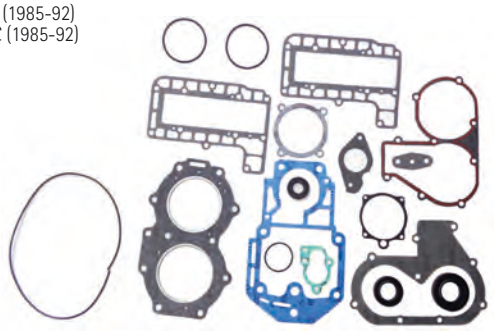

REF	OEM
REC6H3-W0001-02	6H3-W0001-02

25B/BETO (1994-95)
50G/GEO/GETOL (1994-98)
60FEO/FETO/FEDO/TLR/FEHTO/TR (1994-2007)

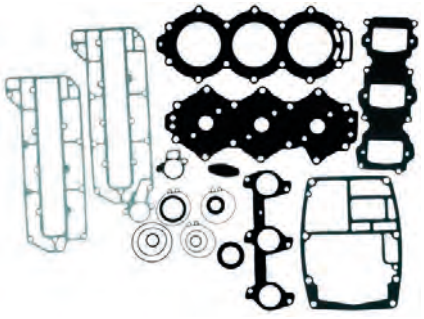

REF	OEM
REC6R6-W0001-02-00	6R6-W0001-02

40QE-2 (1995-97)
40QM (1996)
40QWC (1998)

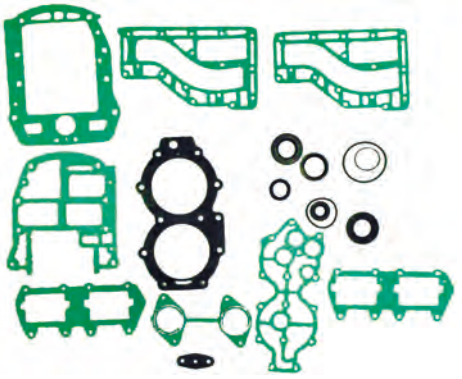

REF	OEM
REC6H4-W0001-04	6H4-W0001-04

25QEO (1992-94)
40HE (1992-94)
50DE/DEMTO (1992-94)

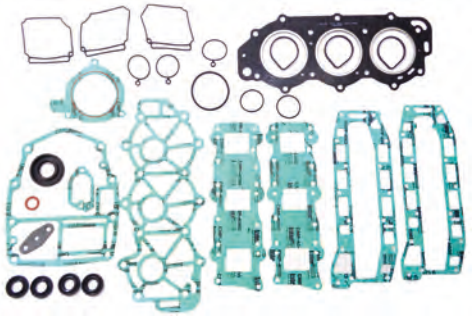

REF	OEM
REC66T-W0001-01	66T-W0001-01

E40X/XMH/XW/
MLHZ (2001-13)

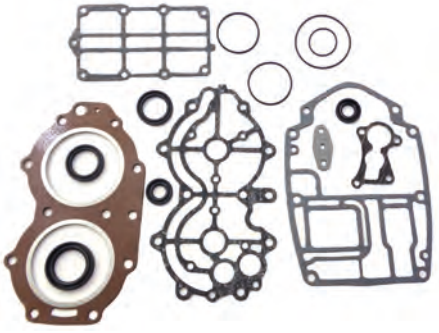

REF	OEM
REC6L2-W0001-03	6L2-W0001-A2

25NE (1988-93)
20DM (1988-93)
25NEMO (1991-92)
20D/DEO (1989-92)

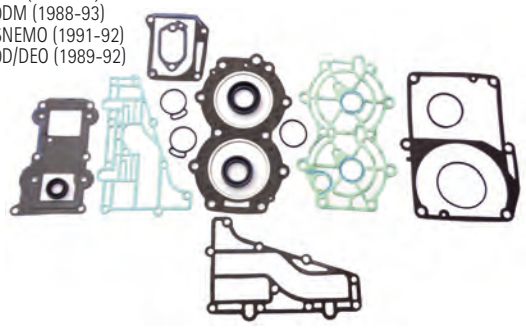

REF	OEM
REC6H4-W0001-A1	6H4-W0001-01

40N (1984)
40H (1985-98)
50D (1985-98)
50ETN (1984)

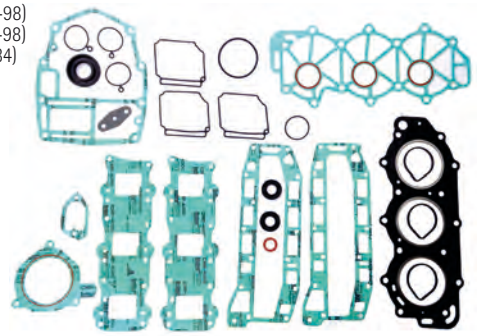

new

REF	OEM
REC6F6-W0001-02	6F6-W0001-02

E40GMH/S/L
E40JMH
E40JWH
40GWH
40JWH

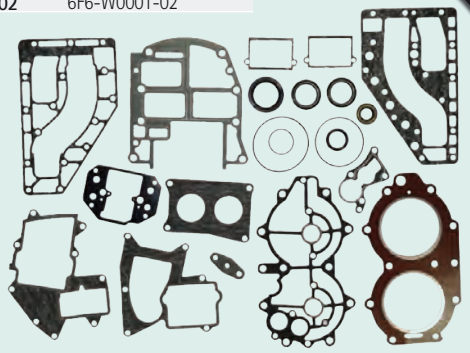

REF	OEM
REC688-W0001-A0	688-W0001-A0

75A/AE (1990-91)
85A/AE (1990-91)

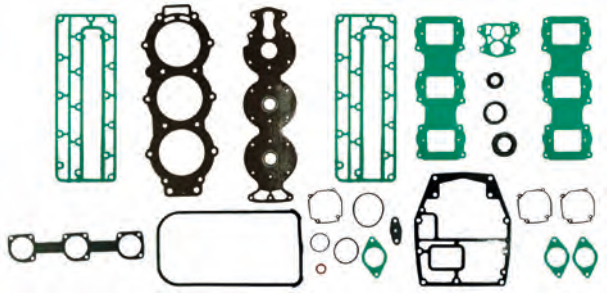

REF	OEM
REC63D-W0001-00	63D-W0001-00

50H/HRDO/HMDH/HETO (1995-03)
40V/VMH/VETO/MLH/MHO/VE/VEO (1995-13)
40VEMHD/TLRZ/YETO (1997-07)
C40T/TLR (1995-02)

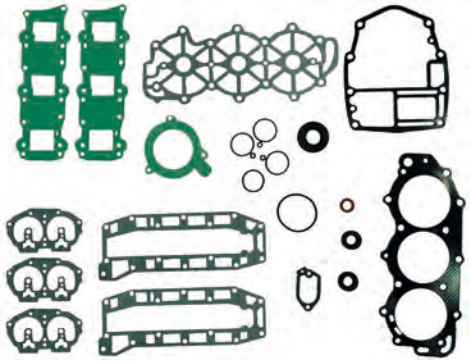

REF	OEM
REC6H1-W0001-00-00	6H1-W0001-A1

80A/AE (1984-91)
80AEO (1992-93)
90A/AEO/AETO/ETN (1984-91)
90AEO (1992)

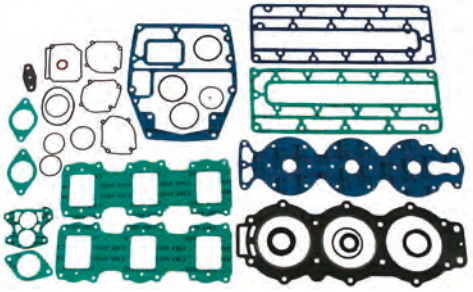

REF	OEM
REC697-W0001-02	697-W0001-A0

55BET (1990)

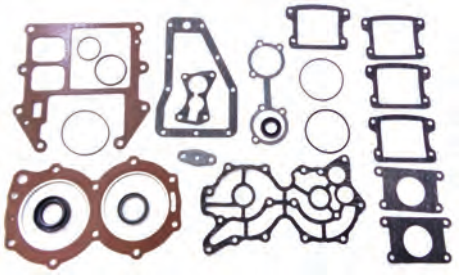

REF	OEM
REC6E5-W0001-A2	6E5-W0001-A2

L130BETO (1991-99)
115CEO/CETO (1991-96)
100A/AETO/TLR (1996-00)

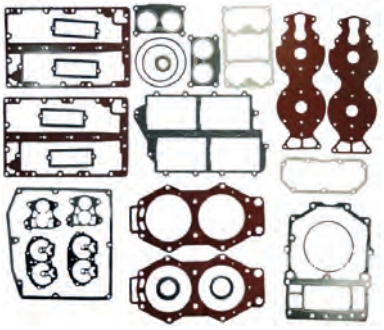

REF	OEM
REC6K5-W0001-02	6K5-W0001-02

E60H/MHZ/HE/HM (1996-02)

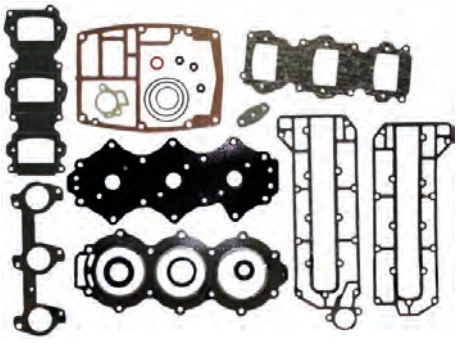

REF	OEM
REC6F3-W0001-04-00	6F3-W0001-A4

115BETO (1991-93)
115B (1988-00)
115ETN (1984)
115A (1987)
140AETO/BETO (1984-89)
115BE (1992)

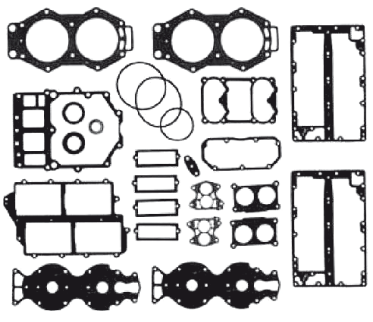

REF	OEM
REC6R3-W0001-03	6R3-W0001-A3

L/150 CETO (1990-95)
L/200 BETO (1993-95)
175BETO/ET (1990-95)
L200ETD (1990)
150CED/ETD (1990)
200ET (1990)

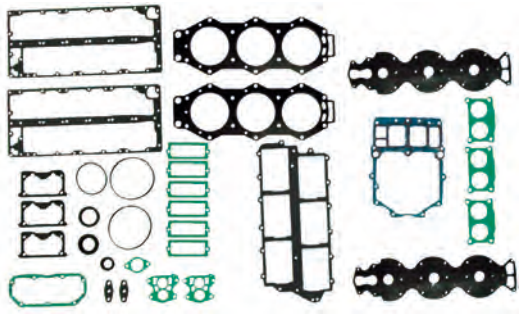

REF	OEM
REC68F-W0001-01	68F-W0001-01

LZ200 (2004-10)
VZ200 (2004)
Z200 (2004-10)
Z
VZ200TLRC/PETO/TLR2D/PETOL/TXRC/
NETO-L/TR/NETOX/Z175GETO/GETOX/TR/TXR (2004-07)

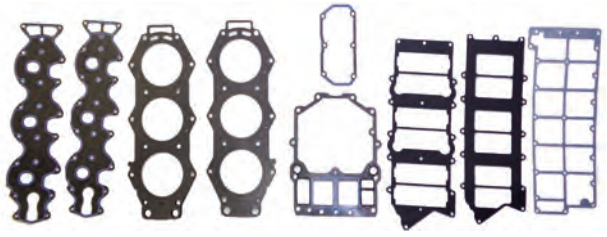

REF	OEM
REC6G5-W0001-A3	6G5-W0001-03

200CETO (1992-93)
PROV200 (1991-94)
225BET/BETO (1991-95)
150A/AETO/AETL/AETX (1998-02)

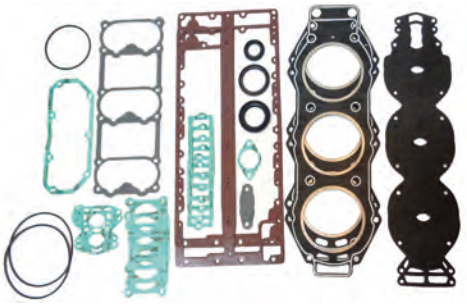

REF	OEM
REC61A-W0001-01	61A-W0001-A1

250ETD (1990)
250AETO/AET/B (1990-96)
L250A/AET/AETO (1992-96)
225C (1994-95)
L225CETO (1994)

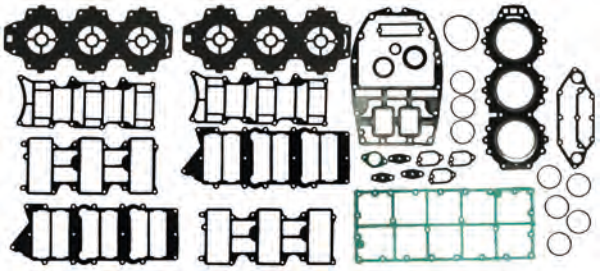

REF	OEM
REC6D0-W0001-00	6D0-W0001-00

Z300AETO/TR
LZ300AETO/TR (2004-07)

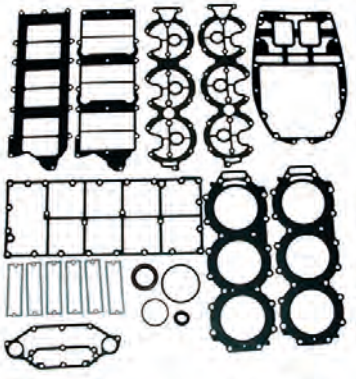

2T STROKES

JUNTAS BASE DE MOTOR — CYLINDER GASKET — GUARNIZIONE BASE MOTORE — JOINTS DE TETE MOTRICE

REF	OEM
REC6E0-45113-A1	6E0-45113-A1

4A/AC/AS/MSH
5C/CS/CMH

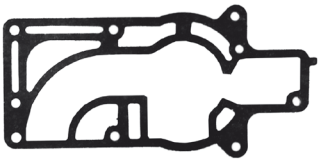

REF	OEM
REC677-45113-A0	677-45113-A0

E8D/DMH

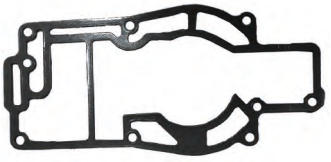

REF	OEM
REC6G1-45113-A1	6G1-45113-A1

8N/C/J/T/M
6C/J/D/T/M

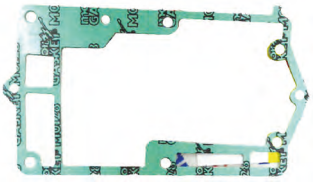

new

REF	OEM
REC6B4-11351-A1	6B4-11351-A1

9.9/15 HP D 6B3-6B4
(2003)

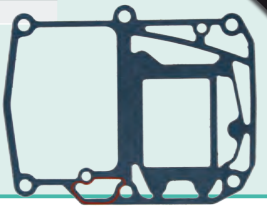

REF	OEM
REC63V-45113-A1	63V-45113-A1

9.9FEM/F/MSH/FMH/MH
13.5 AW/AMH
15F/FEM/MSH/FMH/MH

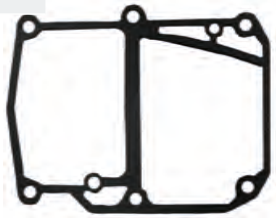

REF	OEM
REC66T-45113-A0	66T-45113-A0

40X/E40X

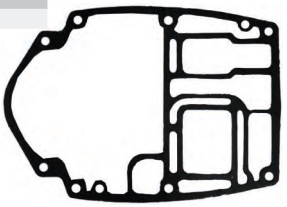

REF	OEM
REC682-11351-A0	682-11351-A0

9.9D
15D

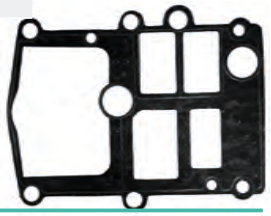

REF	OEM
REC696-45113-00	696-45113-A0

55B/E55
E48

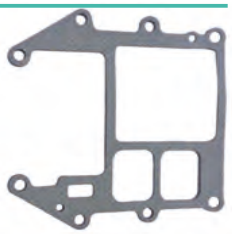

REF	OEM
REC6L2-45113-A2	6L2-45113-A1

20D
25D/N/M

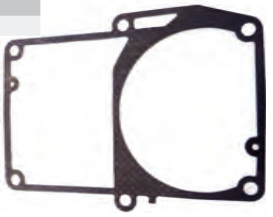

REF	OEM
REC6H3-45113-00	6H3-45113-A0

60FE/TLR/F,
50G/GE
E60H
70B/BE/CE/TR

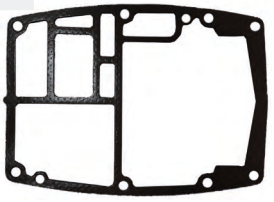

REF	OEM
REC61T-45113-A0	61T-45113-A0

25VE/BMH
30G/HW

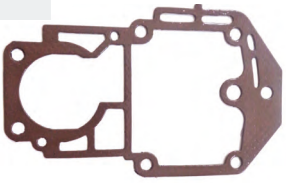

REF	OEM
REC688-45113-A0	688-45113-A0

75A/AE/CE/TL
85A/AE
80A/AE
90A/AE/ETN

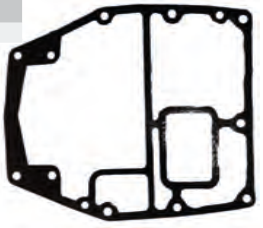

REF	OEM
REC6J8-45113-00	6J8-45113-A0

25J
30D/DMH/DE/E/M

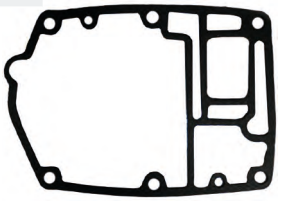

REF	OEM
REC6G5-45113-A1	6G5-45113-A2

115ETN/A/B
130BE
150ETN/AET/CET/F/TXR/G
140AET/BET
175AET/BET/DE
150BET
200ETN/AET/CET/BET/AF/G
220AET
225AET/BET/D

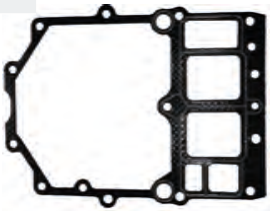

REF	OEM
REC6H4-45113-00	6H4-45113-A0

25Q
40N/H/E/V/T/Y
50D/H/T

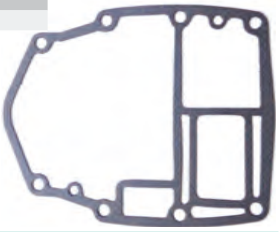

REF	OEM
REC6E5-45113-A2	6E5-45113-A0

115B/ET
140AE/BE

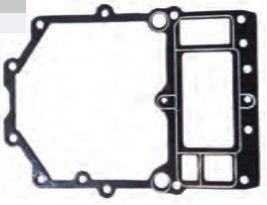

REF	OEM
REC6F5-45113-A0	6F5-45113-A0

E40G/E40J/40G/40J/40Q

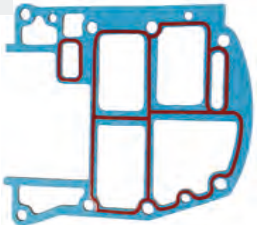

REF	OEM
REC68F-45113-01	68F-45113-01

Z/VZ150
Z/ VZ175
VZ-Z200/200A/F/J
150F/A
Z200

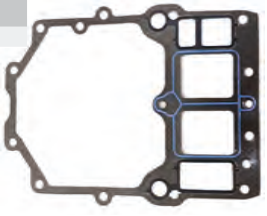

REF	OEM
REC60V-45113-02	60V-45113-02

LZ/Z/VZ
250D/T/F
300A/B/T (2004-07)



REF	OEM
REC61A-45113-A0	61A-45113-A0

Z/VZ250
Z300

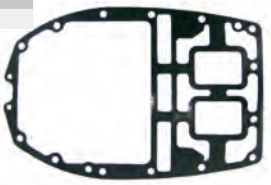

2T STROKES

GUÍA JUNTAS DE MOTOR — ENGINE GASKET GUIDE — GUIDA GUARNIZIONE MOTORE — GUIDE JOINTS DE MOTEURS

		CYL	JUNTA CULATA CYLINDER HEAD GASKET GUARNIZIONE TESTATA JOINT DE CULASSE	KIT JOINTS	JUNTA BASE MOTOR CYLINDER GASKET GUARNIZIONE BASE MOTORE JOINT DE TETE MOTRICE
2CMH	2010	1	REC6F8-11181-A0		REC646-14623-A1
E8D/DMH	1997-03	2	REC677-11181-A0		REC677-45113-A0
9.9D	1988-96	2	REC6E7-11181-00	REC6E7-W0001-A1	REC682-45113-A0
9.9F/FM/MSH/E9.9D	1995	2	REC63V-11181-A1	REC63V-W0001-00	REC63V-45113-A1
13.5AWH/AMH	1995	2	REC63V-11181-A1	REC63V-W0001-00	REC63V-45113-A1
15D	1988-95	2	REC6E7-11181-00	REC6E7-W0001-A1	REC682-45113-A0
15F/FMH/MSH/E15D	1995	2	REC63V-11181-A1	REC63V-W0001-00	REC63V-45113-A1
20C	1986-02	2	REC695-11181-00	REC695-W0001-A2	REC61T-45113-A0
20D/20DM	1988	2	REC6L2-11181-A1	REC6L2-W0001-03	REC6L2-45113-A2
25DE/M/N	1998	2	REC6L2-11181-A1	REC6L2-W0001-03	REC6L2-45113-A2
25DE/M/N	1986-02	2	REC695-11181-00	REC695-W0001-A2	REC61T-45113-A0
25VE/VM/BMH/E25A	1996-12	2	REC61N-11181-00	REC61T-W0001-02	REC61T-45113-A0
25Q/QEO	1990-94	3	REC6H4-11181-00	REC6H4-W0001-A1	REC6H4-45113-00
25J/JEO/JETO	1987 -99	3	REC6J8-11181-A2		REC6J8-45113-00
25B/BETO	1994-95	3	REC6H3-11181-A0	REC6H3-W0001-02	REC6H3-45113-00
25B/BMH	1996-10	2	REC61N-11181-00	REC61T-W0001-02	REC61T-45113-A0
30A	1990-92	2	REC689-11181-00	REC61T-W0001-02	REC61T-45113-A0
30G/E30HMH/H	1996-12	2	REC61N-11181-00		REC61T-45113-A0
30D	1986	3	REC6J8-11181-A2		REC6J8-45113-00
40QE/QM/QWC	1990-98	2	REC676-11181-01	REC6R6-W0001-02-00	REC6F5-45113-A0
40N/H	1984-94	3	REC6H4-11181-00	REC6H4-W0001-A1	REC6H4-45113-00
40G	1993	2	REC6R7-11181-A0	REC6R6-W0001-02-00	REC6F5-45113-A0
40X/E40/M/X	1998	2	REC66T-11181-00	REC66T-W0001-01	REC66T-45113-A0
40/E40GMH/JMH	2003	2	REC6F5-11181-A2		REC6F5-45113-A0
40V/C40/EL/TLR/Y-YE	1995	3	REC63D-11181-A1	REC63D-W0001-00	REC6H4-45113-00
E48	2003	2	REC697-11181-A1	REC697-W0001-02	REC696-45113-00
50H/TLR/TR	1995	3	REC63D-11181-A1	REC63D-W0001-00	REC6H4-45113-00
50G/GEO/GETO	1993-02	3	REC6H3-11181-A0	REC6H3-W0001-02	REC6H3-45113-00
50E/D	1984-94	3	REC6H4-11181-00	REC6H4-W0001-A1	REC6H4-45113-00
55B/E55	1990-05	2	REC697-11181-A1	REC697-W0001-02	REC697-45114-00
60FE/T/E60	1984	3	REC6H3-11181-A0	REC6H3-W0001-02	REC6H3-45113-00
70B/ET/CE	1984	3	REC6H3-11181-A0	REC6H3-W0001-02	REC6H3-45113-00
70A/AE/CET	1986	3	REC688-11181-A1	REC688-W0001-A0	REC688-45113-A0
80A/AE	1986	3	REC688-11181-A1	REC688-W0001-A0	REC688-45113-A0
85A/AE	1986	3	REC688-11181-A1	REC688-W0001-A0	REC688-45113-A0
90A/AE/TR	1986	3	REC688-11181-A1	REC688-W0001-A0	REC688-45113-A0
100A	1984	4	REC6E5-11181-A0	REC6E5-W0001-A2	REC6E5-45113-A2
115A/B/E/C/C115T	1984	4	REC6E5-11181-A0	REC6E5-W0001-A2	REC6E5-45113-A2
130B	1984	4	REC6E5-11181-A0	REC6E5-W0001-A2	REC6E5-45113-A2
140A	1984	4	REC6E5-11181-A0	REC6E5-W0001-A2	REC6E5-45113-A2
LZ150/VZ150/Z150	2004-05	6	REC68F-11181-00	REC68F-W0001-01	REC68F-45113-01
150A/E/C/FET	1984-10	6	REC6G5-11181-A2	REC6G5-W0001-A3	REC6G5-45113-A1
VZ175/Z175	2004-10	6	REC68F-11181-00	REC68F-W0001-01	REC68F-45113-01
175D/B/AET	1984-10	6	REC6G5-11181-A2	REC6G5-W0001-A3	REC6G5-45113-A1
LZ200/VZ200/Z200	2004-10	6	REC68F-11181-00	REC68F-W0001-01	REC68F-45113-01
200B/C/AET/GE/FET	1984	6	REC6G5-11181-A2	REC6G5-W0001-A3	REC6G5-45113-A1
225D/BET/AET	1984	6	REC6G5-11181-A2	REC6G5-W0001-A3	REC6G5-45113-A1
225C/G	1990	6	REC61A-11181-A0	REC61A-W0001-01	REC61A-45113-A0
250A/E/B	1990-06	6	REC61A-11181-A0	REC61A-W0001-01	REC61A-45113-A0
Z-LZ250DET/TUR/TR	2003-07	6	REC60V-11181-00		REC60V-45113-02
250TR/FET/HETO	2003-07	6	REC60V-11181-00		REC60V-45113-02
V250TLR/TR	2003	6	REC60V-11181-00		REC60V-45113-02
Z-LZ300	2004-07	6	REC6D0-11181-00	REC6D0-W0001-00	REC60V-45113-02

JUNTAS DE CULATÍN — GASKET, HEAD COVER — GUARNIZIONI COPERCHIO TESTATA — JOINT DE COUVRE CULASSE

REF	OEM
REC6L2-11193-A1	6L2-11193-A1

20D/DM/DEO
25NE/NEMO/NWC/
MSH



REF	OEM
REC6H3-11193-A1	6H3-11193-A1

25B/BETO
50G/GEO/GETO
60FEO/FETO/FEDO/TLR
E60H/
HMH/MLH
70B//BEO/BEMO/BETO/TR



REF	OEM
REC61T-11193-A0	61T-11193-A1

25VE/VM/BMH/B
E25A/BMH
30G/GE/HMH/HW
MSH

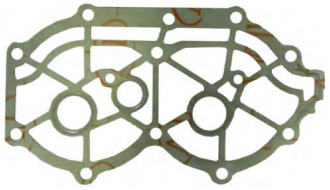

REF	OEM
REC66T-11193-A0	66T-11193-A0

40X/E40X
E40 MLH/X/XW

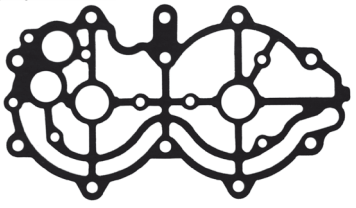

REF	OEM
REC6E9-11193-A0	6E9-11193-A0

40QE/QE-Z/QM/QWC

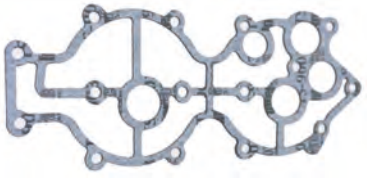

REF	OEM
REC6F6-11193-A1	6F6-11193-A1

40GWH/JWH
E40GMH/JMH

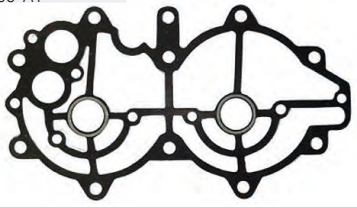

REF	OEM
REC663-11193-00	663-11193-A0

E48CMH
55BET/B/BE/BM/BET
E55CMH

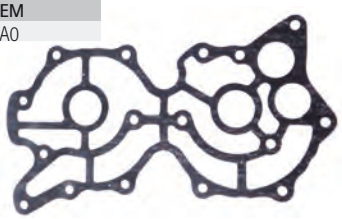

new

REF	OEM
REC63D-11193-A0	63D-11193-A0

50H/T (1995+)
40V/M/Y (1995+)

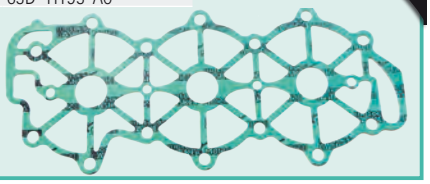

REF	OEM
REC688-11193-A1	688-11193-A1

75CETO/TLR/AE
E75B
80AEO/AETO/A
85A/AE
90AEO/TLR/A/AETO



REF	OEM
REC6E5-11193-A0	6E5-11193-A0

100A/AETO/TLR
115B/BETO/BE
C115TLR/CEO/CETO/TXR
E115AEL
130BETO



REF	OEM
REC68F-11193-02	68F-11193-02

Z150P/TXR/PETO/TR/Q/QETO
Z175G/GETO/TR/TXR/H
Z200N/TXR/PETO/TLR/NETO



REF	OEM
REC6G5-11193-A0	6G5-11193-A1

150A/AET/CETO/F/FETO/TXR
D150H
175D/DETO/BETO
200AET/CETO/FETO/G/GETO/BETO/TXR/F/TLR,
225D/DET/BET



REF	OEM
REC61A-11193-A2	61A-11193-A2

225C/CETO/G/GETO
250AET/B/TXR



new

REF	OEM
REC6H4-11193-A1	6H4-11193-00

25Q (1990-94)
40N/H (1984-91)
50E/D (1984-94)

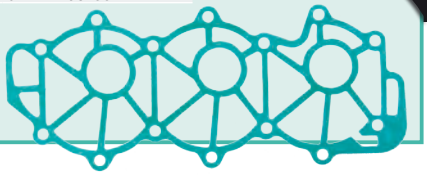

2T STROKES GUÍA CIGÜEÑAL COMPLETO / GUIDE CRANKSHAFT ASSY / GUIDA ALBERO MOTORE COMPLETO / GUIDE VILEBREQUIN COMPLET

2T STROKES		REF
E48CMHS	2003	REC663-11411-00
E55CMH/L/S	2003-05	REC663-11411-00
55B	1993-02	REC663-11411-00
55B E	1990-92	REC663-11411-00
55B EHD	2000	REC663-11411-00
55B ET	1990-98	REC663-11411-00
55B ETL	2001-02	REC663-11411-00
80A/90AETO	1988	REC688-11411-00
100A	1996-01	REC6N7-11411-00
100A A ETO	2000	REC6N7-11411-00
100A ETOL	2001	REC6N7-11411-00
115A	1984-87	REC6E5-11411-00
115B	1985-01	REC6E5-11411-00
115B ETO	1997-00	REC6N7-11411-00
115B ETOL	2001-02	REC6N7-11411-00
115CEO	1990-98	REC6N7-11411-00
115C ETO	1995-01	REC6N7-11411-00
115CETOL/CETOX	2001	REC6N7-11411-00
130BETO	1990-01	REC6N7-11411-00
130BETOL/BETOX	2001	REC6N7-11411-00
L130B	1991-98	REC6N7-11411-00
L130B ETO	2000	REC6N7-11411-00
L130B ETOX	2001	REC6N7-11411-00

2T STROKES		REF
140A	1984-87	REC6E5-11411-00
140B	1988-89	REC6E5-11411-00
L140B	1989	REC6E5-11411-00
150A	1984-89	REC6G5-11411-02
150A ET	1998-00	REC6G5-11411-02
150A ETL/ETX	2001	REC6G5-11411-02
150D ETOL	2001-03	REC6G5-11411-02
150F	1997-98	REC6G5-11411-02
150F ETO	2000	REC6G5-11411-02
150FETOL-X	2002-07	REC6G5-11411-02
150F ETOL	2001-06	REC6G5-11411-02
150F ETOX	2001-06	REC6G5-11411-02
D150H	1999	REC6G5-11411-02
DX150TLRA	2002	REC67H-11411-00
L150A	1988-89	REC6G5-11411-02
L150CETO	1990-95	REC6R3-11411-00
L150F	1997-98	REC6G5-11411-02
L150F ETO	2000	REC6G5-11411-02
L150 FETOL/FETOX	2001	REC6G5-11411-02
SX150TXRA	2002	REC67H-11411-00
175A	1984-89	REC6G5-11411-02
175BETO/ET	1990-95	REC6R3-11411-00
175D	1997-98	REC6G5-11411-02

2T STROKES		REF
175D ETO	2000	REC6G5-11411-02
175D ETOX	2001-02	REC6G5-11411-02
200A	1984-89	REC6G5-11411-02
200AET-L-X	2003	REC6G5-11411-02
200BETO/ETD	1990-95	REC6R3-11411-00
200CETO	1992-93	REC6R3-11411-00
200F	1997-98	REC6G5-11411-02
200F ETO	2000	REC6G5-11411-02
200F ETOL	2001	REC6G5-11411-02
200FETOL-X	2002-10	REC6G5-11411-02
200F ETOX	2001	REC6G5-11411-02
200G	1999	REC6G5-11411-02
200G ETO	2000	REC6G5-11411-02
200G ETOL	2001	REC6G5-11411-02
L200A	1988-91	REC6G5-11411-02
L200BETO/ET	1990-95	REC6R3-11411-00
L200F	1997-98	REC6G5-11411-02
L200F ETO	2000	REC6G5-11411-02
PROV200	1991-95	REC6R3-11411-00
220AET	1984-96	REC6G5-11411-02
225AETO	1987-89	REC6G5-11411-02
225D-DET	1997-01	REC6G5-11411-02

2T STROKES GUÍA PARTES DE CIGÜEÑAL / GUIDE CRANKSHAFT PARTS / GUIDA PARTE ALBERO MOTORE / GUIDE PARTS DE VILEBREQUIN

		1	2	3	4
6B/8B	1980-81	REC677-11412-02	REC677-11422-02	REC677-11432-02	REC677-11442-02
E8D	1996-99	REC677-11412-02	REC677-11422-02	REC677-11432-02	REC677-11442-02
E8D MH	1998-99	REC677-11412-02	REC677-11422-02	REC677-11432-02	REC677-11442-02
9.9D	1985-97	REC682-11412-00	REC682-11422-00	REC682-11432-00	REC682-11442-00
9.9D	1988-95	REC63V-11412-00	REC6K4-11422-00	REC6K4-11432-00	REC682-11442-00
9.9F/MH	1995-14	REC63V-11412-00	REC63V-11422-00	REC63V-11432-00	REC63V-11442-00
9.9F WH	2000	REC63V-11412-00	REC63V-11422-00	REC63V-11432-00	REC63V-11442-00
9.9F WHL/S	2001	REC63V-11412-00	REC63V-11422-00	REC63V-11432-00	REC63V-11442-00
13.5A	1999-06	REC63V-11412-00	REC63V-11422-00	REC63V-11432-00	REC63V-11442-00
15D	1985-87	REC682-11412-00	REC682-11422-00	REC63V-11432-00	REC682-11442-00
15D	1988-95	REC682-11412-00	REC6K4-11422-00	REC6K4-11432-00	REC682-11442-00
15F/MH	1995-14	REC63V-11412-00	REC63V-11412-00	REC63V-11432-00	REC63V-11442-00
E15D	2003	REC63V-11412-00	REC63V-11422-00	REC63V-11432-00	REC63V-11442-00
15F WCL	2001-03	REC63V-11412-00	REC63V-11422-00	REC63V-11432-00	REC63V-11442-00
15 WCS	2001-02	REC63V-11412-00	REC63V-11422-00	REC63V-11432-00	REC63V-11442-00
20C	1981-86	REC6G0-11412-00	REC6G0-11422-00	REC6G0-11432-00	
20C	1996-02		REC6G0-11422-00	REC6G0-11432-00	
20C M	1990-02	REC6G0-11412-00	REC6G0-11422-00	REC6G0-11432-00	
25D	1985-87	REC6G0-11412-00	REC6G0-11422-00	REC6G0-11432-00	
25D M	1990-97	REC6G0-11412-00	REC6G0-11422-00	REC6G0-11432-00	REC6G0-11442-00
25D MH	1998	REC6G0-11412-00	REC6G0-11422-00	REC6G0-11432-00	REC6G0-11442-00
25D MHL/MHS	2001	REC6G0-11412-00	REC6G0-11422-00	REC6G0-11432-00	REC6G0-11442-00
40X/E40X/MH	1998-02	REC66T-11412-00	REC66T-11422-00	REC66T-11432-00	REC66T-11442-00
40X MHL	2001-13	REC66T-11412-00	REC66T-11422-00	REC66T-11432-00	REC66T-11442-00
40X MHS	2001-13	REC66T-11412-00	REC66T-11422-00	REC66T-11432-00	REC66T-11442-00
40X W	2000	REC66T-11412-00	REC66T-11422-00	REC66T-11432-00	REC66T-11442-00
40X WL/WS	2001-03	REC66T-11412-00	REC66T-11422-00	REC66T-11432-00	REC66T-11442-00
40X WT	2000	REC66T-11412-00	REC66T-11422-00	REC66T-11432-00	REC66T-11442-00
40X WTL	2001-03	REC66T-11412-00	REC66T-11422-00	REC66T-11432-00	REC66T-11442-00



GUÍA RODAMIENTOS DE MOTOR — GUIDE ENGINE BEARING — GUIDA CUSCINETTI MOTORE — GUIDE ROULEMENTS DE MOTEUR

		1	2	3	4	5
4A	1985-87	REC93306-304U0		REC93306-304U0	REC93310-112V0	REC93310-418V1
4AC	1987-99	REC93306-304U0		REC93306-304U0	REC93310-112V0	REC93310-418V1
4AC	1999	REC93306-304U0		REC93306-304U0	REC93310-112V0	REC93310-418V1
4AC MHL/MHS	2001-03	REC93306-304U0		REC93306-304U0	REC93310-112V0	REC93310-418V1
4AS	1987-96	REC93306-304U0		REC93306-304U0	REC93310-112V0	REC93310-418V1
4BC	1998-99	REC93306-304U0		REC93306-304U0	REC93310-112V0	REC93310-418V1
4BC	1999	REC93306-304U0		REC93306-304U0	REC93310-112V0	REC93310-418V1
4BC MHL/MHS	2001-03	REC93306-304U0		REC93306-304U0	REC93310-112V0	REC93310-418V1
5C	1985-99	REC93306-304U0		REC93306-304U0	REC93310-112V0	REC93310-418V1
5C MHL/MHS	2001-13	REC93306-304U0		REC93306-304U0	REC93310-112V0	REC93310-418V1
5CS	1987-96	REC93306-304U0		REC93306-304U0	REC93310-112V0	REC93310-418V1
6C	1990	REC93306-204U0	REC93306-204U0	REC93306-204U0	REC93310-112V0	REC93310-418V1
6C	1990-02	REC93306-204U0	REC93306-204U0	REC93306-204U0	REC93310-112V0	REC93310-418V1
6C MHL/MHS	2001-06	REC93306-204U0	REC93306-204U0	REC93306-204U0	REC93310-112V0	REC93310-418V1
6C WHL/WHS	2001	REC93306-204U0	REC93306-204U0	REC93306-204U0	REC93310-112V0	REC93310-418V1
6C	1990	REC93306-204U0	REC93306-204U0	REC93306-204U0	REC93310-112V0	REC93310-418V1
6D	1990-98	REC93306-204U0	REC93306-204U0	REC93306-204U0	REC93310-112V0	REC93310-418V1
6D MHL/MHS	2001-06	REC93306-204U0	REC93306-204U0	REC93306-204U0	REC93310-112V0	REC93310-418V1
6D WHS	2001	REC93306-204U0	REC93306-204U0	REC93306-204U0	REC93310-112V0	REC93310-418V1
8C	1987-02	REC93306-204U0	REC93306-204U0	REC93306-204U0	REC93310-112V0	REC93310-418V1
8C MHL/MHS	2001-12	REC93306-204U0	REC93306-204U0	REC93306-204U0	REC93310-112V0	REC93310-418V1
8C MHX/WHL	2001-03	REC93306-204U0	REC93306-204U0	REC93306-204U0	REC93310-112V0	REC93310-418V1
E8D/MH	1996-99	REC93306-204U0	REC93306-204U0	REC93306-204U0	REC93602-14118	REC93310-418U0
9.9D	1985-89	REC93306-205U2	REC93304-205U0	REC93306-304U0	REC93602-14104	REC93310-620V5
9.9D	1985-95	REC93306-205U2	REC93304-205U0	REC93306-304U0	REC93602-14104	REC93310-620V5
9.9D	1990-95	REC93306-205U2	REC93304-205U0	REC93306-304U0	REC93602-14104	
9.9F	1995-99	REC93306-205U7	REC93306-205U7	REC93306-205U7	REC93602-14104	REC93310-620V5
9.9F MH	2000	REC93306-205U7	REC93306-205U7	REC93306-205U7	REC93602-14104	REC93310-620V5
9.9F MHL/MHS	2001-06	REC93306-205U7	REC93306-205U7	REC93306-205U7	REC93602-14104	
9.9F WC/WH	2000	REC93306-205U7	REC93306-205U7	REC93306-205U7	REC93602-14104	REC93310-620V5
9.9F WHL/WHS	2001	REC93306-205U7	REC93306-205U7	REC93306-205U7	REC93602-14104	REC93310-620V5
13.5A	1999	REC93306-205U7	REC93306-205U7	REC93306-205U7	REC93602-14104	REC93310-620V5
13.5A MH	2000	REC93306-205U7	REC93306-205U7	REC93306-205U7	REC93602-14104	REC93310-620V5
13.5A MHL/MHS	2001-04	REC93306-205U7	REC93306-205U7	REC93306-205U7	REC93602-14104	REC93310-620V5
13.5A WH	2000	REC93306-205U7	REC93306-205U7	REC93306-205U7	REC93602-14104	REC93310-620V5
15D	1985-89	REC93306-205U2	REC93304-205U0	REC93306-304U0	REC93602-14104	REC93310-620V5
15D	1985	REC93306-205U2	REC93304-205U0	REC93306-304U0	REC93602-14104	REC93310-620V5
15D	1990-95	REC93306-205U2	REC93304-205U0	REC93306-304U0	REC93602-14104	REC93310-620V5
15F	1995-99	REC93306-205U7	REC93306-205U7	REC93306-205U7	REC93602-14104	REC93310-620V5
15F MH	2000	REC93306-205U7	REC93306-205U7	REC93306-205U7	REC93602-14104	REC93310-620V5
15F MHL/MHS	2001-06	REC93306-205U7	REC93306-205U7	REC93306-205U7	REC93602-14104	REC93310-620V5
15F WC	2000	REC93306-205U7	REC93306-205U7	REC93306-205U7	REC93602-14104	REC93310-620V5
15F WCL/WCS	2001-03	REC93306-205U7	REC93306-205U7	REC93306-205U7	REC93602-14104	REC93310-620V5
20C	1985	REC93306-30510		REC93306-30510	REC93602-20M02	REC93310-522W0
20C	1986-93	REC93306-30510		REC93306-30510	REC93602-20M02	REC93310-522W0
20C	1993	REC93306-305U3		REC93306-305U3	REC93602-20M02	REC93310-522W0
20C M	1990-97	REC93306-305U3		REC93306-305U3	REC93602-20M02	REC93310-522W0
20C MH	1998	REC93306-305U3		REC93306-305U3	REC93602-20M02	REC93310-522W0
20C MHL/MHS	2001-02	REC93306-305U3		REC93306-305U3	REC93602-20M02	REC93310-522W0
20DEM	1994-98	REC93311-632U7	REC93306-305U3	REC93306-305U3		
20D MHOL/ MHOS	2001-06	REC93311-632U7	REC93306-305U3	REC93306-305U3		
20D WOL/WOS	2006	REC93311-632U7	REC93306-305U3	REC93306-305U3		
25B	1994-95	REC93311-636U6		REC93306-306V1	REC93603-18M09	REC93603-18M09
25B MHL/MHS	2001-06	REC93399-99951		REC93306-305U3	REC93602-20M02	
25B WCS	2001-02	REC93399-99951		REC93306-305U3	REC93602-20M02	
25D	1985	REC93306-30510		REC93306-30510	REC93602-20M02	REC93310-522W0
25D	1986-87	REC93306-30510		REC93306-30510	REC93602-20M02	REC93310-522W0
25D M	1990-97	REC93311-632U7	REC93306-305U3	REC93306-305U3	REC93602-20M02	REC93310-522W0
25D MH	1998	REC93311-632U7	REC93306-305U3	REC93306-305U3		REC93310-522W0
25D MHL/MHS	2001	REC93311-632U7	REC93306-305U3	REC93306-305U3	REC93602-20M02	REC93310-522W0
25J	1987-2000			REC93306-305U3		
25J	1992-2000	REC93311-632U7		REC93306-305U3		
25N	1994-98	REC93311-632U7	REC93306-305U3	REC93306-305U3		
25N MHOL/ MHOS	2001-06	REC93311-632U7	REC93306-305U3	REC93306-305U3		
25N WOL/WOS	2001-03	REC93311-632U7	REC93306-305U3	REC93306-305U3		
25V	1996	REC93311-632U7	REC93306-305U3	REC93306-305U3	REC93602-20M02	
25V	1997-98	REC93311-632V4	REC93306-305U3	REC93306-305U3	REC93602-20M02	REC93310-624U5
25V MHL/MHS	2001	REC93311-632V4	REC93306-305U3	REC93306-305U3	REC93602-20M02	REC93310-624U5
25V WCS	2001	REC93311-632V4	REC93306-305U3	REC93306-305U3	REC93602-20M02	REC93310-624U5
30A	1985			REC93306-30510	REC93602-20M02	REC93310-624U5
30A M	1990-92			REC93306-305U3	REC93602-20M02	REC93310-624U5
30D	1986-99			REC93306-305U3		
30D	1992-00	REC93311-632U7		REC93306-305U3		
30D EOL/ETOL	2001-06	REC93311-632U7		REC93306-305U3		
30D MHOL/ MHOS	2001-06	REC93311-632U7		REC93306-305U3		
30D OL	2001-03	REC93311-632U7		REC93306-305U3		
30D EOS	2001-06	REC93311-632U7		REC93306-305U3		
30G	1996	REC93311-632U7		REC93306-305U3	REC93602-20M02	REC93310-624U5

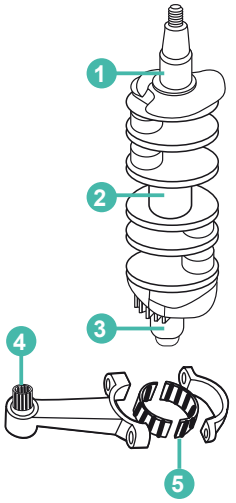

		1	2	3	4	5
30G	1996-98	REC93311-632V4		REC93306-305U3	REC93602-20M02	REC93310-624U5
30G MHS/WCS	2001	REC93311-632V4		REC93306-305U3	REC93602-20M02	REC93310-624U5
30H MHS	2001-03	REC93311-632V4		REC93306-305U3	REC93602-20M02	REC93310-624U5
30H WCS	2001-02	REC93311-632V4		REC93306-305U3	REC93602-20M02	
40H	1984-87	REC93306-305U8		REC93306-30510	REC93602-20M02	
40Q	1993-98		REC93311-832U4		REC93603-21111	REC93310-730V6
40Q E/M	1992		REC93311-832U4		REC93603-21111	REC93310-730V6
40R MHO	2000				REC93602-20M02	
40R ROS	2001				REC93602-20M02	
40V	1994-99	REC93306-305U8		REC93306-305U8	REC93602-20M02	
40V EO	2000	REC93306-305U8		REC93306-305U8	REC93602-20M02	
40V EOL/EOS	2001-06	REC93306-305U8		REC93306-305U8	REC93602-20M02	
40V ETO	2000	REC93306-305U8		REC93306-305U8	REC93602-20M02	
40V ETOL/ETOS	2001-03	REC93306-305U8		REC93306-305U8	REC93602-20M02	
40V MHOL/ MHOS	2001-06	REC93306-305U8		REC93306-305U8	REC93602-20M02	
40V MO	2000	REC93306-305U8		REC93306-305U8	REC93602-20M02	
40V MOS	2002-05	REC93306-305U8		REC93306-305U8	REC93602-20M02	
40X	1998	REC93306-307U0	REC93332-000UE	REC93306-306V5	REC93603-21111	REC93310-727U0
40X MH	2000	REC93306-307U0	REC93332-000UE	REC93306-306V5	REC93603-21111	REC93310-727U0
40X MHL	2001-06	REC93306-307U0	REC93332-000UE	REC93306-306V5	REC93603-21111	REC93310-727U0
40X WL/WS	2001	REC93306-307U0	REC93332-000UE	REC93306-306V5	REC93603-21111	REC93310-727U0
40X WT	2000	REC93306-307U0	REC93332-000UE	REC93306-306V5	REC93603-21111	REC93310-727U0
40X WTL	2001-03	REC93306-307U0	REC93332-000UE	REC93306-306V5	REC93603-21111	REC93310-727U0
40Y ETOL	2001-06	REC93306-305U8		REC93306-305U8	REC93602-20M02	
40Y MHOS	2001-06	REC93306-305U8		REC93306-305U8	REC93602-20M02	
E40G	2003	REC93306-307U0	REC93332-000UE	REC93306-306V1	REC93603-21111	REC93310-727V7
E40J	2003	REC93306-307U0	REC93332-000UE	REC93306-306V1	REC93603-21111	REC93310-727V7
50D	1984-90	REC93306-305U8		REC93306-30510	REC93602-20M02	
50G	1993-98	REC93311-636U6		REC93306-306V1	REC93603-18M09	REC93310-522W0
50G ETO	2000	REC93311-636U6		REC93306-306V1	REC93603-18M09	REC93310-522W0
50G ETOL	2001-06	REC93311-636U6		REC93306-306V1	REC93603-18M09	REC93310-522W0
50H	1994-99	REC93306-305U8		REC93306-305U8	REC93602-20M02	REC93310-522W0
50H EDO	2000	REC93306-305U8		REC93306-305U8	REC93602-20M02	REC93310-522W0
50H EDOL/EDOS	2001-02	REC93306-305U8		REC93306-305U8	REC93602-20M02	REC93310-522W0
50H MDO/MO	2000	REC93306-305U8		REC93306-305U8	REC93602-20M02	REC93310-522W0
55B	1993-98	REC93311-632U1			REC93603-21111	REC93311-832U4
55B E	1990-00	REC93311-632U1	REC93311-832U4		REC93603-21111	REC93311-832U4
55B EHD/ET	2000	REC93311-632U1	REC93311-832U4		REC93603-21111	REC93311-832U4
55B ETL	2001-02	REC93311-632U1	REC93311-832U4		REC93603-21111	REC93311-832U4
60F	1984-98	REC93311-636U6		REC93306-306V1	REC93603-18M09	
60F EO/ETO	2000	REC93311-636U6		REC93306-306V1	REC93603-18M09	
60F ETOL	2001-06	REC93311-636U6		REC93306-306V1	REC93603-18M09	
E60HMHD	2003	REC93311-636U6		REC93306-306V1		REC93310-527W1
E60 ELHB	2003	REC93311-636U6		REC93306-306V1		REC93310-527W1
E60H MHDL	2001-06	REC93311-636U6		REC93306-306V1	REC93603-18M09	
70B	1984-98	REC93311-636U6		REC93306-306V1	REC93603-18M09	
70B EDOL	2001	REC93311-636U6		REC93306-306V1	REC93603-18M09	
70B EO/ETO	2000	REC93311-636U6		REC93306-306V1	REC93603-18M09	
70B ETOL	2001-06	REC93311-636U6		REC93306-306V1	REC93603-18M09	
75A	1993-98	REC93310-636U4	REC93310-835U8	REC93306-206U5	REC93603-21111	REC93310-730V8
75A E	1990-00	REC93310-636U4	REC93310-835U8	REC93306-206U5	REC93603-21111	REC93310-730V8
75A EDL	2001-06	REC93310-636U4	REC93310-835U8	REC93306-206U5	REC93603-21111	REC93310-730V8
75A EM	1992	REC93310-636U4	REC93310-835U8	REC93306-206U5	REC93603-21111	REC93310-730V8
75A ET/ETL	2000	REC93310-636U4	REC93310-835U8	REC93306-206U5	REC93603-21111	REC93310-730V8
75A MHD	2000	REC93310-636U4	REC93310-835U8	REC93306-206U5	REC93603-21111	REC93310-730V8
75C	1998	REC93310-636U4	REC93310-835U8	REC93306-206U5	REC93603-21111	REC93310-730V8
75C ETO	2000	REC93310-636U4	REC93310-835U8	REC93306-206U5	REC93603-21111	REC93310-730V8
75C ETOL	2001-06	REC93310-636U4	REC93310-835U8	REC93306-206U5	REC93603-21111	REC93310-730V8
80A	1985-95	REC93310-636U4	REC93310-835U8	REC93306-206U5	REC93603-21111	REC93310-730V8
85A	1996-98	REC93310-636U4	REC93310-835U8	REC93306-206U5	REC93603-21111	REC93310-730V8
85A E	1990-2000	REC93310-636U4	REC93310-835U8	REC93306-206U5	REC93603-21111	REC93310-730V8
85A ET/ETL	2000	REC93310-636U4	REC93310-835U8	REC93306-206U5	REC93603-21111	REC93310-730V8
90A	1984-98	REC93310-636U4	REC93310-835U8	REC93306-206U5	REC93603-21111	REC93310-730V8
90A ETO/ETOL	2000	REC93310-636U4	REC93310-835U8	REC93306-206U5	REC93603-21111	REC93310-730V8
100A	1998	REC93311-940U3	REC93310-954U1	REC93306-208U0	REC93310-32337	REC93310-836V2
100A ETO	2000	REC93311-940U3	REC93310-954U1	REC93306-208U0	REC93310-32337	REC93310-836V2
100A ETOL	2001	REC93311-940U3	REC93310-954U1	REC93306-208U0	REC93310-32337	REC93310-836V2
115A	1984-87	REC93311-940U3	REC93310-954V3	REC93306-208U0	REC93603-21111	REC93310-836V2
115B	1988-92	REC93311-940U3	REC93310-954V3	REC93306-208U0	REC93603-21111	REC93310-836V2
115B	1993-96	REC93311-940U3	REC93310-954V3	REC93306-208U0	REC93310-32337	REC93310-836V2
115B ETOL	2001-02	REC93311-940U3	REC93310-954U1	REC93306-208U0	REC93310-32337	REC93310-836U0
115C	1988-91	REC93311-940U3	REC93310-954V3	REC93306-208U0	REC93603-21111	REC93310-836V2
115C	1992-98	REC93311-940U3	REC93310-954V3	REC93306-208U0	REC93310-32337	REC93310-836V2
115C ETO	2000	REC93311-940U3	REC93310-954U1	REC93306-208U0	REC93310-32337	REC93310-836V2
115C ETOL	2001	REC93311-940U3	REC93310-954U1	REC93306-208U0	REC93310-32337	REC93310-836U0
115C ETOX	1988-91	REC93311-940U3	REC93310-954U1	REC93306-208U0	REC93310-32337	REC93310-836V2
130B	1992-98	REC93311-940U3	REC93310-954V3	REC93306-208U0	REC93603-21111	REC93310-836V2
130B	2001-06	REC93311-940U3	REC93310-954V3	REC93306-208U0	REC93310-32337	REC93310-836V2
130B ETO	2000-2005	REC93306-307U0	REC93332-000UE	REC93306-208U0	REC93603-21111	REC93310-836V2
130B ETOL	2001-06	REC93311-940U3	REC93310-954U1	REC93306-208U0	REC93310-32337	REC93310-836V2
130B ETOX	2001	REC93311-940U3	REC93310-954U1	REC93306-208U0	REC93310-32337	REC93310-836U0
L130B	1988-91	REC93311-940U3	REC93310-954U1	REC93306-208U0	REC93310-32337	REC93310-836V2
L130B	1992-98	REC93311-940U3	REC93310-954U1	REC93306-208U0	REC93603-21111	REC93310-836V2

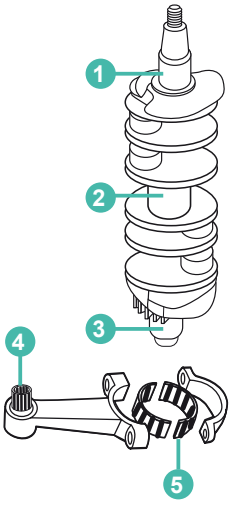

		1	2	3	4	5
L130B ETO	2000	REC93311-940U3	REC93310-954U1	REC93306-208U0	REC93310-32337	REC93310-836V2
L130B ETO	2001	REC93311-940U3	REC93310-954U1	REC93306-208U0	REC93310-32337	REC93310-836V2
140A	1984-89	REC93311-940U3	REC93310-954U1	REC93306-208U0	REC93310-32337	REC93310-836V2
140B	1988-89	REC93311-940U3	REC93310-954V3	REC93306-208U0	REC93603-21111	REC93310-836V2
L140B	1989	REC93311-940U3	REC93310-954V3	REC93306-208U0	REC93603-21111	REC93310-836V2
150A	1984-89	REC93311-940U3	REC93310-954V3	REC93306-208U0	REC93603-21111	REC93310-836V2
150A ET	1998-00	REC93311-940U3	REC93310-954V3	REC93306-208U0	REC93603-21111	REC93310-836V2
150A ETL	2001-02	REC93311-940U3	REC93310-954U1	REC93306-208U0	REC93310-32337	REC93310-836V2
150A ETX	2001-02	REC93311-940U3	REC93310-954U1	REC93306-208U0	REC93310-32337	REC93310-836V2
L150C	1988-91	REC93311-940U3	REC93310-954U1	REC93306-208U0	REC93310-32337	REC93310-836V2
150C	1988-91	REC93311-940U3	REC93310-954V3	REC93306-208U0	REC93603-21111	REC93310-836V2
150C	1992-95	REC93311-940U3	REC93310-954V3	REC93306-208U0	REC93603-21111	REC93310-836V2
150F	1996-98	REC93311-940U3	REC93310-954V3	REC93306-208U0	REC93310-32337	REC93310-836V2
150F ETO	2000	REC93311-940U3	REC93310-954U1	REC93306-208U0	REC93310-32337	REC93310-836V2
150F ETOL	2001-06	REC93311-940U3	REC93310-954U1	REC93306-208U0	REC93310-32337	REC93310-836V2
150F ETOX	2001-06	REC93311-940U3	REC93310-954U1	REC93306-208U0	REC93310-32337	REC93310-836V2
D150H	1999	REC93311-940U3	REC93310-954U1	REC93306-208U0	REC93310-32337	REC93310-836V2
D150HETO	2001-02	REC93311-940U3	REC93310-954U1	REC93306-208U0	REC93310-32337	REC93310-836V2
L150A	1988-89	REC93311-940U3	REC93310-954U1	REC93306-208U0	REC93310-32337	REC93310-836V2
L150C	1990-95	REC93311-940U3	REC93310-954V3	REC93306-208U0	REC93603-21111	REC93310-836V2
L150F	1996-98	REC93311-940U3	REC93310-954V3	REC93306-208U0	REC93310-32337	REC93310-836V2
L150F ETO	2000	REC93311-940U3	REC93310-954U1	REC93306-208U0	REC93310-32337	REC93310-836V2
L150F ETOL	2001	REC93311-940U3	REC93310-954U1	REC93306-208U0	REC93310-32337	REC93310-836V2
L150 EOTX	2001	REC93311-940U3	REC93310-954U1	REC93306-208U0	REC93310-32337	REC93310-836V2
LZ150PETO	2000-06	REC93311-940U3	REC93310-954U1	REC93306-208U0	REC93310-32337	REC93310-836V2
Z150P ETO	2000	REC93311-940U3	REC93310-954U1	REC93306-208U0	REC93310-32337	REC93310-836U0
Z150P ETO	2001-06	REC93311-940U3	REC93310-954U1	REC93306-208U0	REC93310-32337	REC93310-836U0
Z150Q ETO	2000	REC93311-940U3	REC93310-954U1	REC93306-208U0	REC93310-32337	REC93310-836U0
Z150Q ETOL	2001-06	REC93311-940U3	REC93310-954U1	REC93306-208U0	REC93310-32337	REC93310-836U0
175A	1984-89	REC93311-940U3	REC93310-954U1	REC93306-208U0	REC93310-32337	REC93310-836U0
175B	1978-95	REC93311-940U3	REC93310-954V3	REC93306-208U0	REC93603-21111	REC93310-836V2
175D	1996-98	REC93311-940U3	REC93310-954V3	REC93306-208U0	REC93310-32337	REC93310-836V2
175D ETO/ETOL	2000	REC93311-940U3	REC93310-954U1	REC93306-208U0	REC93310-32337	REC93310-836V2
175D ETOX/ETOL	2001-02	REC93311-940U3	REC93310-954U1	REC93306-208U0	REC93310-32337	REC93310-836V2
175D ETOL	2001	REC93311-940U3	REC93310-954U1	REC93306-208U0	REC93310-32337	REC93310-836V2
Z175G ETOX	2001-06	REC93311-940U3	REC93310-954U1	REC93306-208U0	REC93310-32337	REC93310-836U0
200A	1984-89	REC93311-940U3	REC93310-954U1	REC93306-208U0	REC93310-32337	REC93310-836U0
200B	1990-95	REC93311-940U3	REC93310-954V3	REC93306-208U0	REC93603-21111	REC93310-836V2
200F	1996-98	REC93311-940U3	REC93310-954V3	REC93306-208U0	REC93310-32337	REC93310-836V2
200F ETO/ETOL	2000	REC93311-940U3	REC93310-954U1	REC93306-208U0	REC93310-32337	REC93310-836V2
200F ETOX	2001-06	REC93311-940U3	REC93310-954U1	REC93306-208U0	REC93310-32337	REC93310-836V2
200G	1999-02	REC93311-940U3	REC93310-954U1	REC93306-208U0	REC93310-32337	REC93310-836V2
200G ETO/ETOL	2000	REC93311-940U3	REC93310-954U1	REC93306-208U0	REC93310-32337	REC93310-836V2
L200A	1988-91	REC93311-940U3	REC93310-954U1	REC93306-208U0	REC93310-32337	REC93310-836V2
L200B	1992-95	REC93311-940U3	REC93310-954V3	REC93306-208U0	REC93603-21111	REC93310-836V2
L200F	1996-98	REC93311-940U3	REC93310-954V3	REC93306-208U0	REC93310-32337	REC93310-836V2
L200F ETO/ETOL	2000	REC93311-940U3	REC93310-954U1	REC93306-208U0	REC93310-32337	REC93310-836V2
LZ200N ETO	2000	REC93311-940U3	REC93310-954U1	REC93306-208U0	REC93310-32337	REC93310-836V2
LZ200NETO		REC93311-940U3	REC93310-954U1	REC93306-208U0	REC93310-32337	REC93310-836U0
Z200N ETO	2001-06	REC93311-940U3	REC93310-954U1	REC93306-208U0	REC93310-32337	REC93310-836U0
Z200 N ETOL	2000	REC93311-940U3	REC93310-954U1	REC93306-208U0	REC93310-32337	REC93310-836U0
Z200N ETOX/ ETOL	2001-06	REC93311-940U3	REC93310-954U1	REC93306-208U0	REC93310-32337	REC93310-836U0
220A	2003-06	REC93311-940U3	REC93310-954U1	REC93306-208U0	REC93310-32337	REC93310-836U0
225A	1984-86	REC93311-940U3	REC93310-954V3	REC93306-208U0	REC93603-21111	REC93310-836V2
225A	1987-89	REC93311-940U3	REC93310-954V3	REC93306-208U0	REC93603-21111	REC93310-836V2
225D ETO	2000	REC93311-940U3	REC93310-954U1	REC93306-208U0	REC93310-32337	REC93310-836V2
225D ETOL/ETOX	2001-03	REC93311-940U3	REC93310-954U1	REC93306-208U0	REC93310-32337	REC93310-836V2
250AET	1996-06				REC93310-326V4	
250B	95-02				REC93310-326V4	
225G	99-03				REC93310-326V4	
225A	1984-86	REC93311-940U3	REC93310-954V3	REC93306-208U0	REC93603-21111	REC93310-836V2
225A	1987-89	REC93311-940U3	REC93310-954V3	REC93306-208U0	REC93603-21111	REC93310-836V2
225D ETO	2000	REC93311-940U3	REC93310-954U1	REC93306-208U0	REC93310-32337	REC93310-836V2
225D ETOL/ETOX	2001-03	REC93311-940U3	REC93310-954U1	REC93306-208U0	REC93310-32337	REC93310-836V2
250AET	1996-06				REC93310-326V4	
250B	95-02				REC93310-326V4	
225G	99-03				REC93310-326V4	
Z, LZ 225/250/300 HP V6	1990-10	REC93306-209U1				

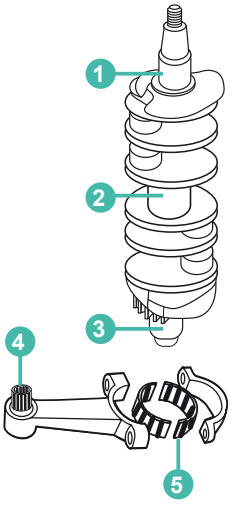

GUÍA DE BIELAS — GUIDE CONNECTING ROAD — GUIDA BIELLE — GUIDE DE BIELLES

		1	2	3	4	5
2B	1986-02	REC646-11651-02			REC646-11681-00	REC90209-18112
2MSHA/S/B	2002-03	REC646-11651-02			REC646-11681-00	
2CMHS	2010	REC646-11651-02			REC646-11681-00	
4A	1985-87	REC6E0-11651-01	REC6G1-11633-00		REC6G1-11681-00	
4AC	1987-99	REC6E0-11651-01	REC6G1-11633-00		REC6G1-11681-00	REC90209-18112
4AC MHL/HS	2001-03	REC6E0-11651-01	REC6G1-11633-00		REC6G1-11681-00	REC90209-18112
4AS	1987-96	REC6E0-11651-01	REC6G1-11633-00		REC6G1-11681-00	REC90209-18112
4BC	1998-99	REC6E0-11651-01	REC6G1-11633-00		REC6G1-11681-00	REC90209-18112
4BC	1999	REC6E0-11651-01	REC6G1-11633-00		REC6G1-11681-00	REC90209-18112
4BC MHL/HS	2001-03	REC6E0-11651-01	REC6G1-11633-00		REC6G1-11681-00	REC90209-18112
5C	1985-99	REC6E0-11651-01	REC6G1-11633-00		REC6G1-11681-00	REC90209-18112
5C MHL/MHS	2001-06	REC6E0-11651-01	REC6G1-11633-00	REC90201-12565	REC6G1-11681-00	REC90209-18112
5CS	1987-96	REC650-11651-04	REC634-11633-00	REC90201-14377	REC682-11681-00	REC90209-20159
6C	1990		REC634-11633-00	REC90201-14377	REC682-11681-00	REC90209-20159
6C	1990-98		REC634-11633-00	REC90201-14377	REC682-11681-00	REC90209-20159
6C MHL/HS	2001-06		REC634-11633-00	REC90201-14377	REC682-11681-00	REC90209-18112
6C WHL/HS	2001		REC634-11633-00	REC90201-14377	REC682-11681-00	REC90209-18112
6C	1990		REC634-11633-00	REC90201-14377	REC682-11681-00	REC90209-18112
6D	1990-98		REC634-11633-00	REC90201-14377	REC682-11681-00	REC90209-18112
6D MHL/HS	2001-06		REC634-11633-00	REC90201-14377	REC682-11681-00	
6D WHS	2001		REC634-11633-00	REC90201-14377	REC682-11681-00	REC90209-18112
8C	1990-98	REC677-11651-00	REC634-11633-00	REC90201-14377	REC682-11681-00	REC90209-18112
8C	1990	REC677-11651-00	REC634-11633-00	REC90201-14377	REC682-11681-00	REC90209-18112
8C MHL/HS	2001-06	REC677-11651-00	REC634-11633-00	REC90201-14377	REC682-11681-00	REC90209-20159
8C MHX	2001-03	REC677-11651-00	REC634-11633-00	REC90201-14377	REC682-11681-00	REC90209-20159
8C WHL7HS	2001-02	REC677-11651-00	REC634-11633-00	REC90201-14377	REC682-11681-00	REC90209-20159
E8D	1997-98	REC6E0-11651-01	REC634-11633-00	REC90201-14377	REC682-11681-00	REC90209-18112
E8D MH	1999	REC6E0-11651-01	REC634-11633-00	REC90201-14377	REC682-11681-00	REC90209-18112
9.9D	1985-89	REC650-11651-04	REC634-11633-00	REC90201-14377	REC682-11681-00	
9.9D	1985-95	REC6K4-11651-00	REC634-11633-00	REC90201-14377	REC682-11681-00	
9.9D	1990-95	REC6K4-11651-00	REC634-11633-00	REC90201-14377	REC648-11681-00	REC90209-20159
9.9F	1995-99	REC648-11651-00	REC648-11633-00	REC90201-14377	REC682-11681-00	REC90209-20159
9.9F MH	2000	REC648-11651-00	REC648-11633-00	REC90201-14377	REC682-11681-00	REC90209-20159
9.9F MHL	2001-06	REC648-11651-00	REC648-11633-00	REC90201-14377	REC682-11681-00	REC90209-20159
9.9F MHS	2001-06	REC648-11651-00	REC648-11633-00	REC90201-14377	REC682-11681-00	REC90209-20159
9.9F WC	2000	REC648-11651-00	REC648-11633-00	REC90201-20M27	REC682-11681-00	
9.9F WH	2000	REC689-11651-00	REC689-11633-00	REC90201-20M27	REC689-11681-00	REC90209-24M03
9.9F WHL/HS	2001	REC689-11651-00	REC689-11633-00	REC90201-20M27	REC689-11681-00	REC90209-24M03
13.5A	1999	REC689-11651-00	REC689-11633-00	REC90201-20M27	REC689-11681-00	REC90209-24M03
13.5A MH	2000	REC689-11651-00	REC689-11633-00	REC90201-20M27	REC689-11681-00	REC90209-24M03
13.5A MHL	2001-04	REC689-11651-00	REC689-11633-00	REC90201-20M27	REC689-11681-00	REC90209-24M03
13.5A MHS	2001-04	REC689-11651-00	REC648-11633-00	REC90201-14377	REC648-11681-00	
13.5A WH	2000	REC648-11651-00	REC648-11633-00	REC90201-14377	REC648-11681-00	
15D	1985-89	REC648-11651-00	REC648-11633-00	REC90201-14377	REC648-11681-00	
15D	1985-95	REC648-11651-00	REC648-11633-00	REC90201-14377	REC648-11681-00	
15D	1990-95	REC648-11651-00	REC648-11633-00	REC90201-14377	REC648-11681-00	
15F	1995-99	REC648-11651-00	REC689-11633-00	REC90201-20M27	REC689-11681-00	REC90209-24M03
15F MH	2000	REC689-11651-00	REC689-11633-00	REC90201-20M27	REC689-11681-00	REC90209-24M03
15F MHL/HS	2001-06	REC689-11651-00	REC689-11633-00	REC90201-20M27	REC689-11681-00	REC90209-24M03
13.5A MH	2000	REC689-11651-00	REC689-11633-00	REC90201-20M27	REC689-11681-00	REC90209-24M03
13.5A MHL	2001-04	REC689-11651-00	REC689-11633-00	REC90201-20M27	REC689-11681-00	REC90209-24M03
13.5A MHS	2001-04	REC689-11651-00	REC648-11633-00	REC90201-14377	REC648-11681-00	
13.5A WH	2000	REC648-11651-00	REC648-11633-00	REC90201-14377	REC648-11681-00	
15D	1985-89	REC648-11651-00	REC648-11633-00	REC90201-14377	REC648-11681-00	
15D	1985-95	REC648-11651-00	REC648-11633-00	REC90201-14377	REC648-11681-00	
15D	1990-95	REC648-11651-00	REC648-11633-00	REC90201-14377	REC648-11681-00	
15F	1995-99	REC648-11651-00	REC689-11633-00	REC90201-20M27	REC689-11681-00	REC90209-24M03
15F MH	2000	REC689-11651-00	REC689-11633-00	REC90201-20M27	REC689-11681-00	REC90209-24M03
15F MHL/HS	2001-06	REC689-11651-00	REC689-11633-00	REC90201-20M27	REC689-11681-00	REC90209-24M03
15F WC	2000	REC689-11651-00	REC689-11633-00	REC90201-20M27	REC689-11681-00	REC90209-24M03
15F WCL	2001-03	REC689-11651-00	REC689-11633-00	REC90201-20M27	REC689-11681-00	REC90209-24M03
15F WCS	2001-02	REC689-11651-00	REC689-11633-00	REC90201-20M27	REC689-11681-00	REC90209-24M03
20C	1985-93	REC689-11651-00	REC689-11633-00	REC90201-20M27	REC689-11681-00	REC90209-24M03
20C	1986-02	REC648-11651-00	REC648-11633-00	REC90201-20417	REC648-11681-00	
20C	1993	REC6F5-11651-00	REC6F5-11633-00	REC90201-20417	REC66T-11681-00	REC90209-27M07
20C M	1990-97	REC6F5-11651-00	REC6F5-11633-00	REC90201-20417	REC66T-11681-00	REC90209-27M07
20C MH	1998	REC6F5-11651-00	REC6F5-11633-00	REC90201-20417	REC66T-11681-00	REC90209-27M07
20C MHL	2001-02	REC6F5-11651-00	REC6F5-11633-00	REC90201-20417	REC66T-11681-00	REC90209-27M07
20C MHS	2001-02	REC6F5-11651-00	REC6F5-11633-00	REC90201-20417	REC66T-11681-00	REC90209-27M07
20D	1994-98	REC6F5-11651-00	REC6F5-11633-00	REC90201-20417	REC66T-11681-00	REC90209-27M07
20D MHOL	2001-06	REC6F5-11651-00	REC6F5-11633-00	REC90201-20417	REC66T-11681-00	REC90209-27M07
20D MHOS	2001-06	REC6F5-11651-00	REC6F5-11633-00	REC90201-20417	REC66T-11681-00	REC90209-27M07
20D WOL/OS	2006	REC6F5-11651-00	REC6F5-11633-00	REC90201-20417	REC66T-11681-00	REC90209-27M07
25B	1994-02	REC689-11651-00	REC663-11633-00	REC90201-20417	REC689-11681-00	REC90209-24M03
25B MHL/HS	2001-06	REC689-11651-00	REC663-11633-00	REC90201-20417	REC689-11681-00	REC90209-24M03
25B WCS	2001-02	REC689-11651-00	REC663-11633-00	REC90201-20417	REC689-11681-00	REC90209-24M03
25D	1985-01	REC648-11651-00	REC663-11633-00	REC90201-20417	REC648-11681-00	
25D	1986-87	REC648-11651-00	REC663-11633-00	REC90201-20417	REC648-11681-00	
25D M	1990-97	REC648-11651-00	REC663-11633-00	REC90201-20417		
25D MH	1998	REC648-11651-00				
25D MHL	2001	REC648-11651-00				

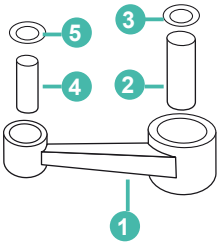

		1	2	3	4	5
25D MHS	2001	REC648-11651-00				
25N	1994-98		REC6H3-11633-00	REC90201-20417		
25N MHOL/S	2001-06	REC689-11651-00	REC663-11633-00	REC90201-20417		
25N WOL/WOS	2001-03	REC689-11651-00	REC663-11633-00	REC90201-20417		
25V	1996-98	REC689-11651-00	REC663-11633-00	REC90201-20417	REC689-11681-00	REC90209-24M03
25V MHL/HS	2001	REC689-11651-00	REC663-11633-00	REC90201-20417	REC689-11681-00	REC90209-24M03
25V WCS	2001	REC689-11651-00	REC663-11633-00	REC90201-20417	REC689-11681-00	REC90209-24M03
30A	1985	REC689-11651-00	REC663-11633-00	REC90201-20417	REC689-11681-00	REC90209-24M03
30A M	1990-92	REC689-11651-00	REC663-11633-00	REC90201-20417	REC689-11681-00	REC90209-24M03
30D	1986-00	REC689-11651-00	REC663-11633-00	REC90201-20417		
30D EOL/EOS	2001-06	REC689-11651-00	REC663-11633-00	REC90201-20417		
30D ETOL	2001-06	REC689-11651-00	REC663-11633-00	REC90201-20417		
30D MHOL	2001-06	REC689-11651-00	REC663-11633-00	REC90201-20417		
30D MHOS	2001-05	REC689-11651-00	REC663-11633-00	REC90201-20417		
30D OL	2001-03	REC689-11651-00	REC663-11633-00	REC90201-20417		
30D EOS	2001-06		REC6R5-11633-00	REC90201-23M01		
40G/J	1986-89	REC6F5-11651-00	REC6F5-11633-00		REC6F5-11681-00	REC90209-27M11
40R ROS	2001		REC6R5-11633-00	REC90201-23M01		
40V	1994-99	REC6H4-11651-00	REC6R5-11633-00	REC90201-23M01		
40V EO	2000	REC6E5-11651-00	REC6R5-11633-00	REC90201-23M01		
40V EOL/EOS	2001-06		REC6R5-11633-00	REC90201-23M01		
40V ETO	2000	REC6E5-11651-00	REC6E5-11633-00			
40V ETOL	2001-03	REC6E5-11651-00				
40V ETOS	2001-03	REC6E5-11651-00				
40V MHOL	2001-06	REC6E5-11651-00	REC6E5-11633-00			
40V MHOS	2001-06		REC6R5-11633-00	REC90201-23M01		
40V MO	2000		REC6R5-11633-00	REC90201-23M01		
40V MOS	2002-05		REC6R5-11633-00	REC90201-23M01		
40X	1998	REC6F5-11651-00	REC6F5-11633-00	REC90201-23M01	REC66T-11681-00	REC90209-27M07
40X MH	2000	REC6F5-11651-00	REC6F5-11633-00	REC90201-23M01	REC66T-11681-00	REC90209-27M07
40X MHL	2001-06	REC6F5-11651-00	REC6F5-11633-00	REC90201-23M01	REC66T-11681-00	REC90209-27M07
40 MHS	2001-02	REC6F5-11651-00	REC6F5-11633-00	REC90201-23M01	REC66T-11681-00	REC90209-27M07
40X W	2000	REC6F5-11651-00	REC6F5-11633-00	REC90201-23M01	REC66T-11681-00	REC90209-27M07
40X WL	2001	REC6F5-11651-00	REC6F5-11633-00	REC90201-23M01	REC66T-11681-00	REC90209-27M07
40X WS	2001	REC6E5-11651-00	REC6F5-11633-00		REC66T-11681-00	REC90209-27M07
40X WT	2000	REC6E5-11651-00	REC6F5-11633-00	REC90201-23M01	REC66T-11681-00	REC90209-27M07
40X WTL	2001-03		REC6F5-11633-00	REC90201-23M01	REC66T-11681-00	REC90209-27M07
40Y ETOL	2001-06		REC6R5-11633-00	REC90201-23M01		
40Y MHOS	2001-06		REC6R5-11633-00	REC90201-23M01		
40GM,W,J	2003-04	REC6F5-11651-00	REC6F5-11633-00	REC90209-27M07	REC6F5-11681-00	REC90209-27M07
50D	1984-87		REC6R5-11633-00	REC90201-23M01		
50G	1993-98	REC6H4-11651-00	REC648-11633-00		REC6G0-11681-00	REC90209-24M03
50G ETO	2000	REC6E5-11651-00	REC648-11633-00	REC90201-23M01	REC6G0-11681-00	REC90209-24M03
50G ETOL	2001-06		REC648-11633-00	REC90201-23M01	REC6G0-11681-00	REC90209-24M03
50H	1994-99	REC6H4-11651-00	REC648-11633-00	REC90201-23M01	REC6G0-11681-00	REC90209-24M03
50H EDO	2000	REC6H4-11651-00	REC648-11633-00	REC90201-23M01	REC6G0-11681-00	REC90209-24M03
50H EDOL	2001-02	REC6H4-11651-00	REC648-11633-00	REC90201-23M01	REC6G0-11681-00	REC90209-24M03
50H EDOS	2001-02	REC6E5-11651-00	REC648-11633-00		REC6G0-11681-00	REC90209-24M03
50H MDO	2000	REC6E5-11651-00	REC648-11633-00	REC90201-23M01	REC6G0-11681-00	REC90209-24M03
50H MO	2000		REC648-11633-00	REC90201-23M01	REC6G0-11681-00	REC90209-24M03
55B	1993-98	REC688-11651-00	REC6R5-11633-00	REC90201-23M01		
70B ETOL	2001-06	REC6E5-11651-00	REC6R5-11633-00	REC90201-23M01		
75A	1993-98	REC688-11651-00	REC6R5-11633-00	REC90201-23M01		
75A E	1990-00	REC688-11651-00	REC6R5-11633-00	REC90201-23M01		
75A EDL	2001-06	REC688-11651-00	REC6R5-11633-00	REC90201-23M01		
75A EM	1992	REC688-11651-00	REC6R5-11633-00	REC90201-23M01		
75A ET	2000	REC688-11651-00				
75A ETL	2001-02	REC688-11651-00				
75A MHD	2000	REC688-11651-00				
75C	1998	REC688-11651-00				
75C ETO	2000	REC688-11651-00				
75C ETOL	2001-06	REC688-11651-00				
80A	1985-96	REC688-11651-00				
85A	1996-98	REC688-11651-00				
85A E	1990-00	REC688-11651-00				
85A ET	2000	REC688-11651-00				
85A ETL	2001-02	REC688-11651-00				
90A	1984-98	REC688-11651-00				
90A ETO	2000-00	REC688-11651-00				
90A ETOL	2001-06	REC688-11651-00				
V4-V6 4 21.5		REC6E5-11651-00				
E60 ELHB	2003				REC6K5-11681-00	
E60HMHD	2003				REC6K5-11681-00	
225 AET	1986		REC6E5-11633-00			
115 B	1988-90	REC6E5-11650-01	REC6K7-11633-00	REC90201-21M75		
115BE-T	1991-92	REC6E5-11650-01	REC6K7-11633-00	REC90201-21M75		
140 BETO	1988-89	REC6E5-11650-01	REC6K7-11633-00	REC90201-21M75		
150 AETO	1988-89	REC6E5-11650-01	REC6K7-11633-00	REC90201-21M75		
200-225 BETO	1990-92	REC6E5-11650-01	REC6K7-11633-00	REC90201-21M75		
175 BETO	1990-92	REC6E5-11650-01	REC6K7-11633-00	REC90201-21M75		
250A,E 225C 250B	1990-06	REC61A-11650-00				

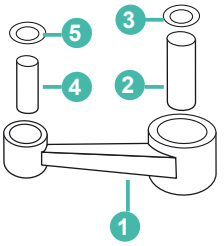

2T STROKES

KITS DE PISTONES

La gama de pistones RECMAR®, se suministrará siempre como kit, compuesto por pistón, aros, bulón y clips. Eventualmente las referencias antiguas sufren cambios de numeración. En caso de duda contacten con nuestros técnicos comerciales.

PISTON KITS

The RECMAR® piston assortment is allways supplied as a set (piston, rings, pins and bearings). Old references may change. In case of any doubt contact our technicians.

KIT PISTONE

La gamma dei pistoni RECMAR®, si vende sempre come kit, composto da pistoni, fasce, bulloni e clips. Le referenze vecchie avranno un cambio di numerazione. In caso di dubbi contattare i nostri tecnici commerciali.

KIT PISTON

La gamme de pistons RECMAR® sera toujours fournie en kit, comprenant piston, segments, axe et clips. Les anciennes références subissent des modifications de numérotation. En cas de doute, contactez nos technico commerciaux

	STD Ø 50mm	
	REF	OEM
	REC6E0-11631-00-98K	6E0-11631-00-98
	REC6G1-11610-00	6G1-11610-00
	REC6G1-11633-00	6G1-11633-00
	REC93310-112V0	93310-112V0
	REC93450-13022	93450-13022



4AC (1985-02)
4AS (1987-96)
5C (1994-98)
5CS (1994-96)

	STD Ø 50mm		0.25		0.50	
	REF	OEM	REF	OEM	REF	OEM
	REC677-11631-00K	677-11631-00-97	REC677-11635-00K	677-11635-00	REC677-11636-00K	677-11636-00
	REC647-11610-00	647-11610-00				
	REC6G1-11633-00	6G1-11633-00	REC6G1-11633-00	6G1-11633-00	REC6G1-11633-00	6G1-11633-00
	REC93602-14118	93602-14118	REC93602-14118	93602-14118	REC93602-14118	93602-14118
	REC93450-13022	93450-13022	REC93450-13022	93450-13022	REC93450-13022	93450-13022



E8D (1997-99)
E8DMH (1998-03)

	STD Ø 56mm		0.25		0.50	
	REF	OEM	REF	OEM	REF	OEM
	REC6E7-11631-00K	6E7-11631-00	REC6E7-11635-00K	6E7-11635-00	REC6E7-11636-00K	6E7-11636-00
	REC682-11610-01	682-11610-00	REC682-11610-11	682-11610-11	REC682-11610-21	682-11610-21
	REC634-11633-00	634-11633-00	REC634-11633-00	634-11633-00	REC634-11633-00	634-11633-00
	REC93602-14104	93602-14104	REC93602-14104	93602-14104	REC93602-14104	93602-14104
	REC93450-15023	93450-15023	REC93450-15023	93450-15023	REC93450-15023	93450-15023



9.9D/15D (1985-95)
9.9F/FMH/MSH (1995-14)
15F/FEM/MSH/FMH/MH
(1995-14)

	STD Ø 72mm		0.25		0.50	
	REF	OEM	REF	OEM	REF	OEM
	REC6H3-11631-01K	6H3-11631-01-96	REC6H3-11635-01K	6H3-11635-01	REC6H3-11636-01K	6H3-11636-01
	REC6K5-11601-02	6K5-11601-02	REC6K5-11601-12	6K5-11601-12	REC6K5-11601-22	6K5-11601-22
	REC6H3-11633-00	6H3-11633-00	REC6H3-11633-00	6H3-11633-00	REC6H3-11633-00	6H3-11633-00
	REC93603-18M09	93603-18M09	REC93603-18M09	93603-18M09	REC93603-18M09	93603-18M09



25B/BETO (1994-95)
50G/GEO/GETO (1993- 07)
60F/FEO/FEDO/FETO/FEH/TR/TLR (1990-07)
70BEH/BEO/B/BEM/BETO/BEDO/TR (1990-13)

	STD Ø 72mm		0.25		0.50	
	REF	OEM	REF	OEM	REF	OEM
	REC61N-11631-00K	61N-11631-00-95	REC61N-11635-00K	61N-11635-00	REC61N-11636-00K	61N-11636-00
	REC61N-11603-00	61N-11603-00	REC61N-11604-00	61N-11604-00	REC61N-11605-00	61N-11605-00
	REC689-11633-00	689-11633-00	REC689-11633-00	689-11633-00	REC689-11633-00	689-11633-00
	REC93602-20M02	93602-20M02	REC93602-20M02	93602-20M02	REC93602-20M02	93602-20M02
	REC688-11634-00	688-11634-00	REC688-11634-00	688-11634-00	REC688-11634-00	688-11634-00



25VE/VM (1996-01)
25B/BMH (2001-10)
30G/GE (1996-00)
E30HMH(2003)
E30HMH/HW (2003-12)

	STD Ø 67mm		0.25		0.50	
	REF	OEM	REF	OEM	REF	OEM
	REC6H4-11631-01K	6H4-11631-01-95	REC6H4-11635-01K	6H4-11635-01	REC6H4-11636-01K	6H4-11636-01
	REC63D-11603-00	63D-11603-00			REC63D-11605-00	63D-11605-00
	REC648-11633-00	648-11633-00	REC648-11633-00	648-11633-00	REC648-11633-00	648-11633-00
	REC93602-20M02	93602-20M02	REC93602-20M02	93602-20M02	REC93602-20M02	93602-20M02
	REC6H4-11634-01	6H4-11634-01	REC6H4-11634-01	6H4-11634-01	REC6H4-11634-01	6H4-11634-01



25Q/QEO (1990-94)
40V/VMH/VETO/VMH/MLH/VMHO/VE/VEO/TLR/VETO/YETO/H/HE (1995-13)
C40T/TLR (1995-02)
50H/HRD/HMHD/HETO/HEDO/HWM/D/DE/DEMTO (1989-03)

	STD Ø 72mm	
	REF	OEM
	REC689-11631-00K	689-11631-00-95
	REC689-11610-00	689-11610-01
	REC689-11633-00	689-11633-00
	REC93602-20M02	93602-20M02
	REC663-11634-00	633-11634-00



30A (1985-1992)

	STD Ø 59mm	
	REF	OEM
	REC6J8-11631-02	6J8-11631-02-97



25J/JEO/JETO/ESH (1990-99)
30DETO/DEO/DE/DMH/D/ELH/
DWH (1990-12)

	STD Ø 76mm		0.25		0.50	
	REF	OEM	REF	OEM	REF	OEM
	REC6F6-11631-00K	6F6-11631-00-95	REC6F6-11635-00K	6F6-11635-00	REC6F6-11636-00K	6F6-11636-00
	REC6F5-11610-00	6F5-11610-00	REC6F5-11610-10	6F5-11610-10	REC6F5-11610-20	6F5-11610-20
	REC6F5-11633-00	6F5-11633-00	REC6F5-11633-00	6F5-11633-00	REC6F5-11633-00	6F5-11633-00
	REC93603-21111	93603-21111	REC93603-21111	93603-21111	REC93603-21111	93603-21111
	REC663-11634-00	663-11634-00	REC663-11634-00	663-11634-00	REC663-11634-00	663-11634-00



E40GMH/JMH/JWH (2003)
40GWH/JWH (2003)

	STD Ø 80mm		0.25		0.50	
	REF	OEM	REF	OEM	REF	OEM
	REC66T-11631-01K	66T-11631-01-93	REC66T-11635-01K	66T-11635-01	REC66T-11636-01K	66T-11636-01
	REC66T-11603-00	66T-11603-00	REC66T-11604-00	66T-11604-00	REC66T-11605-00	66T-11605-00
	REC6F5-11633-00	6F5-11633-00	REC6F5-11633-00	6F5-11633-00	REC6F5-11633-00	6F5-11633-00
	REC93603-21111	93603-21111	REC93603-21111	93603-21111	REC93603-21111	93603-21111
	REC663-11634-00	663-11634-00	REC663-11634-00	663-11634-00	REC663-11634-00	663-11634-00



E40X/XMH/XW (2002-13)
40XMH/XW (2003-13)

	STD Ø 67mm		0.25		0.50	
	REF	OEM	REF	OEM	REF	OEM
	REC6H4-11631-00K	6H4-11631-00-96	REC6H4-11635-00K	6H4-11635-00	REC6H4-11636-00K	6H4-11636-00
	REC6H4-11610-00-00	6H4-11610-00				
	REC648-11633-00	648-11633-00	REC648-11633-00	648-11633-00	REC648-11633-00	648-11633-00
	REC93602-20M02	93602-20M02	REC93602-20M02	93602-20M02	REC93602-20M02	93602-20M02
	REC6H4-11634-01	6H4-11634-01	REC6H4-11634-01	6H4-11634-01	REC6H4-11634-01	6H4-11634-01



40N/E/H (1984-1988)
50D/ETN (1984-1988)

	STD Ø 81mm		0.25		0.50	
	REF	OEM	REF	OEM	REF	OEM
	REC6H1-11631-03K	6H1-11631-03-95				
	REC688-11603-A0	688-11603-A0			REC688-11605-A0	688-11605-A0
	REC663-11633-00	663-11633-00				
	REC93603-21111	93603-21111	REC93603-21111	93603-21111	REC93603-21111	93603-21111



55B (1996)
75 TLRB (2003)
75CETO (2004-13)
75AE/T/M/HD (1995-98)
E75B (2000-02)
75AED (2003-07)
75TLR (2000-02)
80A/AETO/AEMTO (1994-02)
85A/AE (1995-02)
90A/AEO/AEMO/AETO/AET/TLR/AETO (1994-13)

	STD Ø 82mm	
	REF	OEM
	REC688-11631-02K	688-11631-02-95
	REC688-11610-02	688-11610-02
	REC663-11633-00	663-11633-00
	REC93603-21111	93603-21111
	REC688-11634-00	688-11634-00



55BET (1990)
55BE (1992)

	STD	
	REF	OEM
	REC688-11631-81K	688-11631-81-96
	REC688-11610-02	688-11610-02
	REC93603-21111	93603-21111



75A/AE (1990-93)
85A/AE (1990-93)

	STD Ø 82mm		0.25		0.50	
	REF	OEM	REF	OEM	REF	OEM
	REC688-11631-03K	688-11631-03-94	REC688-11635-03K	688-11635-03	REC688-11636-03K	688-11635-03
	REC688-11603-A0	688-11603-A0			REC688-11605-A0	688-11605-A0
	REC663-11633-00	663-11633-00	REC663-11633-00	663-11633-00	REC663-11633-00	663-11633-00
	REC93603-21111	93603-21111	REC93603-21111	93603-21111	REC93603-21111	93603-21111
	REC688-11634-00	688-11634-00	REC688-11634-00	688-11634-00	REC688-11634-00	688-11634-00



E48CMHS (2003)
55B/BM/BET (1993-02)
E55CMH (2003-05)
E75B (2000)
85A/AET/AED (2000-03)

	STD Ø 72mm		0.25		0.50	
	REF	OEM	REF	OEM	REF	OEM
	REC6K5-11631-03K	6K5-11631-03-95	REC6K5-11635-03K	6K5-11635-03	REC6K5-11636-03K	6K5-11636-03
	REC6K5-11601-02	6K5-11601-02	REC6K5-11601-12	6K5-11601-12	REC6K5-11601-22	6K5-11601-22
	REC6H3-11633-00	6H3-11633-00	REC6H3-11633-00	6H3-11633-00	REC6H3-11633-00	6H3-11633-00
	REC93603-18M09	93603-18M09	REC93603-18M09	93603-18M09	REC93603-18M09	93603-18M09



E60HE/HM/H/MHZ/MLHA/ELHB/HMHD -S-L (1997-13)

	STD Ø 89mm ESTRIBOR | STD | TRIBORDO | DROIT		STD Ø 89mm BABOR | PORT | BABORDO | GAUCHE	
	REF	OEM	REF	OEM
	REC6R5-11631-11K	6R5-11631-11-93	**REC6R5-11642-11K**	6R5-11642-11-93
	REC6R5-11603-00	6R5-11603-00	**REC6R5-11603-00**	6R5-11603-00
	REC6R5-11633-00	6R5-11633-10		
	REC93310-32337	93310-32337	**REC93310-32337**	93310-32337
	REC6R5-11634-00	6R5-11634-10	**REC6R5-11634-00**	6R5-11634-10



100A/AETO (1996-01)
115B (2000-02)
115CEO/CETO/TLR/TXRZ (1993-13)
130BETO/TLR (1993-07)
150 CETO/L150CETO (1993-95)
175BETO (1993-95)
200CETO (1993)
200BETO (1993-95)
225BET/BETO (1993-95)

	STD Ø 89mm ESTRIBOR | STD | TRIBORDO | DROIT		STD Ø 89mm BABOR | PORT | BABORDO | GAUCHE		0.2590		0.50	
	REF	OEM	REF	OEM	REF	OEM	REF	OEM
	REC6R5-11631-01K	6R5-11631-11-93	**REC6R5-11642-01K**	6R5-11642-11-93				
	REC64D-11603-01	64D-11603-02	**REC64D-11603-01**	64D-11603-02	**REC64D-11604-01**	64D-11603-04	**REC64D-11605-01**	64D-11603-05
	REC6K7-11633-00	6K7-11633-00	**REC6K7-11633-00**	6K7-11633-00				
	REC93310-32337	93603-21111	**REC93310-32337**	93603-21111				
	REC6R5-11634-00	6R5-11634-00	**REC6R5-11634-00**	6R5-11634-00				

115BE/CEO (1992)
E115AEL (2003)
130BETO (1992)
150CETO (1992)
175BETO (1992)
200BETO (1992)



	STD Ø 89mm ESTRIBOR | STD | TRIBORDO | DROIT		STD Ø 89mm BABOR | PORT | BABORDO | GAUCHE	
	REF	OEM	REF	OEM
	REC6G5-11631-00K	6G5-11631-00-93	**REC6G5-11642-00K**	6G5-11642-00-93
	REC6E5-11610-02	6E5-11610-02	**REC6E5-11610-02**	6E5-11610-02
	REC6E5-11633-00	6E5-11633-01	**REC6E5-11633-00**	6E5-11633-01
	REC93603-21111	93603-21111	**REC93603-21111**	93603-21111
	REC6E5-11634-00	6E5-11634-00	**REC6E5-11634-00**	6E5-11634-00



115ETN (1984)
115A (1985-87)
140AETO (1984-87)
150ETN (1984)
150AETO (1985-87)
175AETO (1984-87)
200ETN (1984)
200AETO (1985-87)

	STD Ø 89mm ESTRIBOR | STD | TRIBORDO | DROIT		STD Ø 89mm BABOR | PORT | BABORDO | GAUCHE	
	REF	OEM	REF	OEM
	REC64D-11631-00K	64D-11631-02-90	**REC64D-11642-00K**	64D-11642-02-90
	REC64D-11603-01	64D-11603-02	**REC64D-11603-01**	64D-11603-02
	REC6R5-11633-00	6R5-11633-10	**REC6R5-11633-00**	6R5-11633-10
	REC93310-32337	93310-32337	**REC93310-32337**	93310-32337
	REC6R5-11634-00	6R5-11634-10	**REC6R5-11634-00**	6R5-11634-10



150F/FETO (1996-2007)
150TXR/TR (2002-05)
150AET (2001-02)
175D/DETO (1996-03)
200AET (2003)
200F/TLR/FETO (1996-10)
200G/GETOL (1996-02)
L200F/FETO (1996-00)
225D/DET (1996-09)

GUÍA DE PISTONES Y SEGMENTOS — GUIDE PISTON & RING — GUIDA PISTONE E FASCE — GUIDE PISTONS ET SEGMENTS

			ESTRIBOR | STD TRIBORDO | DROIT	BABOR | PORT BABORDO | GAUCHE
4A	1985-87	REC6G1-11610-00	REC6E0-11631-00-98K	
4AC	1987-99	REC6G1-11610-00	REC6E0-11631-00-98K	
4ACMHL/HS	2001-03	REC6G1-11610-00	REC6E0-11631-00-98K	
4AS	1987-96	REC6G1-11610-00	REC6E0-11631-00-98K	
4BC	1998	REC6G1-11610-00	REC6E0-11631-00-98K	
4BCMHL/HS	2001-03	REC6G1-11610-00	REC6E0-11631-00-98K	
5C	1994-98	REC6G1-11610-00	REC6E0-11631-00-98K	
5CMHL/HS	2001-03	REC6G1-11610-00	REC6E0-11631-00-98K	
5CS	1994-96	REC6G1-11610-00	REC6E0-11631-00-98K	
6C	1984-96	REC6G1-11610-00		
6CMHL/HS	2002	REC6G1-11610-00		
6D	1984-96	REC6G1-11610-00		
6DMHL/HS	2002	REC6G1-11610-00		
8C	1984-96	REC6G1-11610-00		
8CMHL/HS	2002	REC6G1-11610-00		
8CMHX	2002	REC6G1-11610-00		
8CWHL	2002	REC6G1-11610-00		
8CWHS	2002	REC6G1-11610-00		
E8D	1997-98	REC647-11610-00	REC677-11631-00K	
E8DMH	1999	REC689-11610-00	REC677-11631-00K	
9.9D	1985	REC682-11610-01	REC6E7-11631-00K	
9.9FEMHW	1995-13	REC682-11610-01	REC6E7-11631-00K	
13.5/15 FEMHW LBC	1995-13	REC682-11610-01	REC6E7-11631-00K	
15D	1985-95	REC682-11610-01	REC6E7-11631-00K	
25B/BETO	1994-95	REC6K5-11601-02	REC6H3-11631-01K	
25BMHL/HS	2001-10	REC61N-11603-00	REC61N-11631-00K	
25J	1990-00		REC6J8-11631-02	
25Q	1990-94		REC6H4-11631-01K	
25VE/VM	1996-01	REC61N-11603-00	REC61N-11631-00K	
25BMHL/HM	2001-12	REC61N-11603-00	REC61N-11631-00K	
25BMHS/WC	2001-12	REC61N-11603-00	REC61N-11631-00K	
C25 MHV2	1997-98	REC61N-11603-00	REC61N-11631-00K	
30A	1984-85	REC689-11610-00	REC689-11631-00K	
30AM	1990-92	REC689-11610-00	REC689-11631-00K	
30D	1990-02		REC6J8-11631-02	
30DEOL -EL	2001-10		REC6J8-11631-02	
30DEOS	2001-10		REC6J8-11631-02	
30DEOT -DETOL	2001-10		REC6J8-11631-02	
30DMHOL	2001-14		REC6J8-11631-02	
30DMHOS	2001-10		REC6J8-11631-02	
E30HMH	2003	REC61N-11603-00	REC61N-11631-00K	
30G/GE	1996-97	REC61N-11603-00	REC61N-11631-00K	
30 HM/WH	2003	REC61N-11603-00	REC61N-11631-00K	
30 HM/W	2010-12	REC61N-11603-00	REC61N-11631-00K	
C30	1993-97	REC61N-11603-00	REC61N-11631-00K	
40H	1984-88	REC6H4-11610-00-00	REC6H4-11631-00K	
40H	1989-94		REC6H4-11631-01K	
40RMHO	2000	REC6H4-11610-00-00	REC6H4-11631-01K	
40RROS	2001	REC6H4-11610-00-00	REC6H4-11631-01K	
40V	1995-98	REC6H4-11610-00-00	REC6H4-11631-01K	
40VEO	2000	REC6H4-11610-00-00	REC6H4-11631-01K	
40VEOL/OS	2001-06	REC6H4-11610-00-00	REC6H4-11631-01K	
40VETO	2000	REC6H4-11610-00-00	REC6H4-11631-01K	
40VETOL	2001-06	REC6H4-11610-00-00	REC6H4-11631-01K	
40VETOS	2001-3	REC6H4-11610-00-00	REC6H4-11631-01K	
40VMHOL/OS	2001-06	REC6H4-11610-00-00	REC6H4-11631-01K	
40VMO	2000	REC6H4-11610-00-00	REC6H4-11631-01K	
40VMOS	2002	REC6H4-11610-00-00	REC6H4-11631-01K	
40X	1998	REC66T-11603-00	REC66T-11631-01K	
40XMH	2000	REC66T-11603-00	REC66T-11631-01K	
40XMHL	2001-06	REC66T-11603-00	REC66T-11631-01K	
40XMHS	2001-02	REC66T-11603-00	REC66T-11631-01K	
40XW	2000	REC66T-11603-00	REC66T-11631-01K	
40XWL/WS	2001	REC66T-11603-00	REC66T-11631-01K	
40XWT	2000	REC66T-11603-00	REC66T-11631-01K	
40XWTL	2001-03	REC66T-11603-00	REC66T-11631-01K	
40YETOL/YMHOS	2001-04	REC6H4-11610-00-00	REC6H4-11631-01K	
50D	1984-89	REC6H4-11610-00-00	REC6H4-11631-01K	
50D	1989-94		REC6H4-11631-01K	
50G/EO	1993-00	REC6K5-11601-02	REC6H3-11631-01K	
50GETO	2000	REC6K5-11601-02	REC6H3-11631-01K	
50GETOL	2001-07	REC6K5-11601-02	REC6H3-11631-01K	
50H	1995-98	REC6H4-11610-00-00	REC6H4-11631-01K	
50HEDO	2000	REC6H4-11610-00-00	REC6H4-11631-01K	
50HEDOL/OS	2001-02	REC6H4-11610-00-00	REC6H4-11631-01K	
50HMDO	2000	REC6H4-11610-00-00	REC6H4-11631-01K	
55B	1993-02	REC688-11603-A0	REC6H1-11631-03K	
55BE	1990-92	REC688-11610-02	REC688-11631-02K	
55BE	2000	REC688-11603-A0	REC688-11631-02K	
55BEHD/BET	2000	REC688-11603-A0	REC688-11631-02K	
55BETL	2001-02	REC688-11603-A0	REC688-11631-02K	
60F	1990-02	REC6K5-11601-02	REC6H3-11631-01K	
60FEO	1991-00	REC6K5-11601-02	REC6H3-11631-01K	
60FETO	2000-06	REC6K5-11601-02	REC6H3-11631-01K	
60FETOL	2001-07	REC6K5-11601-02	REC6H3-11631-01K	
E60/HM/HDL	2001-06	REC6K5-11601-02	REC6K5-11631-03K	
70B	1990-02	REC6K5-11601-02	REC6H3-11631-01K	
70BEDOL	2001-03	REC6K5-11601-02	REC6H3-11631-01K	
70BEO	1991-00	REC6K5-11601-02	REC6H3-11631-01K	
70BETO	1998-13	REC6K5-11601-02	REC6H3-11631-01K	
70BETOL	2001-13	REC6K5-11601-02	REC6H3-11631-01K	
75A	1993-94	REC688-11610-02	REC688-11631-81K	
75AET	2000	REC688-11603-A0	REC6H1-11631-03K	
75AETL	2001-06	REC688-11603-A0	REC6H1-11631-03K	
75AMHD	2000	REC688-11603-A0	REC6H1-11631-03K	
75C	1998	REC688-11603-A0	REC6H1-11631-03K	
75CETO	2000	REC688-11603-A0	REC6H1-11631-03K	
75CETOL	2001-06	REC688-11603-A0	REC6H1-11631-03K	
80A	1994-96	REC688-11603-A0	REC6H1-11631-03K	
85A	1990-94	REC688-11610-02	REC688-11631-81K	
85A	1995-98	REC688-11603-A0	REC6H1-11631-03K	
85AE	1990-92	REC688-11610-02	REC688-11631-81K	
85AE/AET	2000	REC688-11603-A0	REC6H1-11631-03K	
85AETL	2001-02	REC688-11603-A0	REC6H1-11631-03K	
90A	1994-98	REC688-11603-A0	REC6H1-11631-03K	
90AETO	2000	REC688-11603-A0	REC6H1-11631-03K	
90AETOL	2001-06	REC688-11603-A0	REC6H1-11631-03K	
100A	1997-98	REC64D-11603-01	REC6R5-11631-11K	REC6R5-11642-11K
100AETO	2000	REC64D-11603-01	REC6R5-11631-11K	REC6R5-11642-11K
100AETOL	2001	REC64D-11603-01	REC6R5-11631-11K	REC6R5-11642-11K
115A	1984-87	REC6E5-11610-02	REC6G5-11631-00K	REC6G5-11642-00K
115B	1992	REC61U-11601-00	REC6R5-11631-01K	REC6R5-11642-01K
115B	1993-96	REC6R5-11603-00	REC6R5-11631-11K	REC6R5-11642-11K
115BETO	1997-00	REC64D-11603-01	REC6R5-11631-11K	REC6R5-11642-11K
115BETOL	2001-02	REC64D-11603-01	REC6R5-11631-11K	REC6R5-11642-11K
115C	1992	REC64D-11603-01	REC6R5-11631-11K	REC6R5-11642-11K
115C	1993-96	REC6R5-11603-00	REC6R5-11631-11K	REC6R5-11642-11K
115C	1997-98	REC64D-11603-01	REC6R5-11631-11K	REC6R5-11642-11K
115CETO	2000	REC64D-11603-01	REC6R5-11631-11K	REC6R5-11642-11K
115CETOL	2001-06	REC64D-11603-01	REC6R5-11631-11K	REC6R5-11642-11K
115CETOX	2001	REC64D-11603-01	REC6R5-11631-11K	REC6R5-11642-11K
E115AWEL	2003-06	REC64D-11603-01	REC6R5-11631-01K	REC6R5-11642-01K
130B	1992	REC64D-11603-01	REC6R5-11631-11K	REC6R5-11642-11K
130B	1993-96	REC6R5-11603-00	REC6R5-11631-11K	REC6R5-11642-11K
130B	1997-98	REC64D-11603-01	REC6R5-11631-11K	REC6R5-11642-11K
130BETO	2000	REC64D-11603-01	REC6R5-11631-11K	REC6R5-11642-11K
130BETOL	2001-06	REC64D-11603-01	REC6R5-11631-11K	REC6R5-11642-11K
130BETOX	2001	REC64D-11603-01	REC6R5-11631-11K	REC6R5-11642-11K
L130B	1992	REC61U-11601-00	REC6R5-11631-01K	REC6R5-11642-01K
L130B	1993	REC6R5-11603-00	REC6R5-11631-11K	REC6R5-11642-11K

			ESTRIBOR | STD TRIBORDO | DROIT	BABOR | PORT BABORDO | GAUCHE
L130B	1997-98	REC64D-11603-01	REC6R5-11631-11K	REC6R5-11642-11K
L130BETOX	2000-01	REC64D-11603-01	REC6R5-11631-11K	REC6R5-11642-11K
140A	1985-87	REC6E5-11610-02	REC6G5-11631-00K	REC6G5-11642-00K
150A	1984-87	REC6E5-11610-02	REC6G5-11631-00K	REC6G5-11642-00K
150AET	1998-00	REC64D-11603-01	REC64D-11631-00K	
150AETL/ AETX	2001-02	REC64D-11603-01	REC64D-11642-00K	
150C	1992	REC61U-11601-00	REC6R5-11631-01K	REC6R5-11642-01K
150C	1993-05	REC6R5-11603-00	REC6R5-11631-11K	REC6R5-11642-11K
150F	1996-01	REC64D-11603-01	REC6G5-11631-00K	REC6G5-11642-00K
150FETO	1998-00	REC64D-11603-01	REC64D-11631-00K	REC64D-11642-00K
150FETOL	2001-04	REC64D-11603-01	REC64D-11631-00K	REC64D-11642-00K
150FETOX	2001-05	REC64D-11603-01	REC64D-11631-00K	REC64D-11642-00K
D150H	1999-02	REC64D-11603-01	REC64D-11631-00K	REC64D-11642-00K
L150C	1992	REC61U-11601-00	REC6R5-11631-01K	REC6R5-11642-01K
L 150C	1993-95	REC6R5-11603-00	REC6R5-11631-11K	REC6R5-11642-11K
L150F	1996-98	REC64D-11603-01	REC6G5-11631-00K	REC6G5-11642-00K
L150FETO	2000	REC64D-11603-01	REC64D-11631-00K	REC64D-11642-00K
L150FETOL/ FETOX	2001	REC64D-11603-01	REC64D-11642-00K	REC64D-11642-00K
175A	1984-87	REC6E5-11610-02	REC6G5-11631-00K	REC6G5-11642-00K
175B	1992	REC61U-11601-00	REC6R5-11631-01K	REC6R5-11642-01K
175BETO/ CETO	1993-95	REC6R5-11603-00	REC6R5-11631-11K	REC6R5-11642-11K
175D	1996-98	REC64D-11603-01	REC6G5-11631-00K	REC6G5-11642-00K
175DETO	1996-00	REC64D-11603-01	REC64D-11631-00K	
175DETOL	2001-03	REC64D-11603-01	REC64D-11642-00K	
175DETOX	2001-02	REC64D-11603-01	REC64D-11642-00K	
200A	1984-87	REC6E5-11610-02	REC6G5-11631-00K	REC6G5-11642-00K
200B	1992	REC64D-11603-01	REC6R5-11631-01K	REC6R5-11642-01K
200B	1993-95	REC6R5-11603-00	REC6R5-11631-11K	REC6R5-11642-11K
200F	1996-98	REC64D-11603-01	REC6G5-11631-00K	REC6G5-11642-00K
200FETO	2000	REC64D-11603-01	REC64D-11631-00K	REC64D-11642-00K
200FETOL/F	2001-04	REC64D-11603-01	REC64D-11631-00K	REC64D-11642-00K

			ESTRIBOR | STD TRIBORDO | DROIT	BABOR | PORT BABORDO | GAUCHE
200G	1999	REC64D-11603-01	REC64D-11631-00K	REC64D-11642-00K
200GETO	2000	REC64D-11603-01	REC64D-11631-00K	REC64D-11642-00K
200GETOL	2001-03	REC64D-11603-01	REC64D-11631-00K	REC64D-11642-00K
L200B	1992	REC6R5-11603-00	REC6R5-11631-01K	REC6R5-11642-01K
L 200B	1993-95	REC6R5-11603-00	REC6R5-11631-11K	REC6R5-11642-11K
L200F	1996-01	REC64D-11603-01	REC6G5-11631-00K	REC6G5-11642-00K
L200FETO	1996-00	REC64D-11603-01	REC64D-11631-00K	REC64D-11642-00K
200FETOL	2001-04	REC64D-11603-01	REC64D-11631-00K	REC64D-11642-00K
220A, ET, O	1985-87	REC6E5-11610-02		
225B	1993-95	REC6R5-11603-00	REC6R5-11631-11K	REC6R5-11642-11K
225D	1996-01	REC64D-11603-01	REC6G5-11631-00K	REC6G5-11642-00K
225DETO	1996-00	REC64D-11603-01	REC64D-11631-00K	REC64D-11642-00K
225G	1999	REC64D-11603-01	REC64D-11631-00K	REC64D-11642-00K
225GETO	1999-00	REC64D-11603-01	REC64D-11631-00K	REC64D-11642-00K
225GETOL	2001-03	REC64D-11603-01	REC64D-11631-00K	REC64D-11642-00K
L225C	1994-95	REC6R5-11603-00	REC69L-11631-00K	REC69L-11642-00
250A	1993-95	REC6R5-11603-00	REC69L-11631-00K	REC69L-11642-00
250AETO	2000	REC64D-11603-01	REC69L-11631-00K	REC69L-11642-00
250AETOX	2001-04	REC64D-11603-01	REC69L-11631-00K	REC69L-11642-00
250B	1997-98	REC64D-11603-01	REC69L-11631-00K	REC69L-11642-00
250BETO	2000	REC64D-11603-01	REC69L-11631-00K	REC69L-11642-00
250BETOX	2001	REC64D-11603-01	REC69L-11631-00K	REC69L-11642-00
L250AETO	2000-05	REC64D-11603-01	REC69L-11631-00K	REC69L-11642-00
L250AETOX	2001-06	REC64D-11603-01	REC69L-11631-00K	REC69L-11642-00
L250B	1997-02	REC64D-11603-01	REC69L-11631-00K	REC69L-11642-00
L250BETO	2000-03	REC64D-11603-01	REC69L-11631-00K	REC69L-11642-00
L250BETOX	2001-03	REC64D-11603-01	REC69L-11631-00K	REC69L-11642-00
L250GETOX	2006-10	REC64D-11603-01	REC69L-11631-00K	REC69L-11642-00
L250 A	1997-98	REC64D-11603-01	REC69L-11631-00K	REC69L-11642-00



GUÍA CORREAS DE DISTRIBUCIÓN — GUIDE TIMIMG BELT — GUIDA CINGHIE DISTRIBUZIONE — GUIDE DES COURROIES DE DISTRIBUTION

			REF	OEM
F6A-04/ F6A-05/ F8C-04/ F8C-05/ FT8D-04/ FT8D-05/ F9.9F/ F9.9J/ FT9.9G/ FT9.9L	2000+	60	REC68T-46241-00	68T-46241-00
F8B/ FT9.9A/ F9.9B	1985-06	64	REC6G8-46241-00	6G8-46241-00
F9.9C/ FT9.9D/ F15A	1998-08	68	REC66M-46241-00	66M-46241-00
F15C/ F20B	2007+	80	PAF20-05000003	6AH-46241-00
F20A/ F25A/ FT25B/ F30A/ F40B/ F45A	1998-09	80	REC65W-46241-00	65W-46241-00
F40A/ F50A/ FT50B/ FT50C/ F60A/ FT60B	1995+	106	REC62Y-46241-00	62Y-46241-00
F25D/ FT25F/ F30B/ F40F/ F50F/ FT50G/ FT50J/ F50H/ F60C/ F60F/ FT60D/ FT60G/ F70A	2005+	94	REC6C5-46241-00	6C5-46241-00
F80A/ F80B/ F100A/ F100B/ F100D/ F100F(L)/ F115A	1999+	135	REC67F-46241-00	67F-46241-00
F(L) 150A	2004+	147	REC63P-46241-00	63P-46241-00
F(L) 200A/ F(L) 225A	2002-11	159	REC69J-46241-00	69J-46241-00
F(L) 200C/ F(L) 225B/ F225C/ F(L) 250A/ F(L) 250B	2005+	225	REC6P2-46241-02	6P2-46241-02

SISTEMA DE ESCAPE Y ADMISIÓN
EXHAUST & INTAKE SYSTEM
SISTEMA DI SCARICO E ASPIRAZIONE
SYSTEME D'ECHAPPEMENT ET D'ADMISSION

SISTEMA DE ESCAPE | EXHAUST SYSTEM | SISTEMA SCARICO | SYSTÈME D'ECHAPPEMENT

JUNTAS DEL SISTEMA DE ESCAPE | EXHAUST GASKETS | GUARNIZIONE SCARICO | JOINTS D'ECHAPPEMENT

REF	OEM
REC6G1-41133-A0	6G1-41133-A0

6C/CEM/D/DEM/TRV/MSH/MHS/CWH/DMH/J
8CEM/C/TRV/MSH/MH/CMH/J/N



REF	OEM
PAF15-04010004	66M-41138-00

F9.9/15/13.5
T9.9



REF	OEM
PAF15-03000003	66M-45115-00

F9.9/13.5/15
T9.9



REF	OEM
REC682-41133-A0	682-41133-A0

9.9D
E9.9DMH
15D
E15DMH



REF	OEM
REC63V-41133-A1	63V-41133-A1

9.9F/FEM/FMH/MH/AW/MSH
13.5AWH

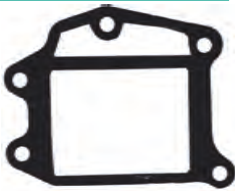

REF	OEM
REC6L2-41133-A3	6L2-41133-A3

20D/DEM/DEO/MLH/DMH
25NE/NW/MLH/N/MSH/MH/MLH



REF	OEM
REC6L2-41134-00	6L2-41134-00

20D/DEM/DEO/MLH/DMH
25NE/NW/MLH/N/MSH/MH/MLH



REF	OEM
PAF25-05080004	65W-14457-10

F20/25
T25



REF	OEM
REC62Y-45127-00	62Y-45127-00

F20/25/40/45/50
T50



REF	OEM
REC62Y-41133-00	62Y-41113-00

F20/25/40/45/50
T50



REF	OEM
REC67C-41133-00	67C-41133-00

F20/25/40/50/30
T25



REF	OEM
REC67C-45123-00	67C-45123-00

F20/25/40/50/30
T25



REF	OEM
REC663-45123-00	663-45123-00

25QEO
40H/N
F40/45/50
50ETN
T50
55B
E55CM



REF	OEM
REC664-41134-A0	664-41134-A0

20C/CM/A/G/GE
E25A/25VE/VM/DE/D

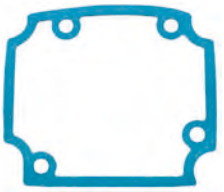

YAMAHA

RECAMBIOS MARINOS

REF	OEM
REC63D-45123-00	63D-45123-00

25AEO/50H/40V/YE
C40M/40TLR/50DE



REF	OEM
REC6H3-45127-00	6H3-45127-00

25B/BETO
50G/GEO/GETO
60FE/FET/FEO/FETO/FEDO
E60H/MHZ/MLH/HMH/HW



REF	OEM
REC6H3-45123-00	6H3-45123-00

25B/BETO
50G/GEO/GETO
60FE/FET/FEO/FETO/FEDO
E60H/MHZ/MLH/HMH/HW
70B/ETN/
BEH/BEO/BEMO/BETO/CE



REF	OEM
REC6H4-41134-A0	6H4-41134-A0

25QEO/50H/40V/YE
C40M/40TLR/50DE

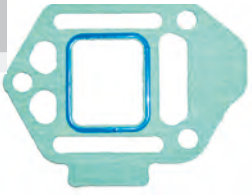

REF	OEM
REC66T-41133-A1	66T-41133-A0

40X/XW/XMH
E40X/MLN



REF	OEM
REC676-41133-A0	676-41133-A0

40QE/QE-Z/QM/QWC

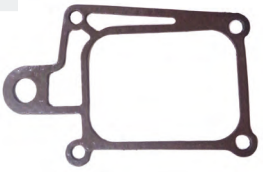

REF	OEM
REC676-45128-00	676-45128-00

40QE/QE-Z/QM/QWC

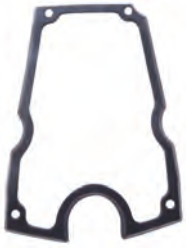

REF	OEM
REC676-45127-00	676-45127-00

40QE/QE-Z/QM/QWC



REF	OEM
REC688-41134-00	688-41134-A0

75A/AE/AED/CETO/TLR
80A/AEO
85A/AED-T
90A/AET/AEO



REF	OEM
REC688-45123-00	688-45123-00

75CETO/TLR
E75B/AED
80A/AE/TLR
85A/AE
90A/AE/TLR/TR



REF	OEM
REC67F-41138-00	67F-41138-00

F80/100/115



REF	OEM
REC67F-45127-00	67F-45127-00

F80/100/115



REF	OEM
REC67F-45123-00	67F-45123-00

F75/80/100



REF	OEM
REC67F-41134-A0	67F-41134-A0

F80/100/115

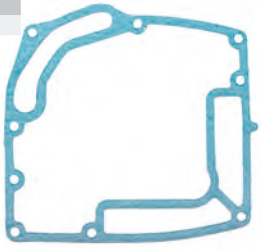

REF	OEM
REC68V-45123-00	68V-45123-00

F80/100/115



REF	OEM
REC6E5-41135-A0	6E5-41135-A0

100A/AET/TLR
115B/BETO/CEO/CETO/TXR
130BETO

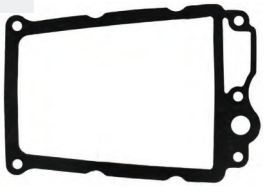

REF	OEM
REC6E5-41134-A0	6E5-41134-A0

100A/AET/TLR
115B/BETO/CEO/CETO/TXR, 130BETO



REF	OEM
REC6G5-41134-A1	6G5-41134-A1

130BETO
150FETO/PETO/TR
175DETO/GETO/TR
Z200
200AET/ FETO/NETO/TXR
225DET



REF	OEM
REC69J-41138-00	69J-41138-00

F200/225/250



REF	OEM
REC69J-45123-00	69J-45123-00

F200/225/250



REF	OEM
REC69J-41135-A0	69J-41135-A0

F200/225/250

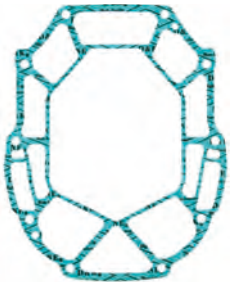

REF	OEM
REC69J-41134-A0	69J-41134-A0

F200/225

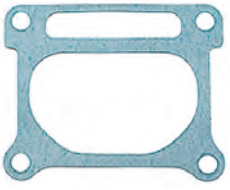

REF	OEM
REC6S1-41136-00	6S1-41136-00

F200/225/250

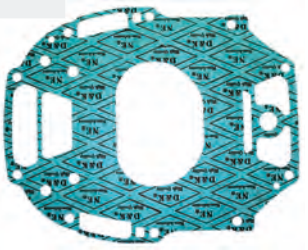

REF	OEM
REC6AW-41134-01	6AW-41134-00

FL/F300-350 (2008+)



new

REF	OEM
REC6A1-14613-A0	6A1-14613-A0, 00, 01

2B/C/M (1985-10)
2T/strokes

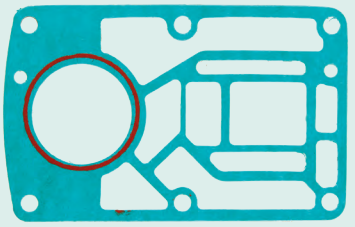

new

REF	OEM
REC93101-13M27	93101-13M27

E9.9/E15
F9.9/F15 (modelos antiguos | old models | modello vecchio | anciens)



JUNTAS DE COLECTOR Y CARTER — GASKET, UPPERCASING, OIL PAN, MANIFOLD

REF	OEM
REC646-14623-A1	646-14623-A1

2B

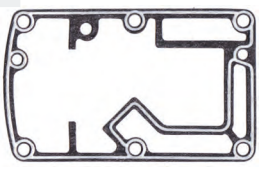

REF	OEM
PAF2.6-04000004	69M-11351-A0

F2.5

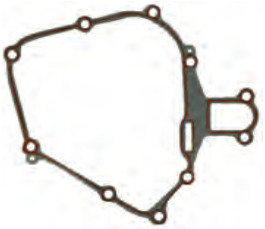

GUARNIZIONI COLLETTORE E CARTER — JOINTS DE COLLECTEUR ET CARTER D'HUILE

REF	OEM
PAF4-04000002	68D-11351-A0

F4



REF	OEM
REC68T-13475-00	68T-13475-00

F6/8/9.9
T8/9.9

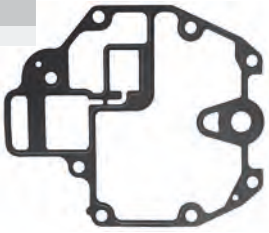

REF	OEM
REC67C-15312-00	67C-15312-00

F25/30/40
T25

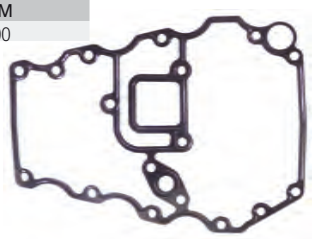

REF	OEM
REC6G8-45113-A1	6G8-45113-A1

F8/9.9
T9.9



REF	OEM
REC67C-45113-00	67C-45113-00

F25/30/40
T25

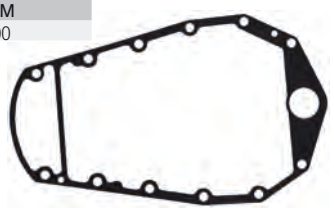

REF	OEM
REC6AH-13329-00	6AH-13329-00

F9.9/13.5/15/20



REF	OEM
REC6H3-45114-A1	6H3-45114-A1

25B/BETO
50G/GEO/GETO
60FEDO/TLR/BEO
E60H/MLHHMH
70B/BEO
70BETO/TR

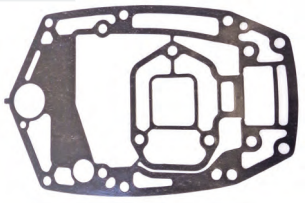

REF	OEM
REC682-45113-A0	682-45113-02

9.9D
15D



REF	OEM
PAF25-02010007	67C-15312-00

F25/30/40
T25



REF	OEM
REC6AH-15312-00	6AH-15312-00

F9.9/13.5/15/20

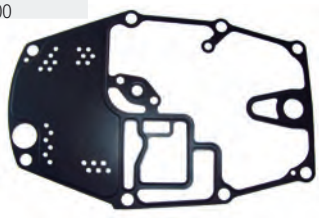

REF	OEM
REC676-45114-A1	676-45114-A1

40QE/QE-Z/QM/QWC/GWH/JWH
E40GMH/JMH



REF	OEM
PAF15-00000005	66M-45113-00

F15/9.9/13.5
FT9.9

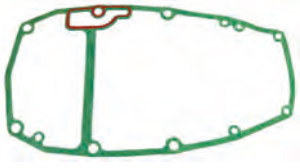

REF	OEM
REC66T-45114-A0	66T-45114-A0

40X/XMH/XW
E40X/MLH/XMH

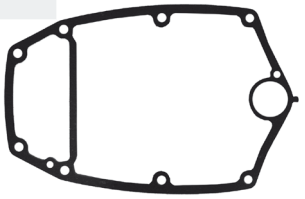

REF	OEM
REC62Y-15312-00	62Y-15312-00

F20/25/40/45/50
T50

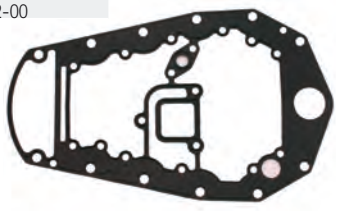

REF	OEM
REC697-45114-00	697-45114-A0

E48CMH
55BET/B/BE/BM
E55CMH

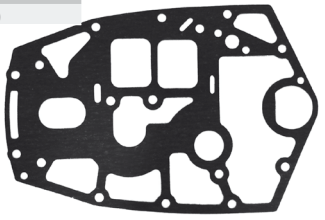

REF	OEM
REC63D-45114-A0	63D-45114-A0

50H/HR/HM
40V/ VM/VETO/C40MLH
C40T/TLR
40YETO



REF	OEM
REC63P-15312-00	63P-15312-00

F150/175/200



REF	OEM
REC688-45114-A1	688-45114-A1

75A/AE/CETO/TLR/AED
E75B
85A/AED-M-T
80A/AE/AEO
90A/ETN/AEO/AETO

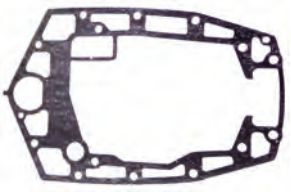

REF	OEM
REC61A-41134-A0	6D0-41134-00

225C/FETO/G/GETO
Z250
250B/AET/BETO/TXR
Z300/AETO/TR

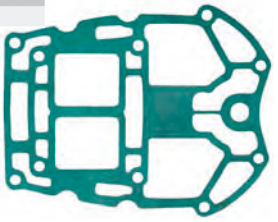

REF	OEM
REC67F-45113-00	67F-45113-00

F75/80/100/115

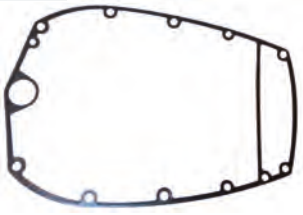

REF	OEM
REC6AW-45113-00	6AW-45113-00

F300/350

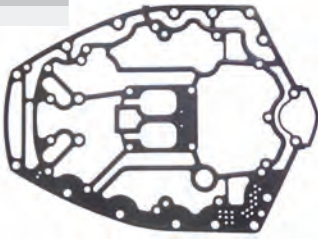

REF	OEM
REC68V-15312-00	68V-15312-00

F80/100/115

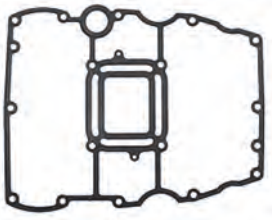

REF	OEM
REC6AW-15312-00	6AW-15312-00

FL/F300-350 (2008+)



REF	OEM
REC6G5-45114-A0	6G5-45114-A1

115A/B/ETN/BETO
130BETO
140AETO/BETO
150ETN/AETO/CETO/FETO
Z150
Z175
175AETO
200ETN/AET-0
Z200
225AETO/DET

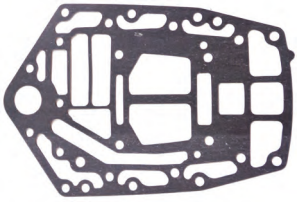

REF	OEM
REC6AW-15451-00	6AW-15451-00

FL/F300-350 (2008+)

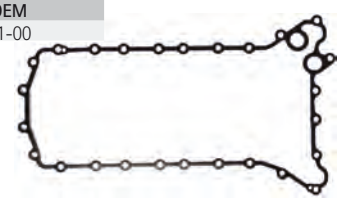

REF	OEM
REC6AW-14613-00	6AW-14613-00

FL/F300-350 (2008-11)



REF	OEM
REC6E5-45114-00	6E5-45114-A0

115A/ETN
E115AEL
140AETO

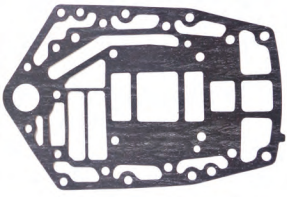

REF	OEM
REC6AW-14623-00	6AW-14623-00

FL/F300-350 (2008-11)



JUNTAS DEL SISTEMA DE ADMISIÓN | GASKETS INTAKE | GUARNIZIONE SISTEMA ASPIRAZIONE | JOINTS D'ADMISSION

REF	OEM
REC69J-13645-00	69J-13645-A1

F200/FL-LF200 (2002-11)
F225/LF-FL225 (2002-11)



REF	OEM
REC69J-15451-00	69J-15451-A1

F200/FL-LF200 (2002-11)
F225/LF-FL225 (2002-11)

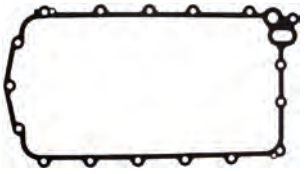

REF	OEM
REC6G1-13645-A1	6G1-13645-A1

6D/DMH/CMH//MH/C/TRV
8C/CMH/MH/MSH



REF	OEM
REC6G1-14198-A1	6G1-14198-A1

6D/DMH/CMH//MH/C/TRV
8C/CMH/MH/MSH



REF	OEM
REC6G1-13621-A1	6G1-13621-A1

6D/DMH/CMH//MH/C/TRV
8C/CMH/MH/MSH



REF	OEM
REC6G8-14198-A0	6G8-14198-00

F8BE/BM/B
F9.9B/BE/BM/A/AM



REF	OEM
REC6G8-13645-00	6G8-13645-00

F8BE/BM/B
F9.9B/BE/BM/A/AM



REF	OEM
REC6G8-13646-A0	6G8-13646-00

F8BE/BM/B
F9.9B/BE/BM/A/AM



REF	OEM
REC6G8-15374-00	6G8-15374-00

F8BE/BM/B
F9.9B/BE/BM/A/AM



REF	OEM
REC677-24434-02	677-24434-02

E8D/DMH
9.9D/15D
25D/NH/NMH/MH/NE/NEMO
20DMH/MLH/DW

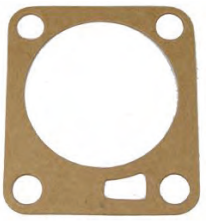

REF	OEM
REC677-13621-00	677-13621-A1

20CM/C
25DE/BMH/B/D/V
30A/HM/HW/G/GE
E30HMH



REF	OEM
REC677-14198-A1	677-14198-A1

20CM/C
25DE/BMH/B/D/V
30A/HM/HW/G/GE
E30HMH



REF	OEM
REC682-13621-00	682-13621-A0

9.9D
15D



REF	OEM
REC648-13645-A0	648-13645-A0

20CM/C
25DE/BMH/B/D/V
30A/HM/HW/G/GE, E30HMH



REF	OEM
REC648-13621-A0	648-13621-A1

20CM/C
25DE/BMH/B/D/V
30A/HM/HW/G/GE
E30HMH

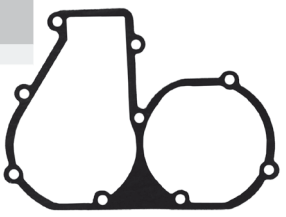

YAMAHA

RECAMBIOS MARINOS

REF	OEM
REC648-14198-A0	648-14198-A0

20C/CM
25D/DE
30A



REF	OEM
REC6H4-14198-01	6H4-14198-01

25Q/QEO/B
50D/G/GEO/GET/H
40V/VM/TLR/H
C40T/40YET
60FEO/FET/D
70B/BE



new

REF	OEM
REC6L2-13621-00	6L2-13621-00

25N/M 6L2-6L29, 6L2A - 6L2D
(1988-13)

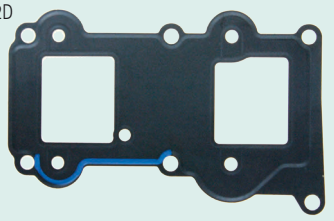

REF	OEM
REC61N-14198-00	61N-14198-00

25VE/VM/B/BMH/BWH
E25A/BMH
30G/GE/HMH/HW
E30HMH



REF	OEM
REC6H3-13621-A1	6H3-13621-A1

25B
50G/GEO/GETO,
60FEO/FETO/TLR/TRZ/F
E60H/E60M
70BEO/B/BE/
BEDO/BETO/TR



REF	OEM
REC6H3-14198-A1	6H3-14198-A1

25B
50G/GEO/GETO
60FEO/FETO/TLR/TRZ/F
E60H/E60M
70BEO/B/BE/
BEDO/BETO/TR



REF	OEM
REC6H3-13622-A1	6H3-13622-A1

25B
50G/GEO/GETO
60FEO/FETO/TLR/TRZ/F
E60H/E60M
70BEO/B/BE/BEDO/BETO/TR



REF	OEM
REC6H4-14198-09	6H4-14198-00

40N/H/E
50D/ETN



REF	OEM
REC676-13646-A0	676-13646-A0

40QE/QM/QWC



REF	OEM
REC688-14483-A0	688-14483-A0

E40CMH
55B/BE/BET
E55CMH



REF	OEM
REC688-14416-01	688-14416-01

75AET/AEM/AED
E75B
85A/AE/AET/AED

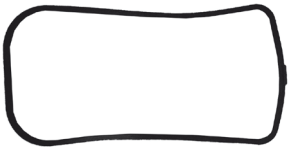

REF	OEM
REC688-13621-A1	688-13621-A1

75AET/AEM/AED
E75B
85A/AE/AET/AED



REF	OEM
REC688-14198-A1	688-14198-A2

Z150P/Q/TLR
175G/GET
200NETO/N/TR/PET
250G/GET/B

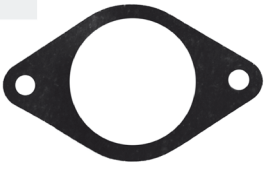

REF	OEM
REC6F5-13645-A0	6F5-13645-A1

40GWH/JWH
E40GMH/JMH



REF	OEM
REC6F5-13646-A2	6F5-13646-A1

40GWH/JWH
E40GMH/JMH



REF	OEM
REC6F5-13621-A1	6F5-13621-A1

40GWH/JWH
E40GMH/JMH



REF	OEM
REC6F5-14198-A1	6F5-14198-A1

40GWH/JWH
E40GMH/JMH



REF	OEM
REC6E9-14198-A0	6E9-14198-A0

40QE/QM/QWC



REF	OEM
REC663-14483-A0	663-14483-A0

E40CMH
55B/BE/BET
E55CMH



REF	OEM
REC663-14198-00	663-14198-A0

E48CMHS
55BET/B/BE/BM



REF	OEM
REC663-13621-00	663-13621-A0

E48CMHS
55BET/B/BE/BM



REF	OEM
REC6E5-13645-A1-00	6E5-13645-A1

100A/TLR
115BE/B/CETO/TXR
130BETO/TLR
150F/FETO/TXR/TR/GETO/A/AETO
175DETO/D/FETO
225DET/D

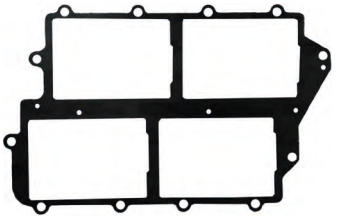

REF	OEM
REC6E5-13621-A1	6E5-13621-A1

100A/TLR
115BE/B/CETO/TXR
130BETO/TLR
150F/FETO/TXR/TR/GETO/A/AETO
175DETO/D/FETO
225DET/D



REF	OEM
REC6E5-14198-A2	6E5-14198-A2

100A/TLR
115BE/B/CETO/TXR
130BETO/TLR
150F/FETO/TXR/TR/GETO/A/AETO
175DETO/D/FETO
225DET/D



REF	OEM
REC6E5-14416-A1	6E5-14416-A1

115B/BE/BET
C115TLR



REF	OEM
REC6E5-11381-A1	6E5-11381-A1

115BET/CEO
130BET
150CET
175BET
200CETO
225BET



REF	OEM
REC6E5-14483-A1	6E5-14483-A1

115B/BE/BET
C115TLR

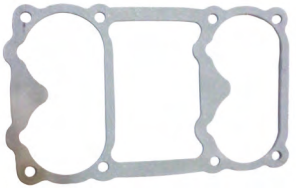

REF	OEM
REC65L-13646-00	65L-13646-00

150PETO/QETO/TXR
175GETO
200N/NETO/PET/TLR
225G/GET

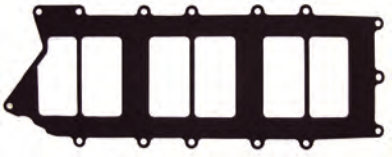

REF	OEM
REC65L-13645-00	65L-13645-00

150PETO/QETO/TXR
175GETO
200N/NETO/PET/TLR
225G/GET

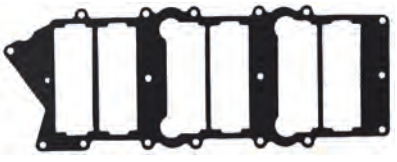

REF	OEM
REC6G5-14416-A1	6G5-14416-A1

150A-AET

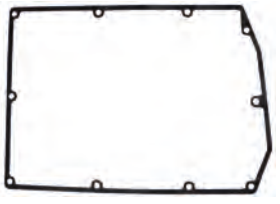

RECAMBIOS MARINOS

REF	OEM
REC6G5-14483-01	6G5-14483-A1

150A/AETO
175AE/AETO
200AET/AETO

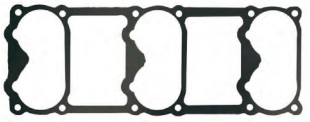

REF	OEM
REC6G5-13645-A1	6G5-13645-A2

150A/AETO
175AE/AETO
200AET/AETO

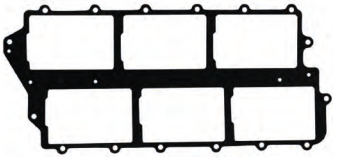

REF	OEM
REC64E-13645-A0	64E-13645-A0

150GETO
D150H 175DET
200GETO/G
225D/DET



REF	OEM
REC61A-13621-A0	61A-13621-A0

Z150P/Q/TLR
175G/GET
200NETO/N/TR/PET
250G/GET/B



REF	OEM
REC61A-11381-A0	61A-11381-A0

225C/CET/FET/G/GET
250AET/B

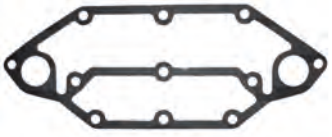

REF	OEM
REC61A-13645-00	61A-13645-00

225C/CET
250AET/B/A/ETD

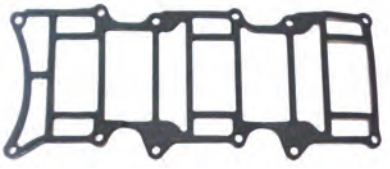

REF	OEM
REC61A-13646-00	61A-13646-00

225C/CET
250AET/B/A/ETD

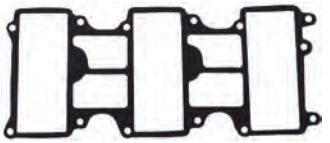

REF	OEM
REC68F-11381-00	68F-11381-00

Z150
VZ150
LZ150
Z175
VZ175
Z200
VZ200
LZ200



REF	OEM
REC6K7-13645-A2	6K7-13645-A2

200CETO
225BET



REF	OEM
REC6K7-13646-A2	6K7-13646-A2

200CETO
225BET

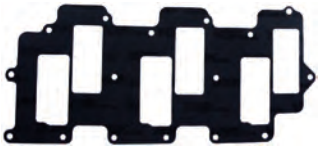

REF	OEM
REC60V-13621-A0	60V-13621-A0

Z300AETO/TR
Z250DETO/TR/FETO
LZ250 (2003-07)
LZ300 (2004-07)
VZ200 (2005-09)
VZ225 (2003-09)
VZ300 (2004-09)
VZ250 (2003-07)
Z300 (2004-07)



REF	OEM
REC60V-13645-00	60V-13645-00

Z300AETO/TR
Z250DETO/TR/FETO
LZ250 (2003-07)
LZ300 (2004-07)
VZ200 (2005-09)
VZ225 (2003-09)
VZ300 (2004-09)
VZ250 (2003-07)
Z300 (2004-07)

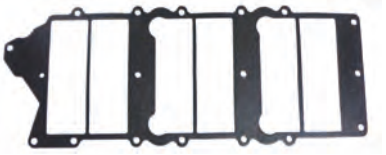

COLA COMPLETA — COMPLETE GEARCASE ASSY — PIEDI COMPLETI — EMBASE COMPLETE

4T STROKES

COLAS DE 4 TIEMPOS — 4 STROKES GEARCASE — PIEDI 4 TEMPI — EMBASES DE MOTEUR 4T

REF	OEM		REDUCCIÓN GEAR RATIO RIDUZIONE REDUCTION
PAF2.6-03020000S	69M-65300-01-4D	17"	2.08
PAF2.6-03020000L	69M-65300-11-4D	22"	2.08

F2.5 (2003+)

P. 283

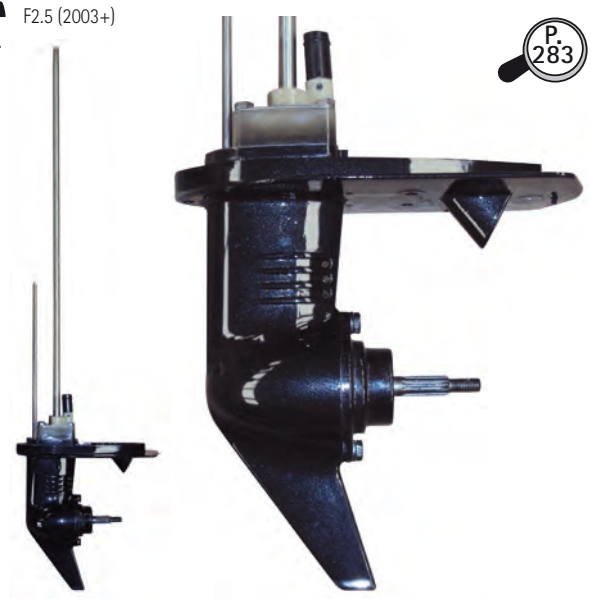

REF	OEM		REDUCCIÓN GEAR RATIO RIDUZIONE REDUCTION
PAF15-06100000S	66M-45300-02-4D	17.3"	2.08
PAF15-06100000L	66M-45300-11-4D	22.3"	2.08

F9.9 (1998-2008)
F13.5 (2002-2007)
F15 (1998-2007)

P. 291

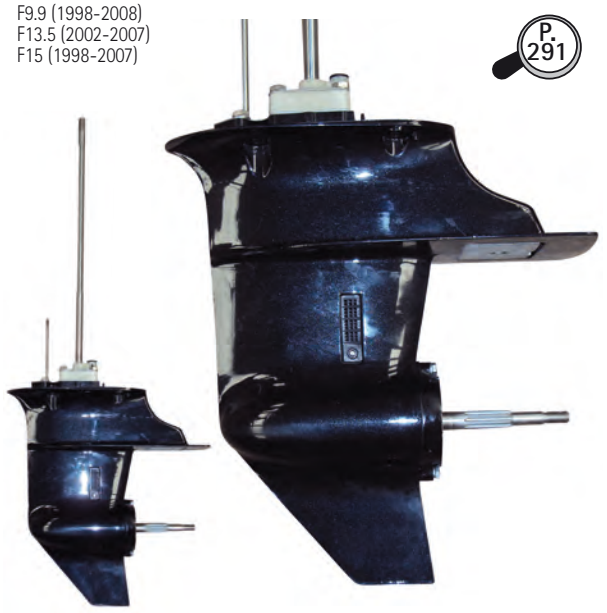

REF	OEM		REDUCCIÓN GEAR RATIO RIDUZIONE REDUCTION
PAF4-0310000S	68D-65300-03-4D	17.1"	2.08
PAF4-0310000L	68D-65300-11-4D	22.1"	2.08

F4 (1998-2009)

P. 284

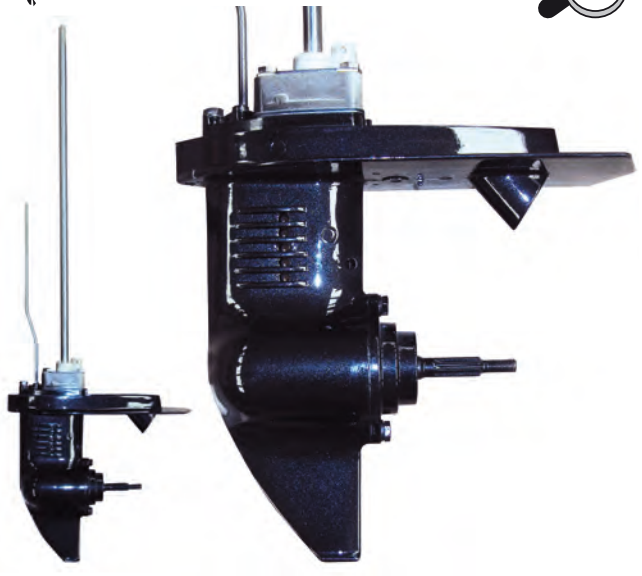

new

REF	OEM		REDUCCIÓN GEAR RATIO RIDUZIONE REDUCTION
PAF20-04000000S	6AH-45300-00-4D 6AH-45300-00-8D	17.1"	2.08
PAF20-04000000L	6AH-45300-10-4D 6AH-45300-10-8D	22.1"	2.08

F9.9 (2009-18)
F13.5 (2007-09)
F15 (2007-18)
F20 (2007-18)

P. 292

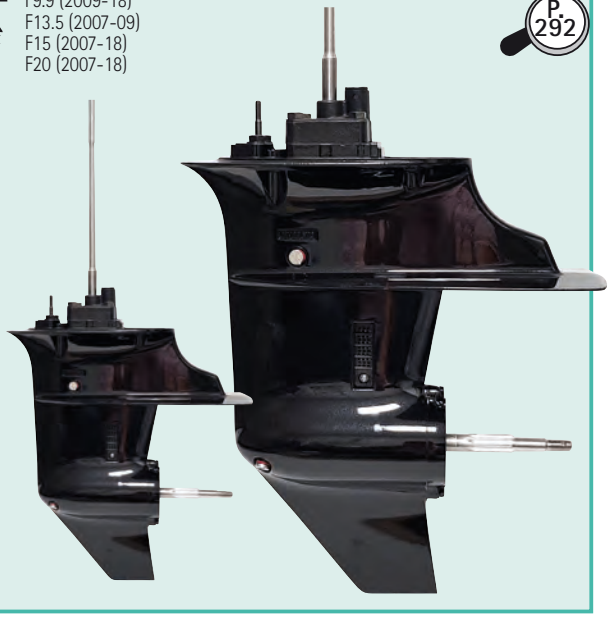

REF	OEM		REDUCCIÓN GEAR RATIO RIDUZIONE REDUCTION
PAF25-04090000S	65W-45300-01-4D	16.6"	2.08
PAF25-04090000L	65W-45300-01-4D	21.6"	2.08

F20 (1998-2003)
F25 (1998+)

P. 294

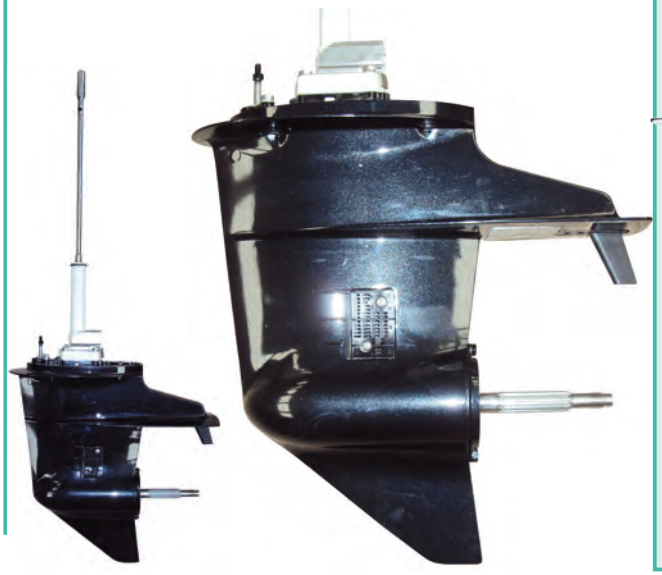

new

REF	OEM		REDUCCIÓN GEAR RATIO RIDUZIONE REDUCTION
PAF60-04000000	69W-45300-00-4D 69W-45300-00-8D 69W-45300-01-8D	20"	1.85

F40D/H (2006+)
F50F/H/T (2005+)
F60A/B/C/T (2002+)

P. 310

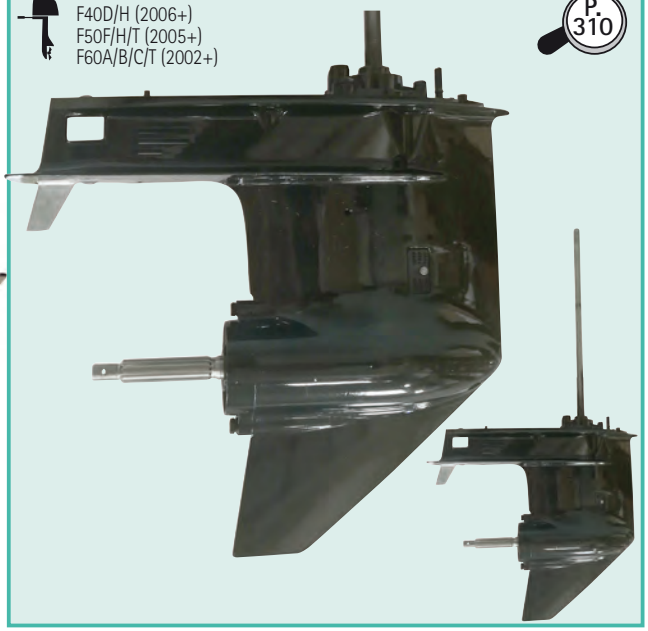

STD	CONTRAROTACIÓN COUNTERROTATION CONTROROTANTE CONTRE ROTATION	OEM		REDUCCIÓN GEAR RATIO RIDUZIONE REDUCTION
REC416-B20F		63P-45300-00-8D	20" V6 90°	2.0:1
REC416-B25F		63P-45300-10-8D	25" V6 90°	2.0:1
	REC418-B25F	64P-45300-10-8D	25" V6 90°	2.0:1

20" --> F150HP
25" --> LF150 HP
V6

P. 326



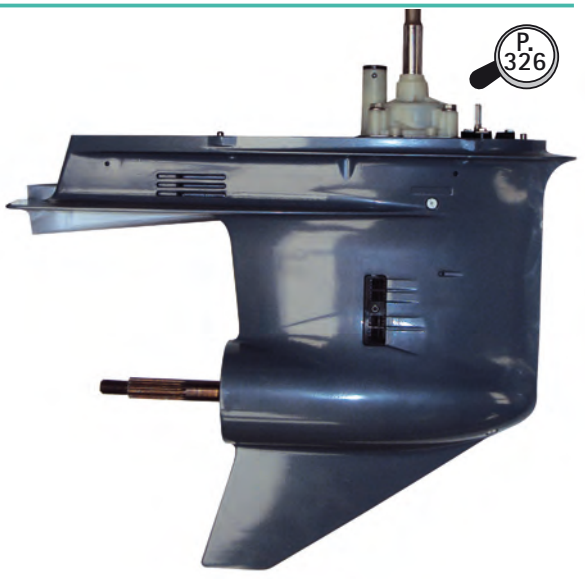

DUAL WATER PICKUP

new

STD	CONTRAROTACIÓN COUNTERROTATION CONTROROTANTE CONTRE ROTATION	OEM		REDUCCIÓN GEAR RATIO RIDUZIONE REDUCTION
REC422-B25F		6P2-45300-20-8D 6P2-45300-21-8D 6P2-45300-40-8D 6P2-45300-41-8D	25"	2.00:1
	REC429-B25F	6P3-45300-40-8D 6P3-45300-41-8D 6P3-45300-42-8D	25"	2.00:1

F200
F250



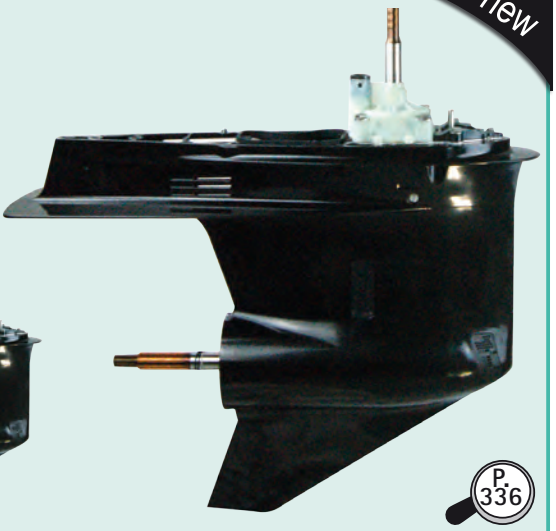

P. 336

STD	CONTRAROTACIÓN COUNTERROTATION CONTROROTANTE CONTRE ROTATION	OEM		REDUCCIÓN GEAR RATIO RIDUZIONE REDUCTION
REC421-B25F		69J-45300-21-8D	25" V6 76º	2.0:1
REC421-B30F		69J-45300-32-8D	30" V6 76º	2.0:1
	REC428-B25F	69K-45300-21-8D	25" V6 90º	2.0:1
	REC428-B30F	69K-45300-34-8D	30" V6	2.0:1

F200 HP
F225 HP

P. 330



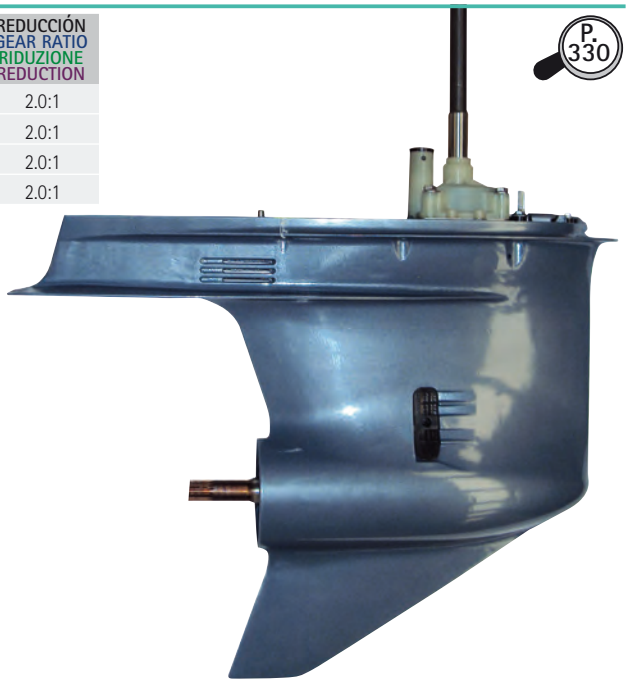

2T STROKES

COLAS DE 2 TIEMPOS — 2 STROKES GEARCASE — PIEDI 2 TEMPI — EMBASES DE MOTEUR 2 TEMPS

REF	OEM		REDUCCIÓN GEAR RATIO RIDUZIONE REDUCTION
REC63V-45300-13-8D	63V-45300-13-8D 63V-45300-13-4D 63V-45300-10-4D	L 22.3"	2.08
REC63V-45300-03-8D	63V-45300-03-8D 63V-45300-03-4D 63V-45300-00-4D	S 17.3"	2.08

9.9 /15 HP (63V & 63W) (1995+)
13.5 HP (66S)

new

P. 350

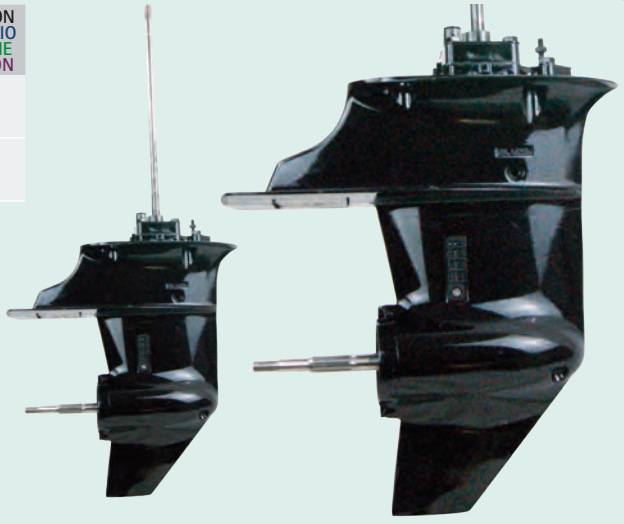

REF	OEM		REDUCCIÓN GEAR RATIO RIDUZIONE REDUCTION
PAF40-04000000L	66T-45300-10-4D 66T-45311-13-8D	20"	2.08

(E)40X/M (1998-09)

new

P. 360

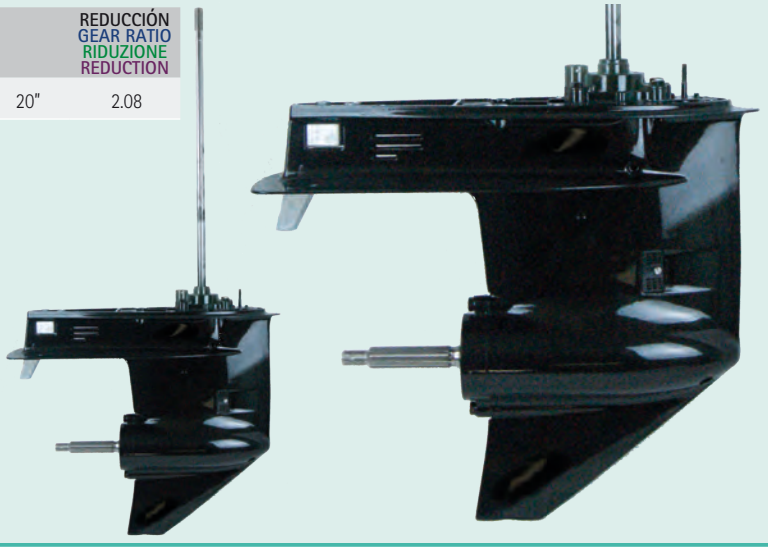

REF	OEM	
REC692-45300-16-8D	692-45300-16-8D 692-45300-14-4D 692-45300-13-4D 692-45300-12-4D	L

75A (692) (1995-09)
85A (688) (1995-09)

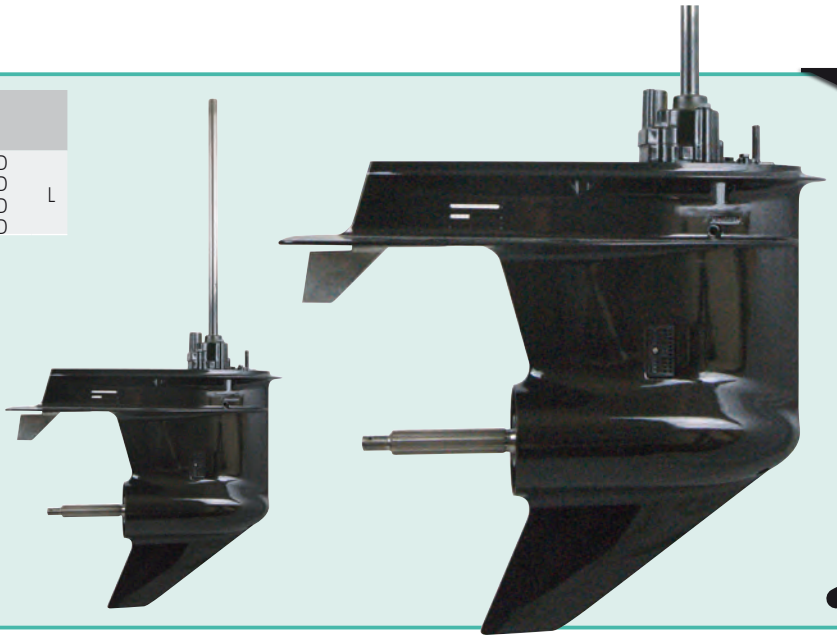

new

P. 370

STD	OEM		REDUCCIÓN GEAR RATIO RIDUZIONE REDUCTION
REC405-A20	6E5-45300-17-8D	20" V4	2.0:1
REC405-A25	6E5-45300-27-8D	25" V4	2.0:1

115HP (1984+)
130HP (1987+)

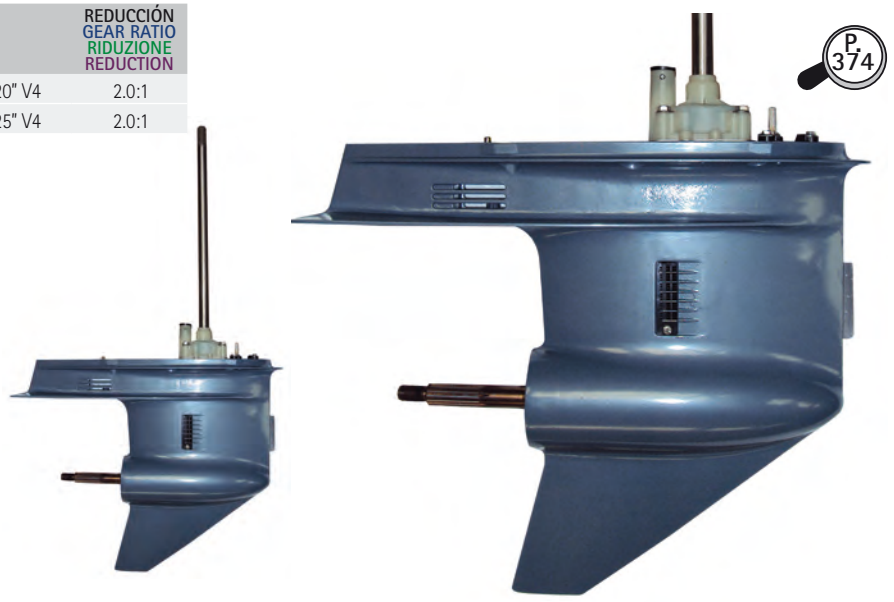

P. 374

STD	CONTRAROTACIÓN COUNTERROTATION CONTROROTANTE CONTRE ROTATION	OEM		REDUCCIÓN GEAR RATIO RIDUZIONE REDUCTION
REC416-A20		64D-45300-01-8D	20" V6 90º 2.6L	1.86:1
REC416-A25		64D-45300-21-8D	25" V6 90º 2.6L	1.86:1
	REC418-A25	64P-45300-10-8D	25" V6 90º 2.6L	1.86:1

150HP (1984+)
175HP (1984+)
200HP (1984+)
225HP (1990+)



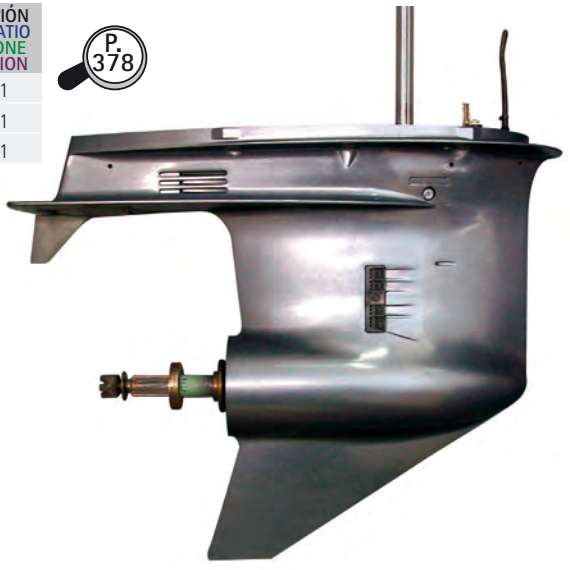

P. 378

STD	OEM		REDUCCIÓN GEAR RATIO RIDUZIONE REDUCTION
REC416-B20	64K-45300-02-NA	20" V6 90° 2.6L	2.0:1

150HP (1987+)
175HP (1989+)
200HP (1989+)
225HP (1992+)





STD	CONTRAROTACIÓN COUNTERROTATION CONTROROTANTE CONTRE ROTATION	OEM		REDUCCIÓN GEAR RATIO RIDUZIONE REDUCTION
REC421-A20		66K-45300-12-NA	20" V6 76° 3.1L / 3.2 L	1.81
REC421-A25		60V-45300-20-8D	25" V6 76°	1.81
	REC428-A25	60W-45300-20-8D	25" V6 90° 3.1L / 3.2 L	1.81

V6
250D / DETO / DETOX / TR / TXR





4T STROKES F2.5 (2003+)

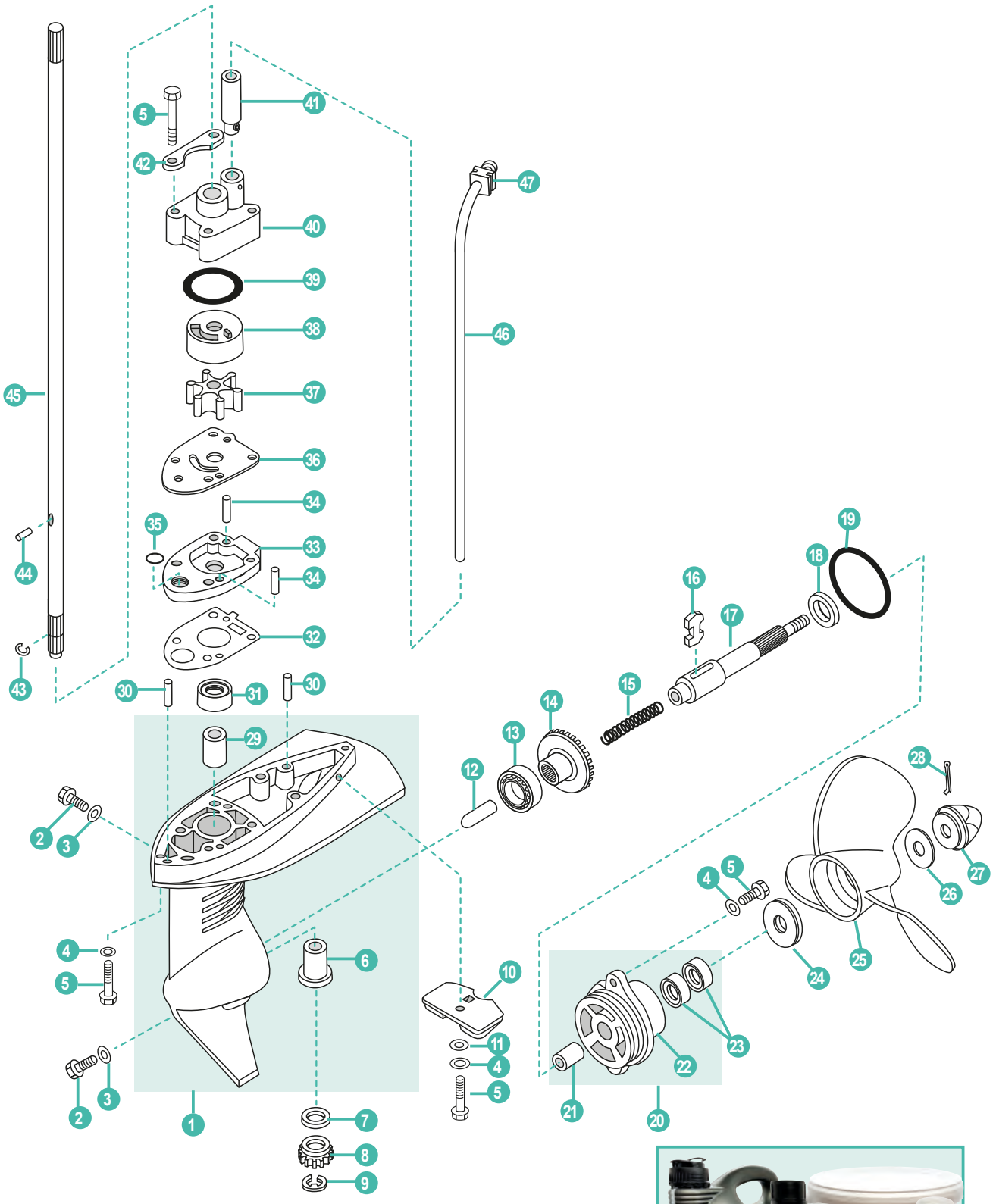



REC80W90U3
REC80W90U6
RECGREU1
RECGREU12

P. 43

	REF	OEM				
	PAF2.6-03020000L	69M-G5300-01-4D	COLA COMPLETA L	COMPLETE GEAR HOUSING L	PIEDE COMPLETO L	EMBASE COMPLETE L
	PAF2.6-03020000S	69M-G5300-00-4D	COLA COMPLETA S	COMPLETE GEAR HOUSING S	PIEDE COMPLETO S	EMBASE COMPLETE S
1	PAF2.6-03000001	69M-G5311-00-4D	CARCASA	LOWER CASING	CARCASSA	CARTER D'EMBASE
2	REC90340-08002	90340-08002	TAPÓN ACEITE	PLUG, OIL	TAPPO OLIO	BOUCHON REMPLISSAGE D'HUILE
3	REC90430-08020	90430-08020	JUNTA	GASKET	GUARNIZIONE	JOINT
4	PAGB/T97.1-8	97595-06520	ARANDELA	WASHER	RONDELLA	RONDELLE
5	PAGB/T5783-M5X12	95895-06020	TORNILLO	BOLT	VITE	VIS
6	PAF2.6-03000002	6L5-45317-09	COJINETE	BEARING	CUSCINETTO	PALIER
7	PAF2.6-03000017	6L5-45533-00-20	GRUESO (2.0mm)	SHIM (2.0mm)	SPESSORE (2.0mm)	CALE (2.0mm)
8	PAF2.6-03000018	6L5-45551-00	PIÑÓN ATAQUE	INITIATIVE GEAR	PIGNONE	PIGNON D'ATTAQUE
9	PAGB/T896-86	99001-06600	CIRCLIP	CIRCLIP	CIRCLIP	CIRCLIP
10	PAF4-03000022	68D-G5251-00	ÁNODO	ANODE	ANODO	ANODE
11	PAGB/T861.1-87	92990-06300	ARANDELA	WASHER	RONDELLA	RONDELLE
12	PAF2.6-03000020	69M-G5635-00	TAPÓN CAMBIO	PLUG, SHIFT	TAPPO	BOUCHON
13	PANTN16003EY	93316-003Y0	COJINETE	BEARING	CUSCINETTO	PALIER
14	PAF2.6-03000019	6L5-45560-00	PIÑÓN MARCHA AVANTE	POSITIVE GEAR ASSY	PIGNONE MARCIA AVANTI	PIGNON DE MARCHE AVANT
15	PAF4-03030003	90501-10064	MUELLE	SPRING, CLUTCH BLOCK	MOLLA	RESSORT
16	PAF2.6-03000202	6L5-45631-00	SELECTOR	CLUTCH BLOCK	SELETTORE	SELECTEUR
17	PAF2.6-030000201	6L5-45631-00	EJE HÉLICE	SHAFT, PROPELLER	ASSE ELICA	ARBRE D'HELICE
18	PAF2.6-03000021	90201-13198	ARANDELA	WASHER	RONDELLA	RONDELLE
19	PAJISB2401P48	93210-48214	TÓRICA	O-RING	O-RING	JOINT TORIQUE
20	PAF2.6-03000300	69M-G5361-00-4D	TAPA CARTER COMPLETA	COVER ASSY, LOWER CASING	COPERCHIO DE CARTER COMPLETO	DIABOLO COMPLET
21	PAF2.6-03000302		COJINETE CAMISA	BEARING, SLEEVE	CUSCINETTO ASSE	BAGUE
22	PAF2.6-03000301	69M-G5361-00-4D	TAPA CARTER	COVER, LOWER CASING	COPERCHIO CARTER	DIABOLO
23	PAF4-03050002	93101-13M12	RETÉN DE ACEITE	OIL SEAL	PARAOLIO	JOINT SPI
24	PAF4-03000025	68D-G5978-00	ESPACIADOR	SPACER	SPESSORE	ENTRETOISE
25	PAF2.6-03010000	6L5-45943-00-EL	HÉLICE	PROPELLER ASSY	ELICHE	HELICE
26	PAF4-03000026	90201-08M54	ARANDELA	WASHER	RONDELLA	RONDELLE
27	PAF4-03080000	6L5-45616-00	TUERCA	LOCK NUT	DADO	ÉCROU
28	PAGB/T91-1.6X12	91490-25030	PASADOR ALETAS	PIN, COTTER	SPINOTTO	LEVIER
29	PAF2.6-03000003	6L5-45316-09	COJINETE	BEARING	CUSCINETTO	PALIER
30	PAF15-00000013	93604-12M07	PASADOR	PIN	SPINOTTO	LEVIER
31	PAF2.6-03000004	93103-09M41	RETÉN DE ACEITE	OIL SEAL	PARAOLIO	JOINT D'HUILE
32	PAF2.6-03000007	69M-G5315-A0	JUNTA	GASKET, WATER PUMP	GUARNIZIONE	JOINT
33	PAF2.6-03000008	69M-G5321-00-94	CUERPO BOMBA	HOUSING, WATER PUMP	CORPO POMPA ACQUA	CORPS DE POMPE À EAU
34	PAF4-03000013	93604-18080	PASADOR	PIN	SPINOTTO	LEVIER
35	PAF2.6-03000009	93210-05001	TÓRICA	O-RING	O-RING	JOINT TORIQUE
36	PAF2.6-03000010	69M-G4323-00	PLACA	OUT PLATE	PIASTRA	PLAQUE
37	PAF2.6-03000100	6L5-44352-00	TURBINA	IMPELLER	GIRANTE	TURBINE
38	PAF2.6-03000015	6L5-44322-00	TAPA BOMBA AGUA	COVER, INNER WATER PUMP	TAPPO	COUVERCLE DE POMPE D'EAU
39	PAJASOF404-19-033	93210-33M85	TÓRICA	O-RING	O-RING	JOINT TORIQUE
40	PAF2.6-03000014	69M-G4311-00	CUERPO BOMBA	WATER PUMP HOUSING	CORPO POMPA ACQUA	CORPS DE POMPE À EAU
41	PAF4-03000021	6R0-44366-00	TUBO BOMBA AGUA	RUBBER TUBE, WATER PUMP	TUBO POMPA ACQUA	TUBE DE POMPE À EAU
42	PAF2.6-03000016	69M-G4328-00	PLATO BOMBA DE AGUA	PLATE, WATER PUMP FIXED	PIASTRA	PLAQUE, POMPE D'EAU
43	PAF2.6-03000012	93440-08819	CIRCLIP	CIRCLIP	CIRCLIP	CIRCLIP
44	PAF2.6-03000013	93604-07M13	PASADOR	PIN	SPINOTTO	LEVIER
45	PAF2.6-03000011S	69M-G5511-00	EJE VERTICAL S	DRIVE SHAFT S	ASSE VERTICALE S	ARBRE DE COMMANDE S
	PAF2.6-03000011L	69M-G5511-10	EJE VERTICAL L	DRIVE SHAFT L	ASSE VERTICALE L	ARBRE DE COMMANDE L
46	PAF2.6-02000003S	69M-44361-00	TUBO DE AGUA S	WATER TUBE S	TUBO DELL'ACQUA S	DURITE D'EAU S
	PAF2.6-02000003L	69M-44361-10	TUBO DE AGUA L	WATER TUBE L	TUBO DELL'ACQUA L	DURITE D'EAU L
47	PAF4-02040002	68D-G4365-00	GOMA DEL TUBO DE AGUA	I-SHAPED RUBBER BAND	GOMMA TUBO ACQUA	PLOT CAOUTCHOUC DE TUBE D'EAU

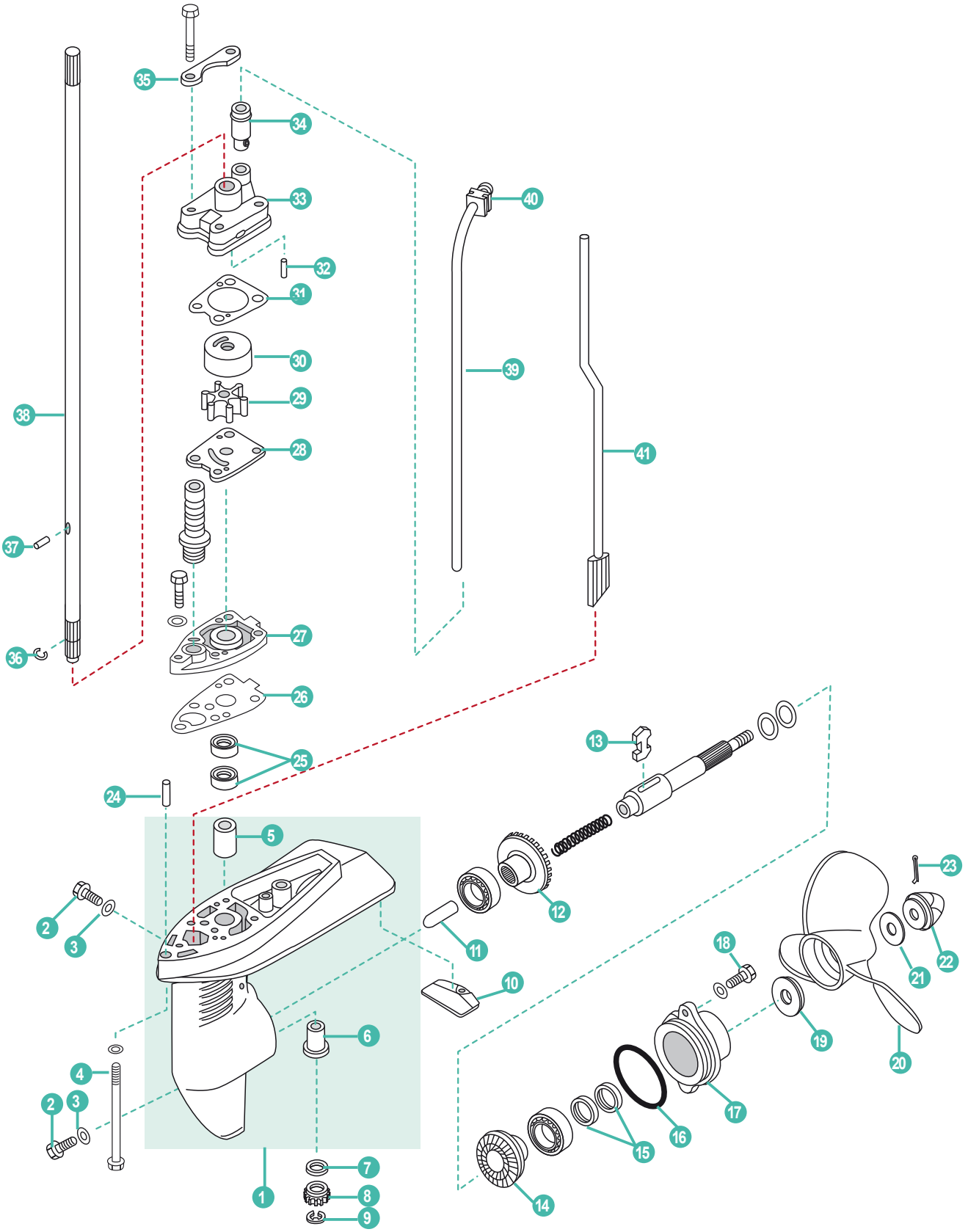
35
34
33
32
31
30
29
28
38
37
36
27
26
25
24
40
39
41
5
2
3
4
2
3
6
1
7
8
9
13
12
11
10
18
23
22
21
19
20
17
16
15
14

	REF	OEM				
	PAF4-0310000L	68D-G5300-10-4D	COLA COMPLETA L	COMPLETE GEAR HOUSING L	PIEDE COMPLETO L	EMBASE COMPLETE L
	PAF4-0310000S	68D-G5300-00-4D	COLA COMPLETA S	COMPLETE GEAR HOUSING S	PIEDE COMPLETO S	EMBASE COMPLETE S
1	PAF4-03000001	68D-G5300-11-4D	CARCASA MOTOR	CRANK CASE	CARCASSA	CARTER D'EMBASE
2	REC90340-08002	90340-08002	TAPÓN ACEITE	PLUG, OIL	TAPPO OLIO	BOUCHON REMPLISSAGE D'HUILE
3	REC90430-08020	90430-08020	JUNTA	GASKET	GUARNIZIONE	JOINT
4	PAGB/T5782-M6X125	97013-06035	TORNILLO HEXAGONAL L	HEXAGON BOLT L	VITE L	VIS L
	PAGB/T5782-2000S	PAGB/T5782-2000S	TORNILLO HEXAGONAL S	HEXAGON BOLT S	VITE S	VIS S
5	PAF4-03000003	6E0-45316-09	RODAMIENTO	BALL BEARING	CUSCINETTO	ROULEMENT À BILLE
6	PAF4-03000002	6E0-45317-09	COJINETE	BEARING	CUSCINETTO	PALIER
7	PAF4-03000006	90204-11M49	ARANDELA	WASHER	RONDELLA	RONDELLE
8	PAF4-03000007	6E0-45551-00	PIÑÓN ATAQUE	INITIATIVE GEAR	MARCIA INIZIATIVA	PIGNON D'ATTAQUE
9	PAGB/T896-86	99001-06600	CIRCLIP	CIRCLIP	CIRCLIP	CIRCLIP
10	PAF4-03000022	68D-G5251-00	ÁNODO	ANODE	ANODO	ANODE
11	PAF4-03000008	67D-45635-00	ÉMBOLO	PLUGER, SHIFT	BULLONE	BOUCHON
12	PAF4-03010000	67D-45560-00	PIÑÓN MARCHA AVANTE	POSITIVE GEAR ASSY	PIGNONE MARCIA AVANTI	PIGNON DE MARCHE AVANT
13	PAF4-03030002	67D-45631-01	SELECTOR	CLUTCH BLOCK	SELETTORE	SELECTEUR
14	PAF4-03040000	67D-45570-00	PIÑÓN MARCHA ATRÁS	REVERSE GEAR	PIGNONE MARCIA INDIETRO	PIGNON MARCHE ARRIÈRE
15	PAF4-03050002	93101-13M12	RETÉN DE ACEITE	OIL SEAL	PARAOLIO	JOINT SPI
16	PAJISB2401P48	93210-48214	TÓRICA	O-RING	O-RING	JOINT TORIQUE
17	PAF4-03050001	68D-G5361-00-4D	TAPA CÁRTER	COVER, LOWER CASING	TAPPO CARTER	DIABOLO
18	PAGB/T5783-M5X12	95895-06016-00	TORNILLO HEXAGONAL	HEXAGON BOLT	VITE ESSAGONALE	VIS HEXAGONAL
19	PAF4-03000025	68D-G5987-00	ESPACIADOR	SPACER	DISTANZIALE	ENTRETOISE
20	PAF4-03070000	6E0-45943-01-EL	HÉLICE	PROPELLER	ELICHE	HELICE
21	PAF4-03000026	90201-08M54	ARANDELA INOX.	WASHER, STAINLESS STEEL	RONDELLA INOX.	RONDELLE INOX
22	PAF4-03080000	6L5-45616-00	TUERCA	LOCK NUT	DADO	ÉCROU
23	PAGB/T91-1.6X12	91490-25030	PASADOR ALETAS	PIN, COTTER 2.5x30	PIN	PIN
24	PAF4-00000001	90387-06806	PASADOR VACÍO	HOLLOW PIN	SPINOTTO	GUIDE
25	PAF4-03000027	93101-10M14	RETÉN DE ACEITE	OIL SEAL	PARAOLIO	JOINT SPI
26	PAF4-03000011	68D-G5315-A0	JUNTA HERMÉTICA BASE	HERMETIC GASKET, WATER PUMP BASE	GUARNIZIONE BASE POMPA ACQUA	JOINT DE BASE DE POMPE À EAU
27	PAF4-03000012	68D-G5321-00	BASE BOMBA AGUA	BASE, WATER PUMP	BASE POMPA	BASE DE POMPE À EAU
28	PAF4-03000015	6E0-44323-00	PLACA	OUT PLATE	PIASTRA	PLAQUE
29	PAF4-03060000	6E0-44352-00	TURBINA BOMBA AGUA	IMPELLER, WATER PUMP	GIRANTE POMPA	TURBINE, POMPE D'EAU
30	PAF4-03000017	6E0-44322-02	TAPA, BOMBA AGUA	COVER, INNER WATER PUMP	COPERCHIO, POMPE D'EAU	COUVERCLE, POMPE D'EAU
31	PAF4-03000018	68D-G4315-A0	JUNTA TAPA BOMBA AGUA	GASKET, WATER PUMP COVER	GUARNIZIONE COPERCHIO	JOINT COUVERCLE
32	PAF4-03000013	93604-18080	PASADOR BOMBA AGUA	PIN, WATER PUMP	SPINOTTO POMPA ACQUA	LEVIER POMPE D'EAU
33	PAF4-03000019	68D-G4311-01	CUERPO BOMBA AGUA	HOUSING, WATER PUMP	CORPO POMPA	LOGEMENT POMPE D'EAU
34	PAF4-03000021	67D-44366-00	TUBO GOMA BOMBA AGUA	RUBBER TUBE, WATER PUMP	TUBO IN GOMMA, POMPA	DURITE DE COUTCHOUC
35	PAF4-03000020	68D-G4328-00	PLCA BOMBA AGUA	PLATE, WATER PUMP FIXED	PIASTRA POMPA	PLAQUE ,POMPE D'EAU
36	PAF4-03000005	90467-08M01	CLIP	CLIP	CLIP	CLIP
37	PAF4-03000016	93604-09066	PASADOR	PIN	SPINOTTO	LEVIER
38	PAF4-03000004L	6E0-45511-11	EJE VERTICAL S	DRIVE SHAFT S	ASSE VERTICALE S	ARBRE DE COMMANDE S
	PAF4-03000004S	6E0-45511-01	EJE VERTICAL L	DRIVE SHAFT L	ASSE VERTICALE L	ARBRE DE COMMANDE L
39	PAF4-02040001	68D-G4360-10	TUBO DE AGUA S	WATER TUBE S	TUBO DELL'ACQUA S	DURITE D'EAU S
	PAF4-02040001S	68D-G4360-00	TUBO DE AGUA L	WATER TUBE L	TUBO DELL'ACQUA L	DURITE D'EAU L
40	PAF4-02040002	68D-G4365-00	GOMA DEL TUBO DE AGUA	I-SHAPED RUBBER BAND	GOMMA TUBO ACQUA	PLOT CAOUTCHOUC DE TUBE D'EAU
41	PAF4-03020000L	68D-G4150-10	VARILLA SELECTOR L	CAM ASSY, SHIFT ROD L	ASTICELLA CAMBIO L	LEVIER DE VITESSE L
	PAF4-03020000S	68D-G4150-00	VARILLA SELECTOR S	CAM ASSY, SHIFT ROD S	ASTICELLA CAMBIO S	LEVIER DE VITESSE S

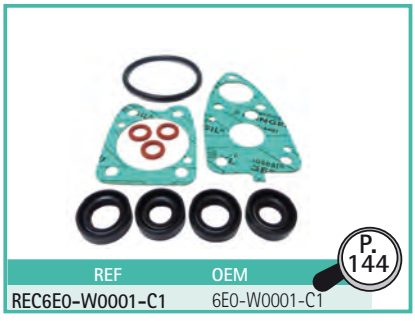

REF	OEM
REC6E0-W0001-C1	6E0-W0001-C1

P. 144



REF	OEM
REC6E0-W0078-A2	6E0-W0078-A2

P. 150



REC80W90U3
REC80W90U6
RECGREU1
RECGREU12

P. 43

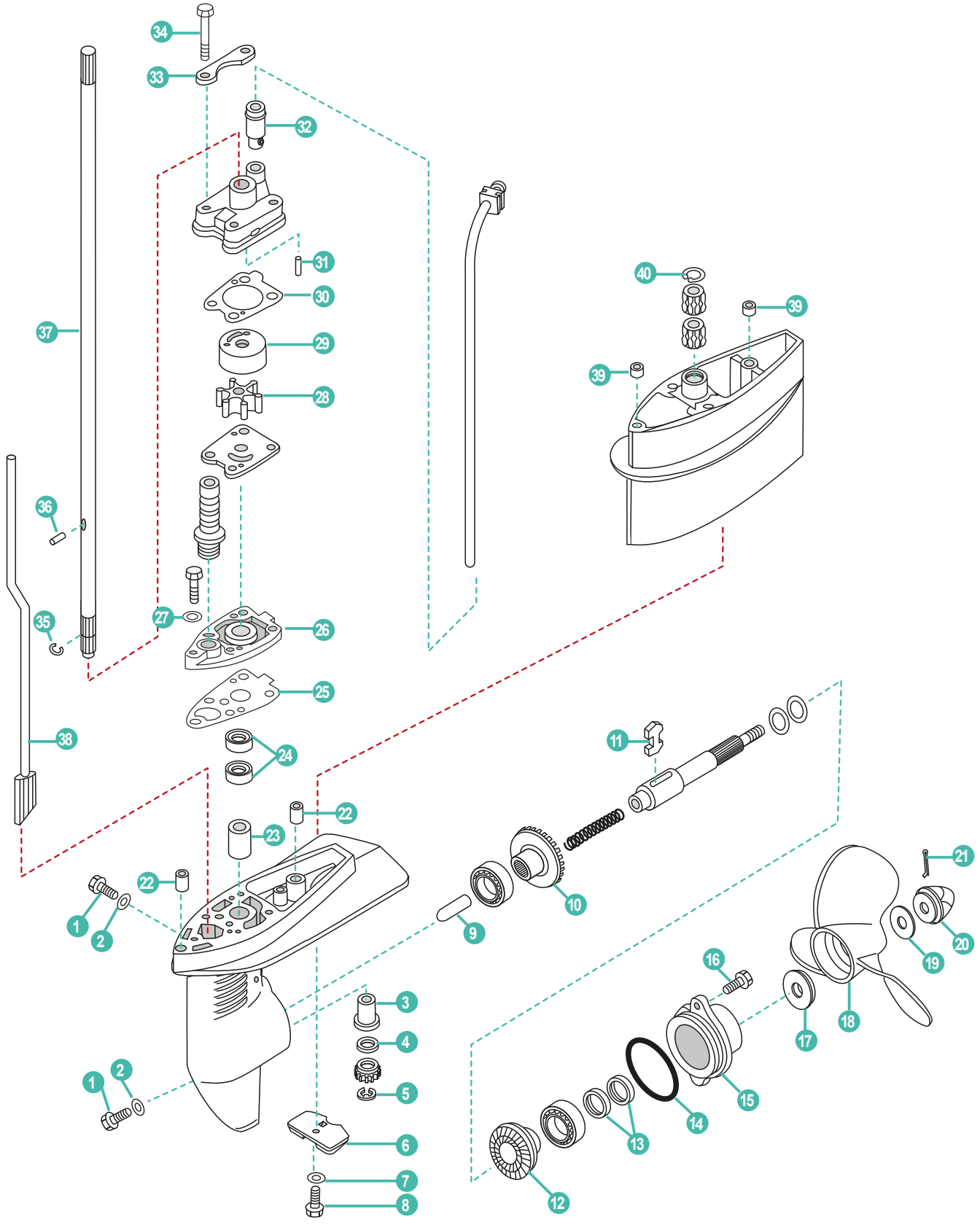
34
33
32
31
30
29
28
37
36
35
27
26
25
38
24
22
23
22
1
2
3
4
5
1
2
6
7
8
40
39
39
11
10
9
21
20
19
16
18
17
15
14
13
12

	REF	OEM				
1	REC90340-08002	90340-08002	TORNILLO DRENAJE	BOLT, DISCHARGING OIL	VITE DRENAGGIO	BOUCHON DE VIDANGE
2	REC90430-08020	90430-08020	JUNTA	GASKET	GUANIZIONE	JOINT
3	PAF4-03000002	6E0-45317-09	COJINETE	BEARING	CUSCINETTO	PALIER
4	PAF4-03000006	90201-11M49	ARANDELA	WASHER	RONDELLA	RONDELLE
5	REC99001-06600	99001-06600	CIRCLIP	CIRCLIP	CIRCLIP	CIRCLIP
6	CM6L5-45251-02A	68D-G5251-00	ÁNODO	ANODE	ANODO	ANODE
7	PAGB/T861.1-87	92990-06300	ARANDELA	WASHER	RONDELLA	RONDELLE
8	PAGB/T5783-M6X14	95895-06012	TORNILLO	SCREW	VITE	VIS
9	PAF4-03000008	67D-45635-00	ÉMBOLO	PLUGER, SHIFT	BULLONE	AXE DE VERROUILLAGE DU CRABOT
10	PAF4-03010000	67D-45560-00	PIÑÓN MARCHA AVANTE	POSITIVE GEAR ASSY	PIGNONE MARCIA AVANTI	PIGNON DE MARCHE AVANT
11	PAF4-03030002	67D-45631-01	SELECTOR	CLUTCH BLOCK	SELETTORE	BLOQUEUR
12	PAF4-03040000	67D-45570-00	PIÑÓN MARCHA ATRÁS	REVERSE GEAR	PIGNONE MARCIA INDIETRO	PIGNON MARCHE ARRIÈRE
13	REC93101-13M12	93101-13M12	RETÉN DE ACEITE	OIL SEAL	PARAOLIO	JOINT SPI
14	REC93210-48214	93210-48214	TÓRICA	O-RING	O-RING	JOINT TORIQUE
15	PAF4-03050001	68D-G5361-00-4D	TAPA CÁRTER	COVER, LOWER CASING	COPERCHIO CARTER	DIABOLO
16	PAGB/T5783-M5X12	95895-06016	TORNILLO HEXAGONAL	HEXAGON BOLT M6x18	VITE	VIS
17	PAF4-03000025	68D-G5987-00	ESPACIADOR	SPACER	DISTANZIALE	ENTRETOISE
18	PAF4-03070000	6E0-45943-01	HÉLICE	PROPELLER	ELICHE	HELICE
	PAF2.6-03010000	6E0-45949-00	HÉLICE	PROPELLER	ELICHE	HELICE
19	PAF4-03000026	90201-08M54	ARANDELA INOX.	WASHER, STAINLESS STEEL	RONDELLA INOX.	RONDELLE INOX
20	PAF4-03080000	6L5-45646-00	TUERCA	LOCK NUT	DADO	ÉCROU
21	PAGB/T91-1.6X12	91490-25030	PASADOR ALETAS	PIN, COTTER 2.5x30	PIN	PIN
22	PAF4-00000001	90387-06806	ESPACIADOR	SPACER	DISTANZIALE	ENTRETOISE
23	PAF4-03000003	6E0-45316-09	RODAMIENTO	BALL BEARING	CUSCINETTO	ROULEMENT À BILLE
24	PAF4-03000027	93101-10M14	RETÉN DE ACEITE	OIL SEAL	PARAOLIO	JOINT SPI
25	PAF4-03000011	68D-G5315-A0	JUNTA BASE	GASKET, WATER PUMP BASE	GUARNIZIONE BASE POMPA ACQUA	JOINT DE POMPE À EAU
26	PAF4-03000012	68D-G5321-00	PLACA	OUT PLATE	PIASTRA	PLAQUE
27	PAGB/T97.1-6	92995-06600	ARANDELA	WASHER	RONDELLA	RONDELLE
28	REC6E0-44352-00	6E0-44352-00	TURBINA BOMBA AGUA	IMPELLER, WATER PUMP	GIRANTE POMPA	TURBINE DEPOMPE À EAU
29	PAF6-03000002	6BX-44322-00	TAPA, BOMBA AGUA	COVER, INNER WATER PUMP	COPERCHIO, POMPE ACQUA	INSERT DE POMPE À EAU
30	PAF4-03000018	6BX-G4315-01	JUNTA TAPA BOMBA AGUA	GASKET, WATER PUMP COVER	GUARNIZIONE COPERCHIO	JOINT COUVERCLE
31	PAF4-03000013	93604-18080	PASADOR BOMBA AGUA	PIN, WATER PUMP	SPINOTTO POMPA ACQUA	PIN DE POMPE À EAU
32	PAF4-03000021	67D-44366-00	TUBO GOMA BOMBA AGUA	RUBBER TUBE, WATER PUMP	TUBO IN GOMMA, POMPA	DURITE COUTCHOUC
33	PAF4-03000020	68D-G4328-00	PLCA BOMBA AGUA	PLATE, WATER PUMP FIXED	PIASTRA POMPA	PLAQUE ,POMPE À EAU
34	REC97095-06045	97095-06045	TORNILLO	SCREW	VITE	VIS
35	PAF4-03000005	90467-08M01	CLIP	CLIP	CLIP	CLIP
36	PAF4-03000016	93604-09066	PASADOR	PIN	SPINOTTO	CLAVETTE
37	PAF4-03000004S	68D-G5511-00	EJE VERTICAL **S**	DRIVE SHAFT **S**	ASSE VERTICALE **S**	ARBRE DE COMMANDE **S**
	PAF4-03000004L	68D-G5511-10	EJE VERTICAL **L**	DRIVE SHAFT **L**	ASSE VERTICALE **L**	ARBRE DE COMMANDE **L**
38	PAF4-03020000S	6BX-G4150-00	EJE LEVA COMPLETO **S**	CAM ASSY, SHIFT ROD **S**	ASSE LEVA COMPLETO **S**	LEVIER DE VITESSE **S**
	PAF4-03020000L	6BX-G4150-10	EJE LEVA COMPLETO **L**	CAM ASSY, SHIFT ROD **L**	ASSE LEVA COMPLETO **L**	LEVIER DE VITESSE **L**
39	PAF4-00000001	90387-06806	ESPACIADOR	SPACER	DISTANZIALE	ENTRETOISE
40	PAGB/T893.1-22	93420-22M03	SEGURO	CLAMP	BLOCCAGGIO	CLAVETTE



REC80W90U3
REC80W90U6
RECGREU1
RECGREU12

P. 43

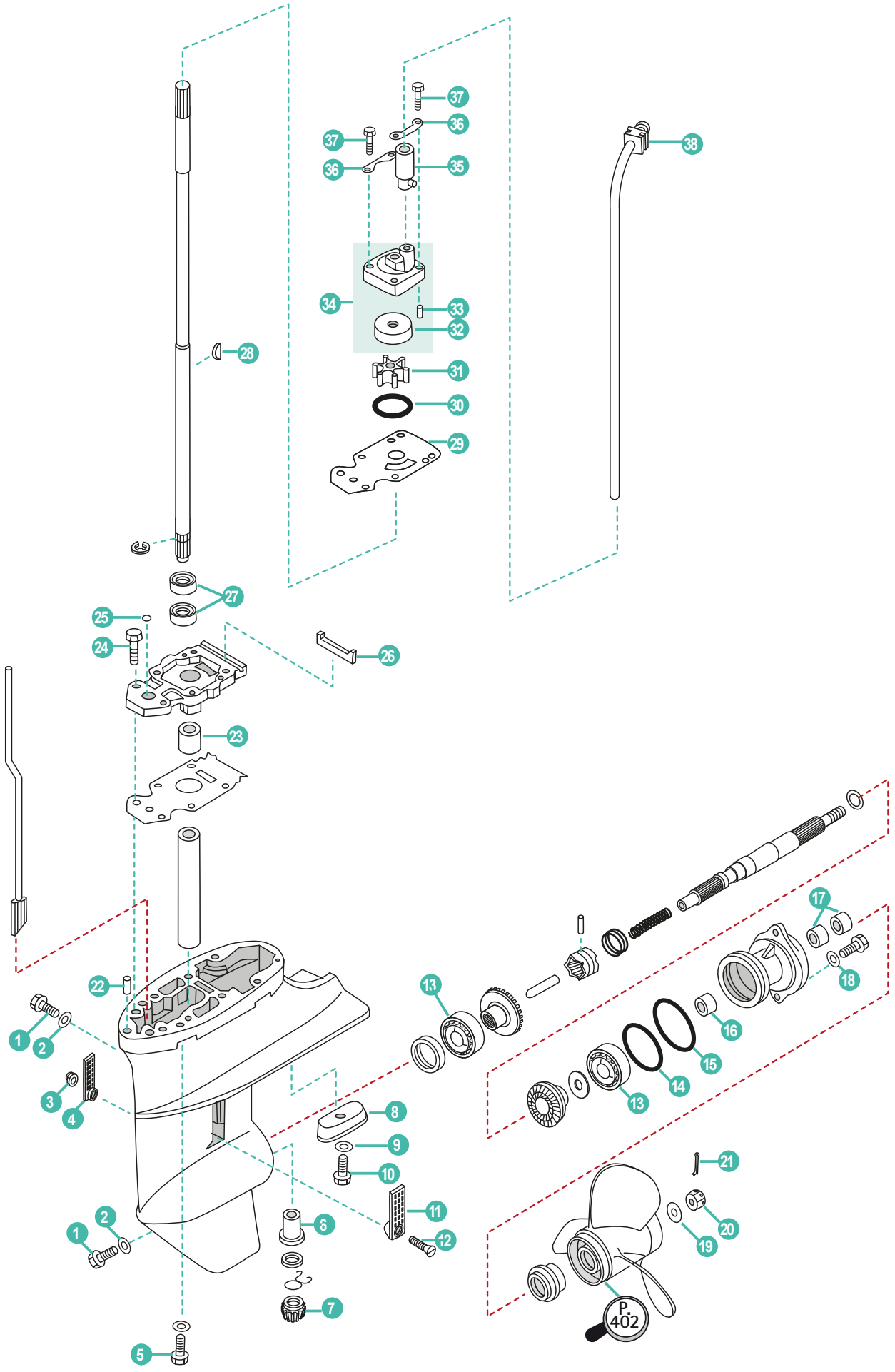
37
36
35
38
34
33
32
28
31
30
29
27
25
24
26
23
22
1
2
3
4
8
9
10
11
12
6
7
5
13
17
18
16
15
14
21
20
19
P. 402

	REF	OEM				
1	REC90340-08002	90340-08002	TORNILLO DRENAJE	BOLT, DISCHARGING OIL	VITE DRENAGGIO	BOUCHON DE VIDANGE
2	REC90430-08020	90430-08020	JUNTA	GASKET	GUANIZIONE	JOINT
3	PAGB/T6182-M5	90185-05002	TUERCA AUTOBLOCANTE	NUT LOCKING M5	DADO CHIUSURA M5	ECROU FREIN M5
4	PAF15-06000002	6G1-45215-00	CUBIERTA ENTRADA DE AGUA **2**	WATER INLET **2**	COPERCHIO ENTRATA ACQUA **2**	GRILLE D'ENTREE D'EAU **2**
5	PAGB/T5783-M8X35	97075-08035	PERNO	STUD	BULLONE	BOULON
6	REC6G1-45317-09	6G1-45317-09	RODAMIENTO	BALL BEARING	CUSCINETTO	ROULEMENT À BILLE
7	REC68T-45551-00	6N0-G5551-A0	PIÑÓN ATAQUE	INITIATIVE GEAR	MARCIA INIZIATIVA	PIGNON D'ATTAQUE
8	CM68T-45251-00A	68T-45251-00	ÁNODO	ANODE	ANODO	ANODE
9	PAGB/T861.1-87	92990-06300	ARANDELA	WASHER	RONDELLA	RONDELLE
10	PAGB/T5783-M5X12	95895-06016	TORNILLO	SCREW	VITE	VIS
11	PAF15-06000003	6G1-45214-00	CUBIERTA ENTRADA DE AGUA **1**	WATER INLET **1**	COPERCHIO ENTRATA ACQUA **1**	GRILLE D'ENTREE D'EAU **1**
12	PAGB/T820-M5X25	90152-05M03	TORNILLO	SCREW	VITE	VIS
13	PAGB/T276-6004C2	93306-004YH	COJINETE	BEARING	CUSCINETTO	PALIER
14	REC93210-49046	93210-49046	TÓRICA	O-RING	O-RING	JOINT TORIQUE
15	REC93210-53M08	93210-53M08	TÓRICA	O-RING	O-RING	JOINT TORIQUE
16	REC6G1-45362-09	6G1-45362-09	RODAMIENTO	BALL BEARING	CUSCINETTO	ROULEMENT À BILLE
17	REC93101-15074	93101-15074	RETÉN DE ACEITE	OIL SEAL	PARAOLIO	JOINT SPI
18	PAGB/T97.1-6	92995-06600	ARANDELA	WASHER	RONDELLA	RONDELLE
19	REC90201-10M01	90201-10M01	ARANDELA	WASHER	RONDELLA	RONDELLE
20	REC90171-10M01	90171-10M01	TUERCA	LOCK NUT	DADO	ÉCROU
21	REC91490-30025	91490-30020	PASADOR ALETAS	PIN, COTTER	PIN	GOUPILLE
22	PAF15-00000013	93604-12M07	PIN CENTRADOR	HOLLOW PIN	SPINOTTO DI CENTRAGGIO	PIN DE CENTRAGE
23	REC6G1-45316-09	6G1-45316-09	RODAMIENTO	BALL BEARING	CUSCINETTO	ROULEMENT À BILLE
24	PAGB/T5783-M8X25	97080-08025	PERNO	STUD	BULLONE	BOULON
25	REC93210-06ME6	93210-06ME6	TÓRICA	O-RING	O-RING	JOINT TORIQUE
26	PAF15-06020005	63V-45375-00	RETÉN DE GOMA	SEAL, RUBBER	TENUTA IN GOMMA	JOINT DE COUTCHOUC
27	REC93101-11M23	93101-11M23	RETÉN DE ACEITE	OIL SEAL	PARAOLIO	JOINT SPI
28	REC664-44338-00	664-44338-00	CUÑA	KEY WOODRUFF	CHIAVETTA	CLAVETTE
29	REC68T-44323-00	68T-44323-00	JUNTA TAPA BOMBA AGUA	GASKET, WATER PUMP COVER	GUARNIZIONE COPERCHIO	JOINT COUVERCLE
30	REC93210-44398	93210-44398	TÓRICA	O-RING	O-RING	JOINT TORIQUE
31	REC68T-44352-00	68T-44352-00	TURBINA BOMBA AGUA	IMPELLER, WATER PUMP	GIRANTE POMPA	TURBINE DE POMPE À EAU
32	REC63V-44322-00	63V-44322-00	TAPA, BOMBA AGUA	COVER, INNER WATER PUMP	COPERCHIO, POMPE ACQUA	COUVERCLE, POMPE À EAU
33	PAF15-00000013	93604-12M07	PIN CENTRADOR	HOLLOW PIN	SPINOTTO DI CENTRAGGIO	PIN DE CENTRAGE
34	REC63V-44301-00	63V-44301-00	CUERPO BOMBA AGUA	HOUSING, WATER PUMP	CORPO POMPA	CORPS DE POMPE À EAU
35	REC68T-44366-00	68T-44366-00	TUBO GOMA BOMBA AGUA	RUBBER TUBE, WATER PUMP	TUBO IN GOMMA, POMPA	DURITE COUTCHOUC
36	PAF15-06000014	63V-44328-00	PLACA	OUT PLATE	PIASTRA	PLAQUE
37	REC97080-08045	97080-08045	PERNO	STUD	BULLONE	BOULON
38	PAF15-02000006	63V-44365-10	GOMA DEL TUBO DE AGUA	I-SHAPED RUBBER BAND	GOMMA TUBO ACQUA	PLOT CAOUTCHOUC DE TUBE D'EAU



REC80W90U3
REC80W90U6
RECGREU1
RECGREU12

P. 43



REF	OEM
REC68T-W0001-20	68T-W0001-20

P. 144



REF	OEM
REC68T-W0078-00	68T-W0078-00

P. 150

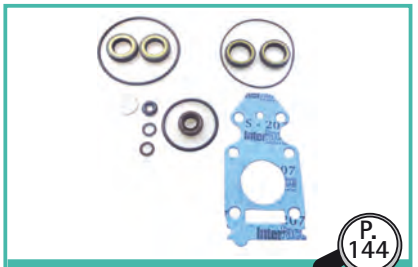

REF	OEM	
REC69G-W0001-20	69G-W0001-20	FT9.9G

P. 144

4T STROKES F9.9 (1998-08) • F9.9C • F13.5 (2002-07) • F15 (1998-07) • F15A

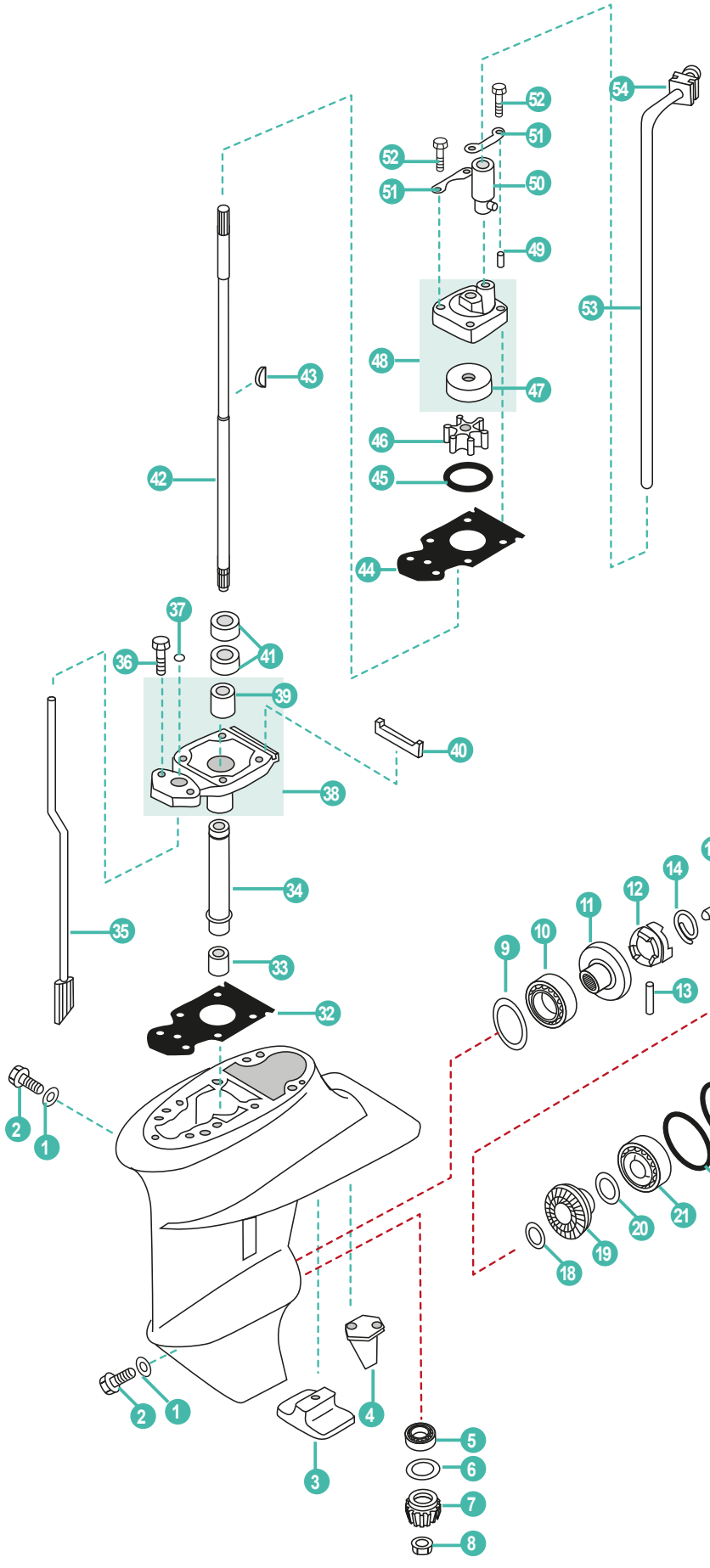

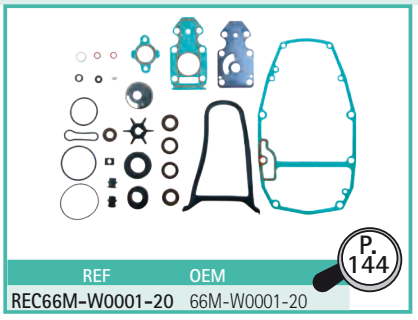

P. 144

REF	OEM
REC66M-W0001-20	66M-W0001-20



REC80W90U3
REC80W90U6
RECGREU1
RECGREU12

P. 43

P. 402



P. 150

REF	OEM
REC63V-W0078-01	63V-W0078-01

	REF	OEM				
	PAF15-06100000L	66M-45300-11-4D	COLA COMPLETA L	COMPLETE GEAR HOUSING L	PIEDE COMPLETO L	EMBASE COMPLETE L
	PAF15-06100000S	66M-45300-02-4D	COLA COMPLETA S	COMPLETE GEAR HOUSING S	PIEDE COMPLETO S	EMBASE COMPLETE S
1	REC90430-08020	90430-08020	ARANDELA	WASHER	RONDELLA	RONDELLE
2	REC90340-08002	90340-08002	TAPÓN ACEITE	PLUG, OIL	TAPPO OLIO	BOUCHON REMPLISSAGE D'HUILE
3	CM61N-45251-01	61N-45251-01	ÁNODO	ANODE	ANODO	ANODE
4	CM66M-45371-00	66M-45371-00	ÁNODO TIMÓN	TAB-TRIM	ANODO TIMONE	ANODE
5	REC93341-214U1	93314-314V8	COJINETE	BEARING	CUSCINETTO	PALIER
6	PAF15-06000008	6E8-45587-10-13	GRUESO	SHIM	SPESSORE	CALE
7	REC63V-45551-00	63V-45551-00	PIÑÓN ATAQUE	INITIATIVE GEAR	MARCIA INIZIATIVA	PIGNON D'ATTAQUE
8	REC90179-08M06	90179-08M06	TUERCA	LOCK NUT	DADO	ÉCROU
9	PAF15-06000010-1	664-45567-01-10	GRUESO	SHIM	SPESSORE	CALE
10	REC93332-00005	93332-00005	COJINETE	BEARING	CUSCINETTO	PALIER
11	REC6E7-45560-01	6E7-45560-01	PIÑÓN MARCHA AVANTE	POSITIVE GEAR ASSY	PIGNONE MARCIA AVANTI	PIGNON DE MARCHE AVANT
12	REC682-45631-00	682-45631-00	SELECTOR	CLUTCH BLOCK	SELETTORE	SELECTEUR
13	REC90250-05010	90250-05010	PASADOR	PIN	SPINOTTO	LEVIER
14	REC648-45633-00	648-45633-00	MUELLE	SPRING	MOLLA	RESSORT
15	REC650-45635-00	650-45635-00	ÉMBOLO	PLUNGER	BULLONE	BOUCHON
16	PAF15-06070002	90501-14M06	MUELLE	SPRING	MOLLA	RESSORT
17	REC683-45611-00	683-45611-00	EJE HÉLICE	PROPELLER SHAFT	ASSE ELICA	ARBRE D'HELICE
18	REC90201-17682	90201-17682	ARANDELA	WASHER	RONDELLA	RONDELLE
19	REC6E7-45570-00	6E7-45571-00	PIÑÓN MARCHA ATRÁS	REVERSE GEAR	PIGNONE MARCIA INDIETRO	PIGNON MARCHE ARRIÈRE
20	PAF15-06080006-1	626-45577-00-01	GRUESO	SHIM	SPESSORE	CALE
21	REC93306-00501	93306-00501	COJINETE	BEARING	CUSCINETTO	PALIER
22	REC93210-57M09	93210-57M09	TÓRICA	O-RING	O-RING	JOINT TORIQUE
23	PAF15-06080003	93210-56M80	TÓRICA	O-RING	O-RING	JOINT TORIQUE
24	REC683-45361-01-4D	683-45361-02-4D	DIÁBOLO	CAP, LOWER CASING	COPERCHIO CARTER INFERIORE	DIABOLO
25	PAGB/T97.1-6	92995-06600	ARANDELA	WASHER	RONDELLA	RONDELLE
26	PAGB/T5783-M6X20	97095-06020	TORNILLO	SCREW	VITE	VIS
27	REC93315-317U2	93315-317U2	COJINETE	BEARING	CUSCINETTO	PALIER
28	REC93101-17054	93101-17054	RETÉN DE ACEITE	OIL SEAL	PARAOLIO	JOINT SPI
29	REC6E7-45987-00	6E7-45987-00	ESPACIADOR	SPACER	DISTANZIALE	ENTRETOISE
30	REC90171-10M01	90171-10M01	TUERCA	LOCK NUT	DADO	ÉCROU
31	REC91490-30025	91490-30020	PASADOR ALETAS	PIN, COTTER	PIN	GOUPILLE
32	REC63V-45315-A0	63V-45315-A0	JUNTA	GASKET	GUANIZIONE	JOINT
33	REC93315-314V8	93315-314V8	COJINETE	BEARING	CUSCINETTO	PALIER
34	PAF15-06000006	63V-45536-00	CAMISA EJE	SLEEVE, DRIVE	TUBO GUIDA	TUBE GUIDE
35	PAF15-06030000S	63V-44150-00	VARILLA SELECTOR S	CAM ASSY, SHIFT ROD S	ASTICELLA CAMBIO S	LEVIER DE VITESSE S
	PAF15-06030000L	63V-44150-10	VARILLA SELECTOR L	CAM ASSY, SHIFT ROD L	ASTICELLA CAMBIO L	LEVIER DE VITESSE L
36	PAGB/T5783-M8X25	97080-08025	TORNILLO	SCREW	VITE	VIS
37	REC93210-06ME6	93210-06ME6	TÓRICA	O-RING	O-RING	JOINT TORIQUE
38	REC63V-45331-00-5B	63V-45331-00-5B	CUERPO DEL COJINETE	SHELL, BEARING	CORPO DE CUSCINETTO	LOGEMENT DE PALIER
39	REC626-45316-09	626-45316-09	CASQUILLO EJE	BUSHER, SHAFT	GOMMINO ASSE	DOUILLE
40	PAF15-06020005	63V-45375-00	RETÉN DE GOMA	SEAL, RUBBER	TENUTA IN COMMA	JOINT DE COUTCHOUC
41	REC93101-20048	93101-20048	RETÉN DE ACEITE	OIL SEAL	PARAOLIO	JOINT SPI
42	PAF15-06040000S	63V-45510-00	EJE VERTICAL S	DRIVE SHAFT S	ASSE VERTICALE S	ARBRE DE COMMANDE S
	REC63V-45501-10	63V-45510-11	EJE VERTICAL L	DRIVE SHAFT L	ASSE VERTICALE L	ARBRE DE COMMANDE L
43	REC664-44338-00	664-44338-00	CUÑA	KEY WOODRUFF	CHIAVETTA	CLAVETTE
44	REC63V-44323-00	63V-44323-00	JUNTA TAPA BOMBA AGUA	GASKET, WATER PUMP COVER	GUARNIZIONE COPERCHIO	JOINT COUVERCLE
45	REC93210-44398	93210-44398	TÓRICA	O-RING	O-RING	JOINT TORIQUE
46	REC63V-44352-01	63V-44352-01	TURBINA	IMPELLER	GIRANTE	TURBINE
47	REC63V-44322-00	63V-44322-00	TAPA, BOMBA AGUA	COVER, INNER WATER PUMP	COPERCHIO, POMPE DACQUA	INSERT DE POMPE À EAU
48	REC63V-44301-00	63V-44301-00	CUERPO DE BOMBA	PUMP HOUSING	CORPO POMPA	CORPS DE POMPE À EAU
49	PAF15-00000013	93604-12M07	PASADOR	PIN	SPINOTTO	PIN
50	REC647-44366-00	647-44366-00	TUBO GOMA BOMBA AGUA	RUBBER TUBE, WATER PUMP	TUBO IN GOMMA, POMPA	DURITE COUTCHOUC
51	PAF15-06000014	63V-44328-00	PLACA	OUT PLATE	PIASTRA	PLAQUE
52	REC97080-08045	97080-08045	PERNO	STUD	BULLONE	BOULON
53	PAF15-02000005S	66M-44361-00	TUBO DE AGUA S	WATER TUBE S	TUBO DELL'ACQUA S	DURITE D'EAU S
	PAF15-02000005L	66M-44361-10	TUBO DE AGUA L	WATER TUBE L	TUBO DELL'ACQUA L	DURITE D'EAU L
54	PAF15-02000006	63V-44365-10	GOMA DEL TUBO DE AGUA	I-SHAPED RUBBER BAND	GOMMA TUBO ACQUA	PLOT CAOUTCHOUC DE TUBE D'EAU

4T STROKES F9.9H • F13.5B • F15C/M/E • F20B/E/M

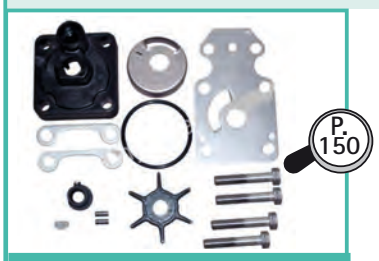

REF	OEM
REC6AH-W0078-00	6AH-W0078-00 6AH-W0078-01

	REF	OEM				
	PAF20-04000000L	6AH-45300-10-8D	COLA COMPLETA L	COMPLETE GEAR HOUSING L	PIEDE COMPLETO L	EMBASE COMPLETE L
	PAF20-04000000S	6AH-45300-00-8D	COLA COMPLETA S	COMPLETE GEAR HOUSING S	PIEDE COMPLETO S	EMBASE COMPLETE S
1	REC90430-08020	90430-08003	ARANDELA	WASHER	RONDELLA	RONDELLE
2	REC90340-08002	90340-08002	TAPÓN ACEITE	PLUG, OIL	TAPPO OLIO	BOUCHON REMPLISSAGE D'HUILE
3	PAF15-00000013	93604-12M07	PIN CENTRADOR	HOLLOW PIN	SPINOTTO DI CENTRAGGIO	PIN DE CENTRAGE
4	PAF20-04000001	69G-45315-A0	JUNTA	GASKET	GUANIZIONE	JOINT
5	PAF15-06020005	63V-45375-00	RETÉN DE GOMA	SEAL, RUBBER	TENUTA IN COMMA	JOINT CAOUTCHOUC
6	REC93315-314V8	93315-314V8	RODAMIENTO	BALL BEARING	CUSCINETTO	ROULEMENT À BILLE
7	PAF15-06000006	63V-45536-00	CAMISA EJE	SLEEVE, DRIVE	TUBO GUIDA	TUBE GUIDE
8	PAF20-04010001	69G-45331-01-CA	CUERPO DEL COJINETE	SHELL, BEARING	CORPO DE CUSCINETTO	LOGEMENT DE PALIER
9	REC626-45316-09	626-45316-09	CASQUILLO EJE	BUSHER, SHAFT	GOMMINO ASSE	DOUILLE
10	REC93101-20048	93101-20001	RETÉN DE ACEITE	OIL SEAL	PARAOLIO	JOINT D'HUILE
11	PAF20-04020000S PAF20-04020000L	6AH-44150-00 6AH-44150-10	VARILLA SELECTOR S VARILLA SELECTOR L	CAM ASSY, SHIFT ROD S CAM ASSY, SHIFT ROD L	ASTICELLA CAMBIO S ASTICELLA CAMBIO L	LEVIER DE VITESSE S LEVIER DE VITESSE L
12	REC93210-06ME6	93210-06ME6	TÓRICA	O-RING	O-RING	JOINT TORIQUE
13	PAGB/T5783-M8X25	97080-08025	TORNILLO	SCREW	VITE	VIS

	REF	OEM				
14	PAF20-04030000L	6AH-45510-10	EJE VERTICAL **L**	DRIVE SHAFT **L**	ASSE VERTICALE **L**	ARBRE DE COMMANDE **L**
	PAF20-04030000S	6AH-45510-00	EJE VERTICAL **S**	DRIVE SHAFT **S**	ASSE VERTICALE **S**	ARBRE DE COMMANDE **S**
15	REC664-44338-00	664-44338-00	CUÑA	KEY WOODRUFF	CHIAVETTA	CLAVETTE
16	REC68T-44323-00	68T-44323-00	JUNTA TAPA BOMBA AGUA	GASKET, WATER PUMP COVER	GUARNIZIONE COPERCHIO	JOINT COUVERCLE
17	REC93210-49046	93210-49046	TÓRICA	O-RING	O-RING	JOINT TORIQUE
18	REC63V-44352-01	63V-44352-01	TURBINA BOMBA AGUA	IMPELLER, WATER PUMP	GIRANTE POMPA	TURBINE DE POMPE À EAU
19	REC63V-44322-00	63V-44322-00	TAPA, BOMBA AGUA	COVER, INNER WATER PUMP	COPERCHIO, POMPE ACQUA	COUVERCLE DE POMPE À EAU
20	PAF15-00000013	93604-12M07	PASADOR BOMBA AGUA	PIN, WATER PUMP	SPINOTTO POMPA ACQUA	LEVIER POMPE D'EAU
21	PAF20-04040001	6AH-44311-00	CUERPO BOMBA AGUA	HOUSING, WATER PUMP	CORPO POMPA	CORPS DE POMPE À EAU
22	PAF25-04050004	6L2-44367-00	TUBO GOMA BOMBA AGUA	RUBBER TUBE, WATER PUMP	TUBO IN GOMMA, POMPA	DURITE DE COUTCHOUC
23	PAF15-06000014	63V-44328-01	PLACA	OUT PLATE	PIASTRA	PLAQUE
24	REC97095-08045	97095-08045	PERNO	STUD	BULLONE	BOULON
25	PAF20-02000005	6AH-44368-00	TUBO DE AGUA	WATER TUBE	TUBO DELL'ACQUA	DURITE D'EAU
26	PAF20-02000101L	6AH-44361-11	TUBO DE AGUA **L**	WATER TUBE **L**	TUBO DELL'ACQUA **L**	DURITE D'EAU **L**
	PAF20-02000101S	6AH-44361-01	TUBO DE AGUA **S**	WATER TUBE **S**	TUBO DELL'ACQUA **S**	DURITE D'EAU **S**
27	PAF20-02000007	6AH-44365-00	GOMA DEL TUBO DE AGUA	I-SHAPED RUBBER BAND	GOMMA TUBO ACQUA	PLOT CAOUTCHOUC DE TUBE D'EAU
28	PAHT-2.5X50	90465-11M10	BRIDA 2,5X50	CLAMP	FASCETTA	COLLIER RILSAN 2,5X50
29	PAF15-06000010-1	664-45567-01	GRUESO 0.10 mm	SHIM 0.10 mm	SPESSORE 0.10 mm	CALE 0.10 mm
	PAF15-06000010-2	664-45567-10	GRUESO 0.12 mm	SHIM 0.12 mm	SPESSORE 0.12 mm	CALE 0.12 mm
	PAF15-06000010-3	664-45567-20	GRUESO 0.15 mm	SHIM 0.15 mm	SPESSORE 0.15 mm	CALE 0.15 mm
	PAF15-06000010-4	664-45567-30	GRUESO 0.18 mm	SHIM 0.18 mm	SPESSORE 0.18 mm	CALE 0.18 mm
	PAF15-06000010-5	664-45567-40	GRUESO 0.30 mm	SHIM 0.30 mm	SPESSORE 0.30 mm	CALE 0.30 mm
	PAF15-06000010-6	664-45567-50	GRUESO 0.40 mm	SHIM 0.40 mm	SPESSORE 0.40 mm	CALE 0.40 mm
	PAF15-06000010-7	664-45567-60	GRUESO 0.50 mm	SHIM 0.50 mm	SPESSORE 0.50 mm	CALE 0.50 mm
30	REC93332-00005	93332-00005	RODAMIENTO	BALL BEARING	CUSCINETTO	ROULEMENT À BILLE
31	REC6E7-45560-01	6E7-45560-01	PIÑÓN MARCHA AVANTE	POSITIVE GEAR ASSY	PIGNONE MARCIA AVANTI	PIGNON DE MARCHE AVANT
32	REC650-45635-00	650-45635-00	ÉMBOLO	PLUNGER	BULLONE	BOUCHON
33	REC682-45631-00	682-45631-00	SELECTOR	CLUTCH BLOCK	SELETTORE	SELECTEUR
34	REC90250-05010	90250-05010	PASADOR	PIN	SPINOTTO	LEVIER
35	REC648-45633-00	648-45633-11	MUELLE	SPRING	MOLLA	RESSORT
36	PAF15-06070002	90501-150A0	MUELLE	SPRING	MOLLA	RESSORT
37	REC683-45611-00	683-45611-00	EJE HÉLICE	PROPELLER SHAFT	ASSE ELICA	ARBRE D'HELICE
38	REC90201-17682	90201-17682	ARANDELA	WASHER	RONDELLA	RONDELLE
39	REC6E7-45570-00	6E7-45570-00	PIÑÓN MARCHA ATRÁS	REVERSE GEAR	PIGNONE MARCIA INDIETRO	PIGNON MARCHE ARRIÈRE
40	PAF15-06080006-1	626-45577-00	GRUESO 0.10 mm	SHIM 0.10 mm	SPESSORE 0.10 mm	CALE 0.10 mm
	PAF15-06080006-2	626-45577-10	GRUESO 0.20 mm	SHIM 0.20 mm	SPESSORE 0.20 mm	CALE 0.20 mm
	PAF15-06080006-3	626-45577-20	GRUESO 0.30 mm	SHIM 0.30 mm	SPESSORE 0.30 mm	CALE 0.30 mm
	PAF15-06080006-4	626-45577-30	GRUESO 0.40 mm	SHIM 0.40 mm	SPESSORE 0.40 mm	CALE 0.40 mm
	PAF15-06080006-5	626-45577-40	GRUESO 0.50 mm	SHIM 0.50 mm	SPESSORE 0.50 mm	CALE 0.50 mm
41	PAF15-06080000	683-45361-02-8D	FUNDA INFERIOR COMPLETA	COVER ASSY, LOWER CASING	COVER INFERIORE COMPLETA	DIABOLO COMPLET
42	REC93306-00501	93306-00501	COJINETE	BEARING	CUSCINETTO	ROULEMENT
43	REC93210-57M09	93210-57M09	TÓRICA	O-RING	O-RING	JOINT TORIQUE
44	PAF15-06080003	93210-56M80	TÓRICA	O-RING	O-RING	JOINT TORIQUE
45	REC683-45361-01-4D	683-45361-02-8D	DIÁBOLO	CAP, LOWER CASING	COPERCHIO CARTER INFERIORE	DIABOLO
46	PAGB/T5783-M6X20	97575-06520	TORNILLO	SCREW	VITE	VIS
47	REC93315-317U2	93315-317U2	COJINETE	BEARING	CUSCINETTO	PALIER
48	REC93101-17054	93101-17054	RETÉN DE ACEITE	OIL SEAL	PARAOLIO	JOINT SPI
49	REC6E7-45987-00	6E7-45987-01	ESPACIADOR	SPACER	DISTANZIALE	ENTRETOISE
50	PAGB/T96-10	90201-10M01	ARANDELA	WASHER	RONDELLA	RONDELLE
51	REC90171-10M01	90171-10M01	TUERCA	LOCK NUT	DADO	ÉCROU
52	REC91490-30025	94190-30020	PASADOR ALETAS	PIN, COTTER	PIN	GOUPILLE
53	PAGB/T6182-M5	90185-05002	TUERCA	LOCK NUT	DADO	ÉCROU
54	PAF15-06000002	63V-45215-00	CUBIERTA, ENTRADA AGUA **2**	WATER INLET **A**	COPERCHIO ENTRATA ACQUA **A**	GRILLE D'ENTREE D'EAU **A**
55	PAF15-06000003	6G1-45214-00	CUBIERTA, ENTRADA AGUA **1**	WATER INLET **B**	COPERCHIO ENTRATA ACQUA **B**	GRILLE D'ENTREE D'EAU **B**
56	PAGB/T820-M5X20	90152-05011	TORNILLO	SCREW	VITE	VIS
57	PAF15-06000020-1	90201-15017	ARANDELA	WASHER	RONDELLA	RONDELLE
58	PAF15-06000008	6E8-45587-10	GRUESO 1.13 mm	SHIM 1.13 mm	SPESSORE 1.13 mm	CALE 1.13 mm
	PAF15-06000009	6E8-45587-30	GRUESO 1.20 mm	SHIM 1.20 mm	SPESSORE 1.20 mm	CALE 1.20 mm
59	REC63V-45551-00	63V-455551-00	PIÑÓN ATAQUE	INITIATIVE GEAR	MARCIA INIZIATIVA	PIGNON D'ATTAQUE
60	REC90179-08M06	90179-08M06	TUERCA	LOCK NUT	DADO	ÉCROU
61	PAGB/T5783-M8X30	97575-08530	PERNO	STUD	BULLONE	BOULON
62	TEN01154AL	6AH-45251-00	ÁNODO	ANODE	ANODO	ANODE
63	PAGB/T861.1-6	92990-06300	ARANDELA	WASHER	RONDELLA	RONDELLE
64	PAGB/T5783-M6X30	95895-06035	TORNILLO	SCREW	VITE	VIS

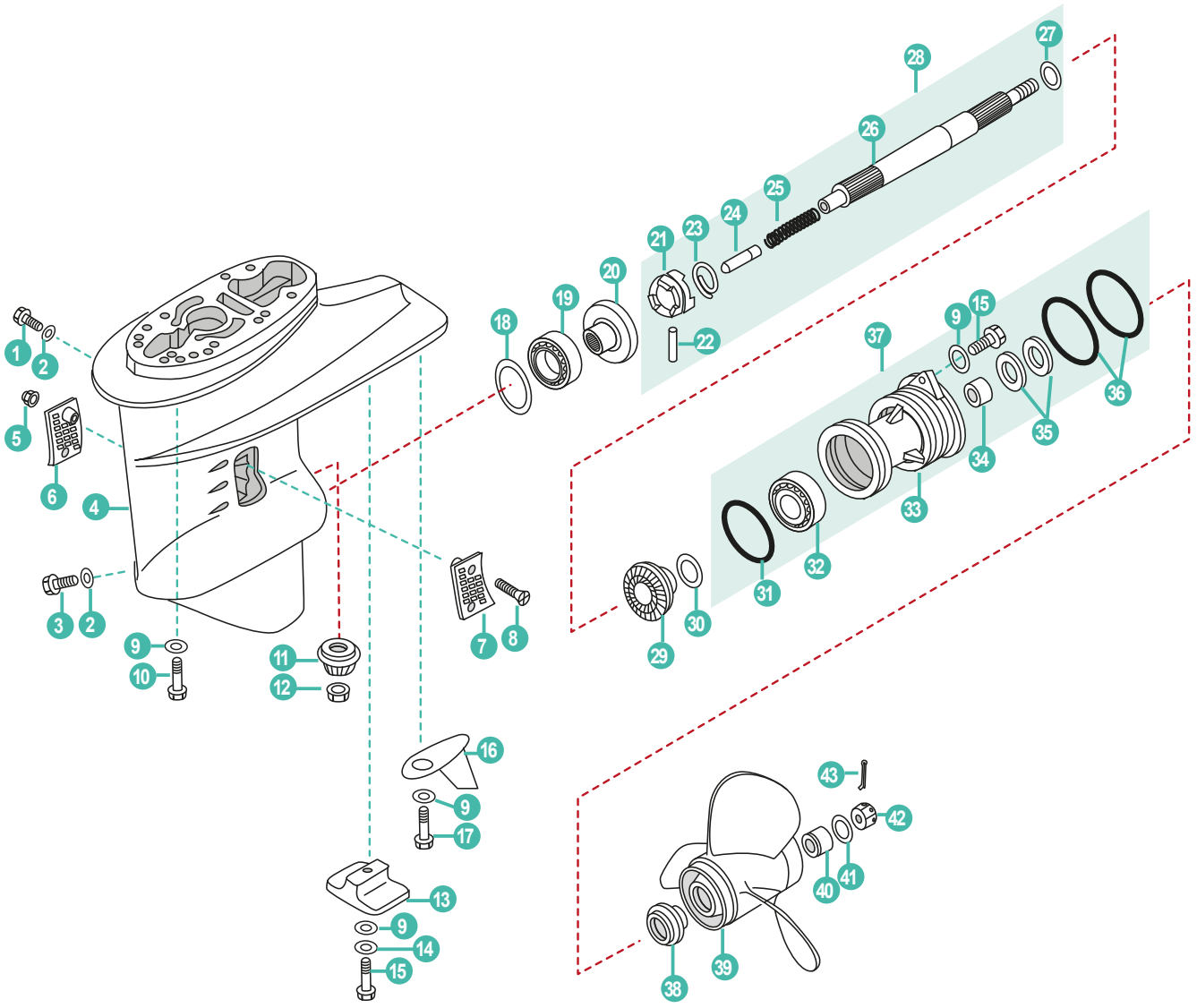



REC80W90U3
REC80W90U6
RECGREU1
RECGREU12

P. 43

	REF	OEM				
	PAF25-04090000L	65W-45300-10-4D	COLA COMPLETA **L**	COMPLETE GEAR HOUSING **L**	PIEDE COMPLETO **L**	EMBASE COMPLETE **L**
	PAF25-04090000S	65W-45300-00-4D	COLA COMPLETA **S**	COMPLETE GEAR HOUSING **S**	PIEDE COMPLETO **S**	EMBASE COMPLETE **S**
1	REC90340-08002	90340-08M04	TAPÓN ACEITE	PLUG, OIL	TAPPO OLIO	BOUCHON REMPLISSAGE D'HUILE
2	REC90430-08020	93210-06ME6	JUNTA	GASKET	GUANIZIONE	JOINT
3	REC688-45341-00	688-45341-00	TAPÓN DE DESAGÜE	PLUG, DRAIN	TAPPO DRENAGGIO	BOUCHON DE VIDANGE
4	PAF25-04000001	61N-45311-02-4D	CARTER	LOWER CASING	CARTER	CARTER D'EMBASE
5	PAGB/T889.1-2000	90185-05002	TUERCA	NUT, LOCKING	DADO	ÈCROU
6	PAF25-04000023	6L2-45215-00	CUBIERTA ENTRADA AGUA **B**	WATER INLET **B**	COPERCHIO ACQUA **B**	GRILLE D'ENTREE D'EAU **B**
7	PAF25-04000022	6L2-45214-00	CUBIERTA ENTRADA AGUA **A**	WATER INLET **A**	COPERCHIO ACQUA **A**	GRILLE D'ENTREE D'EAU **A**
8	PAGB/T820-M5X30	90151-05M05	TORNILLO	SCREW, PAN HEAD	VITE	VIS
9	PAGB/T97.1-8	92995-10600	ARANDELA	WASHER	RONDELLA	RONDELLE
10	PAF25-00000011	90105-10M12	TORNILLO	BOLT	VITE	VIS
11	PAF25-04000005	61N-45551-00	PIÑÓN ATAQUE	INITIATIVE GEAR	MARCIA INIZIATIVA	PIGNON D'ATTAQUE
12	REC90179-10M14	90179-10M14	TUERCA	NUT, PINION	DADO	ÈCROU
13	PAF15-06000004	61N-45251-00	ÁNODO	ANODE, LOWER	ANODO	ANODE
14	PAGB/T861.1-87	92990-06300	ARANDELA	WASHER, LOCKING	RONDELLA	RONDELLE
15	PAGB/T5782-M6X125	95895-06035	TORNILLO	BOLT	VITE	VIS
16	PAF25-04000021	61N-45214-00	PLACA TIMÓN	TAB, COURSE	PIASTRA TIMONE	DERIVE
17	PAGB/T5783-M5X12	90119-06M48	TORNILLO	BOLT	VITE	VIS
18	PAF25-04000004-3 PAF25-04000004-5	6L2-45567-12 6L2-45567-14	GRUESO 1.2 mm GRUESO 1.4mm	SHIM 1.2 mm SHIM 1.4 mm	SPESSORE 1.2 mm SPESSORE 1.4 mm	CALE 1.2 mm CALE 1.4 mm
19	REC93332-00005	93332-00005	RODAMIENTO	BALL BEARING	CUSCINETTO	ROULEMENT À BILLE
20	REC61N-45560-10	61N-45560-00	PIÑÓN MARCHA AVANTE	POSITIVE GEAR ASSY	PIGNONE MARCIA AVANTI	PIGNON DE MARCHE AVANT
21	PAF25-04060003	664-45631-02	SELECTOR	CLUTCH BLOCK	SELETTORE	CRABOT
22	REC90250-05010	90250-05010	PASADOR	PIN	SPINOTTO	LEVIER
23	REC648-45633-00	648-45633-00	MUELLE	SPRING	MOLLA	RESSORT
24	REC648-45635-00	648-45635-00	ÉMBOLO	PLUNGER	BULLONE	BOUCHON
25	PAF25-04060002	90501-10065	MUELLE	SPRING	MOLLA	RESSORT
26	REC6L2-45611-00	612-45611-00	EJE HÉLICE	PROPELLER SHAFT	ASSE ELICA	ARBRE D'HELICE
27	PAF25-04060007	90201-20417	GRUESO	SHIM	SPESSORE	CALE
28	PAF25-04060000	648-45633-11	EJE HÉLICE COMPELTO	PROPELLER, SHAFT ASSY	ASSE ELICHE COMPLETO	ARBRE D'HELICE COMPLÈTE
29	PAF25-04070004	61N-45571-00	PIÑÓN MARCHA INVERSA	GEAR, REVERSE	MARCIA INDIETRO	PIGON MARCHE ARRIÈRE
30	PAF25-04070005-1 PAF25-04070005-3	6L2-45577-00-10 6L2-45577-00-12	GRUESO 1.0 mm GRUESO 1.2 mm	SHIM 1.0 mm SHIM 1.2 mm	SPESSORE 1.0 mm SPESSORE 1.2 mm	CALE 1.0 mm CALE 1.2 mm
31	REC93210-64ME7	93210-64ME7	TÓRICA	O-RING	O-RING	JOINT TORIQUE
32	PAGB/T276-6006/P6	93306-00612	RODAMIENTO	BALL BEARING	CUSCINETTO	ROULEMENT À BILLE
33	PAF25-04070001	61N-45361-01-4D	DIÁBOLO	CAP, LOWER CASING	COPERCHIO CARTER INFERIORE	DIABOLO
34	REC93315-22004	93315-22004	RODAMIENTO	BALL BEARING	CUSCINETTO	ROULEMENT À BILLE
35	REC93101-20M07	93101-20M07	RETÉN DE ACEITE	OIL SEAL	PARAOLIO	JOINT SPI
36	REC93210-65M50	93210-65M50	TÓRICA	O-RING	O-RING	JOINT TORIQUE
37	PAF25-04070000	61N-45361-01-8D	TAPA CÁRTER COMPLETA	COVER ASSY, LOWER CASING	COPERCHIO CARTER COMPLETA	DIABOLO COMPLET
38	REC6L2-45987-00	6L2-45987-01	ESPACIADOR	SPACER, PROPELLER	SPESSORE	ENTRETOISE
39	PAF25-04080000	664-45947-01-EL	HÉLICE	PROPELLER ASSY	ELICHE	HELICE
40	REC689-45997-00	689-45997-00	ESPACIADOR	SPACER	SPESSORE	ENTRETOISE
41	PAGB/T97.1-8	92990-14200	ARANDELA	WASHER	RONDELLA	RONDELLE
42	REC90171-14013-00	90171-14013	TUERCA	NUT	DADO	ÈCROU
43	PAGB/T91-1.6X12	91490-30022	PIN	PIN, COTTER	SPINOTTO	GOUPILLE

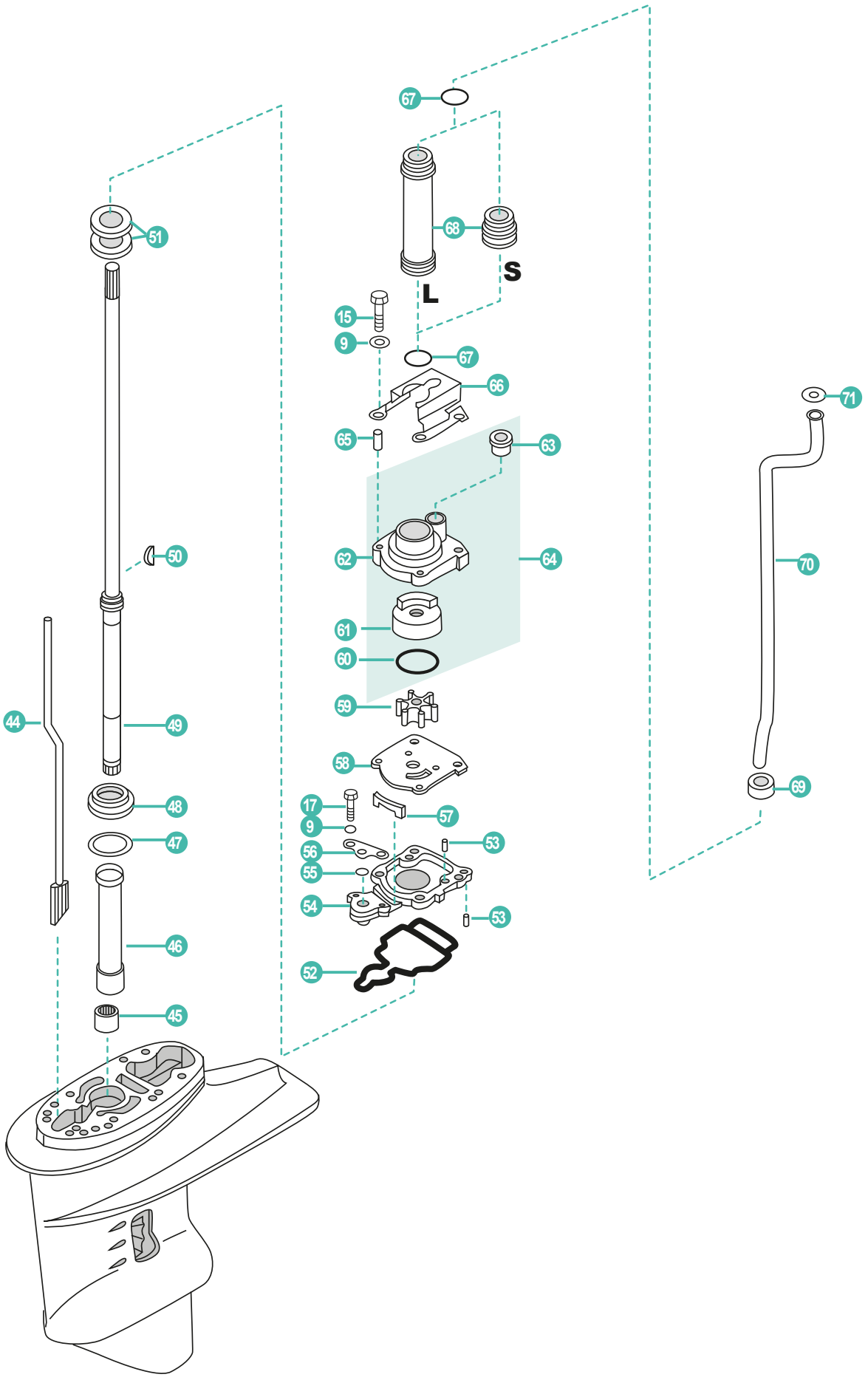
67
68
L
S
15
9
67
66
65
63
62
64
61
60
59
58
17
9
57
56
53
55
54
53
52
51
50
44
49
48
47
46
45
71
70
69

	REF	OEM				
44	PAF25-04030000L PAF25-04030000S	65W-44150-10 65W-44150-00	VARILLA SELECTOR L VARILLA SELECTOR S	CAM ASSY, SHIFT ROD L CAM ASSY, SHIFT ROD S	ASTICELLA CAMBIO L ASTICELLA CAMBIO S	LEVIER DE VITESSE L LEVIER DE VITESSE S
45	PAGB/T290F-2020	93315-220V7	RODAMIENTO	BALL BEARING	CUSCINETTO	ROULEMENT À BILLE
46	PAF25-04000002	61N-45536-00	CASQUILLO	BUSHING, NYLON	GHIERA	BAGUE NYLON
47	PAF25-04000003-2	61N-45587-00-10	GRUESO 1.0 mm	SHIM 1.0 mm	SPESSORE 1.0 mm	CALE 1.0 mm
	PAF25-04000003-3	61N-45587-00-11	GRUESO 1.1 mm	SHIM 1.1 mm	SPESSORE 1.1 mm	CALE 1.1 mm
	PAF25-04000003-4	61N-45587-00-12	GRUESO 1.2 mm	SHIM 1.2 mm	SPESSORE 1.2 mm	CALE 1.2 mm
	PAF25-04000003-5	61N-45587-00-13	GRUESO 1.3 mm	SHIM 1.3 mm	SPESSORE 1.3 mm	CALE 1.3 mm
	PAF25-04000003-6	61N-45587-00-14	GRUESO 1.4mm	SHIM 1.4 mm	SPESSORE 1.4 mm	CALE 1.4 mm
	PAF25-04000003-7	61N-45587-00-15	GRUESO 1.5mm	SHIM 1.5 mm	SPESSORE 1.5 mm	CALE 1.5 mm
48	PAHI-CAP32004JRKOYO	93332-000W5	CUERPO RODAMIENTO	HOUSING, BEARING	CORPO CUSCINETTO	LOGEMENT DE ROULEMENT
49	PAF25-04010000L PAF25-04010000S	61N-45510-10 61N-45510-00	EJE VERTICAL L EJE VERTICAL S	DRIVE SHAFT L DRIVE SHAFT S	ASSE VERTICALE L ASSE VERTICALE S	ARBRE DE COMMANDE L ARBRE DE COMMANDE S
50	PAF25-04000015	90280-03024	CHAVETA	KEY WOODRUFF	CHIAVETTA	CLAVETTE
51	REC93101-22M00	93101-22067	RETÉN DE ACEITE	OIL SEAL	PARAOLIO	JOINT D'HUILE
52	PAF25-04000009	61N-45315-00	RETÉN	SEAL	TENUTA	JOINT
53	PAF25-04000007	93604-10M03	PIN	PIN, COTTER	SPINOTTO	PLOT DE CENTRAGE F4X12
54	PAF25-04000008	65W-45331-00-5B	BASE EJE VERTICAL	BASE, DRIVE SHAFT	BASE, ASSE VERTICALE	BASE POUR ARBRE D'ENTRAINEMENT
55	REC93210-06ME6	93210-06ME6	TÓRICA	O-RING	O-RING	JOINT TORIQUE
56	PAF25-04000012	65W-44176-00	PLACA	OUT PLATE	PIASTRA	PLAQUE
57	PAF25-04000013	61N-45127-00	RETÉN AGUA	WATER SEAL	PARAOLIO ACQUA	RONDELLE JOINT
58	REC61N-44323-00	61N-44323-00	JUNTA TAPA BOMBA AGUA	GASKET, WATER PUMP COVER	GUARNIZIONE COPERCHIO	JOINT COUVERCLE
59	REC6H4-44352-02	6H4-44352-02	TURBINA BOMBA AGUA	IMPELLER, WATER PUMP	GIRANTE POMPA	TURBINE DE POMPE À EAU
60	PAF25-04050003	93210-45161	TÓRICA	O-RING	O-RING	JOINT TORIQUE
61	REC61N-44322-00	61N-44322-01	ACOPLE INOX	INSERT CARTRIDGE	ACCOPPIAMENTO INOX	INSERT DE POMPE À EAU
62	PAF25-04050001	61N-44311-01	CUERPO BOMBA	SHELL, WATER PUMP	CORPO POMPA	CORPS DE POMPE À EAU
63	PAF25-04050004	6L2-44367-00	RETÉN TUBO AGUA	DAMPER, WATER PIPE	AMMORTIZZATORE, TUBO DELL'ACQUA	MANCHON TUYAU D'EAU
64	PAF25-04050000	61N-44311-01	KIT CUERPO BOMBA	SHELL ASSY, WATER PUMP	KIT CORPO POMPA	KIT COPRS DE POMPE À EAU
65	REC93606-12019	93606-11M24	PIN	PIN, DOWEL	SPINOTTO	PLOT DE CENTRAGE
66	PAF25-04000016	65W-44328-00	PLATO FIJO BOMBA AGUA	FIXED PLATE, WATER PUMP	PIASTRA POMPA	PLAQUE FIXATION CORPS DE POMPE À EAU
67	PAGB/T3452.1-25.8X2	93210-26130	TÓRICA	O-RING	O-RING	JOINT TORIQUE
68	PAF25-04000017 PAF25-04000017S	61N-44362-10 61N-44362-00	TUBO DE AGUA L TUBO DE AGUA S	WATER TUBE L WATER TUBE S	TUBO DELL'ACQUA L TUBO DELL'ACQUA S	DURITE D'EAU L DURITE D'EAU S
69	PAF25-02000005	90430-12072	JUNTA AGUA	GASKET, WATER PIPE	GUARNIZIONE	JOINT
70	PAF25-02000004L PAF25-02000004S	65W-44361-10 65W-44361-00	TUBO DE AGUA L TUBO DE AGUA S	WATER TUBE L WATER TUBE S	TUBO DELL'ACQUA L TUBO DELL'ACQUA S	DURITE D'EAU L DURITE D'EAU S
71	PAF25-02000019	90202-12060	ARANDELA	WASHER, NYLON	RONDELLA	RONDELLE



P. 145

REF	OEM
REC65W-W0001-20	65W-W0001-20

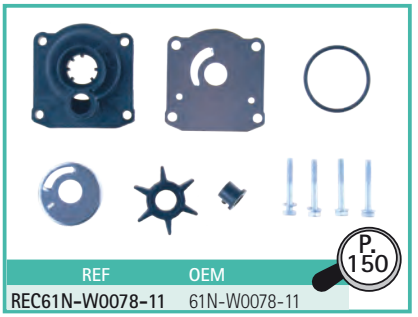

P. 150

REF	OEM
REC61N-W0078-11	61N-W0078-11

4T STROKES F30A/E/M • F40B/E/T

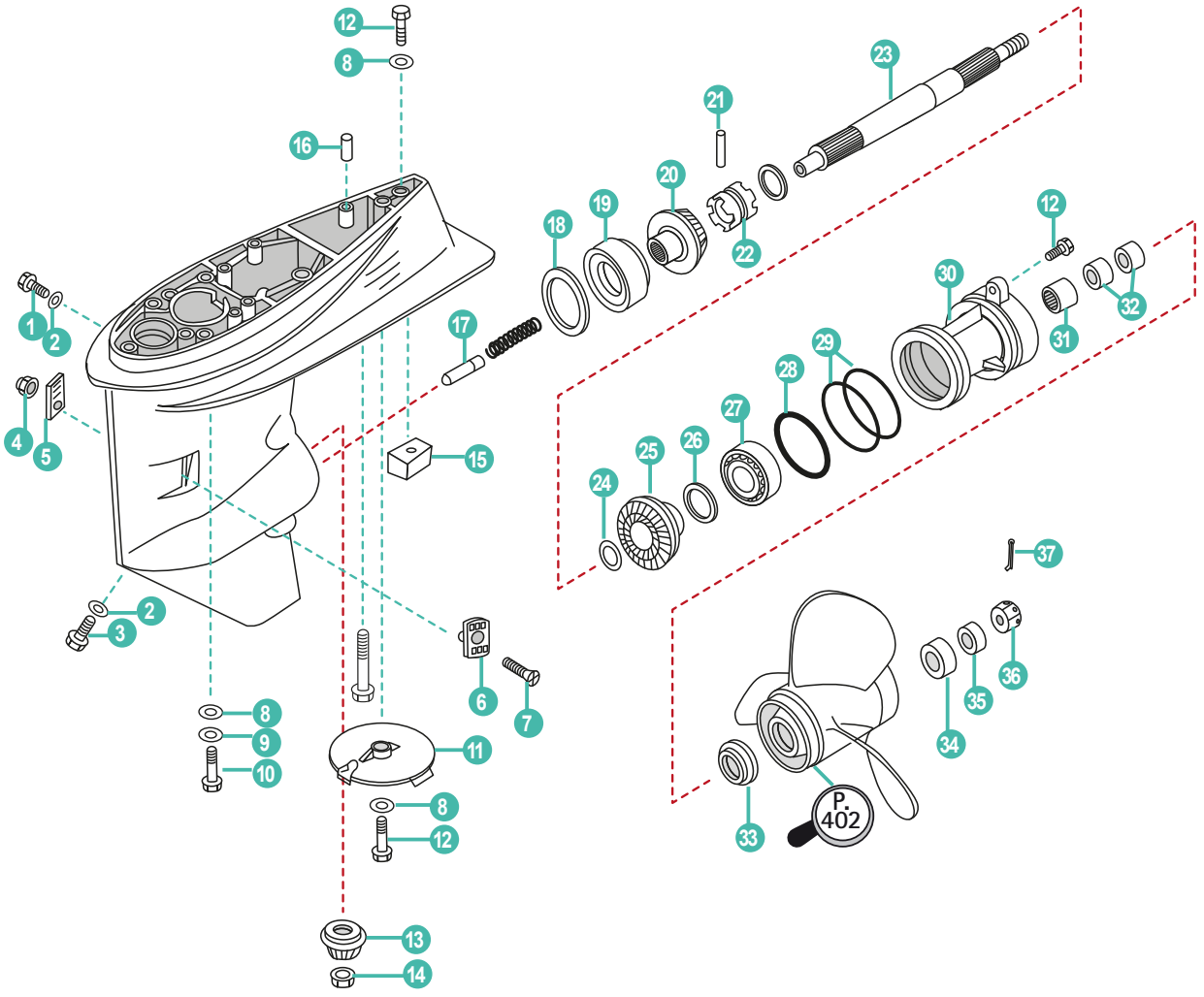

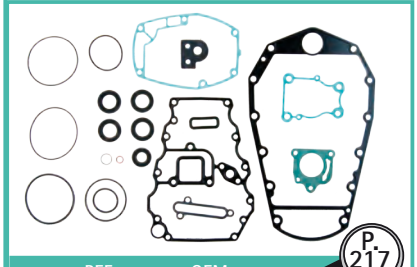

REF	OEM
REC67C-W0001-20	67C-W0001-20

P. 217



REF	OEM
REC66T-W0078-00	66T-W0078-00

P. 152



REF
REC80W90U3
REC80W90U6
RECGREU1
RECGREU12

P. 43

	REF	OEM				
1	REC90340-08002	90340-08002	TAPÓN ACEITE	PLUG, OIL	TAPPO OLIO	BOUCHON DE NIVEAU D'HUILE
2	REC90430-08020	90430-08020	JUNTA	GASKET	GUARNIZIONE	JOINT
3	REC688-45341-00	688-45341-10	TAPÓN ACEITE	PLUG, OIL	TAPPO OLIO	BOUCHON REMPLISSAGE D'HUILE
4	PAGB/T889.1-M5	95380-05600	TUERCA	LOCK NUT	DADO	ÉCROU
5	PAT40-04000023	63D-45215-00	CUBIERTA ENTRADA AGUA **B**	WATER INLET **B**	COPERCHIO ACQUA **B**	GRILLE D'ENTREE D'EAU **B**
6	PAT40-04000022	63D-45214-00	CUBIERTA ENTRADA AGUA **A**	WATER INLET **A**	COPERCHIO ACQUA **A**	GRILLE D'ENTREE D'EAU **A**
7	PAGB/T820-M5X30	90142-05M06	TORNILLO	SCREW	VITE	VIS
8	PAGB/T97.1-8	92995-10600	ARANDELA	WASHER	RONDELLA	RONDELLE
9	PAGB/T97.1-10	92995-10100	ARANDELA	WASHER	RONDELLA	RONDELLE
10	REC97075-10040	97075-10040	PERNO	STUD	BULLONE	BOULON
11	CM67C-45371-00A	67C-45371-00	ÁNODO	ANODE	ANODO	ANODE
12	PAGB/T5783-M8X25	97095-08025	PERNO	STUD	BULLONE	BOULON
13	REC66T-45551-00	66T-45551-00	PIÑÓN ATAQUE	INITIATIVE GEAR	MARCIA INIZIATIVA	PIGNON D'ATTAQUE
14	REC90170-12138	90170-12138	TUERCA	LOCK NUT	DADO	ÉCROU
15	CM67C-45251-00A	67C-45251-00	ÁNODO	ANODE	ANODO	ANODE
16	REC93606-12019	93606-12019	PASADOR	PIN	SPINOTTO	LEVIER
17	REC66T-45635-00	66T-45635-00	ÉMBOLO	PLUNGER	BULLONE	BOUCHON
18	PAT40-04000004-1	663-45567-01	GRUESO 0.10 mm	SHIM 0.10 mm	SPESSORE 0.10 mm	CALE 0.10 mm
	PAT40-04000004-2	663-45567-10	GRUESO 0.12 mm	SHIM 0.12 mm	SPESSORE 0.12 mm	CALE 0.12 mm
	PAT40-04000004-3	663-45567-20	GRUESO 0.15 mm	SHIM 0.15 mm	SPESSORE 0.15 mm	CALE 0.15 mm
	PAT40-04000004-5	663-45567-40	GRUESO 0.30 mm	SHIM 0.30 mm	SPESSORE 0.30 mm	CALE 0.30 mm
19	REC93332-00003	93332-00003	COJINETE	BEARING	CUSCINETTO	PALIER
20	REC66T-45560-00	66T-45560-01	PIÑÓN MARCHA AVANTE	POSITIVE GEAR ASSY	PIGNONE MARCIA AVANTI	PIGNON DE MARCHE AVANT
21	REC90250-06023	90250-06023	PASADOR	PIN	SPINOTTO	PIN
22	REC66T-45631-00	66T-45631-00	SELECTOR	CLUTCH BLOCK	SELETTORE	CRABOT
23	REC66T-45611-00	66T-45611-00	EJE HÉLICE	PROPELLER SHAFT	ASSE ELICA	ARBRE D'HELICE
24	REC90201-22429	90201-22429	ARANDELA	WASHER	RONDELLA	RONDELLE
25	REC66T-45571-00	66T-45571-00	PIÑÓN MARCHA ATRÁS	REVERSE GEAR	PIGNONE MARCIA INDIETRO	PIGNON MARCHE ARRIÈRE
26	PAT40-04060005-2	63D-45577-10	GRUESO 0.12 mm	SHIM 0.12 mm	SPESSORE 0.12 mm	CALE 0.12 mm
	PAT40-04060005-3	63D-45577-20	GRUESO 0.15 mm	SHIM 0.15 mm	SPESSORE 0.15 mm	CALE 0.15 mm
	PAT40-04060005-4	63D-45577-30	GRUESO 0.18 mm	SHIM 0.18 mm	SPESSORE 0.18 mm	CALE 0.18 mm
	PAT40-04060005-5	63D-45577-40	GRUESO 0.30 mm	SHIM 0.30 mm	SPESSORE 0.30 mm	CALE 0.30 mm
	PAT40-04060005-6	63D-45577-50	GRUESO 0.40 mm	SHIM 0.40 mm	SPESSORE 0.40 mm	CALE 0.40 mm
	PAT40-04060005-7	63D-45577-60	GRUESO 0.50 mm	SHIM 0.50 mm	SPESSORE 0.50 mm	CALE 0.50 mm
27	REC93306-001U1	93306-001U1	COJINETE	BEARING	CUSCINETTO	PALIER
28	REC93210-69MG6	93210-69MG6	TÓRICA	O-RING	O-RING	JOINT TORIQUE
29	REC93210-74MG5	93210-74MG5	TÓRICA	O-RING	O-RING	JOINT TORIQUE
30	REC63D-45361-02-4D	63D-45361-02-4D	DIÁBOLO	CAP, LOWER CASING	COPERCHIO CARTER INFERIORE	DIABOLO
31	REC93317-22204	93317-22204	COJINETE	BEARING	CUSCINETTO	PALIER
32	REC93101-22M00	93101-22M00	RETÉN DE ACEITE	OIL SEAL	PARAOLIO	JOINT SPI
33	REC663-45987-00	663-45987-02	ESPACIADOR	SPACER	DISTANZIALE	ENTRETOISE
34	REC66T-45997-00	66T-45997-00	ESPACIADOR	SPACER	DISTANZIALE	ENTRETOISE
35	REC90389-22M01	90389-22M01	CASQUILLO HÉLICE	WASHER	GHIERA ELICA	RONDELLE D'HELICE
36	REC90171-16011	90171-16011	TUERCA	LOCK NUT	DADO	ÉCROU
37	REC91490-30025	91490-30025	PASADOR	PIN	SPINOTTO	LEVIER

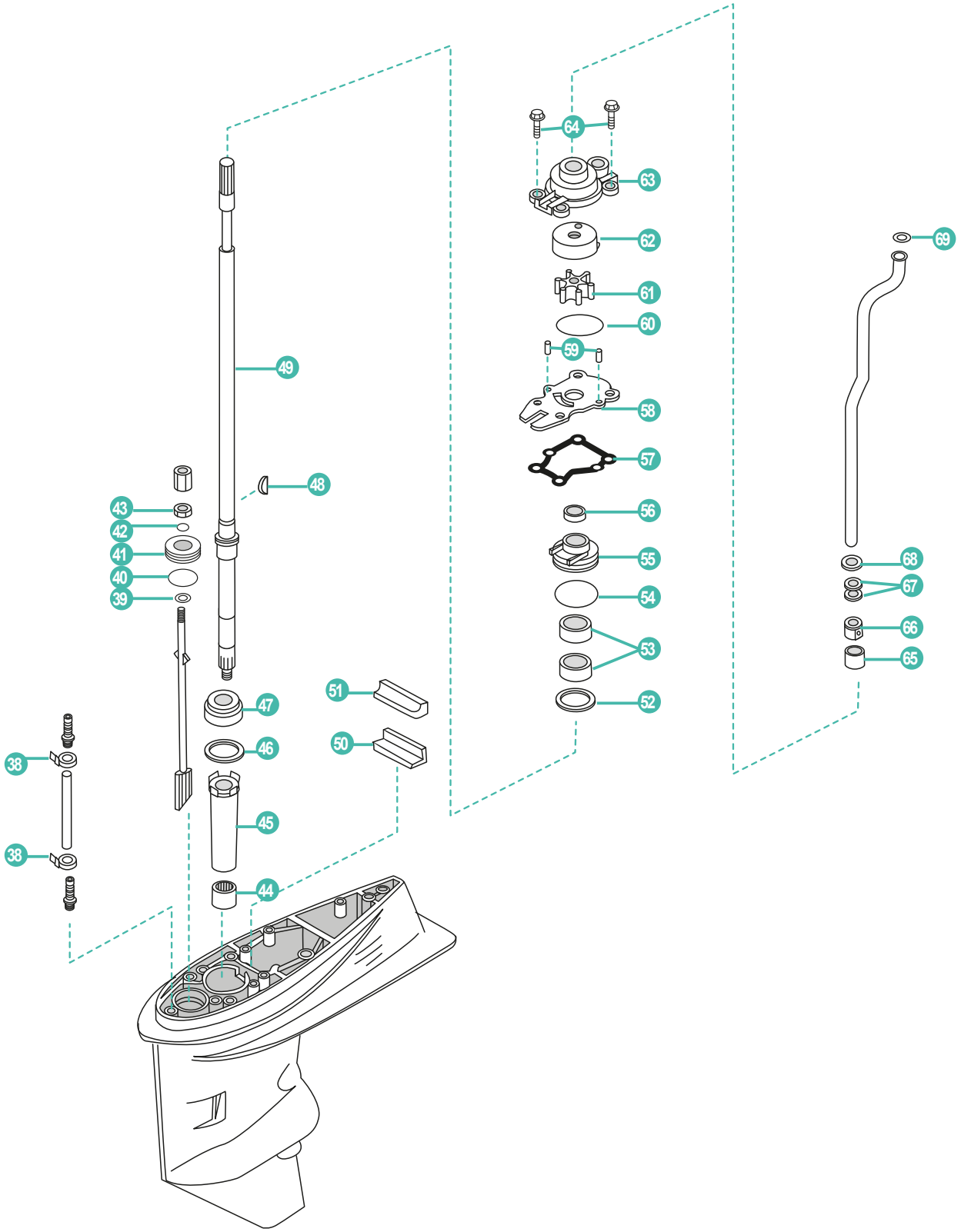
64
63
62
61
60
59
58
57
56
55
54
53
52
69
68
67
66
65
49
48
43
42
41
40
39
47
46
45
44
51
50
38
38

	REF	OEM				
38	PAHT-2.5X60	90465-11M10	BRIDA	CLAMP	FLANGIA	COLLIER
39	PAGB/T97.1-6	92990-06600	ARANDELA	WASHER	RONDELLA	RONDELLE
40	REC93210-33MG4	93210-33MG4	TÓRICA	O-RING	O-RING	JOINT TORIQUE
41	PAT40-04000007	66T-45321-00	PLACA	COVER PLATE, CAMSHAFT	PLACCA	COUVERCLE
42	REC93210-06ME6	93210-06ME6	TÓRICA	O-RING	O-RING	JOINT TORIQUE
43	REC95380-06700	95380-06700	TUERCA	LOCK NUT	DADO	ÉCROU
44	REC93315-32224	93315-32224	COJINETE	BEARING	CUSCINETTO	PALIER
45	PAT40-04000002	6H4-45536-00	CAMISA EJE	SLEEVE, DRIVE	TUBO GUIDA	BAGUE NYLON
	PAT40-04000003-1	663-45587-01	GRUESO 0.10 mm	SHIM 0.10 mm	SPESSORE 0.10 mm	CALE 0.10 mm
	PAT40-04000003-2	663-45587-10	GRUESO 0.12 mm	SHIM 0.12 mm	SPESSORE 0.12 mm	CALE 0.12 mm
	PAT40-04000003-3	663-45587-20	GRUESO 0.15 mm	SHIM 0.15 mm	SPESSORE 0.15 mm	CALE 0.15 mm
46	PAT40-04000003-4	663-45587-30	GRUESO 0.18 mm	SHIM 0.18 mm	SPESSORE 0.18 mm	CALE 0.18 mm
	PAT40-04000003-5	663-45587-40	GRUESO 0.30 mm	SHIM 0.30 mm	SPESSORE 0.30 mm	CALE 0.30 mm
	PAT40-04000003-6	663-45587-50	GRUESO 0.40 mm	SHIM 0.40 mm	SPESSORE 0.40 mm	CALE 0.40 mm
	PAT40-04000003-7	663-45587-60	GRUESO 0.50 mm	SHIM 0.50 mm	SPESSORE 0.50 mm	CALE 0.50 mm
47	REC93332-00001	93332-00001	COJINETE	BEARING	CUSCINETTO	ROULEMENT
48	REC90280-03M03	90280-03M03	CHAVETA	KEY WOODRUFF	CHIAVETTA	CLAVETTE
49	REC67C-45501-10	67C-45501-10	EJE VERTICAL **L**	DRIVE SHAFT **L**	ASSE VERTICALE **L**	ARBRE DE COMMANDE **L**
	REC67C-45501-00	67C-45501-00	EJE VERTICAL **S**	DRIVE SHAFT **S**	ASSE VERTICALE **S**	ARBRE DE COMMANDE **S**
50	REC663-45376-00	663-45376-00-94	GUÍA SELLO DE GOMA	GUIDE RUB. SEAL	GUIDA PARAOLIO	GUIDE
51	PAT40-04000014	63D-45375-00	SELLO DE GOMA	WATER ENVELOP	PARAOLIO	PROTECTION TUYAU D'EAU
52	PAT40-04000008	90201-27M00	ARANDELA	WASHER	RONDELLA	RONDELLE
53	REC93101-22M60	93101-22M60	RETÉN DE ACEITE	OIL SEAL	PARAOLIO	JOINT SPI
54	REC93210-48MG8	93210-48MG8	TÓRICA	O-RING	O-RING	JOINT TORIQUE
55	REC63D-44341-00	63D-44341-00	CUERPO BOMBA DE AGUA	SHELL, WATER PUMP	CORPO POMPA	INSERT POMPE À EAU
56	PAT40-04000009	66T-45344-01	CUBIERTA SELLO DE ACEITE	COVER, OIL SEAL	COPERCHIO, PARAOLIO	JOINT SPI
57	REC63D-44316-00	63D-44316-00	JUNTA	GASKET	GUARNIZIONE	JOINT
58	REC66T-44323-00	66T-44323-00	PLACA EXTERIOR	OUTER PLATE	PIASTRA POMPA ACQUA	PLAQUE DE POMPE À EAU
59	PAF25-04000007	93604-08062	PASADOR	PIN	SPINOTTO	PIN
60	REC93210-59MG7	93210-59MG7	TÓRICA	O-RING	O-RING	JOINT TORIQUE
61	REC6H4-44352-02	6H4-44352-02	TURBINA	IMPELLER	GIRANTE	TURBINE
62	REC63D-44322-00	63D-44322-00	TAPA, BOMBA AGUA	COVER, INNER WATER PUMP	COPERCHIO, POMPE ACQUA	COUVERCLE, POMPE D'EAU
63	PAT40-04000201	66T-44311-00	CUERPO BOMBA AGUA	HOUSING, WATER PUMP	CORPO POMPA	LOGEMENT POMPE D'EAU
64	REC90119-08M15	90119-08M15	TORNILLO CON ARANDELA	SCREW WITH WASHER	VITE CON RONDELLA	VIS AVEC RONDELLE
65	REC663-44366-00	663-44366-00	GOMA DEL SELLO DE AGUA	DAMPER, WATER SEAL	GHIERA	JOINT DE TUBE D'EAU
66	REC63D-44312-00	63D-44312-00	CUBIERTA CAJA DE BOMBA DE AGUA	PUMP COVER	COPERCHIO POMPA ACQUA	PLAQUE POMPE À EAU
67	PAT40-02000002	663-44367-00	GOMA DEL SELLO DE AGUA	GUIDE BUSHING, WATER PIPE	PARAOLIO	MAUCHON CAOUTCHOUC DE PIPE D'EAU
68	REC90430-12072	90430-12072	JUNTA	GASKET	GUARNIZIONE	JOINT
69	PAF25-02000019	90202-12060	ARANDELA PLANA	WASHER	RONDELLA PIANA	RONDELLE

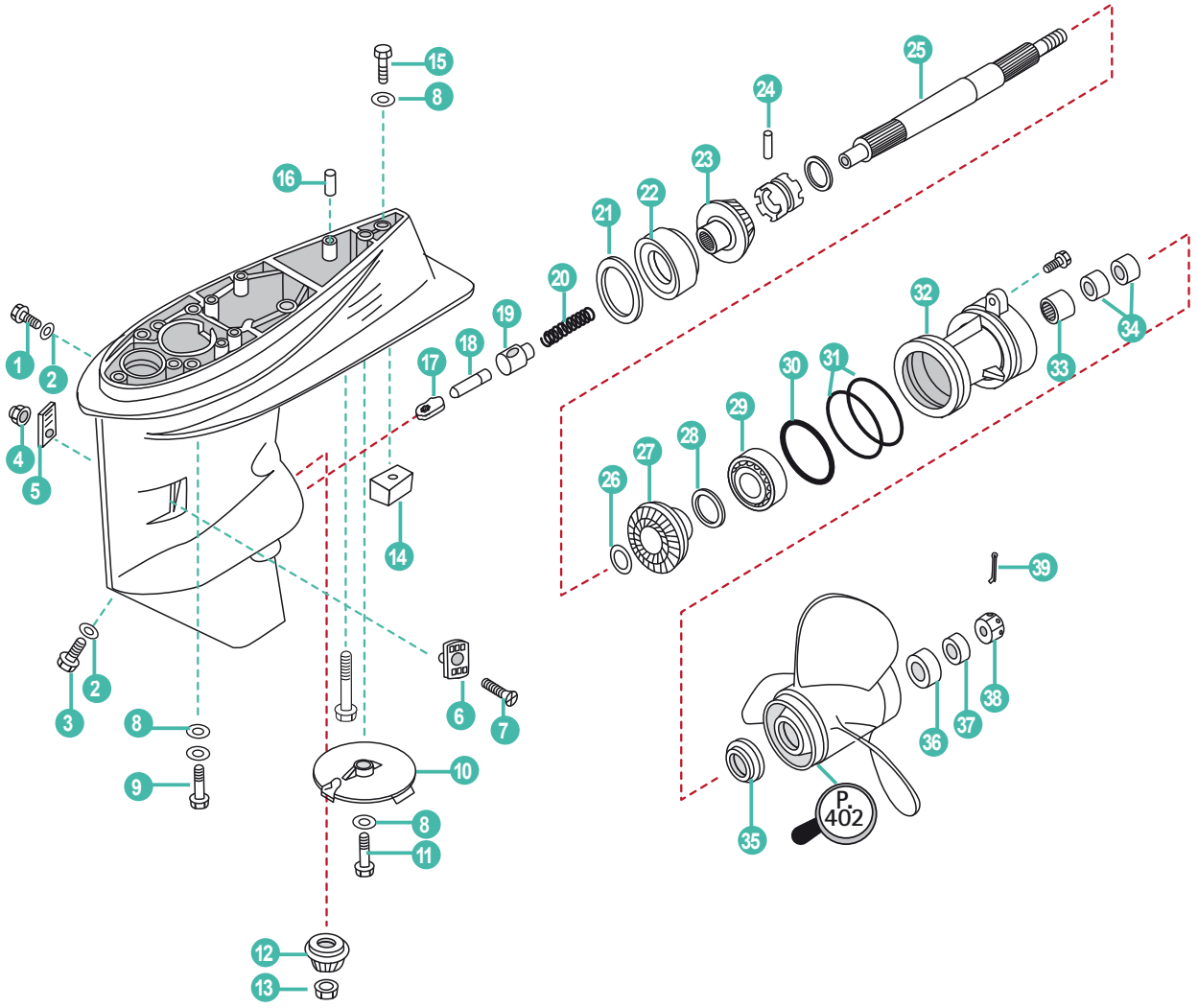



REF	OEM
REC6BG-W0078-00	6BG-W0078-00

P. 151



REF
REC80W90U3
REC80W90U6
RECGREU1
RECGREU12

P. 43

	REF	OEM				
1	REC90340-08002	90340-08002	TORNILLO DRENAJE	BOLT, DISCHARGING OIL	VITE DRENAGGIO	BOUCHON DE VIDANGE
2	REC90430-08020	90430-08003	JUNTA	GASKET	GUARNIZIONE	JOINT
3	REC688-45341-00	688-45341-10	TORNILLO DRENAJE	BOLT, DISCHARGING OIL	VITE DRENAGGIO	BOUCHON DE VIDANGE
4	PAGB/T889.1-M5	95380-05600	TUERCA	LOCK NUT	DADO	ÉCROU
5	PAT40-04000023	63D-45215-00	CUBIERTA ENTRADA AGUA **B**	WATER INLET **B**	COPERCHIO ACQUA **B**	GRILLE D'ENTREE D'EAU **B**
6	PAT40-04000022	63D-45214-00	CUBIERTA ENTRADA AGUA **A**	WATER INLET **A**	COPERCHIO ACQUA **A**	GRILLE D'ENTREE D'EAU **A**
7	PAGB/T820-M5X30	90152-05010	TORNILLO	SCREW	VITE	VIS
8	PAGB/T97.1-8	92995-10600	ARANDELA	WASHER	RONDELLA	RONDELLE
9	REC97075-10040	97075-10040	PERNO	STUD	BULLONE	BOULON
10	CM67C-45371-00A	67C-45371-00	ÁNODO	ANODE	ANODO	ANODE
11	PAGB/T5783-M8X25	97095-08025	PERNO	STUD	BULLONE	BOULON
12	REC66T-45551-00	667-45551-00	PIÑÓN ATAQUE	INITIATIVE GEAR	MARCIA INIZIATIVA	PIGNON D'ATTAQUE
13	REC90170-12138	90170-12138	TUERCA	LOCK NUT	DADO	ÉCROU
14	CM67C-45251-00A	67C-45251-00	ÁNODO	ANODE	ANODO	ANODE
15	PAGB/T5783-M8X35	97095-08035	PERNO	STUD	BULLONE	BOULON
16	REC93606-12019	93606-12019	PASADOR	PIN	SPINOTTO	LEVIER
17	PAF60-04000003	62Y-44151-00	LEVA DE CAMBIO	SHIFTING CAM	LEVA CAMBIO	CAME DE CHANGEMENT
18	PAF60-04020005	63D-45635-00	ÉMBOLO	PLUNGER	BULLONE	BOUCHON
19	REC663-45634-00	663-45634-00	DESLIZADOR DEL CAMBIO	CLUTCH DOG	TRAINABILE CAMBIO	PIVOT
20	PAF60-04020002	90501-18001	MUELLE	SPRING	MOLLA	RESSORT
21	PAT40-04000004-1	663-45567-01	GRUESO 0.10 mm	SHIM 0.10 mm	SPESSORE 0.10 mm	CALE 0.10 mm
	PAT40-04000004-2	663-45567-10	GRUESO 0.12 mm	SHIM 0.12 mm	SPESSORE 0.12 mm	CALE 0.12 mm
	PAT40-04000004-3	663-45567-20	GRUESO 0.15 mm	SHIM 0.15 mm	SPESSORE 0.15 mm	CALE 0.15 mm
	PAT40-04000004-5	663-45567-40	GRUESO 0.30 mm	SHIM 0.30 mm	SPESSORE 0.30 mm	CALE 0.30 mm
22	REC93332-00003	93332-00003	COJINETE	BEARING	CUSCINETTO	ROULEMENT
23	REC66T-45560-00	66T-45560-01	PIÑÓN MARCHA AVANTE	POSITIVE GEAR ASSY	PIGNONE MARCIA AVANTI	PIGNON DE MARCHE AVANT
24	REC90250-06023	90250-06023	PASADOR	PIN	SPINOTTO	PIN
25	PAF60-04020001	63D-45611-00	EJE HÉLICE	PROPELLER SHAFT	ASSE ELICA	ARBRE D'HELICE
26	REC90201-22429	90201-22429	ARANDELA	WASHER	RONDELLA	RONDELLE
27	REC66T-45571-00	667-45571-00	PIÑÓN MARCHA ATRÁS	REVERSE GEAR	PIGNONE MARCIA INDIETRO	PIGNON MARCHE ARRIÈRE
28	PAT40-04060005-2	63D-45577-10	GRUESO 0.12 mm	SHIM 0.12 mm	SPESSORE 0.12 mm	CALE 0.12 mm
	PAT40-04060005-3	63D-45577-20	GRUESO 0.15 mm	SHIM 0.15 mm	SPESSORE 0.15 mm	CALE 0.15 mm
	PAT40-04060005-4	63D-45577-30	GRUESO 0.18 mm	SHIM 0.18 mm	SPESSORE 0.18 mm	CALE 0.18 mm
	PAT40-04060005-5	63D-45577-40	GRUESO 0.30 mm	SHIM 0.30 mm	SPESSORE 0.30 mm	CALE 0.30 mm
	PAT40-04060005-6	63D-45577-50	GRUESO 0.40 mm	SHIM 0.40 mm	SPESSORE 0.40 mm	CALE 0.40 mm
	PAT40-04060005-7	63D-45577-60	GRUESO 0.50 mm	SHIM 0.50 mm	SPESSORE 0.50 mm	CALE 0.50 mm
29	REC93306-001U1	93306-001U1	COJINETE	BEARING	CUSCINETTO	ROULEMENT
30	REC93210-69MG6	93210-69MG6	TÓRICA	O-RING	O-RING	JOINT TORIQUE
31	REC93210-74MG5	93210-74MG5	TÓRICA	O-RING	O-RING	JOINT TORIQUE
32	REC63D-45361-02-4D	63D-45361-02-8D	DIÁBOLO	CAP, LOWER CASING	COPERCHIO CARTER INFERIORE	COUVERCLE, POMPE D'EAU
33	REC93317-22204	93317-22204	COJINETE	BEARING	CUSCINETTO	ROULEMENT
34	REC93101-22M00	93101-22M00	RETÉN DE ACEITE	OIL SEAL	PARAOLIO	JOINT SPI
35	REC663-45987-00	663-45987-02	ESPACIADOR	SPACER	DISTANZIALE	ENTRETOISE
36	REC66T-45997-00	667-45997-00	ESPACIADOR	SPACER	DISTANZIALE	ENTRETOISE
37	REC90389-22M01	90389-22M01	CASQUILLO HELICE	WASHER	GHIERA ELICA	RONDELLE D'HELICE
38	REC90171-16011	90171-16011	TUERCA	LOCK NUT	DADO	ÉCROU
39	REC91490-30025	91490-30025	PASADOR	PIN	SPINOTTO	PIN

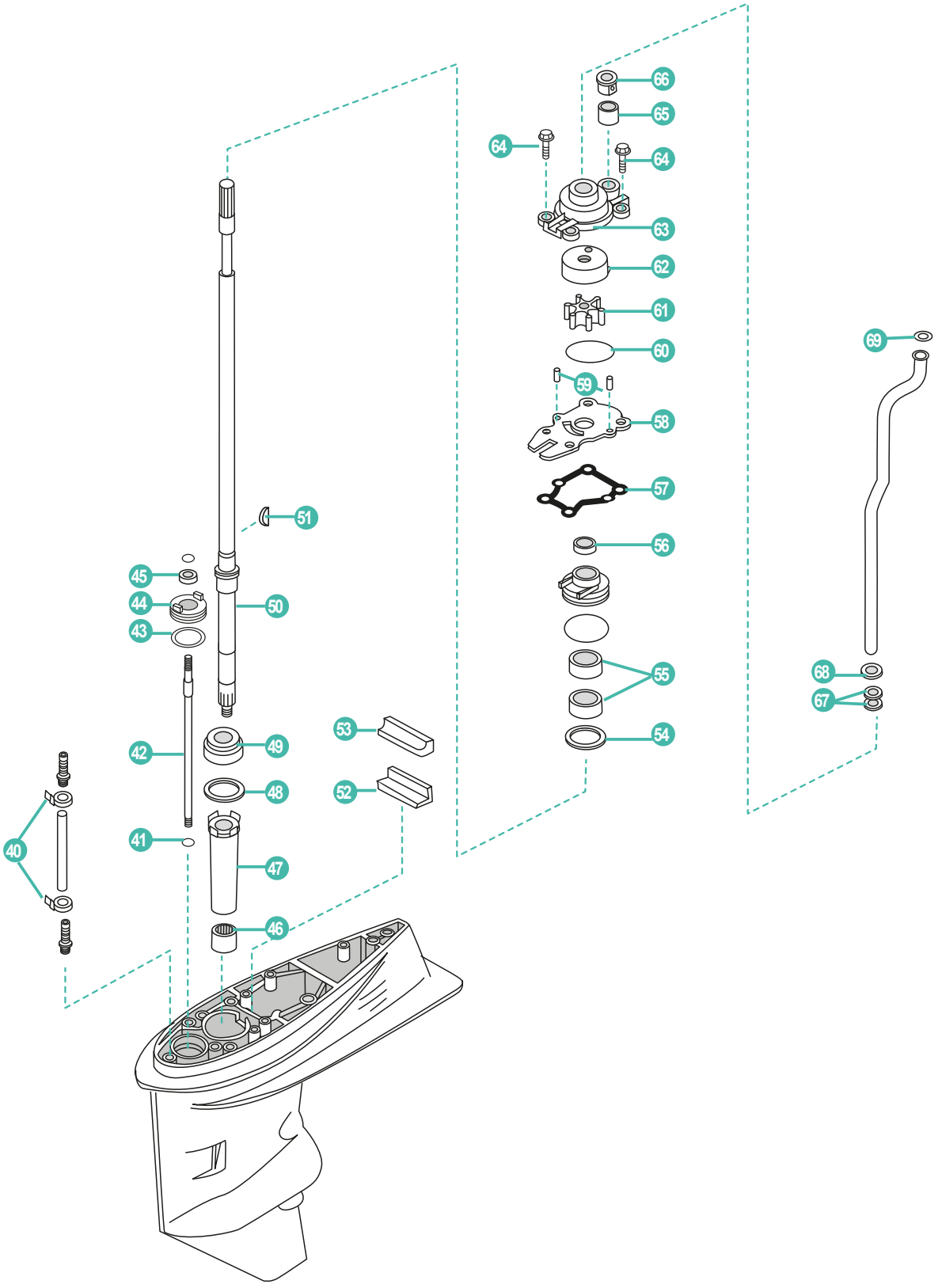
66
65
64
64
63
62
61
60
59
58
57
56
55
54
69
68
67
51
45
44
50
43
53
42
49
52
48
41
47
40
46

	REF	OEM				
40	PAHT-2.5X60	90465-11M10	BRIDA	CLAMP	FLANGIA	COLLIER
41	REC99001-08600-00	99001-08600	ARANDELA	WASHER	RONDELLA	RONDELLE
42	PA60-04000004	63D-44144-00	VARILLA DE CAMBIO	SHIFTING CAM	ASTA CAMBIO	LEVIER DE VITESSE
43	REC93210-33MG4	93210-33MG4	TÓRICA	O-RING	O-RING	JOINT TORIQUE
44	PAF60-04000101	63D-45321-00	PLACA	COVER, SHIFTING CAM	PACCA	SUPPORT
45	REC93106-09014	93106-09014	RETÉN DE ACEITE	OIL SEAL	PARAOLIO	JOINT SPI
46	REC93315-32224	93315-32224	COJINETE	BEARING	CUSCINETTO	ROULEMENT
47	PAT40-04000002	6H4-45536-00	CAMISA EJE	SLEEVE, DRIVE	TUBO GUIDA	RONDELLE
	PAT40-04000003-1	663-45587-01	GRUESO 0.10 mm	SHIM 0.10 mm	SPESSORE 0.10 mm	CALE 0.10 mm
	PAT40-04000003-2	663-45587-10	GRUESO 0.12 mm	SHIM 0.12 mm	SPESSORE 0.12 mm	CALE 0.12 mm
	PAT40-04000003-3	663-45587-20	GRUESO 0.15 mm	SHIM 0.15 mm	SPESSORE 0.15 mm	CALE 0.15 mm
48	PAT40-04000003-4	663-45587-30	GRUESO 0.18 mm	SHIM 0.18 mm	SPESSORE 0.18 mm	CALE 0.18 mm
	PAT40-04000003-5	663-45587-40	GRUESO 0.30 mm	SHIM 0.30 mm	SPESSORE 0.30 mm	CALE 0.30 mm
	PAT40-04000003-6	663-45587-50	GRUESO 0.40 mm	SHIM 0.40 mm	SPESSORE 0.40 mm	CALE 0.40 mm
	PAT40-04000003-7	663-45587-60	GRUESO 0.50 mm	SHIM 0.50 mm	SPESSORE 0.50 mm	CALE 0.50 mm
49	REC93332-00001	93332-00001	COJINETE	BEARING	CUSCINETTO	ROULEMENT
50	REC67C-45501-10	67C-45501-10	EJE VERTICAL **L**	DRIVE SHAFT **L**	ASSE VERTICALE **L**	ARBRE DE COMMANDE **L**
	REC67C-45501-00	67C-45501-00	EJE VERTICAL **S**	DRIVE SHAFT **S**	ASSE VERTICALE **S**	ARBRE DE COMMANDE **S**
51	REC90280-03M03	90280-03M03	CUÑA	KEY WOODRUFF	CHIAVETTA	CLAVETTE
52	REC663-45376-00	663-45376-00	GUÍA SELLO DE GOMA	GUIDE RUB. SEAL	GUIDA PARAOLIO	GUIDE EN CAOUTCHOUC
53	PAT40-04000014	63D-45375-00	SELLO DE GOMA	WATER ENVELOP	PARAOLIO	SUPPORT EN CAOUTCHOUC
54	PAT40-04000008	90201-27M00	ARANDELA	WASHER	RONDELLA	RONDELLE
55	REC93101-22M60	93101-22M60	RETÉN DE ACEITE	OIL SEAL	PARAOLIO	JOINT SPI
56	PAT40-04000009	66T-45344-01	CUBIERTA SELLO DE ACEITE	COVER, OIL SEAL	PARAOLIO	BAGUE EN CAOUTCHOUC
57	REC63D-44316-00	63D-44316-00	JUNTA	GASKET	GUARNIZIONE	JOINT
58	REC63D-44323-00	63D-44323-00	PLACA EXTERIOR	OUTER PLATE	PLACCA ESTERIORE	PLAQUE DE POMPE À EAU
59	PAF25-04000007	93604-08062	PASADOR	PIN	SPINOTTO	PIN
60	REC93210-59MG7	93210-59MG7	TÓRICA	O-RING	O-RING	JOINT TORIQUE
61	REC6H4-44352-02	6H4-44352-02	TURBINA	IMPELLER	GIRANTE	TURBINE
62	REC63D-44322-00	63D-44322-00	TAPA, BOMBA AGUA	COVER, INNER WATER PUMP	COPERCHIO, POMPE D'EAU	INSERT DE POMPE À EAU
63	PAT40-04000201	66T-44311-00	CUERPO BOMBA AGUA	HOUSING, WATER PUMP	CORPO POMPA	CORPS DE POMPE À EAU
64	REC90119-08M15	90119-08M15	TORNILLO CON ARANDELA	SCREW WITH WASHER	VITE CON RONDELLA	VIS PLUS RONDELLE
65	REC663-44366-00	663-44366-00	GOMA DEL SELLO DE AGUA	DAMPER, WATER SEAL	PARAOLIO	TUBE DE POMPE À EAU
66	REC63D-44312-00	63D-44312-00	CUBIERTA CAJA DE BOMBA DE AGUA	PUMP COVER	COPERCHIO CASSA POMPA ACQUA	BAGUE DE POMPE À EAU
67	PAT40-02000002	663-44367-00	GOMA DEL SELLO DE AGUA	DAMPER, WATER SEAL	PARAOLIO	JOINT
68	REC90430-12072	90430-12072	JUNTA	GASKET	GUARNIZIONE	JOINT
69	PAF25-02000019	90202-12060	ARANDELA PLANA	WASHER	RONDELLA PIANA	RONDELLE

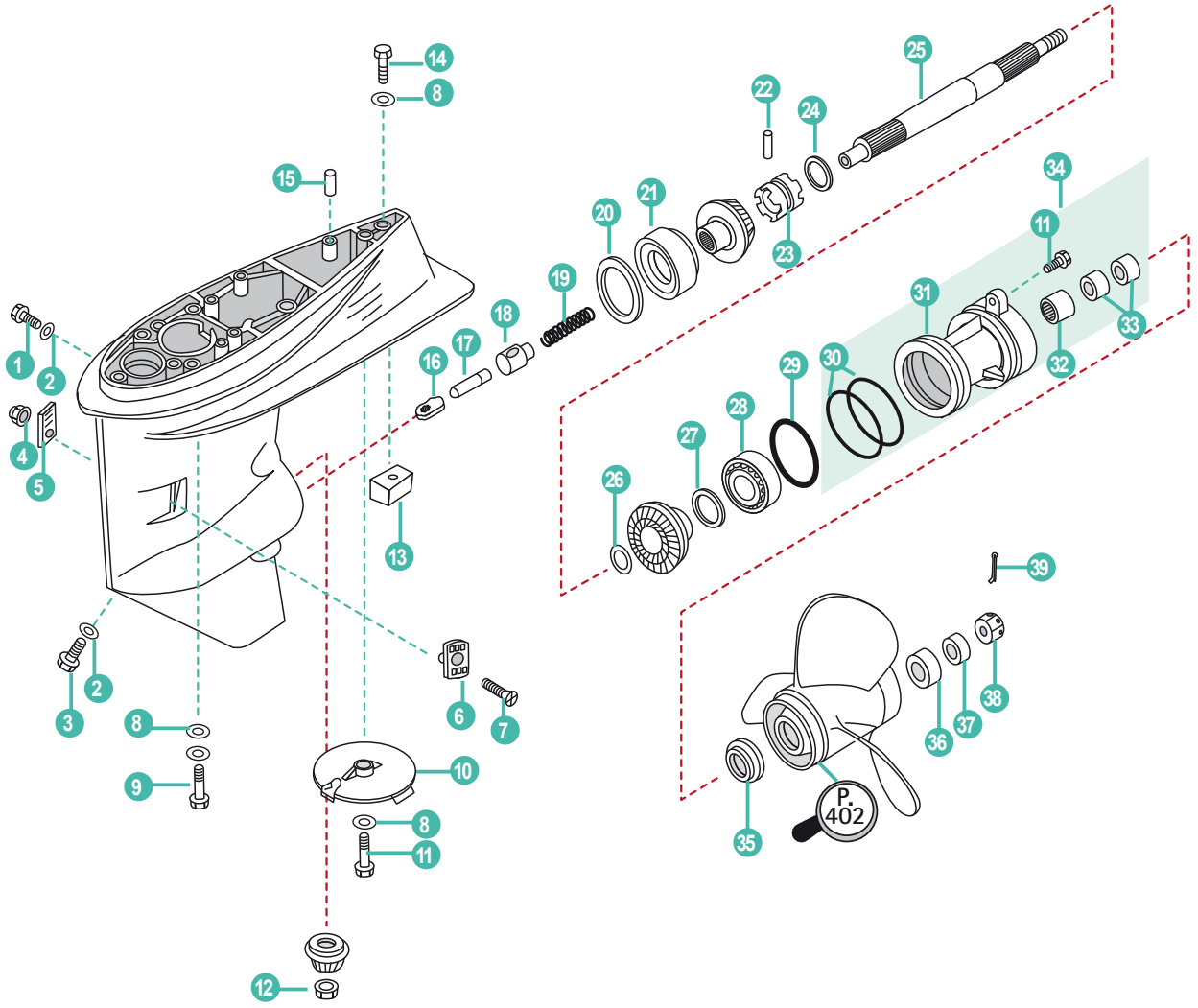

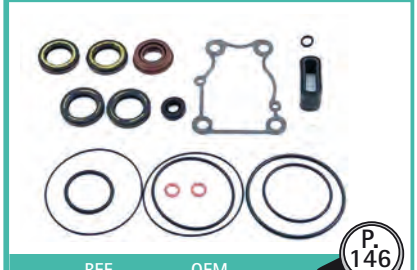

REF	OEM
REC62Y-W0001-22	62Y-W0001-22

P. 146

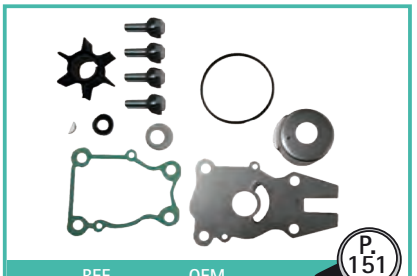

REF	OEM
REC63D-W0078-01	63D-W0078-01

P. 151



REF
REC80W90U3
REC80W90U6
RECGREU1
RECGREU12

P. 43

	REF	OEM				
1	REC90340-08002	90340-08002	TORNILLO DRENAJE	BOLT, DISCHARGING OIL	VITE DRENAGGIO	BOUCHON DE VIDANGE
2	REC90430-08020	90430-08003	JUNTA	GASKET	GUARNIZIONE	JOINT
3	REC688-45341-00	688-45341-10	TORNILLO DRENAJE	BOLT, DISCHARGING OIL	VITE DRENAGGIO	BOUCHON DE VIDANGE
4	PAGB/T889.1-M5	95380-05600	TUERCA	LOCK NUT	DADO	ÉCROU
5	PAT40-04000023	63D-45215-00	CUBIERTA ENTRADA AGUA **B**	WATER INLET **B**	COPERCHIO ACQUA **B**	GRILLE D'ENTREE D'EAU **B**
6	PAT40-04000022	63D-45214-00	CUBIERTA ENTRADA AGUA **A**	WATER INLET **A**	COPERCHIO ACQUA **A**	GRILLE D'ENTREE D'EAU **A**
7	PAGB/T820-M5X30	90152-05M06	TORNILLO	SCREW	VITE	VIS
8	PAGB/T97.1-8	92995-10600	ARANDELA	WASHER	RONDELLA	RONDELLE
9	REC97075-10040	97075-10040	PERNO	STUD	BULLONE	BOULON
10	CM67C-45371-00A	67C-45371-00	ÁNODO	ANODE	ANODO	ANODE
11	PAGB/T5783-M8X25	97095-08025	PERNO	STUD	BULLONE	BOULON
12	REC90170-12138	90170-12138	TUERCA	LOCK NUT	DADO	ÉCROU
13	CM67C-45251-00A	67C-45251-00	ÁNODO	ANODE	ANODO	ANODE
14	PAGB/T5783-M8X35	97095-08035	PERNO	STUD	BULLONE	BOULON
15	REC93606-12019	93606-12019	PASADOR	PIN	SPINOTTO	PIN
16	PAF60-04000003	62Y-44151-00	LEVA DE CAMBIO	SHIFTING CAM	LEVA DE CAMBIO	CAME DE CHANGEMENT
17	PAF60-04020005	63D-45635-00	ÉMBOLO	PLUNGER	BULLONE	BOUCHON
18	REC663-45634-00	663-45634-00	DESLIZADOR DEL CAMBIO	CLUTCH DOG	TRAINABILE CAMBIO	PIVOT
19	PAF60-04020002	90501-18001	MUELLE	SPRING	MOLLA	RESSORT
20	PAT40-04000004-1	663-45567-01	GRUESO 0.10 mm	SHIM 0.10 mm	SPESSORE 0.10 mm	CALE 0.10 mm
	PAT40-04000004-2	663-45567-10	GRUESO 0.12 mm	SHIM 0.12 mm	SPESSORE 0.12 mm	CALE 0.12 mm
	PAT40-04000004-3	663-45567-20	GRUESO 0.15 mm	SHIM 0.15 mm	SPESSORE 0.15 mm	CALE 0.15 mm
	PAT40-04000004-5	663-45567-40	GRUESO 0.30 mm	SHIM 0.30 mm	SPESSORE 0.30 mm	CALE 0.30 mm
21	REC93332-00003	93332-00003	COJINETE	BEARING	CUSCINETTO	ROULEMENT
22	REC90250-06023	90250-06023	PASADOR	PIN	SPINOTTO	LEVIER
23	PAF60-04020003	62Y-45631-00	EMBRAGUE DE GARRA	CLUTCH DOG	SELETTORE	CRABOT
24	PAT40-04050005	67C-45633-00	ANILLO DEL PASADOR	ANNULAR SPRING, CLUTCH	PARAOLIO	RESSORT
25	PAF60-04020001	63D-45611-00	EJE HÉLICE	PROPELLER SHAFT	ASSE ELICA	ARBRE D'HELICE
26	REC90201-22429	90201-22429	ARANDELA	WASHER	RONDELLA	RONDELLE
27	PAT40-04060005-2	63D-45577-10	GRUESO 0.12 mm	SHIM 0.12 mm	SPESSORE 0.12 mm	CALE 0.12 mm
	PAT40-04060005-3	63D-45577-20	GRUESO 0.15 mm	SHIM 0.15 mm	SPESSORE 0.15 mm	CALE 0.15 mm
	PAT40-04060005-4	63D-45577-30	GRUESO 0.18 mm	SHIM 0.18 mm	SPESSORE 0.18 mm	CALE 0.18 mm
	PAT40-04060005-5	63D-45577-40	GRUESO 0.30 mm	SHIM 0.30 mm	SPESSORE 0.30 mm	CALE 0.30 mm
	PAT40-04060005-6	63D-45577-50	GRUESO 0.40 mm	SHIM 0.40 mm	SPESSORE 0.40 mm	CALE 0.40 mm
	PAT40-04060005-7	63D-45577-60	GRUESO 0.50 mm	SHIM 0.50 mm	SPESSORE 0.50 mm	CALE 0.50 mm
28	REC93306-001U1	93306-001U1	COJINETE	BEARING	CUSCINETTO	ROULEMENT
29	REC93210-69MG6	93210-69MG6	TÓRICA	O-RING	O-RING	JOINT TORIQUE
30	REC93210-74MG5	93210-74MG5	TÓRICA	O-RING	O-RING	JOINT TORIQUE
31	REC63D-45361-02-4D	63D-45361-02-4D	DIÁBOLO	CAP, LOWER CASING	COPERCHIO CARTER INFERIORE	DIABOLO
32	REC93317-22204	93317-22204	COJINETE	BEARING	CUSCINETTO	ROULEMENT
33	REC93101-22M00	93101-22M00	RETÉN DE ACEITE	OIL SEAL	PARAOLIO	JOINT SPI
34	PAF60-04030000	63D-45361-02-8D	FUNDA INFERIOR COMPLETA	COVER ASSY, LOWER CASING	COPERCHIO CARTER COMPLETA	DIABOLO COMPLET
35	REC663-45987-00	663-45987-02	ESPACIADOR	SPACER	DISTANZIALE	ENTRETOISE
36	REC66T-45997-00	667-45997-00	ESPACIADOR	SPACER	DISTANZIALE	ENTRETOISE
37	REC90389-22M01	90389-22M01	CASQUILLO HELICE	WASHER	GHIERA ELICA	RONDELLE D' HELICE
38	REC90171-16011	90171-16011	TUERCA	LOCK NUT	DADO	ÉCROU
39	REC91490-30025	91490-30025	PASADOR	PIN	SPINOTTO	CLAVETTE

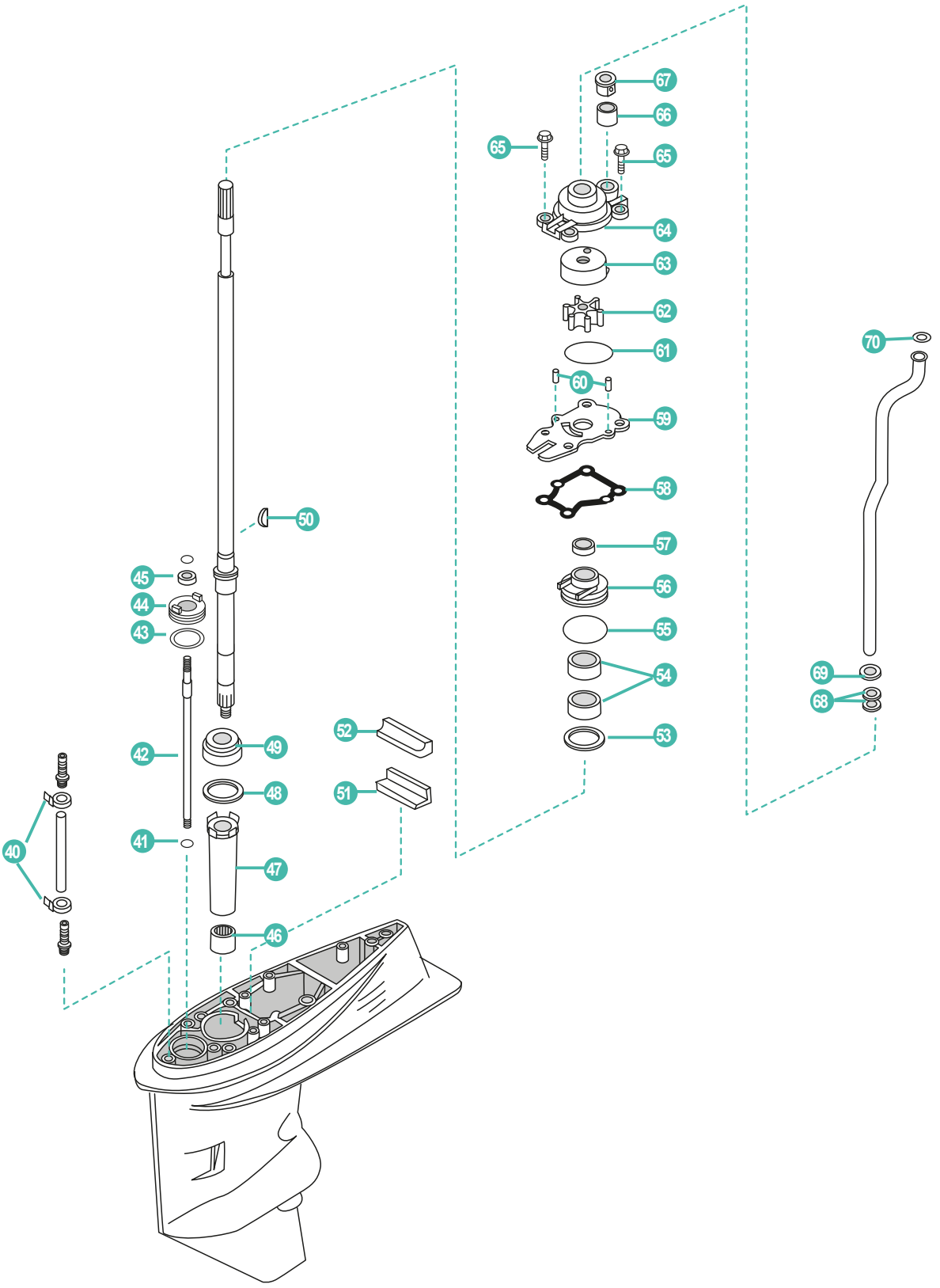
67
66
65
65
64
63
62
61
60
59
58
57
56
55
54
53
70
69
68
50
45
44
43
42
49
48
41
47
46
52
51
40

	REF	OEM				
40	PAHT-2.5X60	90465-11M10	BRIDA	CLAMP	FLANGIA	COLLIER
41	REC99001-08600-00	99001-08600	ARANDELA	WASHER	RONDELLA	RONDELLE
42	PA60-04000004	63D-44144-00	VARILLA DE CAMBIO	SHIFTING CAM	ASTA CAMBIO	LEVIER DE VITESSE
43	REC93210-33MG4	93210-33MG4	TÓRICA	O-RING	O-RING	JOINT TORIQUE
44	PAF60-04000101	63D-45321-00	PLACA	COVER, SHIFTING CAM	PLACCA	SUPPORT
45	REC93106-09014	93106-09014	RETÉN DE ACEITE	OIL SEAL	PARAOLIO	JOINT SPI
46	REC93315-32224	93315-32224	COJINETE	BEARING	CUSCINETTO	ROULEMENT
47	PAT40-04000002	6H4-45536-00	CAMISA EJE	SLEEVE, DRIVE	TUBO GUIDA	BAGUE NYLON
	PAT40-04000003-1	663-45587-01	GRUESO 0.10 mm	SHIM 0.10 mm	SPESSORE 0.10 mm	CALE 0.10 mm
	PAT40-04000003-2	663-45587-10	GRUESO 0.12 mm	SHIM 0.12 mm	SPESSORE 0.12 mm	CALE 0.12 mm
	PAT40-04000003-3	663-45587-20	GRUESO 0.15 mm	SHIM 0.15 mm	SPESSORE 0.15 mm	CALE 0.15 mm
48	PAT40-04000003-4	663-45587-30	GRUESO 0.18 mm	SHIM 0.18 mm	SPESSORE 0.18 mm	CALE 0.18 mm
	PAT40-04000003-5	663-45587-40	GRUESO 0.30 mm	SHIM 0.30 mm	SPESSORE 0.30 mm	CALE 0.30 mm
	PAT40-04000003-6	663-45587-50	GRUESO 0.40 mm	SHIM 0.40 mm	SPESSORE 0.40 mm	CALE 0.40 mm
	PAT40-04000003-7	663-45587-60	GRUESO 0.50 mm	SHIM 0.50 mm	SPESSORE 0.50 mm	CALE 0.50 mm
49	REC93332-00001	93332-00001	COJINETE	BEARING	CUSCINETTO	ROULEMENT
50	REC90280-03024	90280-03024	CUÑA	KEY WOODRUFF	CHIAVETTA	CLAVETTE
51	REC663-45376-00	663-45376-00-94	GUÍA SELLO DE GOMA	GUIDE RUB SEAL	GUIDA PARAOLIO	GUIDE
52	PAT40-04000014	63D-45375-00	SELLO DE GOMA	WATER ENVELOP	PARAOLIO	PROTECTION TUYAU D'EAU
53	PAT40-04000008	90201-27M00	ARANDELA	WASHER	RONDELLA	RONDELLE
54	REC93101-25M57	93101-25M57	RETÉN DE ACEITE	OIL SEAL	PARAOLIO	JOINT SPI
55	REC93210-48MG8	93210-48MG8	TÓRICA	O-RING	O-RING	JOINT TORIQUE
56	REC63D-44341-00	63D-44341-00	CAJA DE BOMBA	HOUSING PUMP	CASSA POMPA	BOITIER DE POMPE À EAU
57	PAT40-04000009	66T-45344-01	CUBIERTA SELLO DE ACEITE	COVER SEAL OIL	COPERCHIO PARAOLIO	JOINT SPI
58	REC63D-44316-00	63D-44316-00	JUNTA	GASKET	GUARNIZIONE	JOINT
59	REC63D-44323-00	63D-44323-00	PLACA EXTERIOR	OUTER PLATE	PIASTRA POMPA ACQUA	PLAQUE DE POMPE À EAU
60	PAF25-04000007	93604-08062	PASADOR	PIN	SPINOTTO	PIN
61	REC93210-59MG7	93210-59MG7	TÓRICA	O-RING	O-RING	JOINT TORIQUE
62	REC6H4-44352-02	6H4-44352-00	TURBINA	IMPELLER	GIRANTE	TURBINE
63	REC63D-44322-00	63D-44322-00	TAPA, BOMBA AGUA	COVER, INNER WATER PUMP	COPERCHIO, POMPA ACQUA	INSERT DE POMPE À EAU
64	REC63D-44311-01	63D-44311-00	CUERPO BOMBA AGUA	HOUSING, WATER PUMP	CORPO POMPA	CORPS DE POMPE À EAU
65	REC90119-08M15	90119-08M15	TORNILLO CON ARANDELA	SCREW WITH WASHER	VITE CON RONDELLA	VIS AVEC RONDELLE
66	REC663-44366-00	663-44366-00	GOMA DEL SELLO DE AGUA	GUIDE BUSHING, WATER PIPE	PARAOLIO	MAUCHON CAOUTCHOUC DE PIPE D'EAU
67	REC63D-44312-00	63D-44312-00	CUBIERTA CAJA DE BOMBA DE AGUA	PUMP COVER	COPERCHIO CORPO ACQUA	PLAQUE POMPE À EAU
68	PAT40-02000002	663-44367-00	GOMA DEL SELLO DE AGUA	GUIDE BUSHING, WATER PIPE	PARAOLIO	JOINT CAHOUTCHOUC
69	REC90430-12072	90430-12072	JUNTA	GASKET	GUARNIZIONE	JOINT
70	PAF25-02000019	90202-12060	ARANDELA PLANA	WASHER	RONDELLA PIANA	RONDELLE

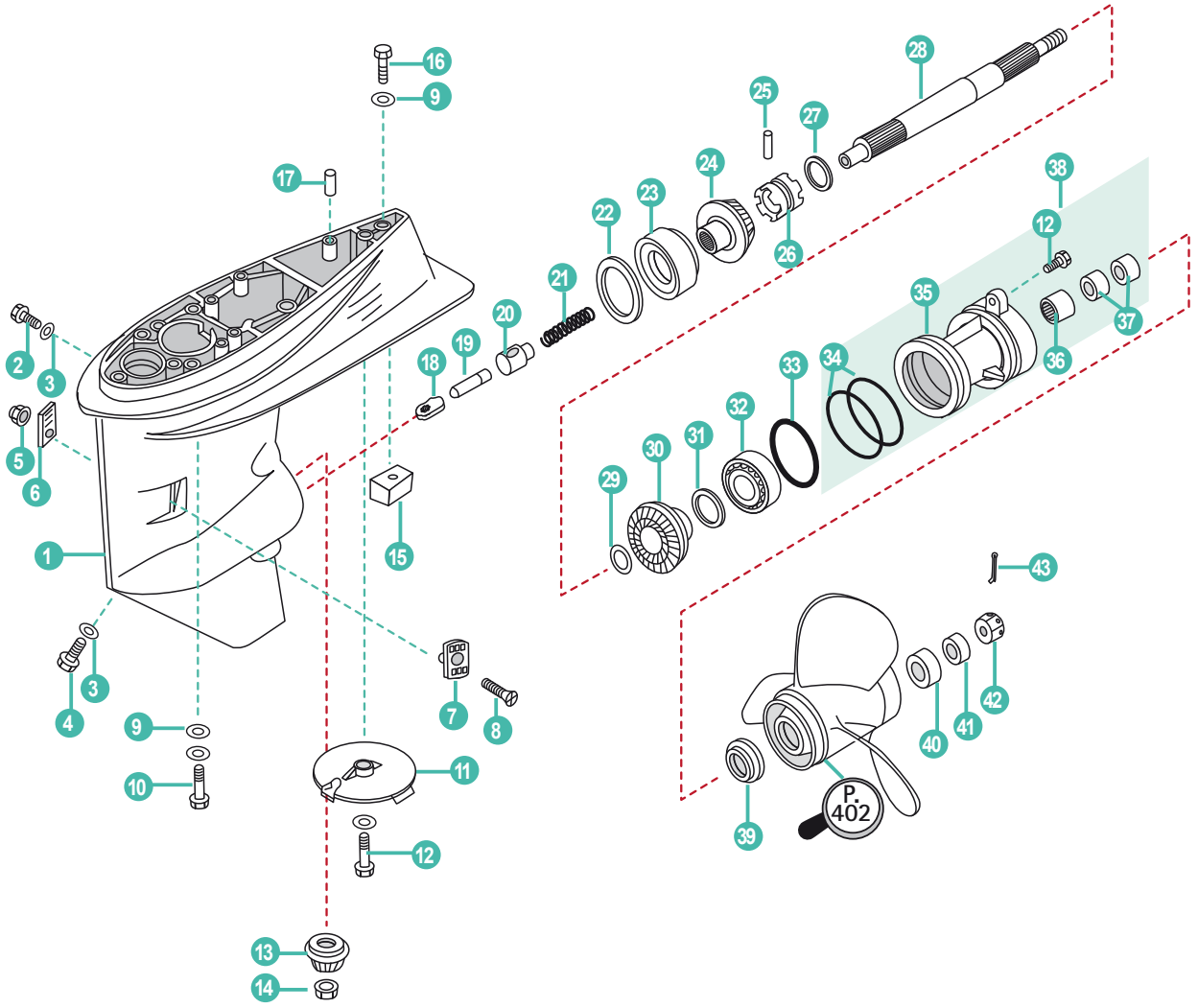

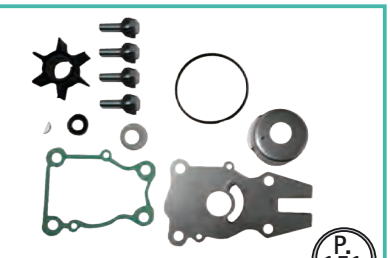

REF	OEM
REC63D-W0078-01	63D-W0078-01

P. 151



REF
REC80W90U3
REC80W90U6
RECGREU1
RECGREU12

P. 43

	REF	OEM				
	PAF60-04000000	69W-45300-04-8D	COLA COMPLETA **L**	COMPLETE GEAR HOUSING **L**	PIEDE COMPLETO **L**	EMBASE COMPLETE **L**
1	PAF60-04000001	69W-45301-00-8D	CARCASA COMPLETA	LOWER CASING	CARCASSA COMPLETA	CARTER D'EMBASE
2	REC90340-08002	90340-08002	TORNILLO DRENAJE	BOLT, DISCHARGING OIL	VITE DRENAGGIO	BOUCHON DE VIDANGE
3	REC90430-08020	90430-08003	JUNTA	GASKET	GUARNIZIONE	JOINT
4	REC688-45341-00	688-45341-10	TORNILLO DRENAJE	BOLT, DISCHARGING OIL	VITE DRENAGGIO	VIS DE VIDANGE
5	PAGB/T889.1-M5	95380-05600	TUERCA	LOCK NUT	DADO	ÉCROU
6	PAT40-04000023	63D-45215-00	CUBIERTA ENTRADA AGUA **B**	WATER INLET **B**	COPERCHIO ACQUA **B**	GRILLE D'ENTREE D'EAU **B**
7	PAT40-04000022	63D-45214-00	CUBIERTA ENTRADA AGUA **A**	WATER INLET **A**	COPERCHIO ACQUA **A**	GRILLE D'ENTREE D'EAU **A**
8	PAGB/T820-M5X30	90152-05010	TORNILLO	SCREW	VITE	VIS
9	PAGB/T97.1-8	92995-10600	ARANDELA	WASHER	RONDELLA	RONDELLE
10	REC97075-10040	97075-10040	PERNO	STUD	BULLONE	BOULON
11	CM67C-45371-00A	67C-45371-00	ÁNODO	ANODE	ANODO	ANODE
12	PAGB/T5783-M8X25	97095-08025	PERNO	STUD	BULLONE	BOULON
13	PAF60-04000002	69W-45551-00	PIÑÓN ATAQUE	INITIATIVE GEAR	MARCIA INIZIATIVA	PIGNON D'ATTAQUE
14	REC90170-12138	90170-12138	TUERCA	LOCK NUT	DADO	ÉCROU
15	CM67C-45251-00A	67C-45251-00	ÁNODO	ANODE	ANODO	ANODE
16	PAGB/T5783-M8X35	97095-08035	PERNO	STUD	BULLONE	BOULON
17	REC93606-12019	93606-12019	PASADOR	PIN	SPINOTTO	PIN
18	PAF60-04000003	62Y-44151-00	LEVA DE CAMBIO	SHINFTING CAM	LEVA DE CAMBIO	CAME DE CHANGEMENT
19	PAF60-04020005	63D-45635-00	ÉMBOLO	PLUNGER	BULLONE	BOUCHON
20	REC663-45634-00	663-45634-00	DESLIZADOR DEL CAMBIO	CLUTCH DOG	TRAINABILE CAMBIO	PIVOT
21	PAF60-04020002	90501-18001	MUELLE	SPRING	MOLLA	RESSORT
22	PAT40-04000004-1	663-45567-01	GRUESO 0.10 mm	SHIM 0.10 mm	SPESSORE 0.10 mm	CALE 0.10 mm
	PAT40-04000004-2	663-45567-10	GRUESO 0.12 mm	SHIM 0.12 mm	SPESSORE 0.12 mm	CALE 0.12 mm
	PAT40-04000004-3	663-45567-20	GRUESO 0.15 mm	SHIM 0.15 mm	SPESSORE 0.15 mm	CALE 0.15 mm
	PAT40-04000004-5	663-45567-40	GRUESO 0.30 mm	SHIM 0.30 mm	SPESSORE 0.30 mm	CALE 0.30 mm
23	PAKOYOHI-CAP322/32	93332-00092	COJINETE	BEARING	CUSCINETTO	ROULEMENT
24	PAF60-04000600	69W-45560-00	PIÑÓN MARCHA AVANTE	POSITIVE GEAR ASSY	PIGNONE MARCIA AVANTI	PIGNON DE MARCHE AVANT
25	REC90250-06023	90250-06023	PASADOR	PIN	SPINOTTO	LEVIER
26	PAF60-04020003	62Y-45631-00	EMBRAGUE DE GARRA	CLUTCH DOG	SELETTORE	CRABOT
27	PAT40-04050005	67C-45633-00	ANILLO DEL PASADOR	ANNULAR SPRING, CLUTCH	PARAOLIO	RESSORT
28	PAF60-04020001	63D-45611-00	EJE HÉLICE	PROPELLER SHAFT	ASSE ELICA	ARBRE D'HELICE
29	PAT40-04050007	90201-22008	ARANDELA	WASHER	RONDELLA	RONDELLE
30	PAF60-04000500	62Y-45571-00	PIÑÓN MARCHA ATRÁS	REVERSE GEAR	PIGNONE MARCIA INDIETRO	PIGNON MARCHE ARRIÈRE
31	PAT40-04060005-2	63D-45577-10	GRUESO 0.12 mm	SHIM 0.12 mm	SPESSORE 0.12 mm	CALE 0.12 mm
	PAT40-04060005-3	63D-45577-20	GRUESO 0.15 mm	SHIM 0.15 mm	SPESSORE 0.15 mm	CALE 0.15 mm
	PAT40-04060005-4	63D-45577-30	GRUESO 0.18 mm	SHIM 0.18 mm	SPESSORE 0.18 mm	CALE 0.18 mm
	PAT40-04060005-5	63D-45577-40	GRUESO 0.30 mm	SHIM 0.30 mm	SPESSORE 0.30 mm	CALE 0.30 mm
	PAT40-04060005-6	63D-45577-50	GRUESO 0.40 mm	SHIM 0.40 mm	SPESSORE 0.40 mm	CALE 0.40 mm
	PAT40-04060005-7	63D-45577-60	GRUESO 0.50 mm	SHIM 0.50 mm	SPESSORE 0.50 mm	CALE 0.50 mm
32	REC93306-001U1	93306-001U1	COJINETE	BEARING	CUSCINETTO	ROULEMENT
33	REC93210-69MG6	93210-69MG6	TÓRICA	O-RING	O-RING	JOINT TORIQUE
34	REC93210-74MG5	93210-74MG5	TÓRICA	O-RING	O-RING	JOINT TORIQUE
35	REC63D-45361-02-4D	63D-45361-02-8D	DIÁBOLO	CAP, LOWER CASING	COPERCHIO CARTER INFERIORE	COUVERCLE, POMPE D'EAU
36	REC93317-22204	93317-22204	COJINETE	BEARING	CUSCINETTO	PALIER
37	REC93101-22M00	93101-22M00	RETÉN DE ACEITE	OIL SEAL	PARAOLIO	JOINT SPI
38	PAF60-04030000	63D-45361-02-8D	FUNDA INFERIOR COMPLETA	COVER ASSY, LOWER CASING	COPERCHIO CARTER COMPLETA	COUVERCLE INFERIEUR EMBASE
39	REC663-45987-00	663-45987-02	ESPACIADOR	SPACER	DISTANZIALE	ENTRETOISE
40	REC66T-45997-00	667-45997-00	ESPACIADOR	SPACER	DISTANZIALE	ENTRETOISE
41	REC90389-22M01	90389-22M01	CASQUILLO HÉLICE	WASHER	GHIERA ELICA	RONDELLE D'HELICE
42	REC90171-16011	90171-16011	TUERCA	LOCK NUT	DADO	ÉCROU
43	REC91490-30025	91490-30025	PASADOR	PIN	SPINOTTO	CLAVETTE

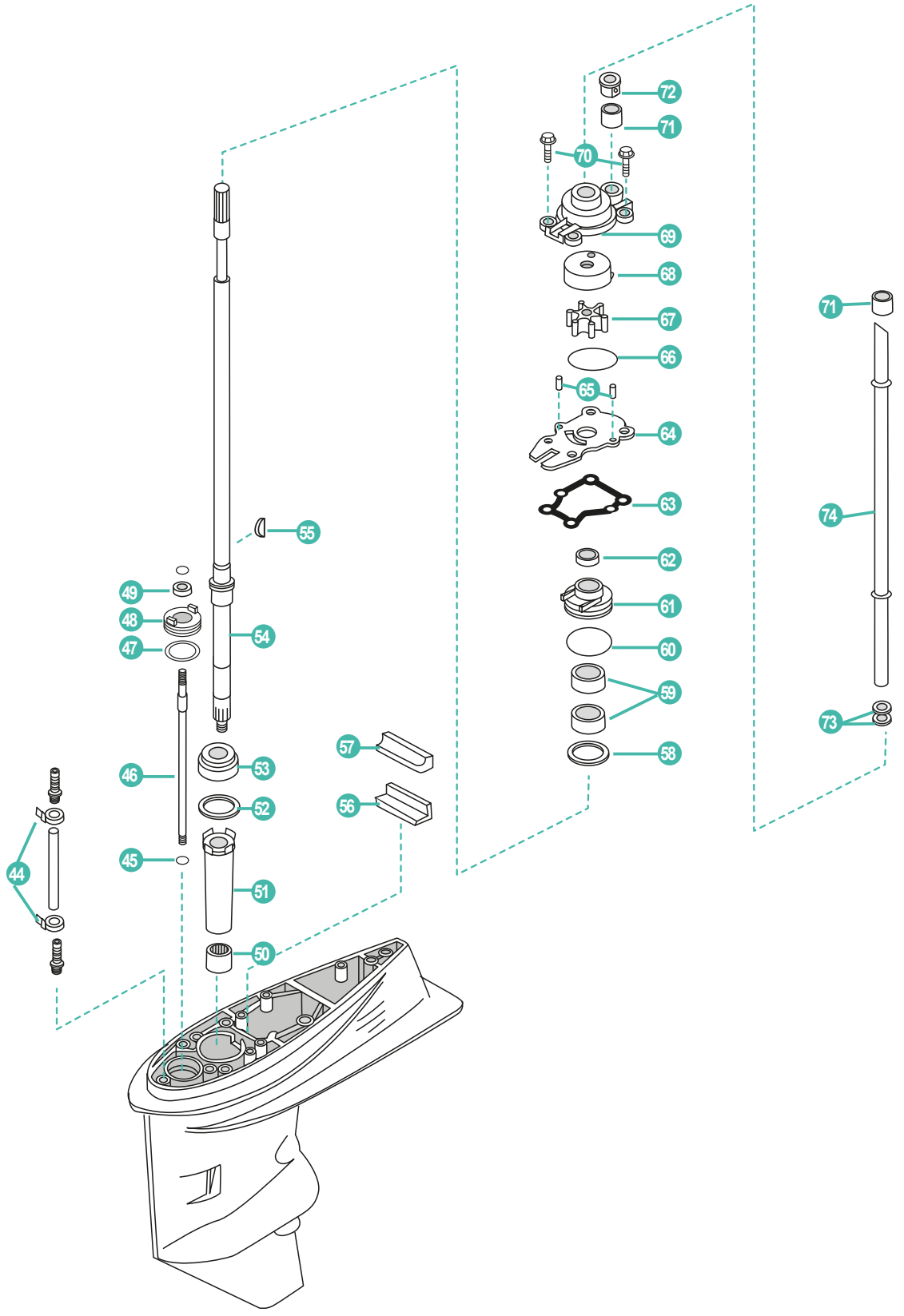
72
71
70
69
68
67
66
65
64
63
62
61
60
59
58
71
74
73
55
49
48
47
54
46
53
52
45
51
50
57
56
44

	REF	OEM				
44	PAHT-2.5X60	90465-11M10	BRIDA	CLAMP	FLANGIA	COLLIER
45	REC99001-08600-00	99001-08600	ARANDELA	WASHER	RONDELLA	RONDELLE
46	PA60-04000004	63D-44144-00	VARILLA DE CAMBIO	SHIFTING CAM	ASTICELLA DEL CAMBIO	CAME DE CHANGEMENT
47	REC93210-33MG4	93210-33MG4	TÓRICA	O-RING	O-RING	JOINT TORIQUE
48	PAF60-04000101	63D-45321-00	PLACA	COVER, SHIFTING CAM	PLACCA	SUPPORT
49	REC93106-09014	93106-09014	RETÉN DE ACEITE	OIL SEAL	PARAOLIO	JOINT SPI
50	REC93315-32224	93315-32224	COJINETE	BEARING	CUSCINETTO	PALIER
51	PAT40-04000002	6H4-45536-00	CAMISA EJE	SLEEVE, DRIVE	TUBO GUIDA	RONDELLE
	PAT40-04000003-1	663-45587-01	GRUESO 0.10 mm	SHIM 0.10 mm	SPESSORE 0.10 mm	CALE 0.10 mm
	PAT40-04000003-2	663-45587-10	GRUESO 0.12 mm	SHIM 0.12 mm	SPESSORE 0.12 mm	CALE 0.12 mm
	PAT40-04000003-3	663-45587-20	GRUESO 0.15 mm	SHIM 0.15 mm	SPESSORE 0.15 mm	CALE 0.15 mm
52	PAT40-04000003-4	663-45587-30	GRUESO 0.18 mm	SHIM 0.18 mm	SPESSORE 0.18 mm	CALE 0.18 mm
	PAT40-04000003-5	663-45587-40	GRUESO 0.30 mm	SHIM 0.30 mm	SPESSORE 0.30 mm	CALE 0.30 mm
	PAT40-04000003-6	663-45587-50	GRUESO 0.40 mm	SHIM 0.40 mm	SPESSORE 0.40 mm	CALE 0.40 mm
	PAT40-04000003-7	663-45587-60	GRUESO 0.50 mm	SHIM 0.50 mm	SPESSORE 0.50 mm	CALE 0.50 mm
53	REC93332-00001	93332-00001	COJINETE	BEARING	CUSCINETTO	ROULEMENT
54	PAF60-04010000	69W-45501-00	EJE VERTICAL COMPLETO	DRIVE SHAFT	ASSE VERTICALE	ARBRE DE COMMANDE
55	REC90280-03024	90280-03024	CUÑA	KEY WOODRUFF	CHIAVETTA	CLAVETTE
56	REC663-45376-00	663-45376-00-94	GUÍA SELLO DE GOMA	GUIDE RUB. SEAL	GUIDA PARAOLIO	GUIDE
57	PAT40-04000014	63D-45375-00	SELLO DE GOMA	WATER ENVELOP	PARAOLIO	PROTECTION TUYAU D'EAU
58	PAT40-04000008	90201-27M00	ARANDELA	WASHER	RONDELLA	RONDELLE
59	REC93101-25M57	93101-25M57	RETÉN DE ACEITE	OIL SEAL	PARAOLIO	JOINT SPI
60	PAJASOF40424-050	93210-48001	TÓRICA	O-RING	O-RING	JOINT TORIQUE
61	PAT40-04040001	6BG-44341-00	CAJA DE BOMBA	CASING A, OIL SEAL	CASSA POMPA	LOGEMENT JOINT SPI
62	PAF60-04000008	63D-45344-00	CUBIERTA SELLO DE ACEITE	COVER, OIL SEAL	PARAOLIO	COUVERTURE JOINT D'HUILE
63	REC63D-44316-00	63D-44316-00	JUNTA	GASKET	GUARNIZIONE	JOINT
64	REC63D-44323-00	63D-44323-00	PLACA EXTERIOR	WATER PLATE	PLACCA ESTERNA	PLAQUE DE POMPE À EAU
65	PAF25-04000007	93604-08062	PASADOR	PIN	SPINOTTO	LEVIER
66	REC93210-59MG7	93210-59MG7	TÓRICA	O-RING	O-RING	JOINT TORIQUE
67	REC6H3-44352-00	6H3-44352-00	TURBINA	IMPELLER	GIRANTE	TURBINE
68	REC63D-44322-00	63D-44322-00	TAPA, BOMBA AGUA	COVER, INNER WATER PUMP	COPERCHIO, POMPE D'EAU	INSERT DE POMPE À EAU
69	REC63D-44311-01	63D-44311-00	CUERPO BOMBA AGUA	HOUSING, WATER PUMP	CORPO POMPA	CORPS DE POMPE À EAU
70	REC90119-08M15	90119-08M15	TORNILLO CON ARANDELA	SCREW WITH WASHER	VITE CON RONDELLA	VIS AVEC RONDELLE
71	REC663-44366-00	663-44366-00	GOMA DEL SELLO DE AGUA	GUIDE BUSHING, WATER PIPE	PARAOLIO	GUIDE CAOUTCHOUC
72	REC63D-44312-00	63D-44312-00	CUBIERTA CAJA DE BOMBA DE AGUA	PUMP COVER	COPERCHIO CORPO ACQUA	PLAQUE POMPE À EAU
73	PAT40-02000002	663-44367-00	GOMA DEL SELLO DE AGUA	GUIDE BUSHING, WATER PIPE	PARAOLIO	JOINT CAOUTCHOUC
74	PAF60-02000007	6C5-44361-00	TUBO DE AGUA	WATER TUBE	TUBO DELL'ACQUA	DURITE D'EAU

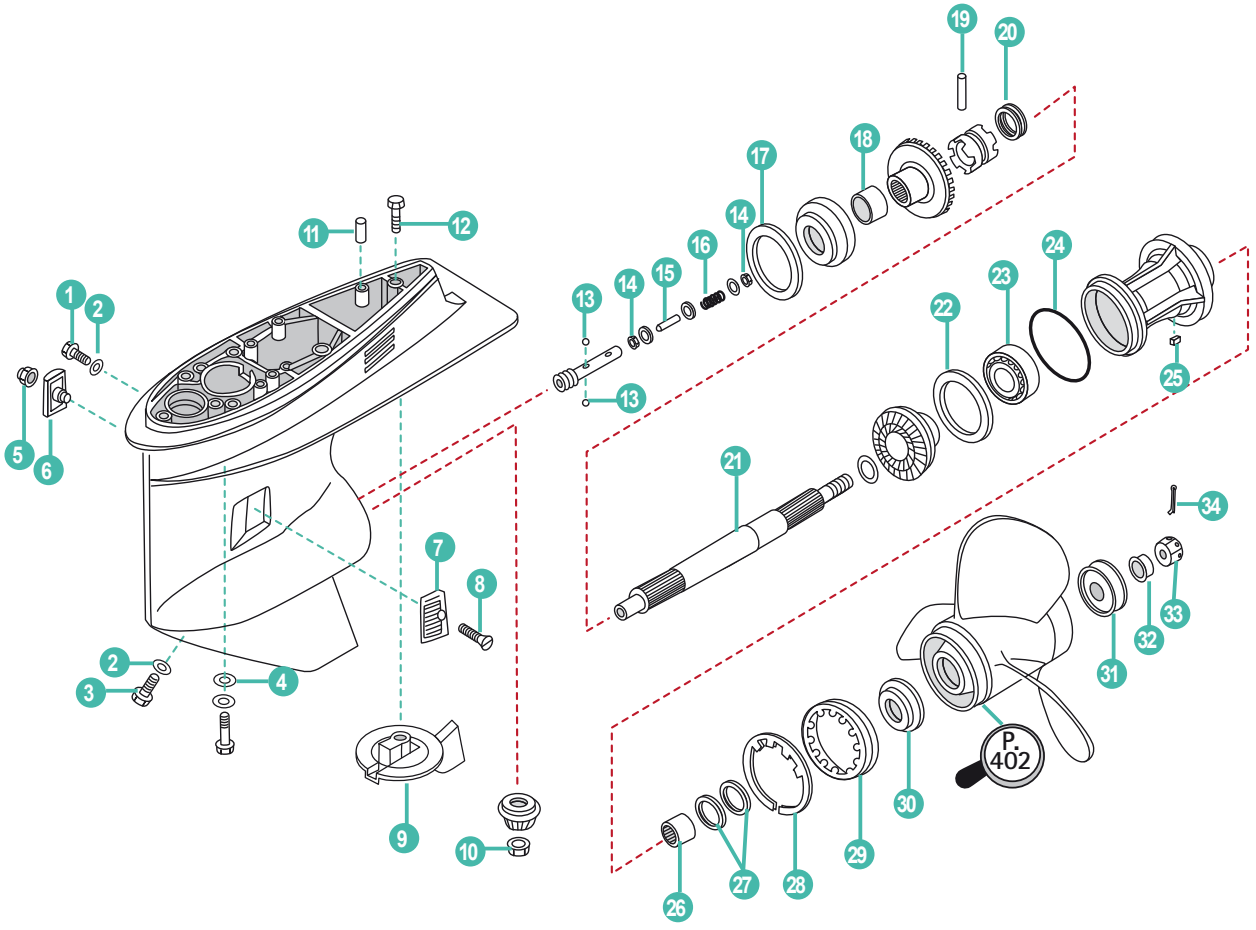

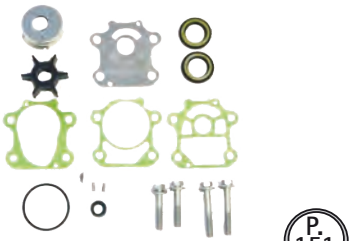

REF	OEM
REC6CJ-W0078-00	6CJ-W0078-00

P. 151



REF
REC80W90U3
REC80W90U6
RECGREU1
RECGREU12

P. 43

	REF	OEM				
1	REC90340-08002	90340-08002	TORNILLO DRENAJE	BOLT, DISCHARGING OIL	VITE DRENAGGIO	BOUCHON DE VIDANGE
2	REC90430-08020	90430-08003	JUNTA	GASKET	GUARNIZIONE	JOINT
3	REC688-45341-00	688-45341-10	TORNILLO DRENAJE	BOLT, DISCHARGING OIL	VITE DRENAGGIO	BOUCHON DE VIDANGE
4	PAGB/T97.1-8	92995-10600	ARANDELA	WASHER	RONDELLA	RONDELLE
5	PAGB/T6182-M5	90185-05002	TUERCA	LOCK NUT	DADO	ÉCROU
6	REC6H1-45215-00	6H1-45215-00	CUBIERTA ENTRADA AGUA **B**	WATER INLET **B**	COPERCHIO ACQUA **B**	GRILLE D'ENTREE D'EAU **B**
7	REC6H1-45214-00	6H1-45214-00	CUBIERTA ENTRADA AGUA **A**	WATER INLET **A**	COPERCHIO ACQUA **A**	GRILLE D'ENTREE D'EAU **A**
8	REC90151-05M00	90152-05000	TORNILLO	SCREW	VITE	VIS
9	CM67F-45371-00A	67F-45371-00	ÁNODO	ANODE	ANODO	ANODE
10	REC90170-16M01	90170-16M01	TUERCA	LOCK NUT	DADO	ÉCROU
11	REC93606-12019	93606-12019	PASADOR	PIN	SPINOTTO	LEVIER
12	PAT85-00000012	90105-16M67	PERNO	STUD	BULLONE	BOULON
13	REC93503-16003	93503-16003	ESFERA	BALL	SFERA	BILLE
14	REC90183-02M03	90183-02M03	TUERCA	LOCK NUT	DADO	ÉCROU
15	REC6H1-45668-00	6H1-45668-00	EJE DEL ÉMBOLO	FREE SHAFT	BULLONE	ARBRE
16	REC90501-12M48	90501-12M48	MUELLE	SPRING	MOLLA	RESSORT
17	PAT85-040000004-B	688-45567-01	GRUESO 0.10 mm	SHIM 0.10 mm	SPESSORE 0.10 mm	CALE 0.10 mm
18	REC93317-322V0	93317-322V0	COJINETE	BEARING	CUSCINETTO	PALIER
19	REC90250-07M02	90250-07M02	PASADOR	PIN	SPINOTTO	LEVIER
20	REC688-45633-00	688-45633-00	ANILLO DEL PASADOR	ANNULAR SPRING, CLUTCH	PARAOLIO	RESSORT
21	REC67F-45611-01	67F-45611-01	EJE HÉLICE	PROPELLER SHAFT	ASSE ELICA	ARBRE D'HELICE
22	REC67F-45576-00	67F-45576-00	ARANDELA	WASHER	RONDELLA	RONDELLE
23	REC93306-207U0	93306-207U0	COJINETE	BEARING	CUSCINETTO	PALIER
24	REC93210-86M39	93210-86M39	TÓRICA	O-RING	O-RING	JOINT TORIQUE
25	REC90282-04010	90282-04010	CHAVETA RECTA	KEY	CHIAVETTA	CLAVETTE
26	REC93317-325U0	93317-325U0	COJINETE	BEARING	CUSCINETTO	PALIER
27	REC93101-25M03	93101-25M03	RETÉN DE ACEITE	OIL SEAL	PARAOLIO	JOINT SPI
28	REC688-45383-01	688-45383-02	ARANDELA	WASHER	RONDELLA	RONDELLE
29	REC688-45384-00	688-45384-02	TUERCA	NUT	DADO	ÉCROU
30	REC688-45987-00	688-45987-01	ESPACIADOR	SPACER	DISTANZIALE	ENTRETOISE
31	REC67F-45997-00	67F-45997-00	ESPACIADOR	SPACER	DISTANZIALE	ENTRETOISE
32	REC90389-25M00	90389-25M00	CASQUILLO HÉLICE	WASHER	GHIERA ELICA	RONDELLE D'HELICE
33	REC90171-16011	90171-16011	TUERCA	LOCK NUT	DADO	ÉCROU
34	REC91490-30025	91490-30025	PASADOR	PIN	SPINOTTO	CLAVETTE

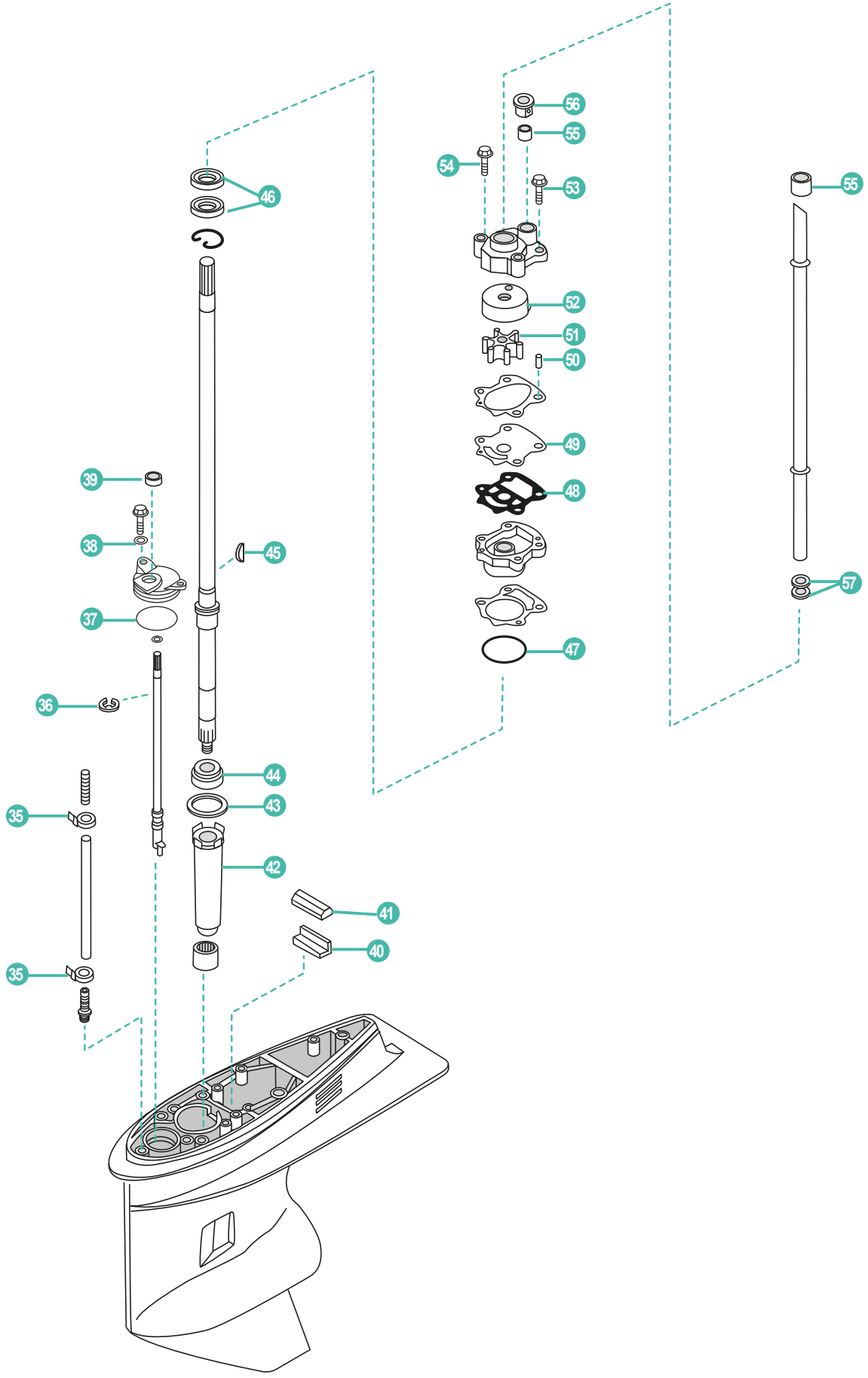
56
55
54
53
55
46
52
51
50
49
48
39
38
45
37
47
57
36
44
43
35
42
41
40
35

	REF	OEM				
35	PAHT-2.5X60	90465-11M10	BRIDA	CLAMP	FLANGIA	COLLIER
36	REC99001-08600-00	99001-08600	ARANDELA	WASHER	RONDELLA	RONDELLE
37	REC93210-49046	93210-49046	TÓRICA	O-RING	O-RING	JOINT TORIQUE
38	PAGB/T97.1-6	92995-06600	ARANDELA	WASHER	RONDELLA	RONDELLE
39	REC93106-09014	93106-09014	RETÉN DE ACEITE	OIL SEAL	PARAOLIO	JOINT SPI
40	REC663-45376-00	663-45376-00-94	GUÍA SELLO DE GOMA	GUIDE RUB. SEAL	GUIDA PARAOLIO	GUIDE
41	REC688-45375-00	63D-45375-00	RETEN DAMPER	DAMPER WASHER	PARAOLIO DAMPER	JOINT SILENT BLOC
42	REC688-45536-01	688-45536-01	CAMISA EJE	SLEEVE, DRIVE	TUBO GUIDA	RONDELLE
43	PAT85-040000003-B	688-45587-01	GRUESO 0.10 mm	SHIM 0.10 mm	SPESSORE 0.10 mm	CALE 0.10 mm
44	REC93332-000U3	93332-000U3	COJINETE	BEARING	CUSCINETTO	ROULEMENT
45	REC90280-03M03	90280-03M03	CUÑA	KEY WOODRUFF	CHIAVETTA	CLAVETTE
46	REC93101-23070	93101-23070	RETÉN DE ACEITE	OIL SEAL	PARAOLIO	JOINT SPI
47	REC93210-46044	93210-46044	TÓRICA	O-RING	O-RING	JOINT TORIQUE
48	REC6CJ-44324-00	6CJ-44324-00	JUNTA	GASKET	GUARNIZIONE	JOINT
49	REC6CJ-44323-00	6CJ-44323-00	PLACA EXTERIOR	OUTER PLATE, CARTRIDGE	COPERCHIO POMPA D'ACQUA	PLAQUE DE POMPE À EAU
50	PAF15-00000013	93604-10M03	PASADOR	PIN	SPINOTTO	PIN
51	REC6H3-44352-00	6H3-44352-00	TURBINA	IMPELLER	GIRANTE	TURBINE
52	REC63D-44322-00	63D-44322-00	TAPA, BOMBA AGUA	COVER, INNER WATER PUMP	COPERCHIO, POMPA ACQUA	INSERT DE POMPE À EAU
53	REC90119-08M14	90119-08M14	TORNILLO CON ARANDELA	SCREW WITH WASHER	VITE CON RONDELLA	VIS AVEC RONDELLE
54	REC90119-08M33	90119-08M33	TORNILLO CON ARANDELA	SCREW WITH WASHER	VITE CON RONDELLA	VIS AVEC RONDELLE
55	REC663-44366-00	663-44366-00	GOMA DEL SELLO DE AGUA	DAMPER, WATER SEAL	GHIERA	JOINT DE TUBE D'EAU
56	REC63D-44312-00	63D-44312-00	CUBIERTA CAJA DE BOMBA DE AGUA	PUMP COVER	COPERCHIO CORPO ACQUA	PLAQUE POMPE À EAU
57	PAT40-02000002	663-44367-00	GOMA DEL SELLO DE AGUA	GUIDE BUSHING, WATER PIPE	PARAOLIO	JOINT CAOUTCHOUC

4T STROKES F80A/B • F100A/D

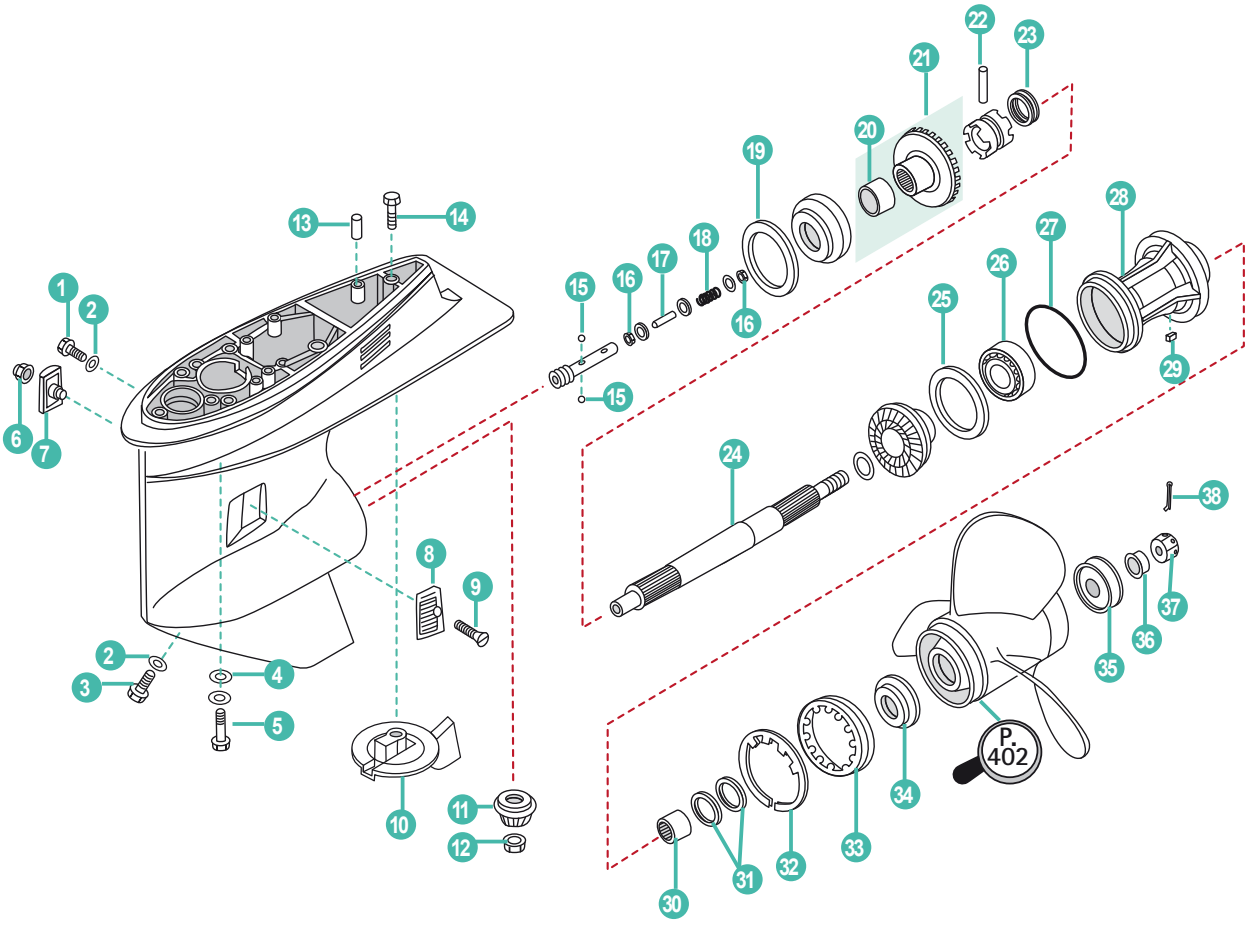

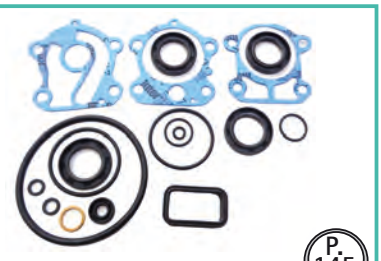

REF	OEM
REC67F-W0001-20	67F-W0001-20

P. 145



REF	OEM
REC67F-W0078-00	67F-W0078-00

P. 152



REF
REC80W90U3
REC80W90U6
RECGREU1
RECGREU12

P. 43

	REF	OEM				
1	REC90340-08002	90340-08002	TORNILLO DRENAJE	BOLT, DISCHARGING OIL	VITE DRENAGGIO	BOUCHON DE VIDANGE
2	REC90430-08020	90430-08003	JUNTA	GASKET	GUARNIZIONE	JOINT
3	REC688-45341-00	688-45341-10	TORNILLO DRENAJE	BOLT, DISCHARGING OIL	VITE DRENAGGIO	BOUCHON DE VIDANGE
4	PAGB/T97.1-8	92995-10600	ARANDELA	WASHER	RONDELLA	RONDELLE
5	REC97075-10040	97075-10040	PERNO	STUD	BULLONE	BOULON
6	PAGB/T6182-M5	90185-05002	TUERCA	LOCK NUT	DADO	ÉCROU
7	REC6H1-45215-00	6H1-45215-00	CUBIERTA ENTRADA AGUA B	WATER INLET B	COPERCHIO ACQUA B	GRILLE D'ENTREE D'EAU B
8	REC6H1-45214-00	6H1-45214-00	CUBIERTA ENTRADA AGUA A	WATER INLET A	COPERCHIO ACQUA A	GRILLE D'ENTREE D'EAU A
9	REC90151-05M00	90152-05000	TORNILLO	SCREW	VITE	VIS
10	CM67F-45371-00A	67F-45371-00	ÁNODO	ANODE	ANODO	ANODE
11	REC6D9-45551-00	6D9-45551-00	PIÑÓN ATAQUE	INITIATIVE GEAR	MARCIA INIZIATIVA	PIGNON D'ATTAQUE
12	REC90170-16M01	90170-16M01	TUERCA	LOCK NUT	DADO	ÉCROU
13	REC93606-12019	93606-12019	PASADOR	PIN	SPINOTTO	PIN
14	PAT85-00000012	90105-16M67	PERNO	STUD	BULLONE	BOULON
15	REC93503-16003	93503-16003	ESFERA	BALL	SFERA	BILLE
16	REC90183-02M03	90183-02M03	TUERCA	LOCK NUT	DADO	ÉCROU
17	REC6H1-45668-00	6H1-45668-00	EJE DEL ÉMBOLO	FREE SHAFT	BULLONE	ARBRE
18	REC90501-12M48	90501-12M48	MUELLE	SPRING	MOLLA	RESSORT
19	PAT85-040000004-B	688-45567-01	GRUESO 0.10 mm	SHIM 0.10 mm	SPESSORE 0.10 mm	CALE 0.10 mm
20	REC93317-322V0	93317-322V0	COJINETE	BEARING	CUSCINETTO	ROULEMENT
21	REC67F-45560-00	67F-45560-00	PIÑÓN MARCHA AVANTE	POSITIVE GEAR ASSY	PIGNONE MARCIA AVANTI	PIGNON DE MARCHE AVANT
22	REC90250-07M02	90250-07M02	PASADOR	PIN	SPINOTTO	PIN
23	REC688-45633-00	688-45633-00	ANILLO DEL PASADOR	ANNULAR SPRING, CLUTCH	PARAOLIO	RESSORT
24	REC67F-45611-01	67F-45611-01	EJE HÉLICE	PROPELLER SHAFT	ASSE ELICA	ARBRE D'HELICE
25	REC67F-45576-00	67F-45576-00	ARANDELA	WASHER	RONDELLA	RONDELLE
26	REC93306-207U0	93306-207U0	COJINETE	BEARING	CUSCINETTO	ROULEMENT
27	REC93210-86M39	93210-86M39	TÓRICA	O-RING	O-RING	JOINT TORIQUE
28	REC67F-45331-00-CA	67F-45331-00-94	DIÁBOLO	BEARING	DIAVOLO	DIABOLO
29	REC90282-04010	90282-04010	CHAVETA RECTA	KEY	CHIAVETTA	CHAVETTE
30	REC93317-325U0	93317-325U0	COJINETE	BEARING	CUSCINETTO	PALIER
31	REC93101-25M03	93101-25M03	RETÉN DE ACEITE	OIL SEAL	PARAOLIO	JOINT SPI
32	REC688-45383-01	688-45383-02	ARANDELA	WASHER	RONDELLA	RONDELLE
33	REC688-45384-00	688-45384-02	TUERCA	NUT	DADO	ÉCROU
34	REC688-45987-00	688-45987-01	ESPACIADOR	SPACER	DISTANZIALE	ENTRETOISE
35	REC67F-45997-00	67F-45997-00	ESPACIADOR	SPACER	DISTANZIALE	ENTRETOISE
36	REC90389-25M00	90389-25M00	CASQUILLO HÉLICE	WASHER	GHIERA ELICA	RONDELLE D'HELICE
37	REC90171-16011	90171-16011	TUERCA	LOCK NUT	DADO	ÉCROU
38	REC91490-40030	91490-40025	PASADOR	PIN	SPINOTTO	CLAVETTE

4T STROKES F80A/B • F100A/D

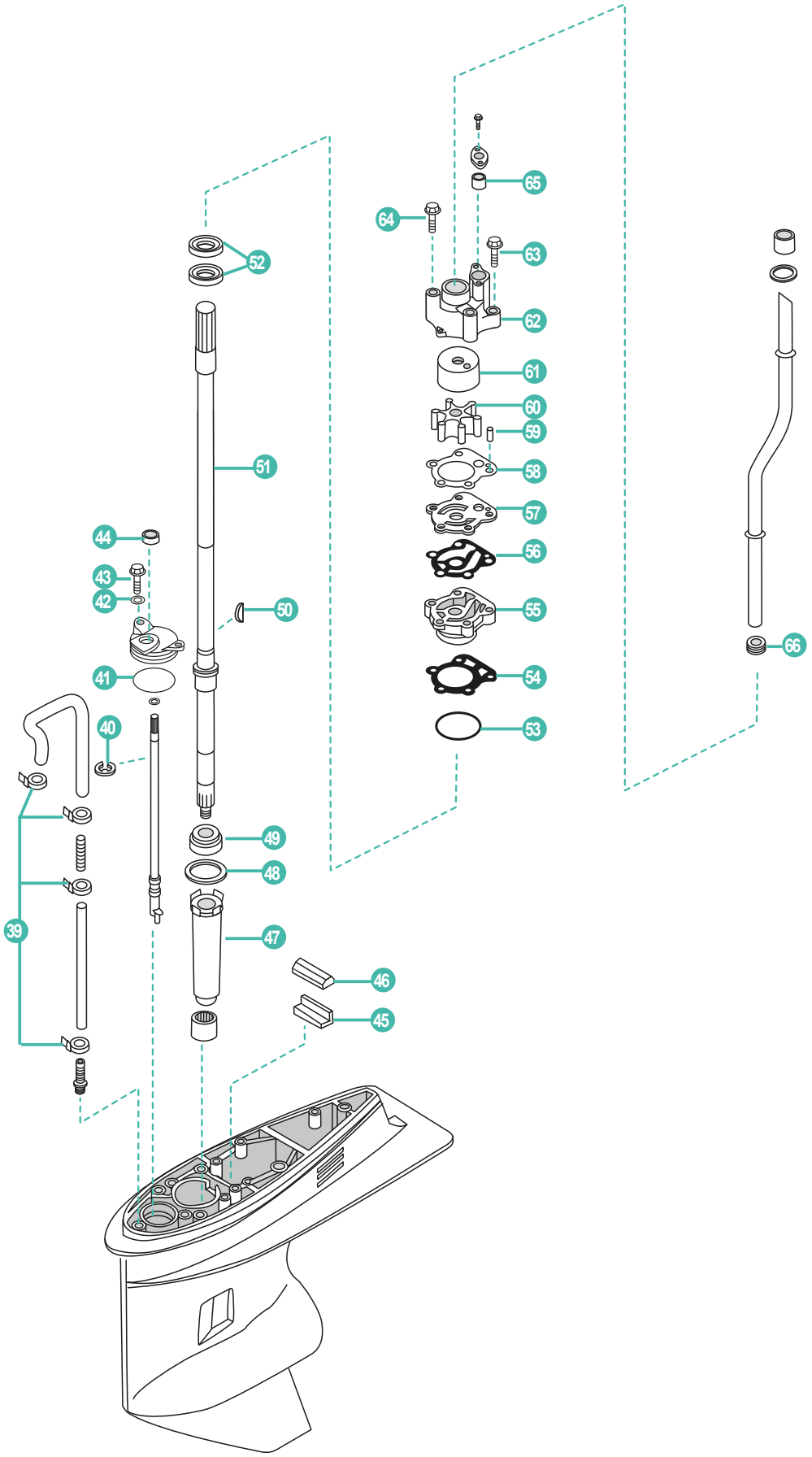

	REF	OEM				
39	PAHT-2.5X60	90465-11M10	BRIDA	CLAMP	FLANGIA	COLLIER
40	REC99001-08600-00	99001-08600	ARANDELA	WASHER	RONDELLA	RONDELLE
41	REC93210-49046	93210-49046	TÓRICA	O-RING	O-RING	JOINT TORIQUE
42	PAGB/T97.1-6	92995-06600	ARANDELA	WASHER	RONDELLA	RONDELLE
43	PAGB/T5783-M6X16	97095-06016	PERNO HEXAGONAL	HEXAGON BOLT	BULLONE ESSAGONALE	BOULON HEXAGONAL
44	REC93106-09014	93106-09014	RETÉN DE ACEITE	OIL SEAL	PARAOLIO	JOINT SPI
45	REC663-45376-00	663-45376-00-94	GUÍA SELLO DE GOMA	GUIDE RUB. SEAL	GUIDA PARAOLIO	GUIDE
46	REC688-45375-00	63D-45375-00	RETEN DAMPER	DAMPER WASHER	PARAOLIO DAMPER	JOINT SILENT BLOC
47	REC688-45536-01	688-45536-01	CAMISA EJE	SLEEVE, DRIVE	TUBO GUIDA	RONDELLE
48	PAT85-040000003-B	688-45587-01	GRUESO 0.10 mm	SHIM 0.10 mm	SPESSORE 0.10 mm	CALE 0.10 mm
49	REC93332-000U3	93332-000U3	COJINETE	BEARING	CUSCINETTO	ROULEMENT
50	REC90280-04M04	90280-04M04	CUÑA	KEY WOODRUFF	CHIAVETTA	CLAVETTE
51	REC67F-45501-10	67F-45501-10	EJE VERTICAL L (21,1")	DRIVE SHAFT L (21,1")	ALBERO TRANSON L (21,1")	ARBRE VERTICAL L (21,1)"
52	REC93101-25M03	93101-25M03	RETÉN DE ACEITE	OIL SEAL	PARAOLIO	JOINT SPI
53	REC93210-46044	93210-46044	TÓRICA	O-RING	O-RING	JOINT TORIQUE
54	REC688-44316-00	688-44316-00	JUNTA	GASKET	GUARNIZIONE	JOINT
55	REC688-44341-01	6D8-44341-01	CUERPO RETENES BOMBA DE AGUA	HOUSING WATER PUMP	CORPO POMPA	BASE DE POMPE À EAU
56	REC688-44324-00	688-44324-A0	JUNTA	GASKET	GUARNIZIONE	JOINT
57	REC67F-44323-00	67F-44323-00	PLACA EXTERIOR	WEAR PLATE	COPERCHIO	PLAQUE DE POMPE À EAU
58	REC688-44315-00	688-44315-A0	JUNTA	GASKET	GUARNIZIONE	JOINT
59	PAF25-04000007	93604-10M03	PASADOR	PIN	SPINOTTO	LEVIER
60	REC67F-44352-00	67F-44352-00	TURBINA	IMPELLER	GIRANTE	TURBINE
61	REC67F-44322-00	67F-44322-00	TAPA, BOMBA AGUA	COVER, INNER WATER PUMP	COPERCHIO, POMPE ACQUA	INSERT DE POMPE À EAU
62	REC67F-44311-01	67F-44311-00	CUERPO BOMBA AGUA	HOUSING, WATER PUMP	CORPO POMPA	CORPS DE POMPE À EAU
63	REC90119-08M13	90119-08M13	TORNILLO CON ARANDELA	SCREW WITH WASHER	VITE CON RONDELLA	VIS AVEC RONDELLE
64	REC90119-08M87	90119-08M87	TORNILLO CON ARANDELA	SCREW WITH WASHER	VITE CON RONDELLA	VIS AVEC RONDELLE
65	REC663-44366-00	663-44366-00	RETEN TUBO AGUA	DAMPER, WATER SEAL	GHIERA	JOINT DE TUBE D'EAU
66	PAT40-02000002	663-44367-00	GOMA DEL SELLO DE AGUA	GUIDE BUSHING, WATER PIPE	PARAOLIO	MAUCHON CAOUTCHOUC DE PIPE D'EAU

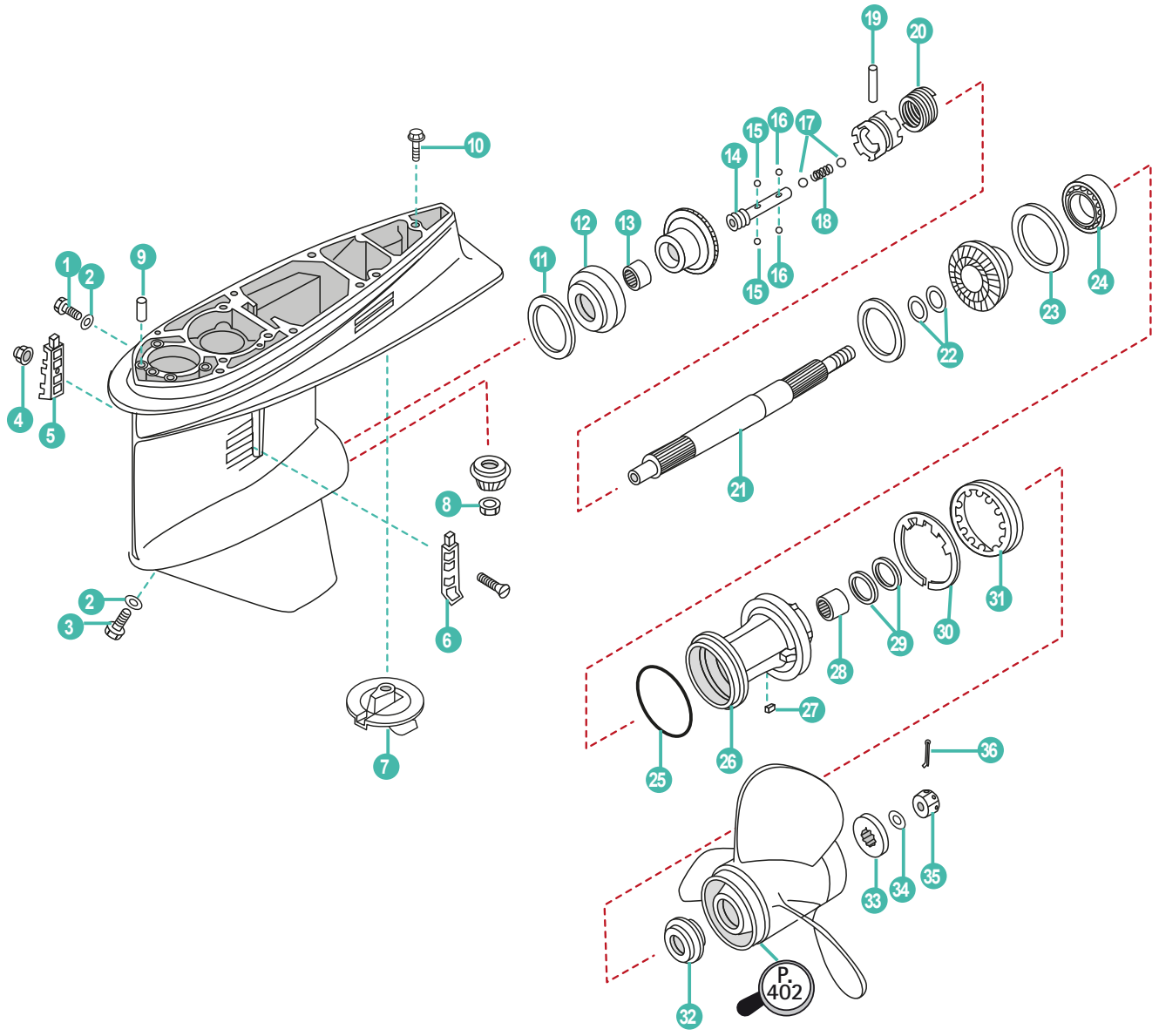

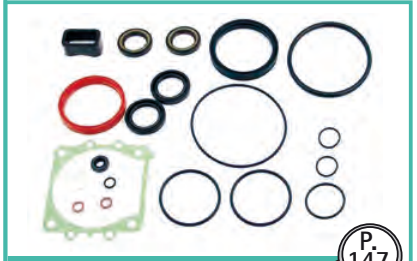

REF	OEM
REC68V-W0001-20	68V-W0001-20

P. 147

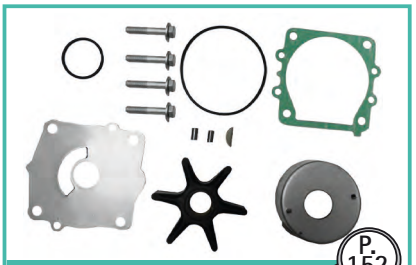

REF	OEM
REC68V-W0078-00	68V-W0078-00

P. 152



REF
REC80W90U3
REC80W90U6
RECGREU1
RECGREU12

P. 43

	REF	OEM				
1	REC90340-08002	90340-08002	TORNILLO DRENAJE	BOLT, DISCHARGING OIL	VITE DRENAGGIO	BOUCHON DE VIDANGE
2	REC90430-08020	90430-08003	JUNTA	GASKET	GUARNIZIONE	JOINT
3	REC688-45341-00	688-45341-10	TORNILLO DRENAJE	BOLT, DISCHARGING OIL	VITE DRENAGGIO	BOUCHON DE VIDANGE
4	PAGB/T6182-M5	90185-05002	TUERCA	LOCK NUT	DADO	ÉCROU
5	REC688-45215-02	688-45215-02	CUBIERTA ENTRADA AGUA **B**	WATER INLET **B**	COPERCHIO ACQUA **B**	GRILLE D'ENTREE D'EAU **B**
6	REC688-45214-02	688-45214-02	CUBIERTA ENTRADA AGUA **A**	WATER INLET **A**	COPERCHIO ACQUA **A**	GRILLE D'ENTREE D'EAU **A**
7	CM6E5-45371-01A	6E5-45371-00	ÁNODO	ANODE	ANODO	ANODE
8	REC90170-16M01	90170-16M01	TUERCA	LOCK NUT	DADO	ÉCROU
9	REC93608-12M05	93608-12M05	PASADOR	PIN	SPINOTTO	PIN
10	PAT85-00000012	90105-10M00	TORNILLO	SCREW	VITE	VIS
11	REC6E5-45567-01	6E5-45567-01	KIT GRUESOS 0.12 - 0.50 mm	SHIM SET 0.12 - 0.50 mm	KIT SPESSORI 0.12 - 0.50 mm	KIT CALES 0.12 - 0.50 mm
12	REC93332-000U7	93332-000U7	COJINETE	BEARING	CUSCINETTO	ROULEMENT
13	REC93315-425U7	93315-425U7	COJINETE	BEARING	CUSCINETTO	ROULEMENT
14	REC6E5-45634-01	6E5-45634-01	PASADOR DESPLAZABLE	SLIDE SHIFT	SPINOTTO SCORREVOLE	PIN REGLABLE
15	REC93507-32031	93507-32009	ESFERA	BALL	SFERA	BILLE
16	REC93503-16003	93503-16003	ESFERA	BALL	SFERA	BILLE
17	REC93511-32027	93511-32027	ESFERA	BALL	SFERA	BILLE
18	REC90501-16M37	90501-16M37	MUELLE	SPRING	MOLLA	RESSORT
19	REC90250-08M07	90250-08M07	PASADOR	PIN	SPINOTTO	LEVIER
20	REC6E5-45633-01	6E5-45633-01	ANILLO DEL PASADOR	ANNULAR SPRING, CLUTCH	ANELLO SELETTORE	RESSORT
21	REC6E5-45611-00	6E5-45611-00	EJE HÉLICE	PROPELLER SHAFT	ASSE ELICA	ARBRE D'HELICE
22	REC90201-30M92	90201-30M92	ARANDELA	WASHER	RONDELLA	RONDELLE
23	REC6E5-45576-00	6E5-45576-00	ARANDELA	WASHER	RONDELLA	RONDELLE
24	REC93306-208U0	93306-208U0	COJINETE	BEARING	CUSCINETTO	ROULEMENT
25	REC93210-86M39	93210-86M39	TÓRICA	O-RING	O-RING	JOINT TORIQUE
26	REC6E5-45332-00-94	6E5-45332-00-CA	DIÁBOLO	GEAR HOUSING	DIAVOLO	DIABOLO
27	REC90282-04010	90282-04010	CHAVETA RECTA	KEY	CHIAVETTA	CHAVETTE
28	REC93315-430U8	93315-430U8	COJINETE	BEARING	CUSCINETTO	ROULEMENT
29	REC93101-30M17	93101-30M17	RETÉN DE ACEITE	OIL SEAL	PARAOLIO	JOINT SPI
30	REC688-45383-01	688-45383-02	ARANDELA	WASHER	RONDELLA	RONDELLE
31	REC688-45384-00	688-45384-02	TUERCA	NUT	DADO	ÉCROU
32	REC6E5-45987-00	63P-45987-00	ESPACIADOR	SPACER	DISTANZIALE	ENTRETOISE
33	REC688-45997-00	688-45997-01	ESPACIADOR	SPACER	DISTANZIALE	ENTRETOISE
34	REC92990-18200	92990-18200	ARANDELA	WASHER	RONDELLA	RONDELLE
35	REC90171-18M04	90171-18M04	TUERCA	LOCK NUT	DADO	ÉCROU
36	REC91490-40030	91490-40030	PASADOR	PIN	SPINOTTO	CLAVETTE

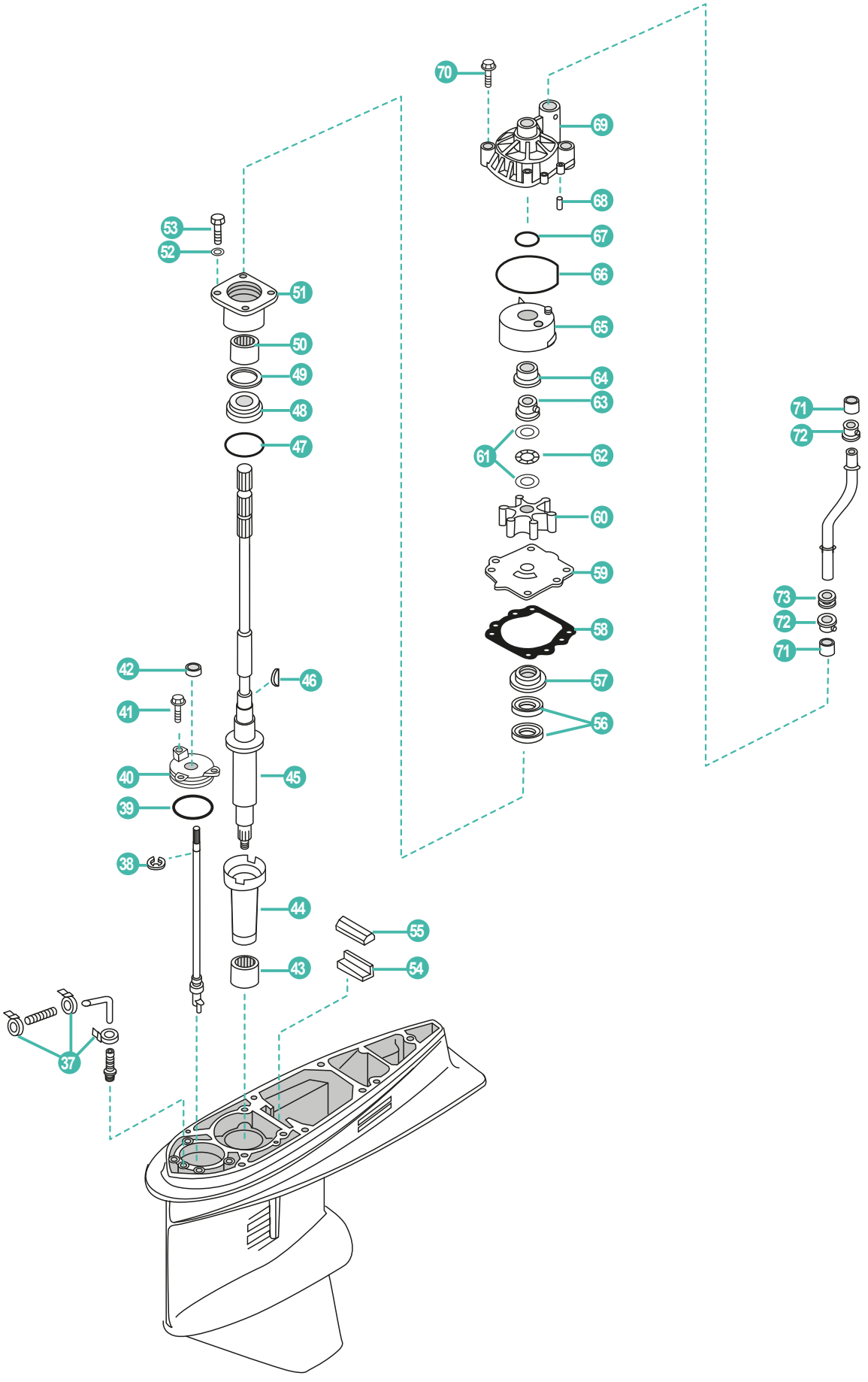
70
69
68
67
66
65
64
63
61
62
60
59
58
57
56
53
52
51
50
49
48
47
42
41
40
39
38
46
45
44
43
55
54
37
71
72
73
72
71

	REF	OEM				
37	PAHT-2.5X60	90465-11M10	BRIDA	CLAMP	FLANGIA	COLLIER
38	REC99001-08600-00	99001-08600	ARANDELA	WASHER	RONDELLA	RONDELLE
39	REC93210-58677	93210-58144	TÓRICA	O-RING	O-RING	JOINT TORIQUE
40	REC6E5-45321-00	6E5-45321-00	TAPA CAMBIO	PLATE	COPERCHIO CAMBIO	COUVERCLE
41	REC90119-06M10	90119-06M10	TORNILLO CON ARANDELA	SCREW WITH WASHER	VITE CON RONDELLA	VIS AVEC RONDELLE
42	REC93106-09014	93106-09014	RETÉN DE ACEITE	OIL SEAL	PARAOLIO	JOINT SPI
43	REC93315-628U9	93315-628U9	COJINETE	BEARING	CUSCINETTO	ROULEMENT
44	REC6E5-45536-00	6E5-45536-00	CAMISA EJE DE MANDO	SLEEVE	CAMICIA	BAGUE
45	REC68V-45501-10	68V-45501-10	EJE TRANSMISION L 20.3"	DRIVE SHAFT L 20.3"	ASSE TRASMISSIONE L 20,3"	ARBRE DE TRANSMISSION L 20,3"
46	REC90280-04M05	90280-04M05	CUÑA	KEY WOODRUFF	CHIAVETTA	CLAVETTE
47	REC93210-54534	93210-55M14	TÓRICA	O-RING	O-RING	JOINT TORIQUE
48	REC93341-930V2	93341-930V2	COJINETE	BEARING	CUSCINETTO	ROULEMENT
49	REC6E5-45587-01	6E5-45587-01	KIT GRUESOS 0.12 - 0.50 mm	SHIM SET 0.12 - 0.50 mm	KIT SPESSORI 0.12 - 0.50 mm	KIT CALES 0.12 - 50 mm
50	REC93317-330U2	93317-330U2	COJINETE	BEARING	CUSCINETTO	ROULEMENT
51	REC6E5-45331-00-94	6E5-45331-00-9S	DIÁBOLO	GEAR HOUSING	DIAVOLO	DIABOLO
52	PAGB/T97.1-8	92995-08600	ARANDELA	WASHER	RONDELLA	RONDELLE
53	PAGB/T5783-M8X25	97095-08025	PERNO	BOLT	VOTE	BOULON
54	REC663-45376-00	663-45376-00	GUÍA SELLO DE GOMA	GUIDE RUB. SEAL	GUIDA PARAOLIO	GUIDE
55	REC688-45375-00	63D-45375-00	RETEN DAMPER	DAMPER WASHER	PARAOLIO DAMPER	JOINT SILENT BLOC
56	REC93101-28M16	93101-28M16	RETÉN DE ACEITE	OIL SEAL	PARAOLIO	JOINT SPI
57	REC6E5-45344-00	6E5-45344-00	TAPA RETEN	RETAINER	COPERCHIO PARAOLIO	RETENUE
58	REC6E5-44315-A0	6E5-44315-A0	JUNTA	GASKET	GUARNIZIONE	JOINT
59	REC68V-44323-00	6EK-44323-00	TAPA BOMBA	OUTER PLATE	COPERCHIO POMPA	PLAQUE DE POMPE À EAU
60	REC6E5-44352-01	6E5-44352-01	TURBINA	IMPELLER	GIRANTE	TURBINE
61	REC90201-22M01	90201-22M01	ARANDELA	WASHER	RONDELLA	RONDELLE
62	REC90206-22M19	90206-22M19	ARANDELA ONDULADA	WAVE WASHER	RONDELLA ONDULATA	RONDELLE
63	REC61A-45538-00	61A-45538-00	ESPACIADOR	SPACER	SPESSORE	ENTRETOISE
64	REC61A-45527-00	61A-45527-00	CASQUILLO CUERPO BOMBA	COLLAR	BOCCOLA CORPO POMPA	BAGUE POMPE À EAU
65	REC61A-44322-02	61A-44322-02	TAPA, BOMBA AGUA	COVER, INNER WATER PUMP	COPERCHIO, POMPE D'EAU	INSERT DE POMPE À EAU
66	REC93210-86M38	93210-86M38	TÓRICA	O-RING	O-RING	JOINT TORIQUE
67	REC93210-37160	93210-37160	TÓRICA	O-RING	O-RING	JOINT TORIQUE
68	REC93606-12019	93606-12019	PASADOR	PIN	SPINOTTO	LEVIER
69	REC61A-44311-00	61A-44311-01	CUERPO BOMBA AGUA	HOUSING, WATER PUMP	CORPO POMPA	CORPS DE POMPE À EAU
70	REC90119-08M14	90119-08M14	TORNILLO CON ARANDELA	SCREW WITH WASHER	VITE CON RONDELLA	VIS AVEC RONDELLE
71	REC6E5-44365-00	6E5-44365-00	GOMA DEL SELLO DE AGUA	DAMPER WATER TUBE	GUARNIZIONE	BAGUE DE TUBE D'EAU
72	REC6E5-44312-00	6E5-44312-00	CUBIERTA CAJA DE BOMBA DE AGUA	PUMP COVER	COPERCHIO CORPO ACQUA	PLAQUE POMPE À EAU
73	REC6E5-44366-00	6E5-44366-00	FLECTOR	DAMPER WATER SEAL	GUARNIZIONE	JOINT

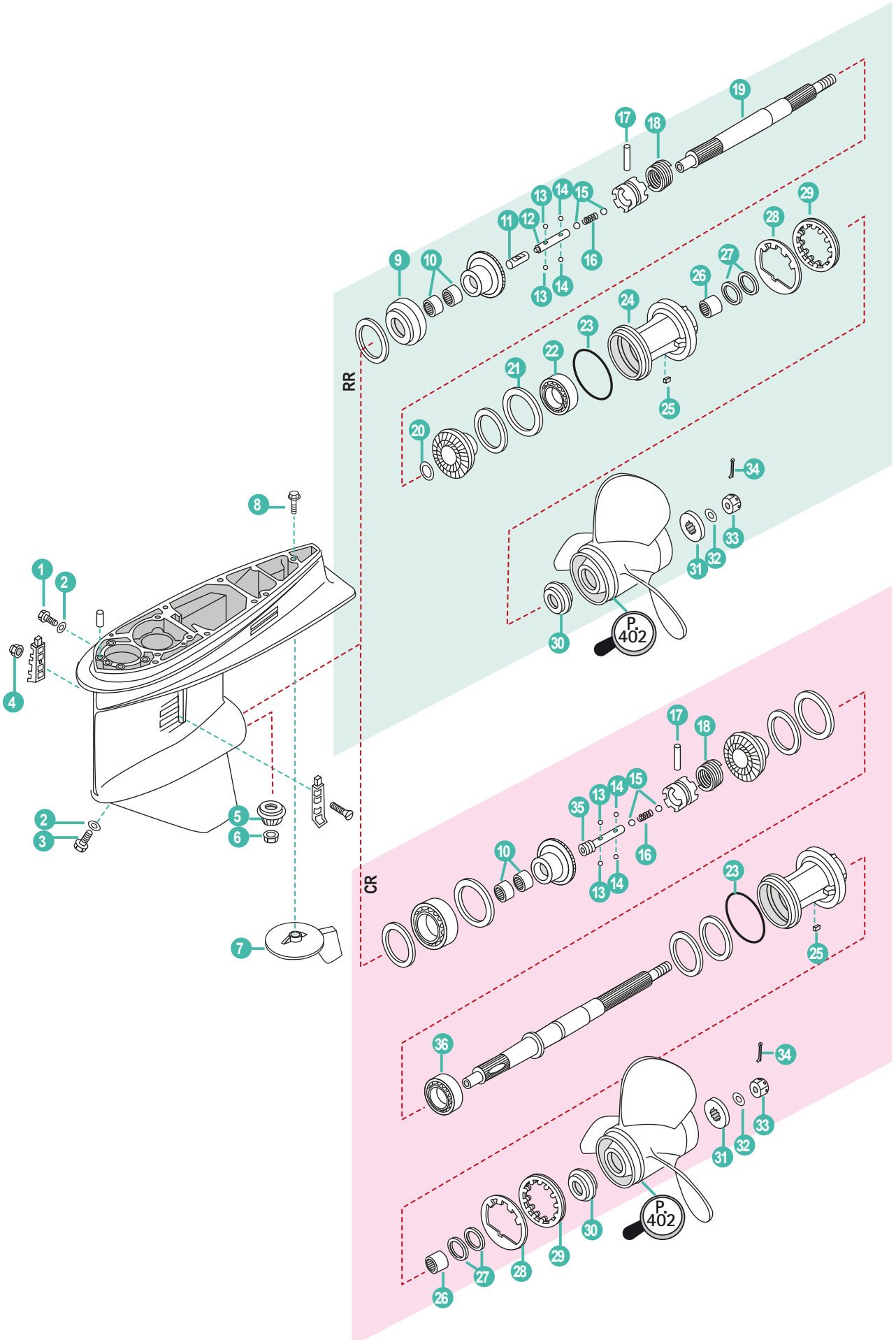
RR
CR
P. 402
P. 402

	REF	OEM				
	REC416-B20F	63P-45300-02-8D	CONJUNTO INFERIOR RR (L) SÓLO PARA F150	COMPLETE GEARCASE V6 (L) ONLY F150	PIEDE COMPLETO (L) SOLO F150	EMBASE COMPLETE (L) POUR F150
	REC416-B25F	63P-45300-12-8D	CONJUNTO INFERIOR RR (X) SÓLO PARA F150	COMPLETE GEARCASE V6 (X) ONLY F150	PIEDE COMPLETO V6 (X) SOLO F150	EMBASE COMPLETE V6 (X) POUR F150
	REC418-B25F	64P-45300-12-8D	CONJUNTO INFERIOR CR (X) SÓLO PARA F150	COMPLETE GEARCASE V6 CR (X) ONLY F150	PIEDE COMPLETE CR (X) FOLO F150	EMBASE COMPLETE CONTRE ROTATION (X) POUR F150
1	REC90340-08002	90304-08002	TORNILLO DRENAJE	BOLT, DISCHARGING OIL	VITE DRENAGGIO	BOUCHON DE VIDANGE
2	REC90430-08020	90430-08020	JUNTA	GASKET	GUARNIZIONE	JOINT
3	REC688-45341-00	688-45341-10	TORNILLO DRENAJE	BOLT, DISCHARGING OIL	VITE DRENAGGIO	BOUCHON DE VIDANGE
4	PAGB/T6182-M5	90185-05002	TUERCA	LOCK NUT	DADO	ÉCROU
5	REC63P-45551-00	63P-45551-00	PIÑÓN ATAQUE	INITIATIVE GEAR	MARCIA INIZIATIVA	PIGNON D'ATTAQUE
6	REC90170-16M01	90170-16M01	TUERCA	LOCK NUT	DADO	ÉCROU
7	CM6J9-45371-01A	6J9-45371-01	ÁNODO	ANODE	ANODO	ANODE
8	PAT85-00000012	90105-10M00	TORNILLO	SCREW	VITE	VIS
9	REC93332-000V3	93332-000V3	COJINETE	BEARING	CUSCINETTO	ROULEMENT
10	REC93315-425V3	93315-425V3	COJINETE	BEARING	CUSCINETTO	ROULEMENT
11	REC6E5-45641-03	6E5-45641-03	EJE	SHAFT	ASSE	ARBRE
12	REC6E5-45634-01	6E5-45634-01	PASADOR DESPLAZABLE	SLIDE SHIFT	SPINOTTO SCORREVOLE	PIN REGLABLE
13	REC93507-32031	93507-32009	ESFERA	BALL	SFERA	BILLE
14	REC93503-16003	93503-16003	ESFERA	BALL	SFERA	BILLE
15	REC93511-32027	93511-32017	ESFERA	BALL	SFERA	BILLE
16	REC90501-16M37	90501-16M37	MUELLE	SPRING	MOLLA	RESSORT
17	REC90250-08M07	90250-08M07	PASADOR	PIN	SPINOTTO	PIN
18	REC6E5-45633-01	6E5-45633-01	ANILLO DEL PASADOR	ANNULAR SPRING, CLUTCH	ANELLO	RESSORT
19	REC6J9-45611-00	6J9-45611-01	EJE HÉLICE	PROPELLER SHAFT	ASSE ELICA	ARBRE D'HELICE
20	REC90201-30M92	90201-30M92	ARANDELA	WASHER	RONDELLA	RONDELLE
21	REC6G5-45576-10	6G5-45576-10	ARANDELA EMPUJE	WASHER, THRUST	RONDELLA DI SPINTA	RONDELLE D'APPUI
22	REC93306-209U0	93306-209U0	COJINETE	BEARING	CUSCINETTO	ROULEMENT
23	REC93210-97M55	93210-97M55	TÓRICA	O-RING	O-RING	JOINT TORIQUE
24	REC6J9-45332-00-CA	6J9-45332-00-CA	DIÁBOLO	GEAR HOUSING	DIAVOLO	DIABOLO
25	REC90282-04M00	90282-04M00	CHAVETA RECTA	KEY	CHIAVETTA	CLAVETTE
26	REC93315-43061	93315-43061	COJINETE	BEARING	CUSCINETTO	ROULEMENT
27	REC93101-30M17	93101-30M17	RETÉN DE ACEITE	OIL SEAL	PARAOLIO	JOINT SPI
28	REC6G5-45383-01	6G5-45383-01	ARANDELA	WASHER	RONDELLA	RONDELLE
29	REC6G5-45384-00	6G5-45384-00	TUERCA	NUT	DADO	ÉCROU
30	REC6E5-45987-00	63P-45987-00	ESPACIADOR	SPACER	DISTANZIALE	ENTRETOISE
31	REC688-45997-00	688-45997-01	ESPACIADOR	SPACER	DISTANZIALE	ENTRETOISE
32	REC92990-18200	92990-18200	ARANDELA	WASHER	RONDELLA	RONDELLE
33	REC90171-18M04	90171-18M04	TUERCA	LOCK NUT	DADO	ÉCROU
34	REC91490-40030	91490-40030	PASADOR	PIN	SPINOTTO	CLAVETTE
			CONTRA ROTACIÓN	COUNTER ROTATION	CONTRO ROTANTE	CONTRE
35	REC6E5-45634-01	6E5-45634-02	DESLIZADOR CAMBIO	SLIDE SHIFT	SPINOTTO SCORREVOLE	PIN REGLABLE
36	REC93332-00048	93332-00048	COJINETE	BEARING	CUSCINETTO	ROULEMENT

4T STROKES F150A/T/B/D (FL) • F175A/C • F200F/G

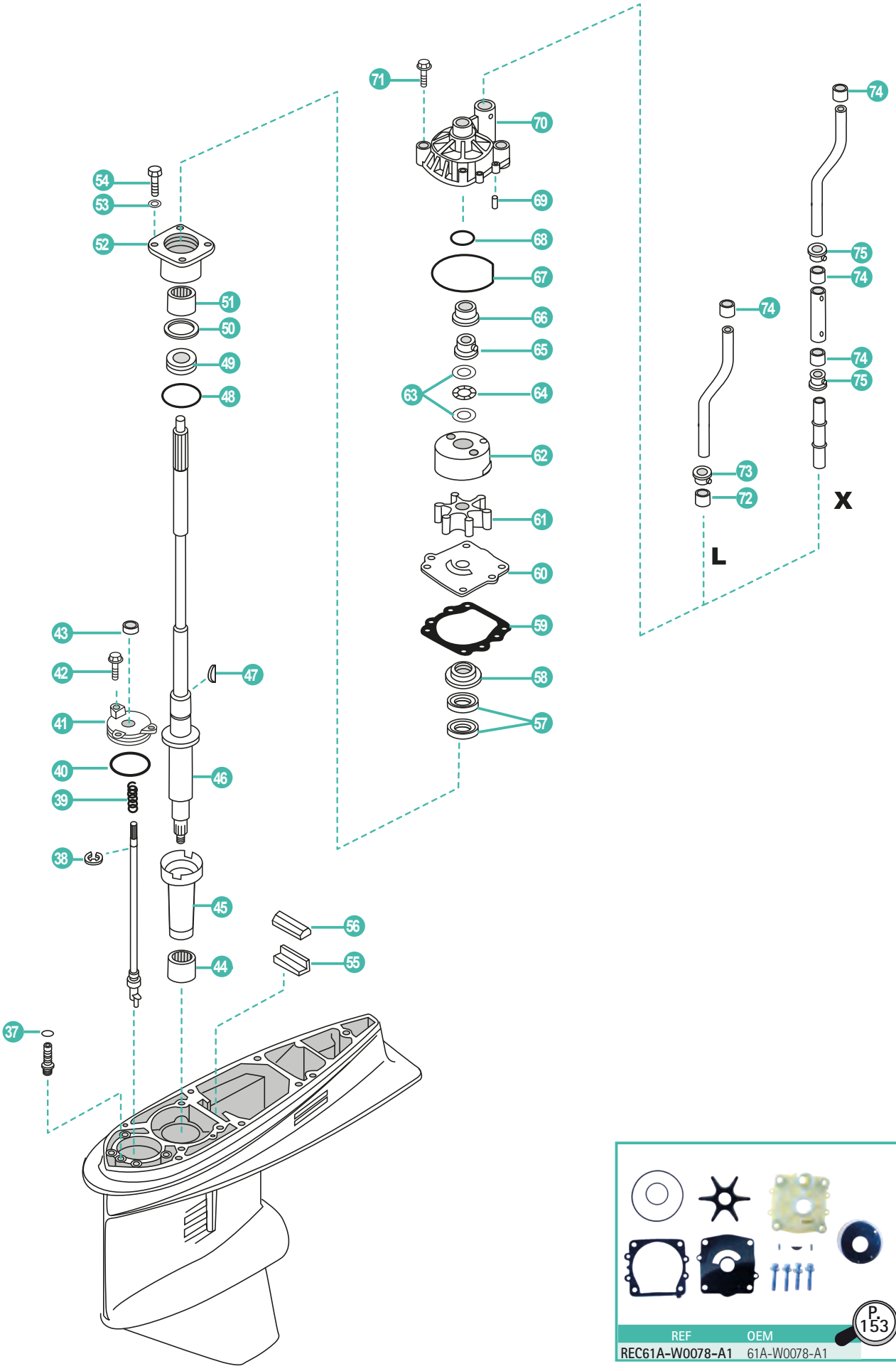

	REF	OEM				
37	REC93210-07540	93210-07003	TÓRICA	O-RING	O-RING	JOINT TORIQUE
38	REC99001-08600-00	99001-08600	CLIP	CLIP	CLIP	CLIP
39	REC90501-11M10-00	90501-11M10	RESORTE DE COMPRESIÓN	SPRING	MOLLA	RESSORT
40	REC93210-58677	93210-58144	TÓRICA	O-RING	O-RING	JOINT TORQUE
41	REC6E5-45321-00	6E5-45321-00	TAPA CAMBIO	PLATE	COPERCHIO CAMBIO	COUVERCLE
42	REC90119-06M10	90119-06M10	TORNILLO CON ARANDELA	SCREW WITH WASHER	VITE CON RONDELLA	VIS AVEC RONDELLE
43	REC93106-09014	93106-09014	RETÉN DE ACEITE	OIL SEAL	PARAOLIO	JOINT SPI
44	REC93311-928U5	93311-928U5	COJINETE	BEARING	CUSCINETTO	ROULEMENT
45	REC6E5-45536-00	6E5-45536-01	CAMISA EJE DE MANDO	SLEEVE	CAMICIA	BAGUE
46	REC63P-45501-00	63P-45501-00	EJE TRASMISION 20" (L)	DRIVE SHAFT 20" (L)	ALBERO DI TRASMISSIONE 20" (L)	ARBRE TRASMISION 20" (L)
	REC63P-45501-10	63P-45501-10	EJE TRASMISION 25" (X)	DRIVE SHAFT 25" (X)	ALBERO DI TRASMISSIONE 25" (X)	ARBRE TRASMISION 25" (X)
47	REC90280-04M05	90280-04M05	CUÑA	KEY WOODRUFF	CHIAVETTA	CLAVETTE
48	REC93210-54534	93210-55M14	TÓRICA	O-RING	O-RING	JOINT TORIQUE
49	REC93341-930V2	93341-930V2	COJINETE	BEARING	CUSCINETTO	ROULEMENT
50	REC6E5-45587-01	6E5-45587-01	KIT GRUESOS 0.10 - 0.50 mm	SHIM SET 0.10 - 0.50 mm	KIT SPESSORI 0.10 - 0.50 mm	KIT CALES 0.10- 0.50 mm
51	REC93317-330U2	93317-330U2	COJINETE	BEARING	CUSCINETTO	ROULEMENT
52	REC6E5-45331-00-94	6E5-45331-00-9S	DIÁBOLO	GEAR HOUSING	DIAVOLO	DIABOLO
53	PAGB/T97.1-8	92995-08600	ARANDELA	WASHER	RONDELLA	RONDELLE
54	PAGB/T5783-M8X25	97095-08025	PERNO	BOLT	BULLONE	BOULON
55	REC663-45376-00	663-45376-00-94	GUÍA SELLO DE GOMA	GUIDE RUB. SEAL	GUIDA PARAOLIO	GUIDE
56	REC688-45375-00	688-45375-00	RETEN DAMPER	DAMPER WASHER	PARAOLIO DAMPER	JOINT SILENT BLOC
57	REC93101-28M16	93101-28M16	RETÉN DE ACEITE	OIL SEAL	PARAOLIO	JOINT SPI
58	REC6E5-45344-00	6E5-45344-00	CUBIERTA SELLO DE ACEITE	RETAINER	COPERCHIO PARAOLIO	RETENUE
59	REC6E5-44315-A0	6E5-44315-A0	JUNTA	GASKET	GUARNIZIONE	JOINT
60	REC6G5-44323-00	6G5-44323-00	PLACA EXTERIOR DEL CARTUCHO	OUTER PLATE	COPERCHIO POMPA	PLAQUE DE POMPE À EAU
61	REC6E5-44352-01	6E5-44352-01	TURBINA	IMPELLER	GIRANTE	TURBINE
62	REC61A-44322-02	61A-44322-02	ACOPLE INOX	INSERT CARTRIDGE	ACCOPPIAMENTO INOX	INSERT DE POMPE À EAU
63	REC90201-22M01	90201-22M01	ARANDELA	WASHER	RONDELLA	RONDELLE
64	REC90206-22M19	90206-22M19	ARANDELA ONDULADA	WAVE WASHER	RONDELLA ONDULATA	RONDELLE
65	REC61A-45538-00	61A-45538-00	ESPACIADOR	SPACER	SPESSORE	ENTRETOISE
66	REC61A-45527-00	61A-45527-00	CASQUILLO CUERPO BOMBA	COLLAR	BOCCOLA CORPO POMPA	BAGUE POMPE À EAU
67	REC93210-86M38	93210-86M38	TÓRICA	O-RING	O-RING	JOINT TORIQUE
68	REC93210-37160	93210-37160	TÓRICA	O-RING	O-RING	JOINT TORIQUE
69	REC93606-12019	93606-12019	PASADOR	PIN	SPINOTTO	PIN
70	REC61A-44311-00	61A-44311-01	CUERPO BOMBA AGUA	HOUSING, WATER PUMP	CORPO POMPA	CORPS DE POMPE À EAU
71	REC90119-08M14	90119-08M14	TORNILLO CON ARANDELA	SCREW WITH WASHER	VITE CON RONDELLA	VIS AVEC RONDELLE
72	REC6E5-44365-00	6E5-44365-00	GOMA DEL SELLO DE AGUA	DAMPER WATER TUBE	GUARNIZIONE	BAGUE DE TUBE D'EAU
73	REC6E5-44312-00	6E5-44312-00	CUBIERTA CAJA DE BOMBA DE AGUA (L)	WATER PUMP COVER (L)	COPERCHIO POMPA ACQUA (L)	GUIDE DE TBE D'EAU (L)
74	REC6E5-44365-00	6E5-44365-00	GOMA TUBO AGUA	DAMPER WATER TUBE	GUARNIZIONE	BAGUE DE TUBE D'EAU
75	REC6E5-44312-00	6E5-44312-00	CUBIERTA CAJA DE BOMBA DE AGUA (X)	WATER PUMP COVER (X)	COPERCHIO POMPA ACQUA (X)	GUIDE DE TUBE D'EAU (X)



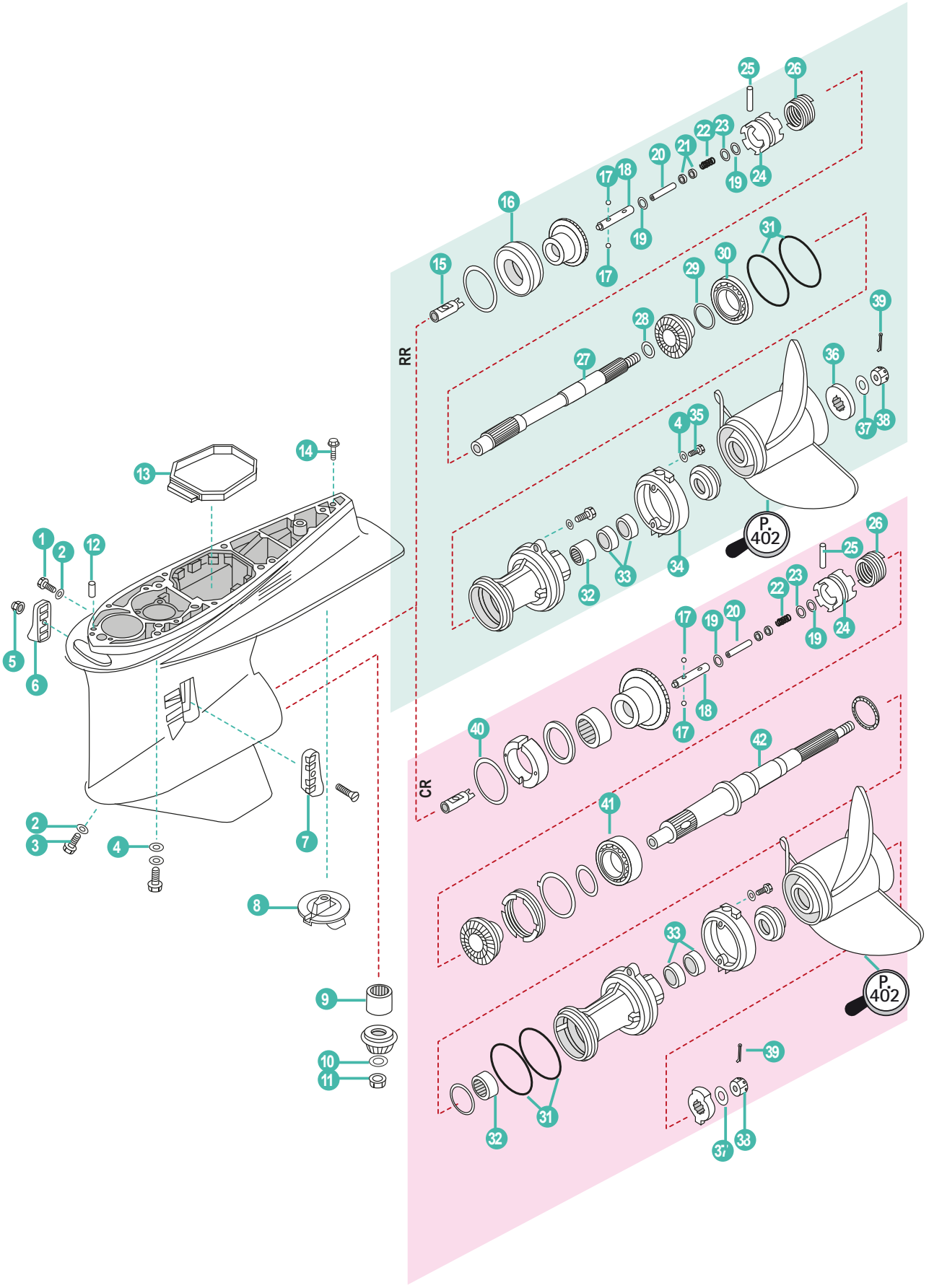
RR
CR
P. 402
P. 402

	REF	OEM				
	REC421-B25F	69J-45300-22-8D	CONJUNTO INFERIOR RR (X)	COMPLETE GEARCASE V6 (X)	PIEDE COMPLETO V6 (X)	EMBASE COMPLETE (X)
1	REC90340-08002	90304-08002	TORNILLO DRENAJE	BOLT, DISCHARGING OIL	VITE DRENAGGIO	BOUCHON DE VIDANGE
2	REC90430-08020	90430-08020	JUNTA	GASKET	GUARNIZIONE	JOINT
3	REC688-45341-00	688-45341-10	TORNILLO DRENAJE	BOLT, DISCHARGING OIL	VITE DRENAGGIO	BOUCHON DE VIDANGE
4	PAGB/T97.1-8	92995-10600	ARANDELA	WASHER	RONDELLA	RONDELLE
5	PAGB/T6182-M5	90185-05002	TUERCA	LOCK NUT	DADO	ÉCROU
6	REC61A-45215-10	61A-45215-11	REJILLA TOMA AGUA ESTRIBOR	WATER SCREEN STARBOARD	GRIGLIA PRESA ACQUA TRIBORDO	GRILLE D'ENTREE D'EAU TRIBORD
7	REC61A-45214-10	61A-45214-11	REJILLA TOMA AGUA BABOR	WATER SCREEN PORT	GRIGLIA PRESA ACQUA BABORDO	GRILLE D'ENTREE D'EAU BABORD
8	CM61A-45371-00A	61A-45371-00	ÁNODO	ANODE	ANODO	ANODE
9	REC93311-83280	93311-83280	COJINETE	BEARING	CUSCINETTO	ROULEMENT
10	REC90201-16M00	90201-16M00	ARANDELA	WASHER	RONDELLA	RONDELLE
11	REC90170-16M19	90170-16M19	TUERCA	LOCK NUT	DADO	ÉCROU
12	REC93608-12M05	93608-12M05	PASADOR	PIN	SPINOTTO	PIN
13	REC69J-45375-00	69J-45375-00	GOMA ESCAPE COLA	EXHAUST DAMPER	GOMMA SCARICO	JOINTD'ECHAPPEMENT
14	PAT85-00000012	90105-10M00	TORNILLO	SCREW	VITE	VIS
15	REC61A-45641-02	61A-45641-02	CAMBIO	SHIFTER	CAMBIO	SHIFTER
16	REC93332-000W1	93332-000W1	COJINETE	BEARING	CUSCINETTO	ROULEMENT
17	REC93501-04011	93501-04011	ESFERA	BALL	SFERA	BILLE
18	REC61A-45634-01	61A-45634-01	PASADOR DESPLAZABLE	SLIDE SHIFT	SPINOTTO SCORREVOLE	PIN REGLABLE
19	REC90183-02M03	90183-02M03	TUERCA DE RESORTE	SPRING NUT	DADO MOLLA	RONDELLE FREIN
20	REC6H1-45668-00	6H1-45668-00	EJE	FREE SHAFT	ASSE	ARBRE
21	REC61A-45635-00	61A-45635-00	ÉMBOLO DE CAMBIO	SHIFT PLUNGER	GOMMINI	SHIFT
22	REC90501-10M77	90501-10M77	RESORTE DE COMPRESIÓN	SPRING	MOLLA	RESSORT
23	REC90201-02M00	90201-02M00	ARANDELA PLANA	WASHER	RONDELLA	RONDELLE
24	REC69J-45631-00	69J-45631-00	EMBRAGUE DE GARRA	CLUTH	SELETTORE	CRABOT
25	REC61A-45632-00	61A-45632-00	PASADOR	PIN	SPINOTTO	LEVIER
26	REC61A-45633-00	61A-45633-00	ANILLO DEL PASADOR	ANNULAR SPRING, CLUTCH	ANELLO	RESSORT
27	REC69J-45611-00	69J-45611-00	EJE	SHAFT	ASSE	ARBRE D'HELICE
28	REC90201-31M00	90201-31M00	ARANDELA PLANA	WASHER	RONDELLA	RONDELLE
29	REC61A-45577-00/60-0	61A-45577-00	KIT GRUESOS (0.10-0.50 mm)	KIT SHIM (0.10-0.50 mm)	KIT SPESSORE (0.10-0.50 mm)	KIT CALES (0.10 - 0.50 mm)
30	REC93306-210U0	93306-210U0	COJINETE	BEARING	CUSCINETTO	ROULEMENT
31	REC93211-04384	93211-04384	TÓRICA	O-RING	O-RING	JOINT TORIQUE
32	REC93315-43061	93315-43061	COJINETE	BEARING	CUSCINETTO	ROULEMENT
33	REC93101-30M17	93101-30M17	RETÉN DE ACEITE	OIL SEAL	PARAOLIO	ROULEMENT
34	REC69J-45361-00-8D	69J-45361-00-8D	FUNDA INFERIOR	CAO LOWER CASING	COVER INFERIORE	COUVERCLE INFERIEUR
35	PAF4-04000001	97095-08020	PERNO	STUD	BULLONE	BOULON
36	REC688-45997-00	688-45997-01	ESPACIADOR AP	DISTANCE WASHER	DISTANZIALE	BRIDE
37	REC92990-18200	92990-18200	ARANDELA PLANA	WASHER	RONDELLA	RONDELLE
38	REC90171-18M04	90171-18M04	TUERCA	LOCK NUT	DADO	ÉCROU
39	REC91490-40030	91490-40030	PASADOR	PIN	SPINOTTO	CLAVETTE
			CONTRA ROTACIÓN	COUNTER ROTATION	CONTRO ROTANTE	CONTRE ROTATION
40	REC61A-45567-00/60-0	61A-45567-00	KIT GRUESOS (0.10-0.50 mm)	KIT SHIM (0.10-0.50 mm)	KIT SPESSORE (0.10-0.50 mm)	KIT CALES (0.10 - 0.50 mm)
41	REC93332-00048	93332-00048	COJINETE	BEARING	CUSCINETTO	ROULEMENT
42	REC69K-45611-00	69K-45611-00	EJE	SHAFT	ASSE	ARBRE D'HELICE

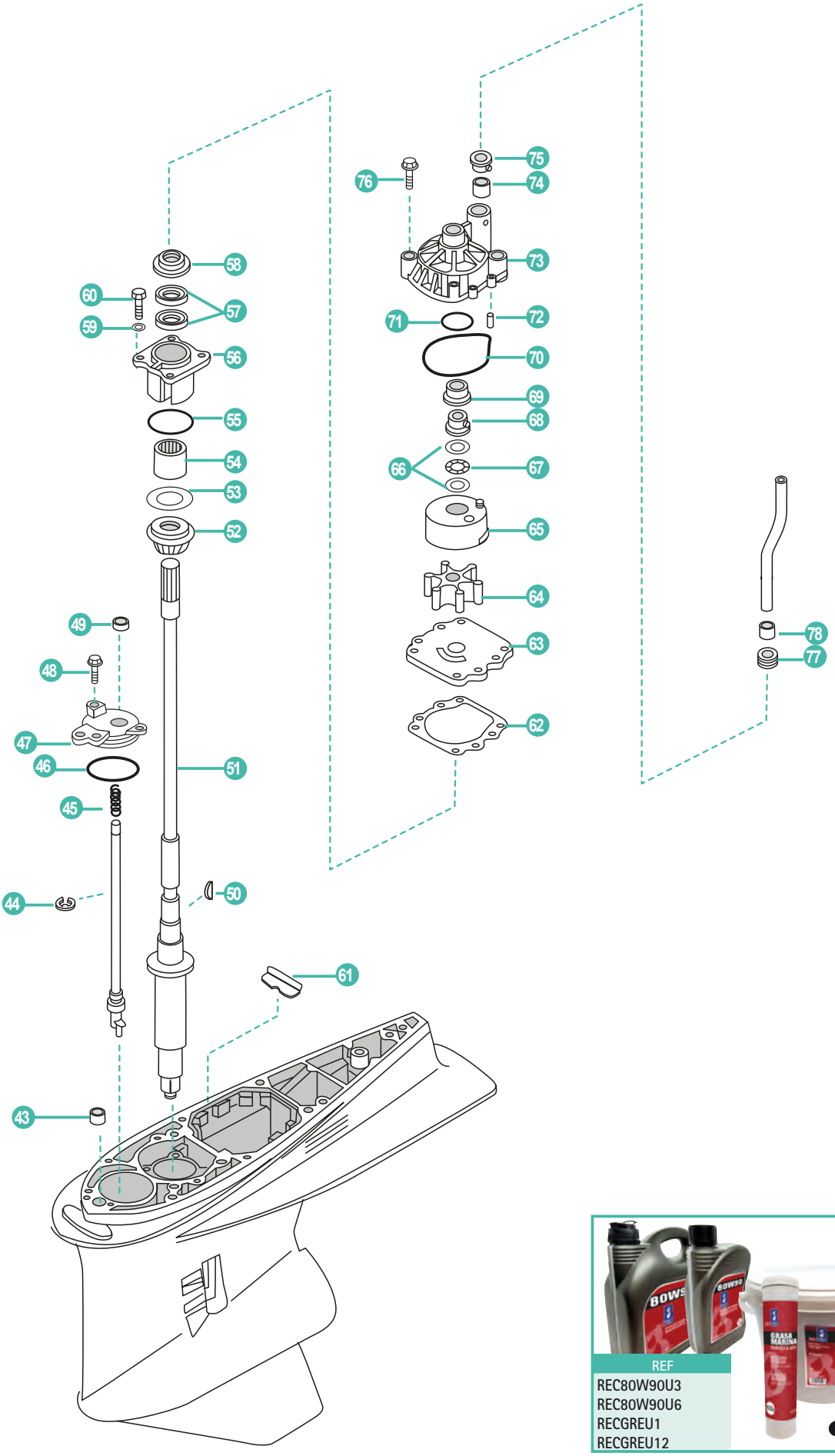

REF
REC80W90U3
REC80W90U6
RECGREU1
RECGREU12

P. 43

	REF	OEM				
43	REC663-44366-00	663-44366-00	RETEN TUBO AGUA	DAMPER, WATER SEAL	GHIERA	JOINT DE TUBE D'EAU
44	REC99001-08600-00	99001-08600	CLIP	CLIP	CLIP	CLIP
45	REC90501-11M10-00	90501-11M10	RESORTE DE COMPRESIÓN	SPRING	MOLLA	RESSORT
46	REC93210-65752-00	93210-64488	TÓRICA	O-RING	O-RING	JOINT TORIQUE
47	REC61A-45321-01	61A-45321-01	TAPA CAMBIO	SHIFT SHAFT COVER	SHIFT SHAFT COVER	COUVERCLE ARBRE DE TRANSMISSION
48	REC90119-06M10	90119-06M10	TORNILLO CON ARANDELA	SCREW WITH WASHER	VITE CON RONDELLA	VIS AVEC RONDELLE
49	REC93106-09014	93106-09014	RETÉN DE ACEITE	OIL SEAL	PARAOLIO	ROULEMENT
50	REC90280-04M05	90280-04M05	CUÑA	KEY WOODRUFF	CHIAVETTA	CLAVETTE
51	REC63P-45501-00	63P-45501-00	EJE TRASMISION 20"	DRIVE SHAFT 20"	ALBERO DI TRASMISSIONE 20"	ARBRE TRASMISION 20"
	REC63P-45501-10	63P-45501-10	EJE TRASMISION 25"	DRIVE SHAFT 25"	ALBERO DI TRASMISSIONE 25"	ARBRE TRASMISION 25"
52	REC93341-93020	93341-93020	COJINETE	BEARING	CUSCINETTO	CLAVETTE
53	REC61A-45587-00/60-0	61A-45587-00	KIT GRUESOS (0.10-0.50 mm)	KIT SHIM (0.10-0.50 mm)	KIT SPESSORE (0.10-0.50 mm)	KIT CALES (0.10 - 0.50 mm)
54	REC93317-330U2	93317-330U2	COJINETE	BEARING	CUSCINETTO	ROULEMENT
55	REC93210-54534	93210-54534	TÓRICA	O-RING	O-RING	JOINT TORIQUE
56	REC61A-45331-00-94	61A-45331-00-94	DIÁBOLO	GEAR HOUSING	DIAVOLO	DIABOLO
57	REC93101-28M16	93101-28M16	RETÉN DE ACEITE	OIL SEAL	PARAOLIO	JOINT SPI
58	REC6E5-45344-00	6E5-45344-00	CUBIERTA SELLO DE ACEITE	RETAINER	COPERCHIO PARAOLIO	RETENUE
59	PAGB/T97.1-8	92995-08600	ARANDELA	WASHER	RONDELLA	RONDELLE
60	PAGB/T5783-M8X25	97095-08025	PERNO	STUD	BULLONE	BOULON
61	REC61A-45376-00-94	61A-45376-00	GUÍA SELLO DE GOMA	GUIDE	GUIDE	GUIDE
62	REC6E5-44315-A0	6E5-44315-A0	JUNTA	GASKET	GUARNIZIONE	JOINT
63	REC6G5-44323-00	6G5-44323-00	TAPA BOMBA	OUTER PLATE	COPERCHIO POMPA	PLAQUE DE POMPE À EAU
64	REC6E5-44352-01	6E5-44352-01	TURBINA	IMPELLER	GIRANTE	TURBINE
65	REC61A-44322-02	61A-44322-02	TAPA, BOMBA AGUA	COVER, INNER WATER PUMP	COPERCHIO, POMPE ACQUA	INSERT DE POMPE À EAU
66	REC90201-22M01	90201-22M01	ARANDELA	WASHER	RONDELLA	RONDELLE
67	REC90206-22M19	90206-22M19	ARANDELA ONDULADA	WAVE WASHER	RONDELLA ONDULATA	RONDELLE
68	REC61A-45538-00	61A-45538-00	ESPACIADOR	SPACER	SPESSORE	ENTRETOISE
69	REC61A-45527-00	61A-45527-00	CASQUILLO CUERPO BOMBA	COLLAR	BOCCOLA CORPO POMPA	BAGUE POMPE À EAU
70	REC93210-86M38	93210-86M38	TÓRICA	O-RING	O-RING	JOINT TORIQUE
71	REC93210-37160	93210-37160	TÓRICA	O-RING	O-RING	JOINT TORIQUE
72	REC93606-12019	93606-12019	PASADOR	PIN	SPINOTTO	PIN
73	REC61A-44311-00	61A-44311-01	CUERPO BOMBA AGUA	HOUSING, WATER PUMP	CORPO POMPA	CORPS DE POMPE À EAU
74	REC6E5-44365-00	6E5-44365-00	GOMA DEL SELLO DE AGUA	DAMPER WATER TUBE	GUARNIZIONE	BAGUE DE TUBE D'EAU
75	REC6E5-44312-00	6E5-44312-00	CUBIERTA CAJA DE BOMBA DE AGUA	WATER PUMP COVER	COPERCHIO POMPA ACQUA	BAGUE DE POMPE À EAU
76	REC90119-08M14	90119-08M14	TORNILLO CON ARANDELA	SCREW WITH WASHER	VITE CON RONDELLA	VIS AVEC RONDELLE
77	REC6E5-44366-00	6E5-44366-00	GOMA DEL SELLO DE AGUA	DAMPER WATER TUBE	GUARNIZIONE	BAGUE DE TUBE D'EAU
78	REC6E5-44365-00	6E5-44365-00	GOMA TUBO AGUA	DAMPER WATER TUBE	GOMMA TUBO ACQUA	BAGUE DE TUBE D'EAU

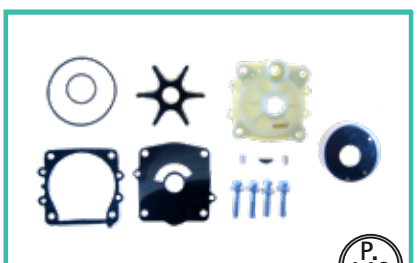

P. 146

REF	OEM
REC61A-W0078-A1	61A-W0078-A3



P. 147

REF	OEM	
REC69J-W0001-20-00	69J-W0001-20	2002-03

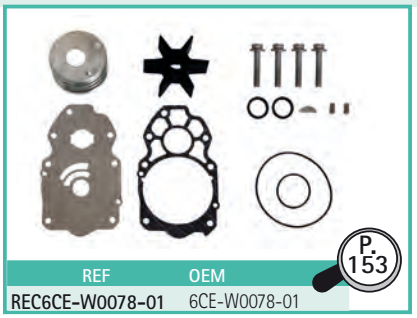

REF	OEM
REC6CE-W0078-01	6CE-W0078-01

P. 153



REF
REC80W90U3
REC80W90U6
RECGREU1
RECGREU12

P. 43

	REF	OEM				
1	REC90340-08002	90304-08002	TORNILLO DRENAJE	BOLT, DISCHARGING OIL	VITE DRENAGGIO	BOUCHON DE VIDANGE
2	REC90430-08020	90430-08020	JUNTA	GASKET	GUARNIZIONE	JOINT
3	PAGB/T6182-M5	90185-05002	TUERCA	LOCK NUT	DADO	ÉCROU
4	REC688-45341-00	688-45341-10	TORNILLO DRENAJE	BOLT, DISCHARGING OIL	VITE DRENAGGIO	BOUCHON DE VIDANGE
5	CM61A-45371-00A	61A-45371-00	ÁNODO	ANODE	ANODO	ANODE
6	REC93311-83280	93311-83280	COJINETE	BEARING	CUSCINETTO	ROULEMENT
7	REC90201-16M00	90201-16M00	ARANDELA	WASHER	RONDELLA	RONDELLE
8	REC90170-16M19	90170-16M19	TUERCA	LOCK NUT	DADO	ÉCROU
9	REC99001-08600-00	99001-08600	ARANDELA	WASHER	RONDELLA	RONDELLE
10	PAJASOF404-19-033	93210-33M49	TÓRICA	O-RING	O-RING	JOINT TORIQUE
11	REC65N-45321-00	65N-45321-00	TAPA SELECTOR	PLATE	COPERCHIO SELETTORE	COUVERCLE DU SELECTEUR
12	REC93106-09014	93106-09014	RETÉN DE ACEITE	OIL SEAL	PARAOLIO	JOINT SPI
13	REC663-45376-00	663-45376-00	GUÍA DE SELLO DE GOMA	GUIDE RUB. SEAL	GUIDA PARAOLIO	GUIDE
14	REC90280-04002	90280-04002	CUÑA	KEY WOODRUFF	CHIAVETTA	CLAVETTE
15	REC93210-65752-00	93210-64488	TÓRICA	O-RING	O-RING	JOINT TORIQUE
16	PAGB/T97.1-8	92995-08600	ARANDELA	WASHER	RONDELLA	RONDELLE
17	PAF4-04000001	97095-08020	PERNO	STUD	BULOONE	BOULON
18	REC93101-28M16	93101-28M16	RETÉN DE ACEITE	OIL SEAL	PARAOLIO	JOINT SPI
19	REC6D0-44367-00	6D0-44367-00	GOMA DEL SELLO DE AGUA	DAMPER, WATER SEAL	GOMMA TUBO ACQUA	MANCHON TUBE D'EAU
20	REC6D0-44362-01	6D0-44362-01	TUBO DE AGUA	WATER TUBE	TUBO ACQUA	DURITE D'EAU
21	PAT85-00000012	90105-10M00	TORNILLO	BOLT	VITE	VIS
22	REC6CE-44315-00	6CE-44315-00	JUNTA	GASKET	GUARNIZIONE	JOINT
23	REC6CE-44323-01	6CE-44323-01	TAPA BOMBA	OUTER PLATE, CARTRIDGE	COPERCHIO POMPA ACQUA	PLAQUE DE POMPE À EAU
24	REC6CE-44352-00	6CE-44352-01	TURBINA	IMPELLER	GIRANTE	TURBINE
25	REC6AW-44322-00	6AW-44322-00	TAPA, BOMBA AGUA	COVER, INNER WATER PUMP	COPERCHIO, POMPE ACQUA	INSERT DE POMPE À EAU
26	REC93210-94003	93210-94003	TÓRICA	O-RING	O-RING	JOINT TORIQUE
27	REC93210-37160	93210-37160	TÓRICA	O-RING	O-RING	JOINT TORIQUE
28	REC93606-12019	93606-12019	PASADOR	PIN	SPINOTTO	PIN
29	REC6CE-44311-01	6CE-44311-01	CUERPO BOMBA AGUA	HOUSING, WATER PUMP	CORPO POMPA	CORPS DE POMPE À EAU
30	REC90119-08M14	90119-08M14	TORNILLO CON ARANDELA	SCREW WITH WASHER	VITE CON RONDELLA	VIS AVEC RONDELLE
31	REC6AW-44365-00	6AW-44365-00	GOMA DEL SELLO DE AGUA	DAMPER, WATER SEAL	ANELLO TUBO ACQUA	RETENUE TUBE D'EAU
32	REC6AW-44312-00	6AW-44312-00	CUBIERTA CAJA DE BOMBA DE AGUA	WATER PUMP COVER	COPERCHIO POMPA ACQUA	BAGUE DE POMPE À EAU
33	REC93104-22M07	93104-22M07	RETÉN DE ACEITE	OIL SEAL	PARAOLIO	ROULEMENT
34	REC93311-85894	93311-85894	COJINETE	BEARING	CUSCINETTO	ROULEMENT
35	REC93340-67011	93340-67011	COJINETE	BEARING	CUSCINETTO	ROULEMENT
36	REC93501-04011	93501-04011	ESFERA	BALLE	SFERA	BILLE
37	REC90183-02M03	90183-02M03	TUERCA DE RESORTE	SPRING NUT	DADO MOLLA	RONDELLE FREIN
38	REC6H1-45668-00	6H1-45668-00	EJE	SHAFT	ASSE	ARBRE
39	REC61A-45635-00	61A-45635-00	ÉMBOLO DE CAMBIO	SHIFT PLUNGER	GUARNIZIONE	SHIFT
40	REC90501-10M77	90501-10M77	RESORTE DE COMPRESIÓN	SPRING	MOLLA	RESSORT
41	REC90201-02M00	90201-02M00	ARANDELA PLANA	WASHER	RONDELLA	RONDELLE
42	REC90250-08M07	90250-08M07	PASADOR	PIN	SPINOTTO	PIN
43	REC6E5-45633-01	6E5-45633-01	ANILLO DEL PASADOR	ANULAR SPRING, CLUTCH	ANELLO	RESSORT
44	REC6CB-45611-00	6CB-45611-00	EJE	SHAFT	ASSE	ARBRE D'HELICE
45	REC93306-209U0	93306-209U0	COJINETE	BEARING	CUSCINETTO	ROULEMENT
46	REC93332-000A5	93332-000A5	COJINETE	BEARING	CUSCINETTO	ROULEMENT
47	REC93315-43061	93315-43061	COJINETE	BEARING	CUSCINETTO	ROULEMENT
48	REC93101-30002	93101-300002	RETÉN DE ACEITE	OIL SEAL	PARAOLIO	JOINT SPI
49	REC688-45997-00	688-45997-01	ESPACIADOR	SPACER	SPESSORE	ENTRETOISE
50	REC92990-18200	92990-18200	ARANDELA PLANA	WASHER	RONDELLA	RONDELLE
51	REC90171-18M04	90171-18M04	TUERCA	LOCK NUT	DADO	ÉCROU
52	REC91490-40030	91490-40030	PASADOR	PIN	SPINOTTO	CLAVETTE

4T STROKES F250A/B/T

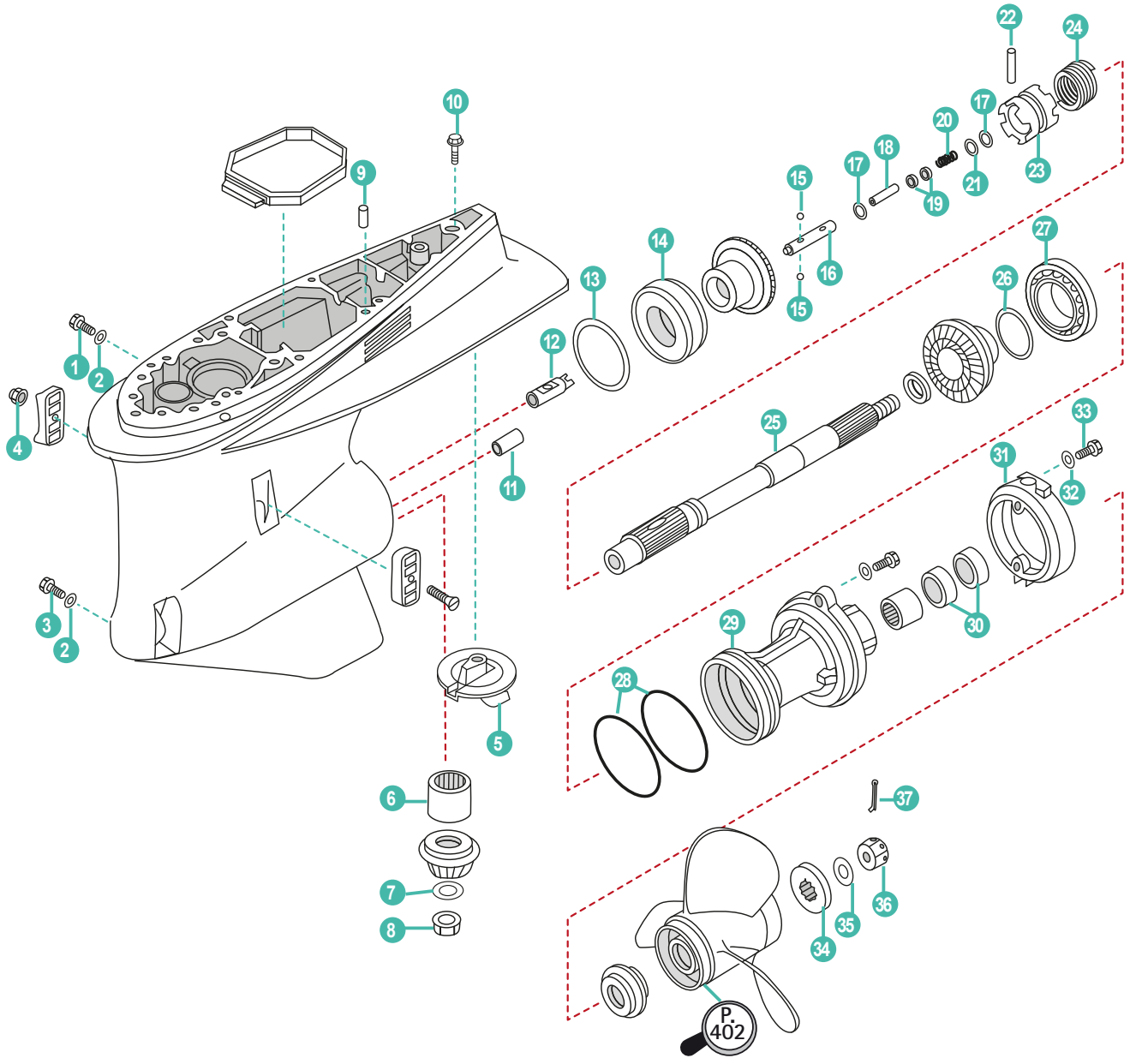

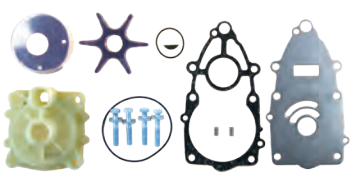

REF	OEM
REC6P2-W0078-00	61P2-W0078-00

P. 153



REF
REC80W90U3
REC80W90U6
RECGREU1
RECGREU12

P. 43

	REF	OEM				
1	REC90340-08002	90304-08002	TORNILLO DRENAJE	BOLT, DISCHARGING OIL	VITE DRENAGGIO	VIS DE VIDANGE
2	REC90430-08020	90430-08020	JUNTA	GASKET	GUARNIZIONE	JOINT
3	REC688-45341-00	688-45341-10	TORNILLO DRENAJE	BOLT, DISCHARGING OIL	VITE DRENAGGIO	VIS DE VIDANGE
4	PAGB/T6182-M5	90185-05002	TUERCA	LOCK NUT	DADO	ÉCROU
5	CM61A-45371-00A	61A-45371-00	ÁNODO	ANODE	ANODO	ANODE
6	REC93311-83280	93311-83280	COJINETE	BEARING	CUSCINETTO	PALIER
7	REC90201-16M00	90201-16M00	ARANDELA	WASHER	RONDELLA	RONDELLE
8	REC90170-16M19	90170-16M19	TUERCA	LOCK NUT	DADO	ÉCROU
9	REC93608-12M05	93608-12M05	PASADOR	PIN	SPINOTTO	LEVIER
10	PAT85-00000012	90105-10M00	TORNILLO	SCREW	VITE	VIS
11	REC99590-10114	99590-10114	PASADOR	PIN	SPINOTTO	LEVIER
12	REC61A-45641-02	61A-45641-02	CAMBIO	SHIFTER	CAMBIO	SHIFTER
13	REC61A-45567-00/60-0	61A-45567-00	KIT GRUESOS (0.10-0.50 mm)	KIT SHIM (0.10-0.50 mm)	KIT SPESSORE (0.10-0.50 mm)	KIT CALES (0.10 - 0.50 mm)
14	REC93332-000W1	93332-000W1	COJINETE	BEARING	CUSCINETTO	ROULEMENT
15	REC93501-04011	93501-04011	ESFERA	BALL	SFERA	BILLE
16	REC61A-45634-01	61A-45634-01	DESLIZADOR CAMBIO	SHIFT SLIDE	SPINOTTO SCORREVOLE	SHIFT
17	REC90183-02M03	90183-02M03	TUERCA DE RESORTE	SPRING NUT	DADO MOLLA	RONDELLE FREIN
18	REC6H1-45668-00	6H1-45668-00	EJE	SHAFT	ASSE	ARBRE
19	REC61A-45635-00	61A-45635-00	DESLIZADOR CAMBIO	SHIFT SLIDE	SPINOTTO	SHIFT
20	REC90501-10M77	90501-10M77	RESORTE DE COMPRESIÓN	SPRING	MOLLA	RESSORT
21	REC90201-02M00	90201-02M00	ARANDELA PLANA	WASHER	RONDELLA	RONDELLE
22	REC61A-45632-00	61A-45632-00	PASADOR	PIN	SPINOTTO	PIN
23	REC69J-45631-00	69J-45631-00	EMBRAGUE DE GARRA	CLUTH	SELETTORE	CRABOT
24	REC61A-45633-00	61A-45633-00	ANILLO DEL PASADOR	ANNULAR SPRING, CLUTCH	ANELLO	RESSORT
25	REC69J-45611-00	69J-45611-00	EJE	SHAFT	ASSE	ARBRE
	REC69K-45611-00	69K-45611-00	EJE CONTRARROTACIÓN	CR SHAFT	ASSE CR	ARBRE D'HELICE CR
26	REC61A-45577-00/60-0	61A-45577-00	KIT GRUESOS (0.10-0.50 mm)	KIT SHIM (0.10-0.50 mm)	KIT SPESSORE (0.10-0.50 mm)	KIT CALES (0.10 -0.50 mm)
27	REC93306-210U0	93306-210U0	COJINETE	BEARING	CUSCINETTO	ROULEMENT
28	REC93211-04384	93211-04384	TÓRICA	O-RING	O-RING	JOINT TORIQUE
29	REC6D0-45332-00-CA	6D0-45332-00-CA	DIÁBOLO	GEAR HOUSING	DIAVOLO	DIABOLO
30	REC93101-30002	93101-300002	RETÉN DE ACEITE	OIL SEAL	PARAOLIO	JOINT SPI
31	REC6D0-45361-00-8D	6D0-45361-00-8D	FUNDA INFERIOR	CAO LOWER CASING	COVER INFERIORE	COUVERCLE INFERIEUR
32	PAF4-04000001	97095-08020	PERNO	BOLT	BULONE	BOULON
33	PAGB/T97.1-8	92995-08600	ARANDELA	WASHER	RONDELLA	RONDELLE
34	REC688-45997-00	688-45997-01	ESPACIADOR	SPACER	SPESSORE	CALES
35	REC92990-18200	92990-18200	ARANDELA PLANA	WASHER	RONDELLA	RONDELLE
36	REC90171-18M04	90171-18M04	TUERCA	LOCK NUT	DADO	ÉCROU
37	REC91490-40030	91490-40030	PASADOR	PIN	SPINOTTO	CLAVETTE

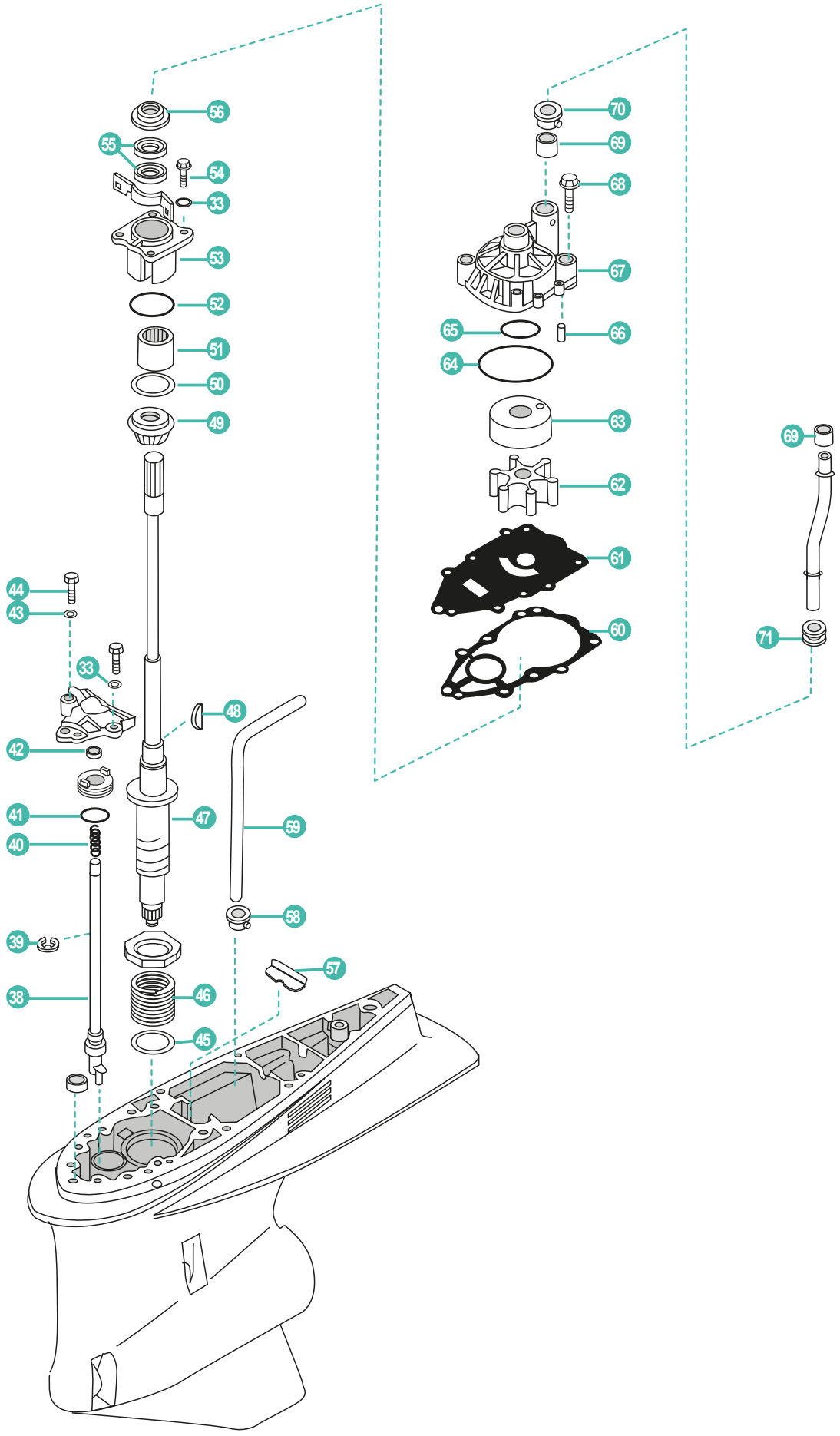
56
55
54
33
53
52
51
50
49
44
43
33
48
42
41
47
59
40
58
39
57
38
46
45
70
69
68
67
65
66
64
63
62
61
60
69
71

	REF	OEM				
38	REC6P2-44150-00	6P2-44150-00	VARILLA SELECTOR	SHIFT CAM ASSY	ASTA SELETTORE	TIGE DE SELECTEUR
39	REC99001-08600-00	99001-08600	CLIP	CLIP	RONDELLA	CLIP
40	REC90501-11M10-00	90501-11M10	RESORTE DE COMPRESIÓN	SPRING	MOLLA	RESSORT
41	PAJASOF404-19-033	93210-33M49	TÓRICA	O-RING	O-RING	JOINT TORIQUE
42	REC93106-09014	93106-09014	RETÉN DE ACEITE	OIL SEAL	PARAOLIO	ROULEMENT
43	PAGB/T97.1-6	92995-06600	ARANDELA	WASHER	RONDELLA	RONDELLE
44	PAGB/T5783-M6X16	97095-06016	PERNO	BOLT	BULLONE	BOULON
45	REC90201-42014	90201-42014	ARANDELA PLANA	WASHER	RONDELLA	RONDELLE
46	REC90501-450A2	90501-450A2	RESORTE	SPRING	MOLLA	RESSORT
47	REC6P2-45501-11	6P2-45501-10	EJE TRANSMISION **U** (30.3")	DRIVE SHSFT **U** (30.3")	ASSE TRASMISSIONE **U** (30.3")	ARBRE DE TRANSMISSION **U** (30,3")
	REC6P2-45501-01	6P2-45501-00	EJE TRANSMISION **X** (25.3")	DRIVE SHSFT **X** (25.3")	ASSE TRASMISSIONE **X** (25.3")	ARBRE DE TRANSMISSION **X** (25.3")
48	REC90280-04M05	90280-04M05	CUÑA	KEY WOODRUFF	CHIAVETTA	CLAVETTE
49	REC93341-93020	93341-930U9	COJINETE	BEARING	CUSCINETTO	ROULEMENT
50	REC61A-45587-00/60-0	61A-45587-00	KIT GRUESOS (0.10-0.50 mm)	KIT SHIM (0.10-0.50 mm)	KIT SPESSORE (0.10-0.50 mm)	KIT CALES (0.10 - 0.50 mm)
51	REC93317-330U2	93317-330U2	COJINETE	BEARING	CUSCINETTO	ROULEMENT
52	REC93210-54534	93210-54534	TÓRICA	O-RING	O-RING	JOINT TORIQUE
53	REC6P2-45331-00-9S	6P2-45331-00-9S	CAJA DE COJINETE	HOUSING, BEARING	SCATOLA CUSCINETTO	PALIER DE ROULEMENT
54	PAGB/T5783-M8X25	97095-08025	PERNO	BOLT	BULLONE	BOULON
55	REC93101-28M16	93101-28M16	RETÉN DE ACEITE	OIL SEAL	PARAOLIO	JOINT SPI
56	REC6E5-45344-00	6E5-45344-00	TAPA RETEN	RETAINER	COPERCHIO PARAOLIO	RETENUE
57	REC61A-45376-00-94	61A-45376-00	GUÍA SELLO DE GOMA	GUIDE	GUIDA	GUIDE
58	REC6D0-44367-00	6D0-44367-00	GOMA TUBO AGUA	DAMPER, WATER SEAL	GOMMA TUBO ACQUA	MANCHON TUBE D'EAU
59	REC6D0-44362-01	6D0-44362-01	TUBO DE AGUA	WATER TUBE	TUBO ACQUA	TUBE D'EAU
60	REC60X-44315-A0	60X-44315-A0	JUNTA	GASKET	GUARNIZIONE	JOINT
61	REC6P2-44323-00	6P2-44323-00	PLACA EXTERIOR DEL CARTUCHO	OUTER PLATE	PLACCA ESTERNA	PLAQUE DE POMPE À EAU
62	REC6E5-44352-01	6E5-44352-01	TURBINA	IMPELLER	GIRANTE	TURBINE
63	REC61A-44322-02	61A-44322-02	TAPA, BOMBA AGUA	COVER, INNER WATER PUMP	COPERCHIO, POMPE ACQUA	INSERT DE POMPE À EAU
64	REC93210-86M38	93210-86M38	TÓRICA	O-RING	O-RING	JOINT TORIQUE
65	REC93210-37160	93210-37160	TÓRICA	O-RING	O-RING	JOINT TORIQUE
66	REC93606-12019	93606-12019	PASADOR	PIN	SPINOTTO	PIN
67	REC61A-44311-00	61A-44311-01	CUERPO BOMBA AGUA	HOUSING, WATER PUMP	CORPO POMPA	CORPS DE POMPE À EAU
68	REC90119-08M14	90119-08M14	TORNILLO CON ARANDELA	SCREW WITH WASHER	VITE CON RONDELLA	VIS AVEC RONDELLE
69	REC6E5-44365-00	6E5-44365-00	GOMA DEL SELLO DE AGUA	DAMPER, WATER SEAL	ANELLO TUBO ACQUA	RETENUE TUBE D'EAU
70	REC6E5-44312-00	6E5-44312-00	CUBIERTA CAJA DE BOMBA DE AGUA	WATER PUMP COVER	COPERCHIO POMPA ACQUA	GUIDE DE POMPE À EAU
71	REC6E5-44366-00	6E5-44366-00	GOMA DEL SELLO DE AGUA	DAMPER, WATER SEAL	ANELLO TUBO ACQUA	RETENUE TUBE D'EAU
	REC422-B25F	6P2-45300-20-8D 6P2-45300-21-8D	CONJUNTO INFERIOR	COMPLETE GEARCASE	PIEDE COMPLETO	EMBASE COMPLETE
	REC429-B25F	6P3-45300-40-8D 6P3-45300-41-8D	CONJUNTO INFERIOR CONTRA ROTACIÓN	COMPLETE GEARCASE COUNTER ROTATION	PIEDE COMPLETO CONTRO ROTANTE	EMBASE COMPLETE CONTRE ROTATION

4T STROKES F300A • F350A/T/C

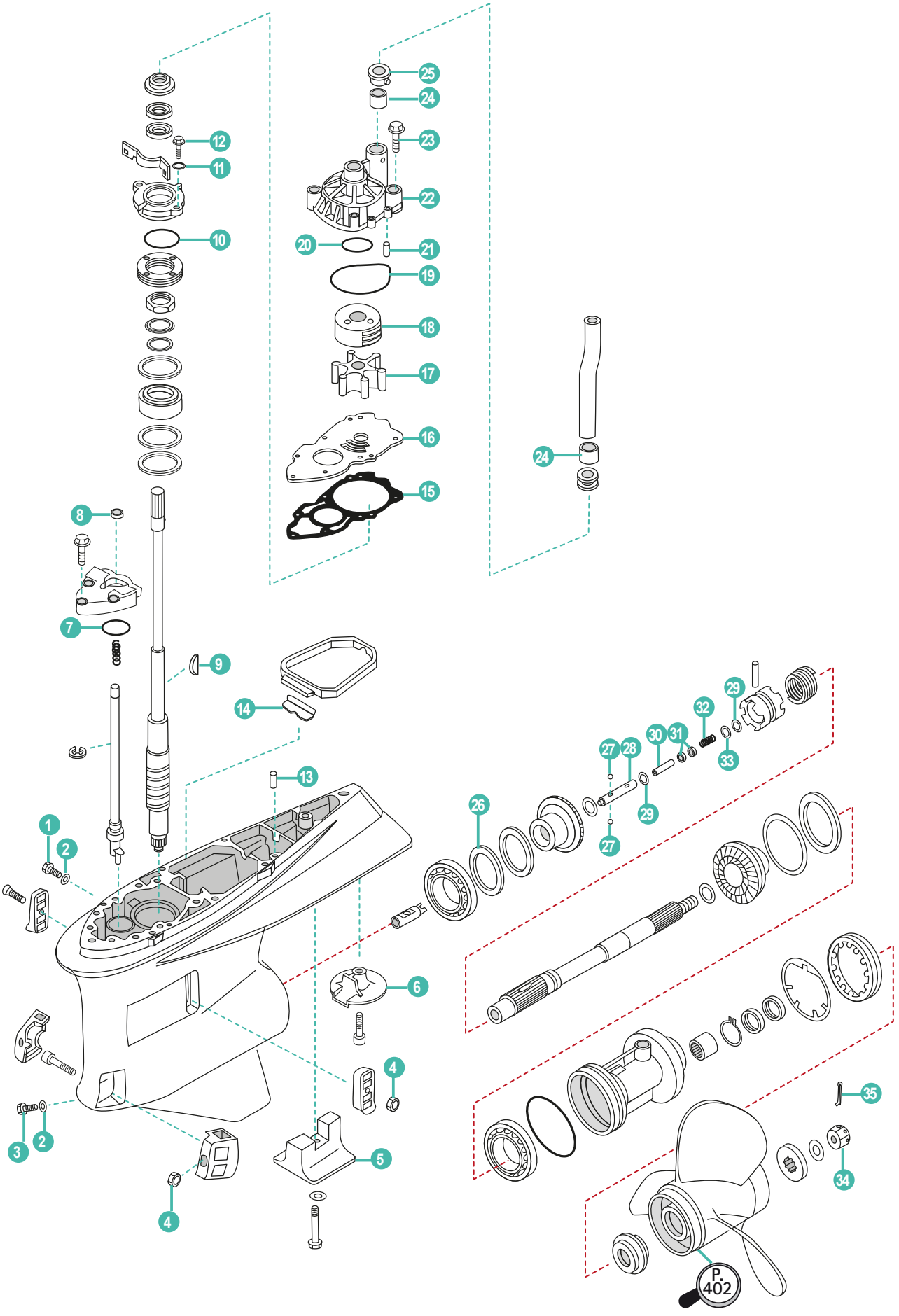

	REF	OEM				
1	REC90340-08002	90304-08002	TORNILLO DRENAJE	BOLT, DISCHARGING OIL	VITE DRENAGGIO	BOUCHON DE VIDANGE
2	REC90430-08020	90430-08020	JUNTA	GASKET	GUARNIZIONE	JOINT
3	REC688-45341-00	688-45341-10	TORNILLO DRENAJE	BOLT, DISCHARGING OIL	VITE DRENAGGIO	BOUCHON DE VIDANGE
4	PAGB/T6182-M5	90185-05002	TUERCA	LOCK NUT	DADO	ÉCROU
5	CM6AW-45373-00A	6AW-45373-00	ÁNODO	ANODE	ANODO	ANODE
6	CM6AW-45619-00A	6AW-45619-00	ÁNODO	ANODE	ANODO	ANODE
7	REC93210-48214	93210-48214	TÓRICA	O-RING	O-RING	JOINT TORIQUE
8	REC93101-12M70	93101-12M70	RETÉN DE ACEITE	OIL SEAL	PARAOLIO	JOINT SPI
9	REC6AW-44336-00	6AW-44336-00	CUÑA	KEY WOODRUFF	CHIAVETTA	CLAVETTE
10	REC93210-69MG6	93210-69MG6	TÓRICA	O-RING	O-RING	JOINT TORIQUE
11	PAGB/T97.1-8	92995-08600	ARANDELA	WASHER	RONDELLA	RONDELLE
12	PAF4-04000001	97095-08020	PERNO	BOLT	BULLONE	BOULON
13	REC93608-12M05	93608-12M05	PASADOR	PIN	SPINOTTO	PIN
14	REC61A-45376-00-94	61A-45376-00-94	GUÍA DE SELLO DE GOMA	GUIDE	GUIDE	GUIDE
15	REC6AW-44315-00	6AW-44315-00	JUNTA	GASKET	GUARNIZIONE	JOINT
16	REC6AW-44323-00	6AW-44323-00	TAPA BOMBA	OUTER PLATE, CARTRIDGE	COPERCHIO POMPA D'ACQUA	PLAQUE DE POMPE À EAU
17	REC6AW-44352-00	6AW-44352-00	TURBINA	IMPELLER	GIRANTE	TURBINE
18	REC6AW-44322-00	6AW-44322-00	TAPA, BOMBA AGUA	COVER, INNER WATER PUMP	COPERCHIO, POMPE D'EAU	INSERT DE POMPE À EAU
19	REC93210-94003	93210-94003	TÓRICA	O-RING	O-RING	JOINT TORIQUE
20	REC93210-37160	93210-37160	TÓRICA	O-RING	O-RING	JOINT TORIQUE
21	REC93606-12019	93606-12019	PASADOR	PIN	SPINOTTO	PIN
22	REC6AW-44311-01	6AW-44311-00	CUERPO BOMBA AGUA	HOUSING, WATER PUMP	CORPO POMPA	CORPS DE POMPE À EAU
23	REC90119-08M14	90119-08M14	TORNILLO CON ARANDELA	SCREW WITH WASHER	VITE CON RONDELLA	VIS AVEC RONDELLE
24	REC6AW-44365-00	6AW-44365-00	GOMA DEL SELLO DE AGUA	DAMPER, WATER SEAL	ANELLO TUBO ACQUA	RETENUE TUBE D'EAU
25	REC6AW-44312-00	6AW-44312-00	CUBIERTA CAJA DE BOMBA DE AGUA	WATER PUMP COVER	COPERCHIO POMPA ACQUA	BAGUE DE POMPE À EAU
26	REC93340-67011	93340-67011	COJINETE	BEARING	CUSCINETTO	ROULEMENT
27	REC93501-04011	93501-04011	ESFERA	BALL	SFERA	BILLE
28	REC61A-45634-01	61A-45634-01	DESLIZADOR DE CAMBIO	SHIFT SLIDE	SCORREVOLE DEL CAMBIO	SHIFT
29	REC90183-02M03	90183-02M03	TUERCA DE RESORTE	SPRING NUT	DADO MOLLA	RONDELLE FREIN
30	REC6H1-45668-00	6H1-45668-00	EJE	SHAFT	ASSE	ARBRE
31	REC61A-45635-00	61A-45635-00	ÉMBOLO DE CAMBIO	SHIFT PLUNGER	GOMMINO	SHIFT
32	REC90501-10M77	90501-10M77	RESORTE DE COMPRESIÓN	SPRING	MOLLA	RESSORT
33	REC90201-02M00	90201-02M00	ARANDELA PLANA	WASHER	RONDELLA	RONDELLE
34	REC90171-18M04	90171-18M04	TUERCA	LOCK NUT	DADO	ÉCROU
35	REC91490-40030	91490-40030	PASADOR	PIN	SPINOTTO	CLAVETTE

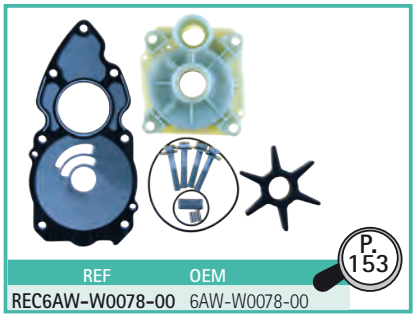

P. 153

REF	OEM
REC6AW-W0078-00	6AW-W0078-00



P. 43

REF
REC80W90U3
REC80W90U6
RECGREU1
RECGREU12

2T STROKES 2HP • 2B • 2MSH • 2CMH

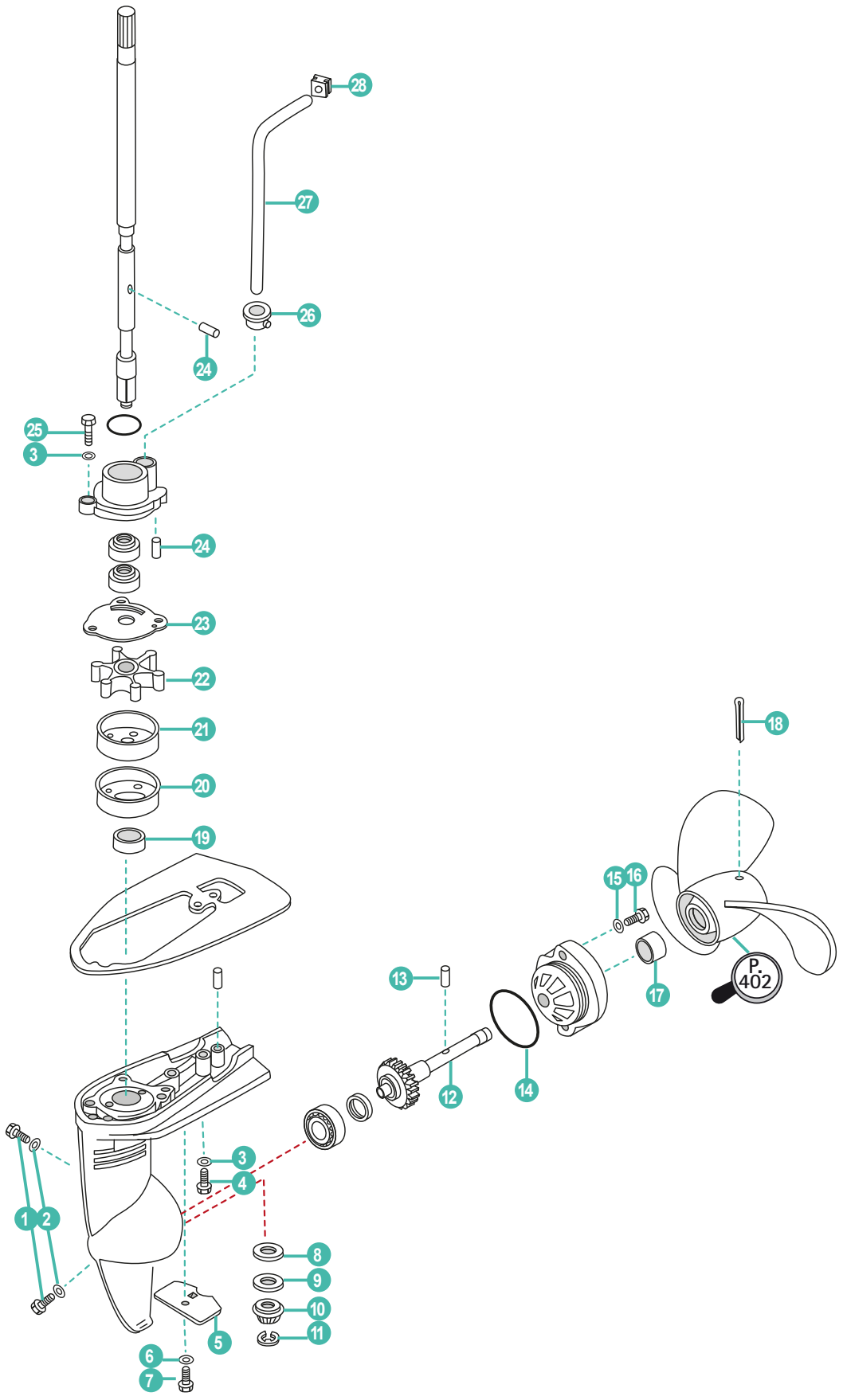

YAMAHA

RECAMBIOS MARINOS

	REF	OEM				
1	REC90340-08002	90340-08M04	TORNILLO DRENAJE	BOLT, DISCHARGING OIL	VITE DRENAGGIO	BOUCHON DE VIDANGE
2	REC90430-08020	90430-08020	JUNTA	GASKET	GUARNIZIONE	JOINT
3	PAGB/T97.1-8	92995-08600	ARANDELA	WASHER	RONDELLA	RONDELLE
4	PAGB/T5783-M6X30	97095-06030	TORNILLO	BOLT	VITE	VIS
5	CM6L5-45251-02	6L5-45251-02	ÁNODO ZINC	ANODE	ANODO ZINCO	ANODE
6	PAGB/T861.1-87	92990-06300	ARANDELA	WASHER	RONDELLA	RONDELLE
7	PAGB/T5783-M6X35	95895-06012	TORNILLO	BOLT, FLANGE	VITE	VIS
8	PAF2.6-03000017	646-45534-00-03	GRUESO	SHIM	SPESSORE	CALE
9	PAF4-03000006	90201-11M49	ARANDELA	WASHER	RONDELLA	RONDELLE
10	REC646-45551-00	646-45551-00	PIÑÓN ATAQUE	INITIATIVE GEAR	MARCIA INIZIATIVA	PIGNON D'ATTAQUE
11	PAGB/T896-86	93430-06005	CLIP	CIRCLIP	CLIP	CLIP
12	REC646-45560-00	646-45560-00	ENGRANAJE CON EJE	GEAR WITH SHAFT	IGRANAGGIO CON ASSE	PIGNON
13	REC90250-03M10	90250-03M10	PASADOR SEGURIDAD	PIN	SPINOTTO	LEVIER
14	REC93210-42101	93210-42101	ARO TÓRICA	O-RING	O-RING	JOINT TORIQUE
15	PAGB/T97.1-6	92990-06600	ARANDELA	WASHER	RONDELLA	RONDELLE
16	PAGB/T5783-M6X16	97090-06014	TORNILLO	BOLT	VITE	VIS
17	REC93103-10052	93103-10052	RETÉN	OIL SEAL	PARAOLIO	JOINT SPI
18	REC91490-30040	91490-30040	PASADOR ALETAS	PIN	SPINOTTO	PIN
19	REC93103-11051	93103-11051	RETÉN	OIL SEAL	PARAOLIO	JOINT D'HUILE
20	REC6A1-44325-00	6A1-44325-00P	CUERPO INF. BOMBA	PROTECTOR	CORPO INF. POMPA	BASE DE POMPE À EAU
21	REC646-44322-00	646-44322-00	CASQUILLO INOX. BOMBA	INSERT	GHIERA INOX. POMPA	INSERT DE POMPE À EAU
22	REC646-44352-01	646-44352-01	TURBINA	IMPELLER	GIRANTE	TURBINE
23	REC646-44322-00	646-44323-00	PLATO BOMBA AGUA	OUTER PLATE	PIASTRA POMPA ACQUA	PLAQUE DE POMPE À EAU
24	PAF2.6-03000013	93604-09068	PIN	PIN	SPINOTTO	PIN
25	PAGB/T5783-M5X16	97095-05016	TORNILLO	BOLT	VITE	VIS
26	REC646-44366-01	646-44366-01	RETÉN TUBO AGUA	SEAL WATER PIPE	ANELLO TUBO ACQUA	RETENUE TUBE D'EAU
27	REC6A1-44361-00	6A1-44361-00	TUBO AGUA	TUBE, WATER	TUBO ACQUA	TUBE D'EAU
28	REC646-44365-00	646-44365-00	RETÉN TUBO DE AGUA	I-SHAPED RUBBER BAND	ANELLO TUBO ACQUA	RETENUE TUBE D'EAU



REF	OEM
REC6A1-W0078-01	6A1-W0078-01

P. 150



REF	OEM
REC6A1-W0001-23	6A1-W0001-23

P. 144



REF
REC80W90U3
REC80W90U6
RECGREU1
RECGREU12

P. 43

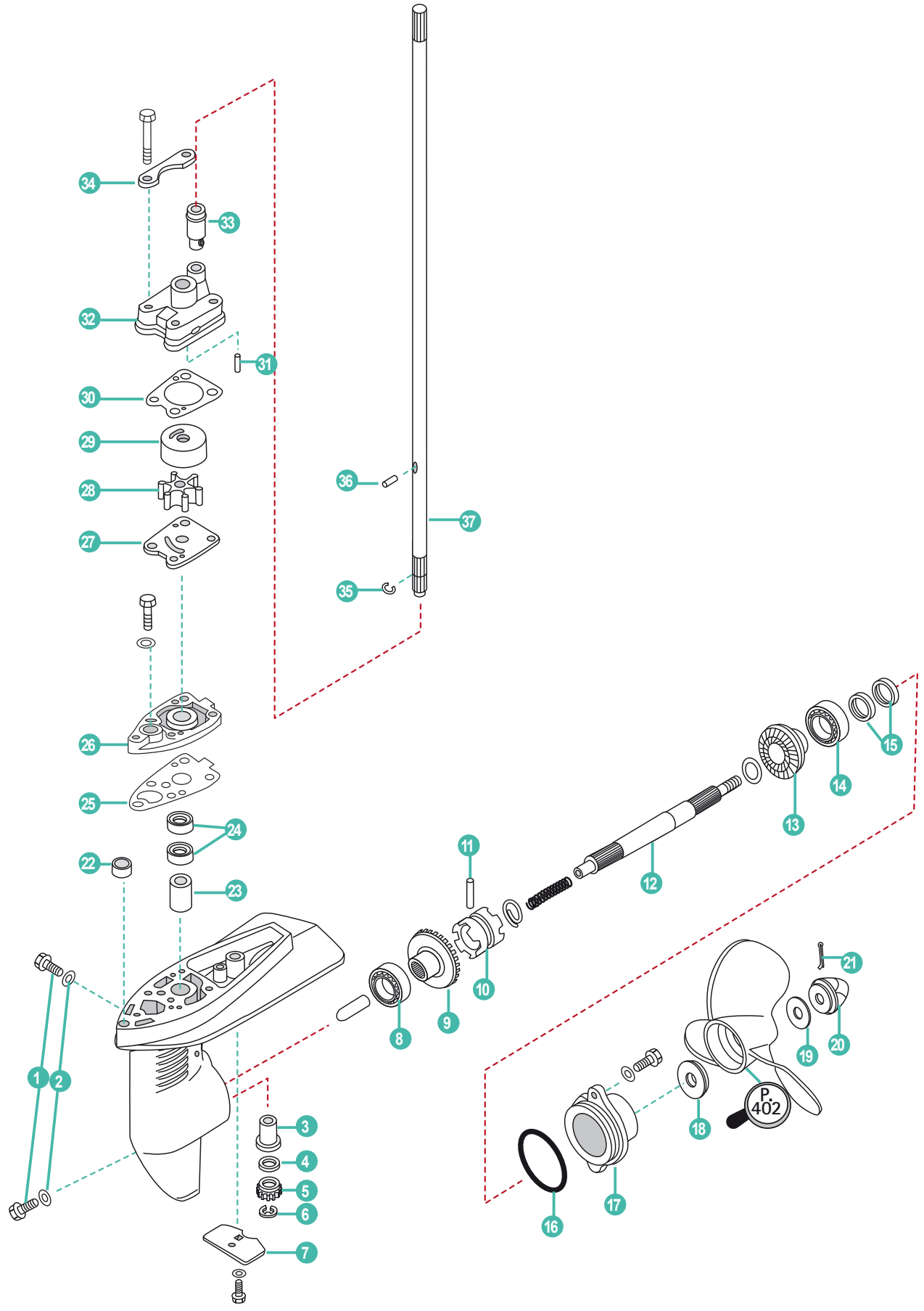
34
33
32
31
30
29
28
27
36
37
35
26
25
24
22
23
11
12
13
14
15
10
9
8
1
2
3
4
5
6
7
21
20
19
18
17
16
P. 402

	REF	OEM				
1	REC90340-08002	90340-08002	TAPÓN ACEITE	PLUG, OIL	TAPPO OLIO	BOUCHON REMPLISSAGE D'HUILE
2	REC90430-08020	90430-08020	JUNTA	GASKET	GUARNIZIONE	JOINT
3	REC6E0-45317-00	6E0-45317-09	CASQUILLO EJE	BUSHING	CAPPUCCIO ASSE	BAGUE D'ARBRE
4	PAF4-03000006	90204-11M49	ARANDELA	WASHER	RONDELLA	RONDELLE
5	REC6E0-45551-00	6E0-45551-00	PIÑÓN ATAQUE	INITIATIVE GEAR	MARCIA INIZIATIVA	PIGNON D'ATTAQUE
6	PAGB/T896-86	99001-06600	CIRCLIP	CIRCLIP	CIRCLIP	CIRCLIP
7	CM6L5-45251-02	6L5-45251-03	ÁNODO	ZINC ANODE	ANODO ZINCO	ANODE
8	PAGB/T276-6004C2	93306-004U0	RODAMIENTO	BEARING	CUSCINETTO	ROULEMENT
9	REC6E0-45560-00	6E0-45560-00	PIÑÓN MARCHA AVANTE	POSITIVE GEAR ASSY	PIGNONE MARCIA AVANTI	PIGNON DE MARCHE AVANT
10	REC6E0-45631-00	6E0-45631-00	DESPLAZABLE	CLUTCH, DOG	SCORREVOLE	CRABOT
11	REC90250-05046	90250-05046	PASADOR	PIN STRAIGHT	SPINOTTO	PIN
12	REC6E0-45611-01	6E0-45611-01	EJE HÉLICE	SHAFT, PROPELLER	ASSE ELICA	ARBRE D'HELICE
13	REC6E0-45570-00	6E0-45570-00	PIÑÓN MARCHA ATRÁS	REVERSE GEAR	PIGNONE MARCIA INDIETRO	PIGNON MARCHE ARRIÈRE
14	PAGB/T276-6004C2	93306-004U0	RODAMIENTO	BEARING	CUSCINETTO	ROULEMENT
15	REC93101-13M12	93101-13M12	RETÉN	OIL SEAL	PARAOLIO	JOINT SPI
16	REC93210-48214	93210-48214	ARO TÓRICO	O-RING	O-RING	JOINT TORIQUE
17	PAF4-03050001	6E0-45361-01-4D	TAPA CÁRTER	COVER, LOWER CASING	COPERCHIO CARTER	COUVERCLE INFERIEUR EMBASE
18	PAF4-03000025	6L5-45987-01	ESPACIADOR	SPACER	DISTANZIALE	ENTRETOISE
19	PAF4-03000026	90201-08M54	ARANDELA INOX.	WASHER, STAINLESS STEEL	RONDELLA INOX.	RONDELLE INOX
20	REC647-45616-02	6L5-45616-02	TUERCA	NUT, PROPELLER	DADO	ÉCROU
21	PAGB/T91-1.6X12	91490-25030	PASADOR ALETAS	PIN, COTTER	SPINOTTO	PIN
22	PAF4-00000001	90387-06M14	COLLAR	COLLAR	COLLARE	GUIDE CREUX
23	REC6E0-45316-00	6E0-45316-09	CASQUILLO EJE	BUSHING	GHIERA ASSE	BAGUE BRONZE
24	REC93101-10M14	93101-10M14	RETÉN	OIL SEAL	PARAOLIO	JOINT SPI
25	PAF4-03000011	6E0-45315-A0	JUNTA	PACKING	GUARNIZIONE	JOINT
26	PAF4-03000012	6E0-45321-01-5B	BASE BOMBA DE AGUA	BASE, WATER PUMP	BASE POMPA ACQUA	BASE DE POMPE À EAU
27	PAF4-03000015	6E0-44323-00	PLACA	OUTER PLATE	PIASTRA	PLAQUE
28	REC6E0-44352-00	6E0-44352-00	IMPULSOR	IMPELLER	GIRANTE	TURBINE
29	REC6E0-44322-02	6E0-44322-02	CASQUILLO INOX	CARTRIDGE INSERT	CAPPUCCIO	INSERT DE POMPE À EAU
30	PAF4-03000018	6E0-44315-A0	JUNTA BOMBA	GASKET	GUARNIZIONE POMPA	JOINT DE POMPE
31	PAF4-03000013	93604-18080	PIN	PIN, DOWEL	SPINOTTO	PIN
32	PAF4-03000019	6E0-44311-00	CUERPO BOMBA	HOUSING, WATER PUMP	CORPO POMPA	CORPS DE POMPE À EAU
33	PAF4-03000021	6E0-44366-00	RETÉN GOMA, BOMBA DE AGUA	RUBBER TUBE, WATER PUMP	TENUTA IN GOMMA, POMPA ACQUA	MANCHON CAOUTCHOUC DE POMPE À EAU
34	PAF4-03000020	6E0-44328-00	PLACA FIJACIÓN BOMBA DE AGUA	PLATE, WATER PUMP FIXED	PLACCA DI FISSAGGIO POMPA ACQUA	PLAQUE FIXATION DE POMPE À EAU
35	PAF4-03000005	90467-08M01	CLIP	CLIP	CLIP	CLIP
36	PAF4-03000016	93604-09066	PIN	PIN, DOWEL	SPINOTTO	PIN
37	REC6E0-45511-01	6E0-45511-01	EJE VERTICAL **S**	SHAFT, DRIVE **S**	ASSE VERTICALE **S**	ARBRE VERTICAL **S**
	REC6E0-45511-11	6E0-45511-11	EJE VERTICAL **L**	SHAFT, DRIVE **L**	ASSE VERTICALE **L**	ARBRE VERTICAL **L**

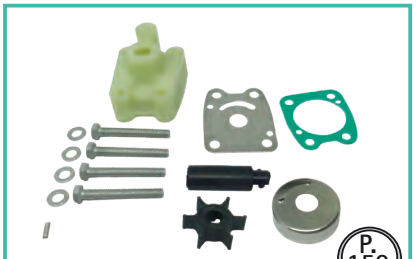

REF	OEM
REC6E0-W0078-A2	6E0-W0078-A2, -00, -01, -02

P. 150



REF	OEM
REC6E0-W0001-C1	6E0-W0001-C1

P. 144



REF
REC80W90U3
REC80W90U6
RECGREU1
RECGREU12

P. 43

2T STROKES 6HP/C/MSH/CMH/CWH/MBK'07/D/DMH/DWH 8HP/C/MSH/MH/CMH/CWH

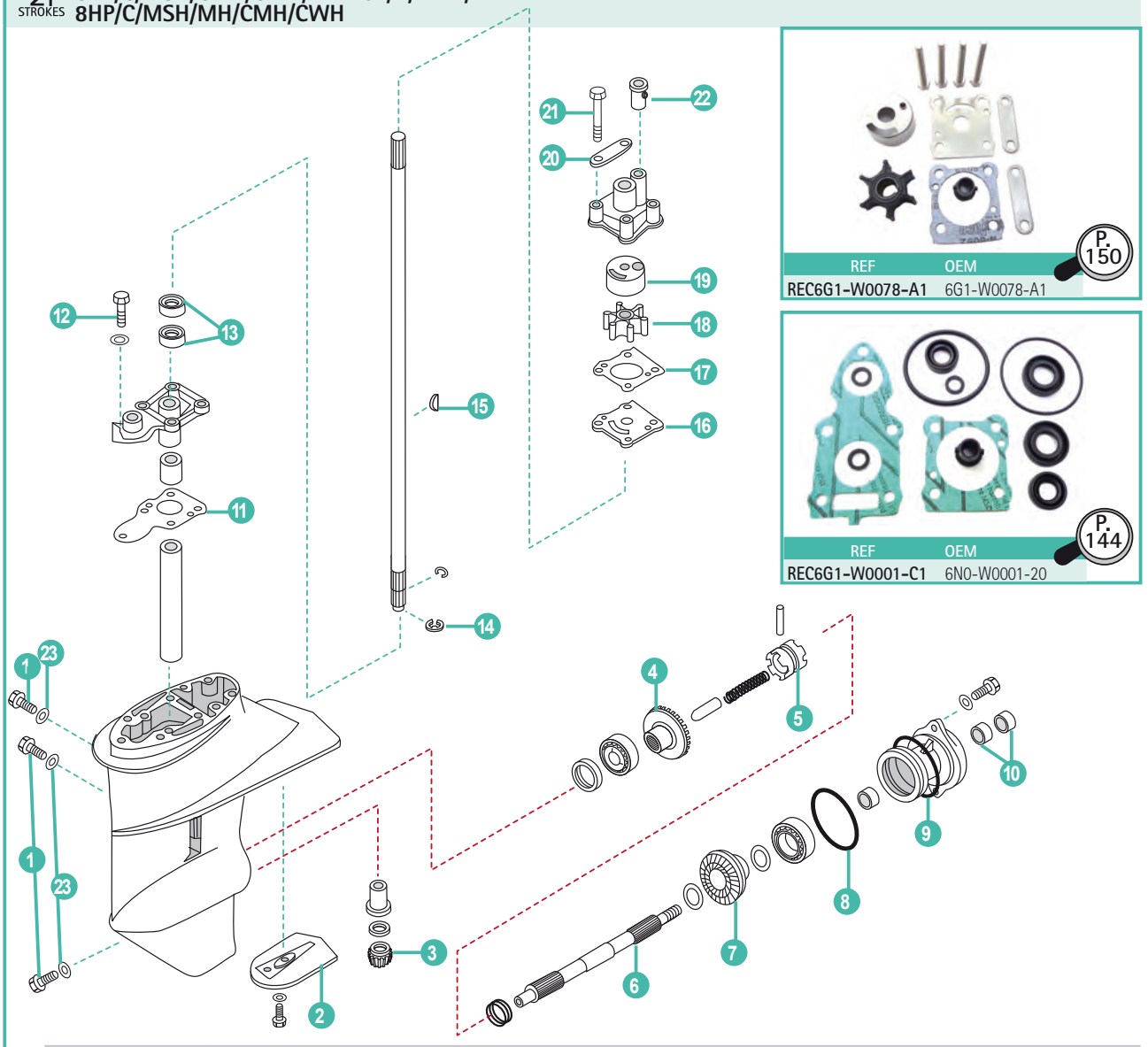

REF	OEM
REC6G1-W0078-A1	6G1-W0078-A1

P. 150

REF	OEM
REC6G1-W0001-C1	6N0-W0001-20

P. 144

	REF	OEM				
1	REC90340-08002	6E0-45316-09	TAPÓN	PLUG	TAPPO	BOUCHON REMPLISSAGE D'HUILE
2	TEN01118	6N0-G5251-00	ÁNODO	ANODE	ANODO	ANODE
3	REC6N0-G5551-00	6N0-G5551-00	PIÑÓN ATAQUE	INITIATIVE GEAR	MARCIA INIZIATIVA	PIGNON D'ATTAQUE
4	REC6N0-G5560-00	6N0-G5560-00	PIÑÓN MARCHA AVANTE	POSITIVE GEAR ASSY	PIGNONE MARCIA AVANTI	PIGNON DE MARCHE AVANT
5	REC6G1-45631-00	6G1-45631-00	EMBRAGUE DE GARRA	CLUTCH, DOG	SELETTORE	CRABOT
6	REC6G1-45611-01	6G1-45611-01	EJE HÉLICE	SHAFT, PROPELLER	ASSE ELICA	ARBRE D'HELICE
7	REC6N0-G5571-00	6N0-G5571-00	PIÑÓN MARCHA ATRÁS	REVERSE GEAR	PIGNONE MARCIA INDIETRO	PIGNON MARCHE ARRIÈRE
8	REC93210-49046	93210-49046	ARO TÓRICO	O-RING	O-RING	JOINT TORIQUE
9	REC93210-53M08	93210-53M08	ARO TÓRICO	O-RING	O-RING	JOINT TORIQUE
10	REC93101-15074	93101-15074	RETÉN	OIL SEAL	PARAOLIO	JOINT SPI
11	REC6G1-45315-A0	6G1-45315-A0	JUNTA	PACKING, LOWER CASING	GUARNIZIONE	JOINT
12	PAGB/T5783-M6X30	97095-06030	TORNILLO	BOLT	VITE	VIS
13	REC93101-11M23	93101-11M23	RETÉN	OIL SEAL	PARAOLIO	JOINT SPI
14	REC99001-06600	99001-06600	CERCLIP	CIRCLIP	CIRCLIP	CIRCLIP
15	REC90280-03024	90280-03024	CHAVETA	KEY	CHIAVETTA	CLAVETTE
16	REC6G1-44323-00	6G1-44323-00	PLATO	OUTTER PLATE, CARTRIDGE	PIASTRA	PLAQUE DE POMPE À EAU
17	REC6G1-44315-A0	6G1-44315-A0	JUNTA	GASKET, WATER PUMP	GUARNIZIONE	JOINT
18	REC6G1-44352-00	6G1-44352-00	TURBINA	IMPELLER	GIRANTE	TURBINE
19	REC6G1-44322-00	6G1-44322-00	CASQUILLO	INSERT, CARTRIDGE	GHIERA	INSERT DE POMPE À EAU
20	REC6G1-44328-00	6G1-44328-00	PLACA FIJACIÓN BOMBA DE AGUA	PLATE, WATER PUMP FIXED	PLACCA DI FISSAGGIO POMPA ACQUA	PLAQUE FIXATION DE POMPE À EAU
21	REC97095-06045	97095-06045	TORNILLO	BOLT	VITE	VIS
22	REC647-44366-00	647-44366-00	CASQUILLO GOMA	DAMPER	GHIERA GOMA	BAGUE CAOUTCHOUC
23	REC90430-08020	90430-08020	JUNTA	GASKET	GUARNIZIONE	JOINT

2T STROKES E8D • E8DMH

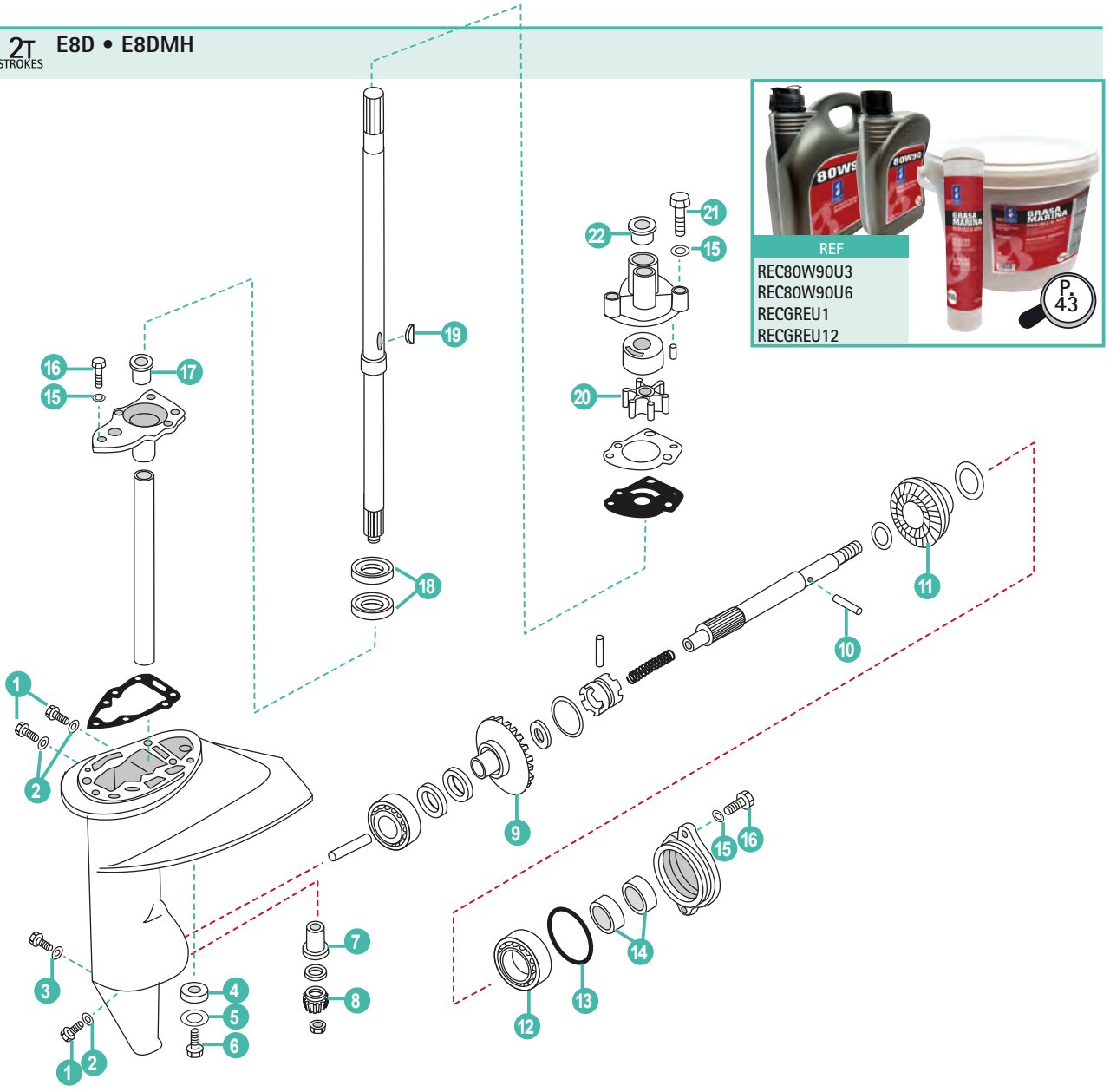

REF
REC80W90U3
REC80W90U6
RECGREU1
RECGREU12

P. 43

	REF	OEM				
1	REC90340-08002	90340-08M04	TORNILLO	BOLT	VITE	VIS
2	REC90430-08020	90430-08020	JUNTA	GASKET	GUARNIZIONE	JOINT
3	REC90430-06M03	90430-06M03	JUNTA	GASKET	GUARNIZIONE	JOINT
4	CM6E0-45251-11	677-45251-00	ÁNODO	ANODE	ANODO	ANODE
5	PAGB/T861.1-87	92990-06300	ARANDELA	WASHER	RONDELLA	RONDELLE
6	PAGB/T5783-M6X35	95895-06012	TORNILLO	BOLT	VITE	VIS
7	REC647-45316-09	647-45316-09	CASQUILLO	DAMPER	GHIERA GOMA	PIN
8	REC647-45551-00	647-45551-00	PIÑÓN ATAQUE	INITIATIVE GEAR	MARCIA INIZIATIVA	PIGNON D'ATTAQUE
9	REC647-45560-00	647-45560-00	PIÑÓN MARCHA AVANTE	POSITIVE GEAR ASSY	PIGNONE MARCIA AVANTI	PIGNON DE MARCHE AVANT
10	REC90250-05036	90250-05036	PASADOR	PIN	SPINOTTO	PIN
11	REC647-45570-00	647-45570-01	PIÑÓN MARCHA ATRÁS	REVERSE GEAR	PIGNONE MARCIA INDIETRO	PIGNON MARCHE ARRIÈRE
12	REC93306-00519	93306-00519	COJINETE	BEARING	CUSCINETTO	ROULEMENT
13	REC93210-58677	93210-58677	ARO	O-RING	O-RING	JOINT TORIQUE
14	REC93101-15074	93101-15074	RETÉN ACEITE	OIL SEAL	PARAOLIO	JOINT SPI
15	PAGB/T97.1-6	92990-06600	ARANDELA	WASHER	RONDELLA	RONDELLE
16	PAGB/T5783-M6X20	97095-06020	PERNO	BOLT	VITE	VIS
17	REC647-45316-09	647-45316-09	CASQUILLO	BUSH	GHIERA	BAGUE
18	REC93101-18050	93101-18050	RETÉN ACEITE	OIL SEAL	PARAOLIO	JOINT SPI
19	REC90280-03024	90280-03024	CHAVETA	KEY	CHIAVETTA	CLAVETTE
20	REC662-44352-01	662-44352-01	IMPULSOR	IMPELLER	GIRANTE	TURBINE
21	REC97095-06040	97095-06040	PERNO	BOLT	VITE	VIS
22	REC647-44366-00	647-44366-00	GOMA	RUBER BAND	GOMMA	BAGUE

2T STROKES E9.9D • E15D

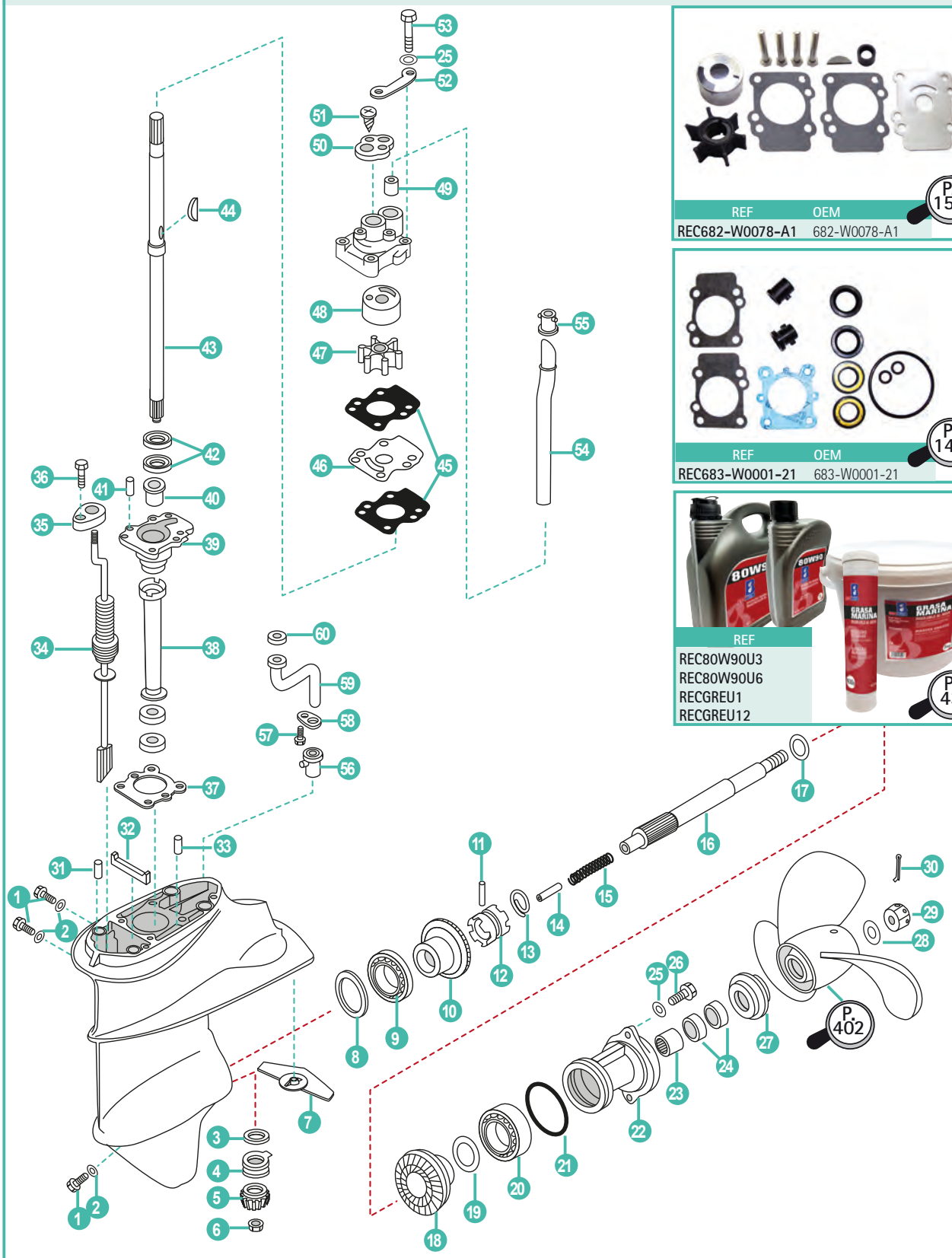

REF	OEM
REC682-W0078-A1	682-W0078-A1

P. 150

REF	OEM
REC683-W0001-21	683-W0001-21

P. 144

REF
REC80W90U3
REC80W90U6
RECGREU1
RECGREU12

P. 43

P. 402

	REF	OEM				
1	REC90340-08002	90340-08014	TAPÓN	PLUG, STRAIGHT SCREW	TAPPO	BOUCHON DE VIDANGE
2	REC90430-08020	90430-08020	JUNTA	GASKET	GUARNIZIONE	JOINT
3	PAF15-06000009	6E7-45587-01-30	GRUESO (1.20mm)	SHIM (1.20mm)	SPESSORE (1.20mm)	CALE (1.20 mm)
4	REC93341-214U1	93341-214U1	RODAMIENTO	BEARING	CUSCINETTO	ROULEMENT
5	REC6E7-45551-00	6E7-45551-00	PIÑÓN ATAQUE	INITIATIVE GEAR	MARCIA INIZIATIVA	PIGNON D'ATTAQUE
6	REC90179-08M06	90179-08M06	TUERCA	NUT	DADO	ÉCROU
7	TEN01116	6B4-45251-00	ÁNODO	ANODE	ANODO	ANODE

	REF	OEM				
	PAF15-06000010-1	664-45567-05	GRUESO (0.05mm)	SHIM (0.05mm)	SPESSORE (0.05mm)	CALE (0.05 mm)
8	PAF15-06000010-2	664-45567-12	GRUESO (0.12mm)	SHIM (0.12mm)	SPESSORE (0.12mm)	CALE (0.12 mm)
	PAF15-06000010-5	664-45567-30	GRUESO (0.30mm)	SHIM (0.30mm)	SPESSORE (0.30mm)	CALE (0.30 mm)
	PAF15-06000010-7	664-4556-50	GRUESO (0.50mm)	SHIM (0.50mm)	SPESSORE (0.50mm)	CALE (0.50 mm)
9	REC93332-00005	93332-00005	RODAMIENTO	BEARING	CUSCINETTO	ROULEMENT
10	REC6E7-45560-01	6E7-45560-00	PIÑÓN MARCHA AVANTE	POSITIVE GEAR ASSY	PIGNONE MARCIA AVANTI	PIGNON DE MARCHE AVANT
11	REC90250-05010	90250-05010	PASADOR	PIN, STRAIGHT	SPINOTTO	PIN
12	REC682-45631-00	682-45631-00	EMBRAGUE DE GARRA	CLUTCH, DOG	SELETTORE	CRABOT
13	REC648-45633-00	648-45633-00	ANILLO	RING, CROSS PIN	O-RING	JOINT TORIQUE
14	REC650-45635-00	650-45635-00	PISTÓN	PLUNGER, SHIFT	PISTONE	PISTON
15	PAF15-06070002	90501-14M06	MUELLE	SPRING, COMPRESSION	MOLLA	RESSORT
16	REC683-45611-00	683-45611-00	EJE HÉLICE	SHAFT, PROPELLER	ASSE ELICA	ARBRE D'HELICE
17	REC90201-17682	90201-17682	ARANDELA	WASHER, PLATE	RONDELLA	RONDELLE
18	REC6E7-45570-00	6E7-45571-00	PIÑÓN MARCHA ATRÁS	REVERSE GEAR	PIGNONE MARCIA INDIETRO	PIGNON MARCHE ARRIÈRE
	PAF15-06080006-1	626-45577-00-01	GRUESO (0.10mm)	SHIM (0.10mm)	SPESSORE (0.10mm)	CALE (0.10 mm)
19	PAF15-06080006-3	626-45577-00-03	GRUESO (0.30mm)	SHIM (0.30mm)	SPESSORE (0.30mm)	CALE (0.30 mm)
	PAF15-06080006-5	626-45577-00-05	GRUESO (0.50mm)	SHIM (0.50mm)	SPESSORE (0.50mm)	CALE (0.50 mm)
20	REC93306-00501	93306-00501	RODAMIENTO	BEARING	CUSCINETTO	ROULEMENT
21	REC93210-57M09	93210-57M09	ARO TÓRICO	O-RING	O-RING	JOINT TORIQUE
22	REC683-45361-01-4D	683-45361-00-EJ	DIÁBOLO	CAP, LOWER CASING	COP. CASSA INGRANAGGI	DIABOLO
23	REC93315-317U2	93315-317U2	RODAMIENTO	BEARING	CUSCINETTO	ROULEMENT
24	REC93101-17054	93101-17054	RETÉN	OIL SEAL	PARAOLIO	JOINT SPI
25	PAGB/T97.1-6	92990-06600	ARANDELA	WASHER, PLATE	RONDELLA	RONDELLE
26	PAGB/T5783-M6X20	97395-06020	TORNILLO	BOLT	VITE	VIS
27	REC6E7-45987-00	6E7-45987-00	ESPACIADOR	SPACER	DISTANZIALE	ENTRETOISE
28	PAGB/T96-10	90201-10M01	SEPARADOR	SPACER	DISTANZIALE	CALE
29	PAF15-06000016	90171-10M01	TUERCA HÉLICE	NUT, CASTLE	DADO ELICA	ÉCROU
30	PAGB/T91-2.5X20	91490-30020	PASADOR ALETAS	PIN, COTTER	PIN ELICA	CLAVETTE
31	REC93606-12019	93606-12019	PIN	PIN	SPINOTTO	PIN
32	REC682-45376-01	682-45376-01	GUÍA RETÉN	GUIDE, SEAL DAMPER	GUIDA BOCCOLA	GUIDE
33	PAF25-04000007	93604-08062	PIN	PIN, DOWEL	SPINOTTO	PIN
34	REC682-44147-00	682-44147-00	TAPÓN GUÍA	BOOT, SHIFT ROD	TAPPO GUIDA	GUIDE
35	REC682-44176-00	682-44176-00	SOPORTE	BRACKET	SUPPORTO	SUPPORT
36	PAGB/T845-ST4.8X9	97780-50510	TORNILLO	SCREW	VITE	VIS
37	REC683-45315-A0	683-45315-00	JUNTA	PACKING, LOWER CASING	GUARNIZIONE	JOINT
38	REC6E7-45536-00	6E7-45536-00	CAMISA EJE	SLEEVE, DRIVE SHAFT	TUBO GUIDA	TUBE GUIDE
39	REC6E7-45331-00-CA	6E7-45331-00-9M	CUERPO DE RODAMIENTO	HOUSING, BEARING	CUSCINETTO	LOGEMENT
40	REC626-45316-09	626-45316-09	CASQUILLO	BUSHING, DRIVE SHAFT	GHIERA	BAGUE
41	REC93606-12019	93606-12019	PIN	PIN, DOWEL	SPINOTTO	PIN
42	REC93101-20048	93101-20048	RETÉN	OIL SEAL	PARAOLIO	JOINT SPI
43	REC6E7-45501-00	6E7-45501-00	EJE **S**	DRIVE SHAFT COMP. **S**	ASSE VERTICALE **S**	ARBRE VERTICAL **S**
	REC6E7-45501-11	6E7-45501-10	EJE **L**	DRIVE SHAFT COMP. **L**	ASSE VERTICALE **L**	ARBRE VERTICAL **L**
44	REC90280-03024	90280-03024	CHAVETA	KEY, WOODRUFF	CHIAVETTA	CLAVETTE
45	REC682-44315-00	682-44315-00	JUNTA	GASKET, WATER PUMP	GUARNIZIONE	JOINT
46	REC682-44323-40	682-44323-00	PLATO	OUTER PLATE, CARTRIDGE	PIASTRA	PLAQUE DE POMPE À EAU
47	REC682-44352-01	682-44352-00	TURBINA	IMPELLER	GIRANTE	TURBINE
48	REC682-44322-00	682-44322-00	CASQUILLO INOX.	INSERT, CARTRIDGE	GHIERA INOX.	INSERT DE POMPE À EAU
49	REC682-44365-00	682-44365-00	CASQUILLO GOMA	DAMPER, WATER SEAL	GHIERA GOMA	BAGUE
50	REC682-44312-00	682-44312-00	TAPA CUERPO BOMBA AGUA	COVER, WATER PUMP HOUSING	COPERCHIO CORPO ACQUA	CORPS DE POMPE À EAU
51	PAGB/T845-ST4.2X16	97780-40112	TORNILLO	SCREW, TAPPING	VITE	VIS
52	REC682-44328-00	682-44328-00	PLATO	PLATE	PIASTRA	PLAQUE
53	PAGB/T5782-M6X45	947395-06040	TORNILLO	BOLT	VITE	VIS
54	REC682-44361-01	682-44361-01	TUBO DE AGUA **S**	WATER TUBE **S**	TUBO ACQUA **S**	TUBE D'EAU **S**
	REC682-44361-10	682-44361-10	TUBO DE AGUA **L**	WATER TUBE **L**	TUBO ACQUA **L**	TUBE D'EAU **L**
55	REC626-44365-01	626-44365-01	RETÉN	SEAL	PARAOLIO	JOINT SPI
56	REC6E7-44366-00	6E7-44366-00	CASQUILLO GOMA	WATER SEAL	BOCCOLA GOMMA	GUIDE CAOUTCHOUC
57	PAGB/T5783-M6X10	97095-06010	TORNILLO	BOLT	VITE	VIS
58	REC683-44373-00	683-44373-00	PLACA FIJACION TUBO	PLATE WATER TUBE	PLACCA SUPPORTO TUBO	PLAQUE DE FIXATION DE TUBE
59	REC683-44362-01	683-44361-01	TUBO DE AGUA	WATER TUBE "B"	TUBO ACQUA	TUBE D'EAU
60	REC683-44365-01	683-44365-01	CASQUILLO GOMA	SEAL WATER TUBE	BOCCOLA GOMMA	GUIDE CAOUTCHOUC

2T STROKES 9.9C/F/FMH/MSH/MH/MHH • 13.5AMH • 15FE/FMH/F/MSH/MH • E15C



REF
REC80W90U3
REC80W90U6
RECGREU1
RECGREU12

P. 43

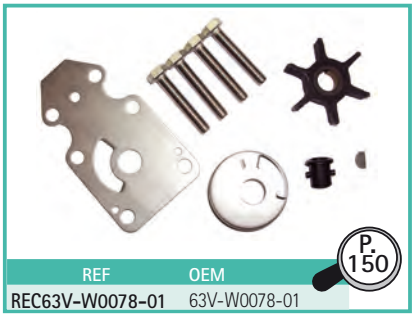

REF	OEM
REC63V-W0078-01	63V-W0078-01

P. 150

P. 402

	REF	OEM				
1	REC90430-08020	90430-08020	ARANDELA	WASHER	RONDELLA	RONDELLE
2	REC90340-08002	90340-08002	TAPÓN ACEITE	PLUG, OIL	TAPPO OLIO	BOUCHON REMPLISSAGE D'HUILE
3	PAGB/T6182-M5	90185-05002	TUERCA	LOCK NUT	DADO	ÉCROU
4	PAF15-06000002	63V-45215-00	CUBIERTA ENTRADA AGUA **A**	WATER INLET **A**	COPERCHIO ACQUA **A**	GRILLE D'ENTREE D'EAU **A**
5	PAF15-06000003	6G1-45214-00	CUBIERTA ENTRADA AGUA **B**	WATER INLET **B**	COPERCHIO ACQUA **B**	GRILLE D'ENTREE D'EAU **B**
6	PAGB/T820-M5X25	90152-05M04	TORNILLO	SCREW	VITE	VIS

	REF	OEM				
7	PAF15-06000001	63V-45311-01-4D	CARTER	CASTING, LOWER	CARTER	CARTER D'EMBASE
8	CM61N-45251-01	61N-45251-01	ÁNODO	ANODE	ANODO	ANODE
9	REC93341-41414	93341-41414	RODAMIENTO	BEARING	CUSCINETTO	ROULEMENT
10	PAF15-06000008	6E8-45587-10-13	GRUESO (1.13 mm)	SHIM (1.13mm)	SPESSORE (1.13 mm)	CALE (1.13 mm)
11	REC63V-45551-00	63V-45551-00	PIÑÓN ATAQUE	INITIATIVE GEAR	MARCIA INIZIATIVA	PIGNON D'ATTAQUE
12	REC90179-08M06	90179-08M06	TUERCA	LOCK NUT	DADO	ÉCROU
13	PAF15-06000010-1	664-45567-01-10	GRUESO	SHIM	SPESSORE	CALE
14	REC93332-00005	93332-00005	COJINETE	BEARING	CUSCINETTO	ROULEMENT
15	REC6E7-45560-01	6E7-45560-01	PIÑÓN MARCHA AVANTE	POSITIVE GEAR ASSY	PIGNONE MARCIA AVANTI	PIGNON DE MARCHE AVANT
16	REC682-45631-00	682-45631-00	SELECTOR	CLUTCH BLOCK	SELETTORE	CRABOT
17	REC90250-05010	90250-05010	PASADOR	PIN	SPINOTTO	PIN
18	REC648-45633-00	648-45633-00	MUELLE SELECTOR	RING, CROSS PIN	MOLLA SELETTORE	RESSORT
19	REC650-45635-00	650-45635-00	ÉMBOLO	PLUNGER	BULLONE	PISTON
20	PAF15-06070002	90501-14M06	MUELLE	SPRING	MOLLA	RESSORT
21	REC683-45611-00	683-45611-00	EJE HÉLICE	PROPELLER SHAFT	ASSE ELICA	ARBRE D'HELICE
22	REC90201-17682	90201-17682	ARANDELA	WASHER	RONDELLA	RONDELLE
23	REC6E7-45570-00	6E7-45571-00	PIÑÓN MARCHA ATRÁS	REVERSE GEAR	PIGNONE MARCIA INDIETRO	PIGNON MARCHE ARRIÈRE
24	PAF15-06080006-1	626-45577-00	GRUESO	SHIM	SPESSORE	CALE
25	REC93306-00501	93306-00501	RODAMIENTO	BEARING (B6005)	CUSCINETTO	ROULEMENT
26	REC93210-57M09	93210-57M09	TÓRICA	O-RING	O-RING	JOINT TORIQUE
27	PAF15-06080003	93210-56M80	TÓRICA	O-RING	O-RING	JOINT TORIQUE
28	REC683-45361-01-4D	683-45361-02-4D	DIÁBOLO	CAP, LOWER CASING	COPERCHIO CARTER INFERIORE	DIABOLO
29	PAGB/T97.1-6	92995-06600	ARANDELA	WASHER	RONDELLA	RONDELLE
30	PAGB/T5783-M6X20	97095-06020	TORNILLO	SCREW	VITE	VIS
31	REC93315-317U2	93315-317U2	COJINETE	BEARING	CUSCINETTO	ROULEMENT
32	REC93101-17054	93101-17054	RETÉN DE ACEITE	OIL SEAL	PARAOLIO	JOINT SPI
33	PAF15-06000015	6E7-45987-01	ESPACIADOR	SPACER	DISTANZIALE	ENTRETOISE
34	REC6E7-45987-00	6E7-45987-01	SEPARADOR	SPACER	DISTANZIALE	ENTRETOISE
35	REC90171-10M01	90171-10M01	TUERCA HÉLICE	NUT, CASTLE	DADO ELICA	ÉCROU
36	REC91490-30025	91490-30020	PASADOR ALETAS	PIN, COTTER	PIN ELICA	CLAVETTE
37	PAF15-00000013	93604-10M03	PIN	PIN	SPINOTTO	PIN
38	PAF15-06030000S	63V-44150-00	EJE SELECTOR **S**	SHIFT CAM ASSY **S**	ASSE SELETTORE **S**	ARBRE SELECTEUR **S**
	PAF15-06030000L	63V-44150-10	EJE SELECTOR **L**	SHIFT CAM ASSY **L**	ASSE SELETTORE **L**	ARBRE SELECTEUR **L**
39	PAGB/T5783-M8X25	97080-08025	TORNILLO	SCREW	VITE	VIS
40	REC93210-06ME6	93210-06ME6	TÓRICA	O-RING	O-RING	JOINT TORIQUE
41	REC63V-45315-A0	63V-45315-A0	JUNTA	GASKET	GUANIZIONE	JOINT
42	REC93315-314V8	93315-314V8	COJINETE	BEARING	CUSCINETTO	PALIER
43	PAF15-06000006	63V-45536-00	TUBO GUÍA	SLEEVE, DRIVE SHAFT	TUBO GUIDA	TUBE
44	REC63V-45331-00-5B	63V-45331-00-5B	CUERPO DEL COJINETE	SHELL, BEARING	CORPO DE CUSCINETTO	LOGEMENT DE PALIER
45	PAF15-06020005	63V-45375-00	GOMA	SEAL	GOMMA	TAMPON
46	REC626-45316-09	90381-14020	CASQUILLO	BUSH, SOLID	BOCCOLA	BAGUE
47	REC93101-20048	93101-20048	RETÉN DE ACEITE	OIL SEAL	PARAOLIO	JOINT SPI
48	REC63V-45510-01	63V-45510-01	EJE VERTICAL **S**	DRIVE SHAFT ASSY **S**	ASSE VERTICALE **S**	ARBRE VERTICAL **S**
	REC63V-45510-11	63V-45510-11	EJE VERTICAL **L**	DRIVE SHAFT ASSY **L**	ASSE VERTICALE **L**	ARBRE VERTICAL **L**
49	REC664-44338-00	63V-44338-00	CHAVETA	KEY, WOODRUFF	CHIAVETTA	CLAVETTE
50	REC63V-44323-00	63V-44323-00	JUNTA TAPA BOMBA AGUA	GASKET, WATER PUMP COVER	GUARNIZIONE COPERCHIO	JOINT COUVERCLE
51	PAJASOF404-31-045	93210-44398	ARO TÓRICO	O-RING	O-RING	JOINT TORIQUE
52	REC63V-44352-01	63V-44352-01	TURBINA	IMPELLER	GIRANTE	TURBINE
53	REC63V-44301-00	63V-44301-00	CUERPO DE BOMBA	PUMP HOUSING	CORPO POMPA	CORPS DE POMPE À EAU
54	REC63V-44322-00	63V-44322-00	TAPA, BOMBA AGUA	COVER, INNER WATER PUMP	COPERCHIO, POMPE ACQUA	INSERT DE POMPE À EAU
55	PAF15-00000013	93604-12M07	PASADOR	PIN	SPINOTTO	PIN
56	REC647-44366-00	647-44366-00	TUBO GOMA BOMBA AGUA	RUBBER TUBE, WATER PUMP	TUBO IN GOMMA, POMPA	DURITE DE COUTCHOUC
57	PAF15-06000014	63V-44328-00	PLACA	OUT PLATE	PIASTRA	PLAQUE
58	REC97080-08045	97080-08045	PERNO	STUD	BULLONE	BOULON
59	REC63V-44361-01	63V-44361-01	TUBO DE AGUA **S**	WATER TUBE **S**	TUBO DELL'ACQUA **S**	DURITE D'EAU **S**
	REC63V-44361-11	63V-44361-11	TUBO DE AGUA **L**	WATER TUBE **L**	TUBO DELL'ACQUA **L**	DURITE D'EAU **L**
60	PAF15-02000006	63V-44365-10	GOMA DEL TUBO DE AGUA	I-SHAPED RUBBER BAND	GOMMA TUBO ACQUA	PLOT CAOUTCHOUC DE TUBE D'EAU

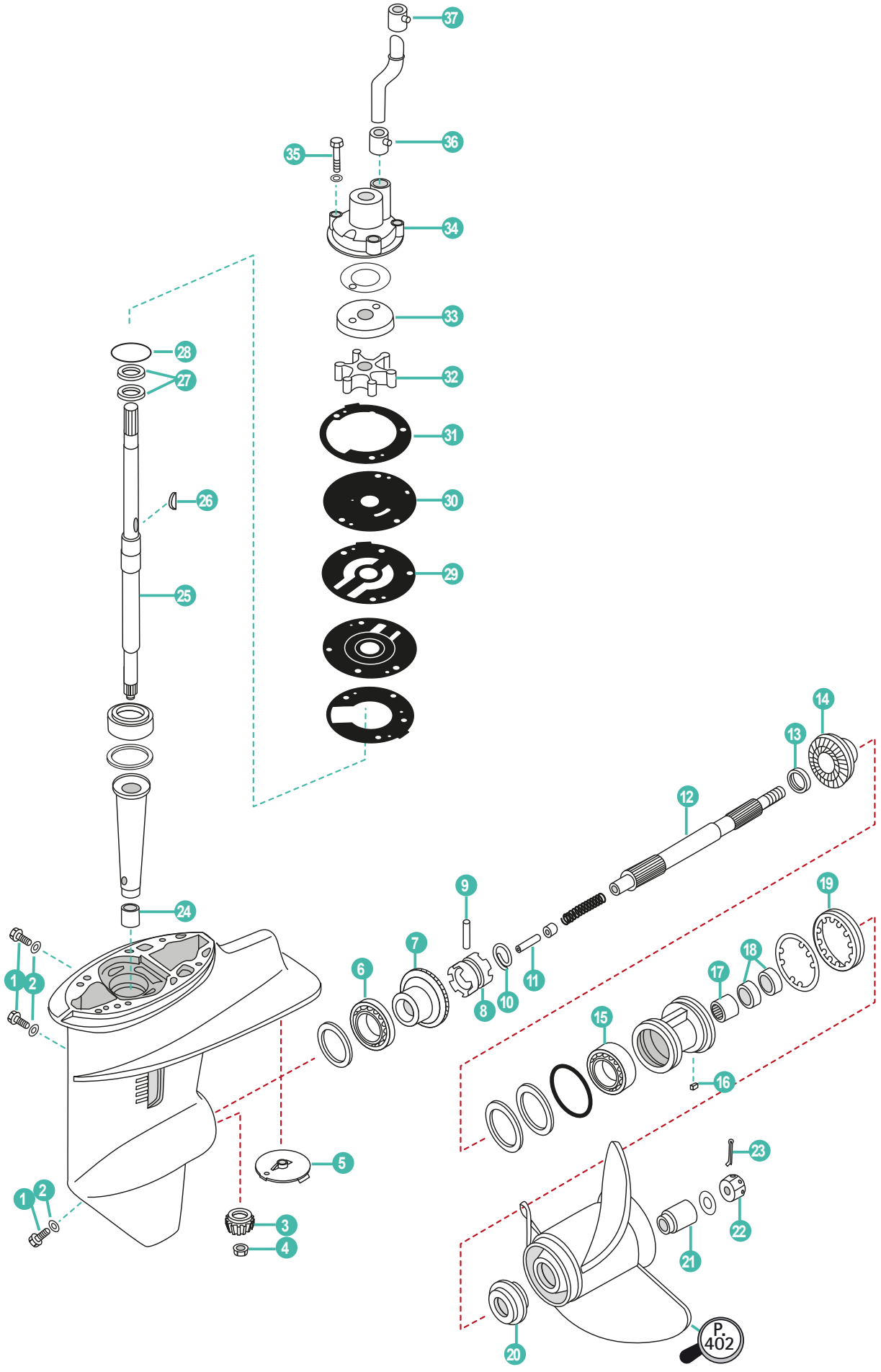
37
36
35
34
33
32
31
30
29
28
27
26
25
24
14
13
12
9
19
7
18
6
17
8
10
11
15
16
1
2
5
23
22
21
3
4
20
P. 402

	REF	OEM				
1	REC90340-08002	90340-08002	TAPÓN ACEITE	PLUG, OIL	TAPPO OLIO	BOUCHON REMPLISSAGE D'HUILE
2	REC90430-08020	90430-08020	ARANDELA	WASHER	RONDELLA	RONDELLE
3	REC689-45551-00	689-45551-00	PIÑÓN ATAQUE	INITIATIVE GEAR	MARCIA INIZIATIVA	PIGNON D'ATTAQUE
4	REC90179-09M02	90179-09M02	TUERCA, PIÑÓN	NUT	DADO	ÉCROU
5	CM664-45371-01	664-45371-01-00	ÁNODO	ANODE	ANODO	ANODE
6	REC93332-00005	93332-00005	COJINETE	BEARING	CUSCINETTO	ROULEMENT
7	REC689-45560-00	689-45560-00	PIÑÓN MARCHA AVANTE	POSITIVE GEAR ASSY	PIGNONE MARCIA AVANTI	PIGNON DE MARCHE AVANT
8	REC664-45631-01	664-45631-01	SELECTOR	CLUTCH	SELETTORE	CRABOT
9	REC90250-05010	90250-05010	PASADOR	PIN	SPINOTTO	LEVIER
10	REC648-45633-00	648-45633-00	ARO, PASADOR	CROSS PIN	O-RING	JOINT TORIQUE
11	REC648-45635-00	648-45635-00	PIVOTE	PIN	PERNO	ARBRE
12	REC689-45611-00	689-45611-00	EJE HÉLICE	SHAFT PROPELLER	ASSE ELICA	ARBRE D'HELICE
13	REC90201-20417	90201-20417	ARANDELA	WASHER	RONDELLA	RONDELLE
14	REC689-45571-00-00	689-45570-00	PIÑÓN MARCHA ATRÁS	REVERSE GEAR	PIGNONE MARCIA INDIETRO	PIGNON MARCHE ARRIÈRE
15	REC93306-00612	93306-00612	COJINETE	BEARING	CUSCINETTO	ROULEMENT
16	REC90282-04010	90282-04010	CHAVETA	KEY	CHIAVETTA	CLAVETTE
17	REC93315-22004	93315-22004	COJINETE	BEARING	CUSCINETTO	ROULEMENT
18	REC93101-20M07	93101-20M07	RETÉN	OIL SEAL	PARAOLIO	JOINT D'HUILE
19	REC664-45384-00	664-45384-00	TUERCA	NUT	DADO	ÉCROU
20	REC664-45987-00	664-45987-00	ESPACIADOR	SPACER	DISTANZIALE	CALE
21	REC689-45997-00	689-45997-00	ESPACIADOR	SAPCER	DISTANZIALE	CALE
22	REC90171-14013-00	90171-14013	TUERCA HÉLICE	NUT	DADO	ÉCROU
23	REC91490-30030	91490-30030	PASADOR	COTTER PIN	PIN	PIN
24	REC93315-017U4	93315-017U4	COJINETE, PIÑÓN	BEARING	CUSCINETTO	ROULEMENT
25	REC689-45501-10	689-45501-10	EJE L	DRIVE SHAFT L	ASSE VERTICALE L	ARBRE VERTICAL L
26	REC664-44338-00	664-44338-00	CUÑA	CHAVETA	KEY	CHIAVETTA
27	REC93101-22067	93101-22067	RETÉN ACEITE	OIL SEAL	PARAOLIO	JOINT SPI
28	REC689-44315-A0	689-44315-A0	JUNTA BASE	GASKET	GUARNIZIONE	JOINT
29	REC689-44316-A0	689-44316-A0	JUNTA BASE	GASKET	GUARNIZIONE	JOINT
30	REC689-44323-00	689-44323-03	CHAPA	PLATE	PIASTRA	PLAQUE
31	REC689-44324-A0	689-44324-A0	JUNTA, CHAPA	GASKET	GUARNIZIONE	JOINT
32	REC689-44352-02	689-44352-02	IMPULSOR	IMPELLER	GIRANTE	TURBINE
33	REC689-W4432-01	689-W4432-02	ACOPLE	INSERT CUP	ACCOPPIAMENTO	INSERT DE POMPE À EAU
34	REC689-44311-00	689-44311-03	CUERPO BOMBA AGUA	HOUSING W.P.	CORPO POMPA ACQUA	CORPS DE POMPE
35	REC90101-06M56	90101-06M56	TORNILLO CUERPO BOMBA	BOLT	VITE	VIS
36	REC626-44365-01	626-44365-01	RETÉN SUPERIOR TUBO DE AGUA	DUMPER WATER TUBE	PARAOLIO SUPERIORE TUBO ACQUA	BAGUE TUBE D'EAU
37	REC689-44366-00	689-44366-00	RETÉN SUPERIOR TUBO DE AGUA	DUMPER WATER TUBE	PARAOLIO SUPERIORE TUBO ACQUA	BAGUE TUBE D'EAU

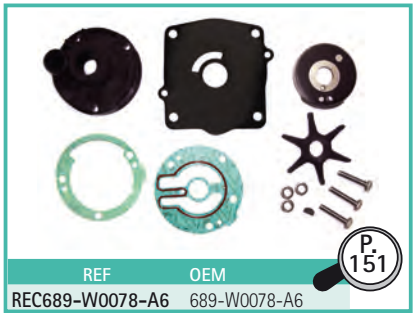

REF	OEM
REC689-W0078-A6	689-W0078-A6

P. 151

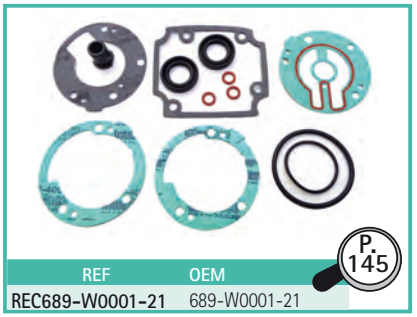

REF	OEM
REC689-W0001-21	689-W0001-21

P. 145



REF
REC80W90U3
REC80W90U6
RECGREU1
RECGREU12

P. 43

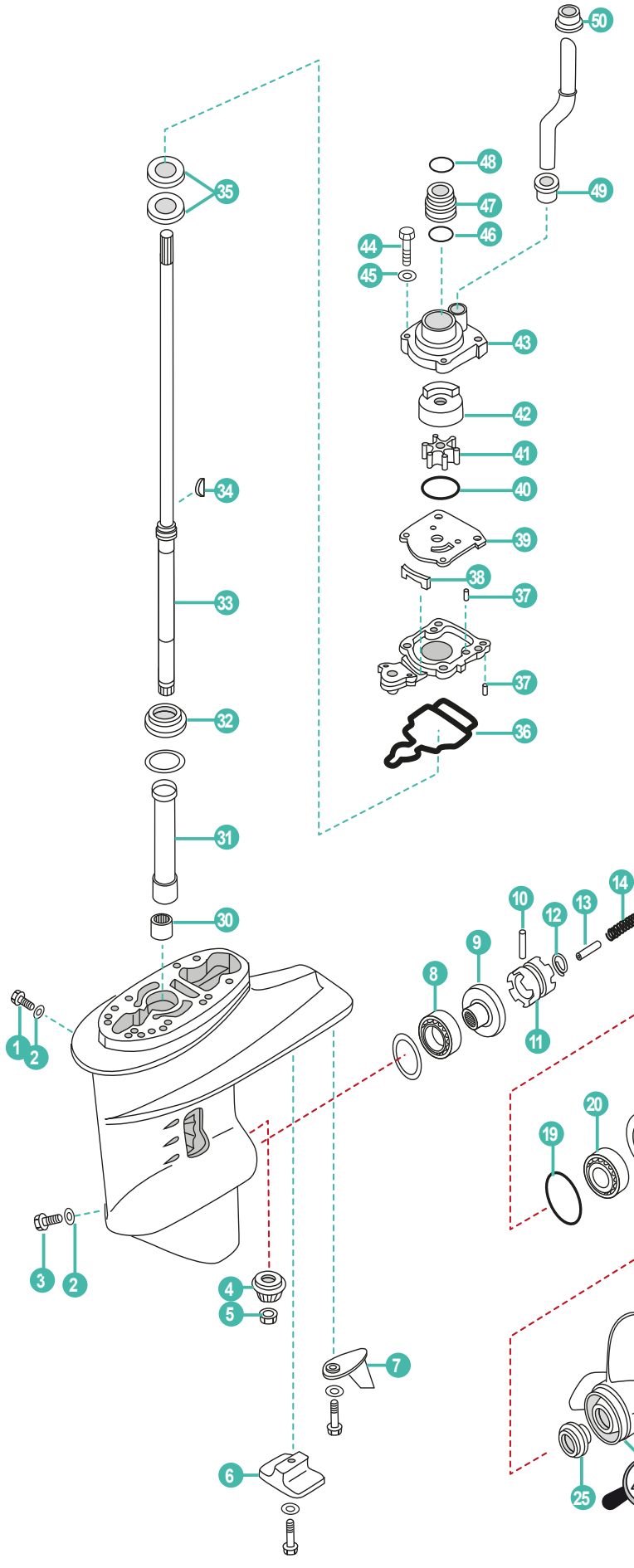

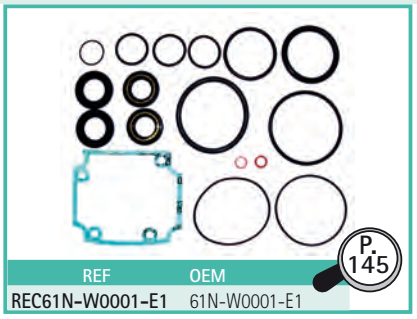

REF	OEM
REC61N-W0001-E1	61N-W0001-E1

P. 145

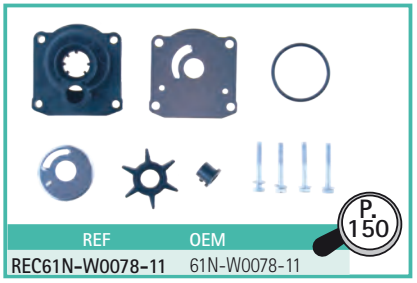

REF	OEM
REC61N-W0078-11	61N-W0078-11

P. 150



REF
REC80W90U3
REC80W90U6
RECGREU1
RECGREU12

P. 43

P. 402

	REF	OEM				
1	REC90340-08002	90340-08002	TAPÓN	PLUG, STRAIGHT SCREW	TAPPO	BOUCHON
2	REC90430-08020	90430-08020	JUNTA	GASKET	GUARNIZIONE	JOINT
3	REC688-45341-00	688-45341-10	TAPÓN VACIADO	PLUG, DRAIN	TAPPO	BOUCHON
4	REC61N-45551-00	61N-45551-00	PIÑÓN ATAQUE	INITIATIVE GEAR	MARCIA INIZIATIVA	PIGNON D'ATTAQUE
5	REC90179-10M14	90179-10M14	TUERCA	NUT	DADO	ÉCROU
6	CM61N-45251-01	61N-45251-01	ÁNODO	ANODE	ANODO	ANODE
7	TEN01130	61N-45371-00	ÁNODO ZINC	TAB-TRIM	ANODO ZINCO	ANODE
8	REC93332-00005	93332-00005	RODAMIENTO	BEARING	CUSCINETTO	ROULEMENT
9	REC61N-45560-10	61N-45560-10	PIÑÓN MARCHA AVANTE	POSITIVE GEAR ASSY	PIGNONE MARCIA AVANTI	PIGNON DE MARCHE AVANT
10	REC90250-05010	90250-05010	PASADOR	PIN, STRAIGHT	SPINOTTO	PIN
11	REC664-45631-00	664-45631-02	DEAPLAZABLE	CLUTCH, DOG	SCORREVOLE	CRABOT
12	REC648-45633-00	648-45633-00	MUELLE	RING, CROSS PIN	MOLLA	RESSORT
13	REC648-45635-00	648-45635-00	BULÓN	PLUNGER, SHIFT	BULLONE	BOULON
14	PAF25-04060002	90501-10065	MUELLE COMPRESIÓN	SPRING, COMPRESSION	MOLLA	RESSORT
15	REC6L2-45611-00	6L2-45611-00	EJE HÉLICE	SHAFT, PROPELLER	ASSE ELICA	ARBRE D'HELICE
16	REC90201-20417	90201-20417	ARANDELA	WASHER, PLATE	RONDELLA	RONDELLE
17	REC61N-45570-00	61N-45571-00	PIÑÓN MARCHA ATRÁS	REVERSE GEAR	PIGNONE MARCIA INDIETRO	PIGNON MARCHE ARRIÈRE
18	PAF25-04070005-1	6L2-45577-00-10	GRUESO (1.0 mm)	SHIM (t:1.0mm)	SPESSORE (1.0 mm)	CALE (1.0 mm)
19	REC93210-64ME7	93210-64ME7	ARO TÓRICO	O-RING	O-RING	JOIN TORIQUE
20	REC93306-00612	93306-00612	RODAMIENTO	BEARING	CUSCINETTO	ROULEMENT
21	PAF25-04070001	61N-45361-01-4D	DIÁBOLO	CAP, LOWER CASING	COP. CASSA INGRANAGGI	DIAVOLO
22	REC93315-22004	93315-22004	RODAMIENTO	BEARING	CUSCINETTO	ROULEMENT
23	REC93101-20M07	93101-20M07	RETÉN	OIL SEAL	PARAOLIO	JOINT SPI
24	REC93210-65M50	93210-65M50	ARO TÓRICO	O-RING	O-RING	JOINT TORIQUE
25	REC6L2-45987-00	6L2-45987-01	SEPARADOR	SPACER	DISTANZIALE	CALE
26	REC689-45997-00	689-45997-00	SEPARADOR	SPACER	DISTANZIALE	CALE
27	PAGB/T97.1-14	92990-14200	ARANDELA	WASHER, PLAIN	RONDELLA	RONDELLE
28	REC90171-14013-00	90171-14013	TUERCA	NUT, CASTLE	DADO	ÉCROU
29	PAGB/T91-1.6x12	91490-30022	PASADOR	PIN	SPINOTTO	PIN
30	REC93315-220V7	93315-220V7	RODAMIENTO	BEARING	CUSCINETTO	ROULEMENT
31	PAF25-04000002	61N-45536-00	TUBO GUÍA	SLEEVE, DRIVE SHAFT	TUBO GUIDA	TUBE GUIDE
32	REC93332-000W5	93332-000WS	RODAMIENTO	BEARING	CUSCINETTO	ROULEMENT
33	REC61N-45510-00	61N-45510-00	EJE VERTICAL **S**	DRIVE SHAFT ASSY **S**	ASSE VERTICALE **S**	ARBRE VERTICAL **S**
	REC61N-45510-10	61N-45510-10	EJE VERTICAL **L**	DRIVE SHAFT ASSY **L**	ASSE VERTICALE **L**	ARBRE VERTICAL **L**
34	REC90280-03M03	90280-03M03	CHAVETA	KEY, WOODRUFF	CHIAVETTA	CLAVETTE
35	REC93101-22067	93101-22067	RETÉN	OIL SEAL	PARAOLIO	JOINT SPI
36	PAF25-04000009	61N-45315-00	JUNTA	PACKING, LOWER CASING	GUARNIZIONE	JOINT
37	PAF25-04000007	93604-10M03	PIN CENTRADO	PIN, DOWEL	SPINOTTO	PIN
38	PAF25-04000013	61N-45127-00	RETÉN	SEAL	PARAOLIO	JOINT SPI
39	REC61N-44323-00	61N-44323-00	PLATO BOMBA AGUA	OUTTER PLATE, CARTRIDGE	PIASTRA POMPA ACQUA	PLAQUE
40	PAF25-04050003	93210-45161	ARO TÓRICO	O-RING	O-RING	JOINT TORIQUE
41	REC6H4-44352-02	6H4-44352-02	TURBINA	IMPELLER	GIRANTE	TURBINE
42	REC61N-44322-00	61N-44322-01	CASQUILLO INOX.	INSERT, CARTRIDGE	BOCCOLA INOX.	INSERT DE POMPE À EAU
43	PAF25-04050001	61N-44311-01	CUERPO BOMBA	HOUSING, WATER PUMP	CORPO POMPA	CORPS DE POMPE À EAU
44	REC97095-06040	97095-06040	TORNILLO	BOLT	VITE	VIS
45	PAGB/T97.1-6	92995-06600	ARANDELA	WASHER	RONDELLA	RONDELLE
46	PAGB/T3452.1-25.8X2	93210-26130	ARO TÓRICO	O-RING	O-RING	JOINT TORIQUE
47	PAF25-04000017S	61N-44362-00	TUBO AGUA **S**	WATER TUBE **S**	TUBO ACQUA **S**	TUBE D'EAU **S**
	PAF25-04000017	61N-44362-10	TUBO AGUA **L**	WATER TUBE **L**	TUBO ACQUA **L**	TUBE D'EAU **L**
48	PAGB/T3452.1-25.8X2	93210-22164	ARO TÓRICO	O-RING	O-RING	JOINT TORIQUE
49	PAF25-04050004	6L2-44367-00	CASQUILLO	DAMPER WATER PIPE	BOCCOLA.	BAGUE TUBE D'EAU
50	REC689-44366-00	689-44366-00	CASQUILLO	DAMPER, WATER SEAL	BOCCOLA	BAGUE TUBE D'EAU

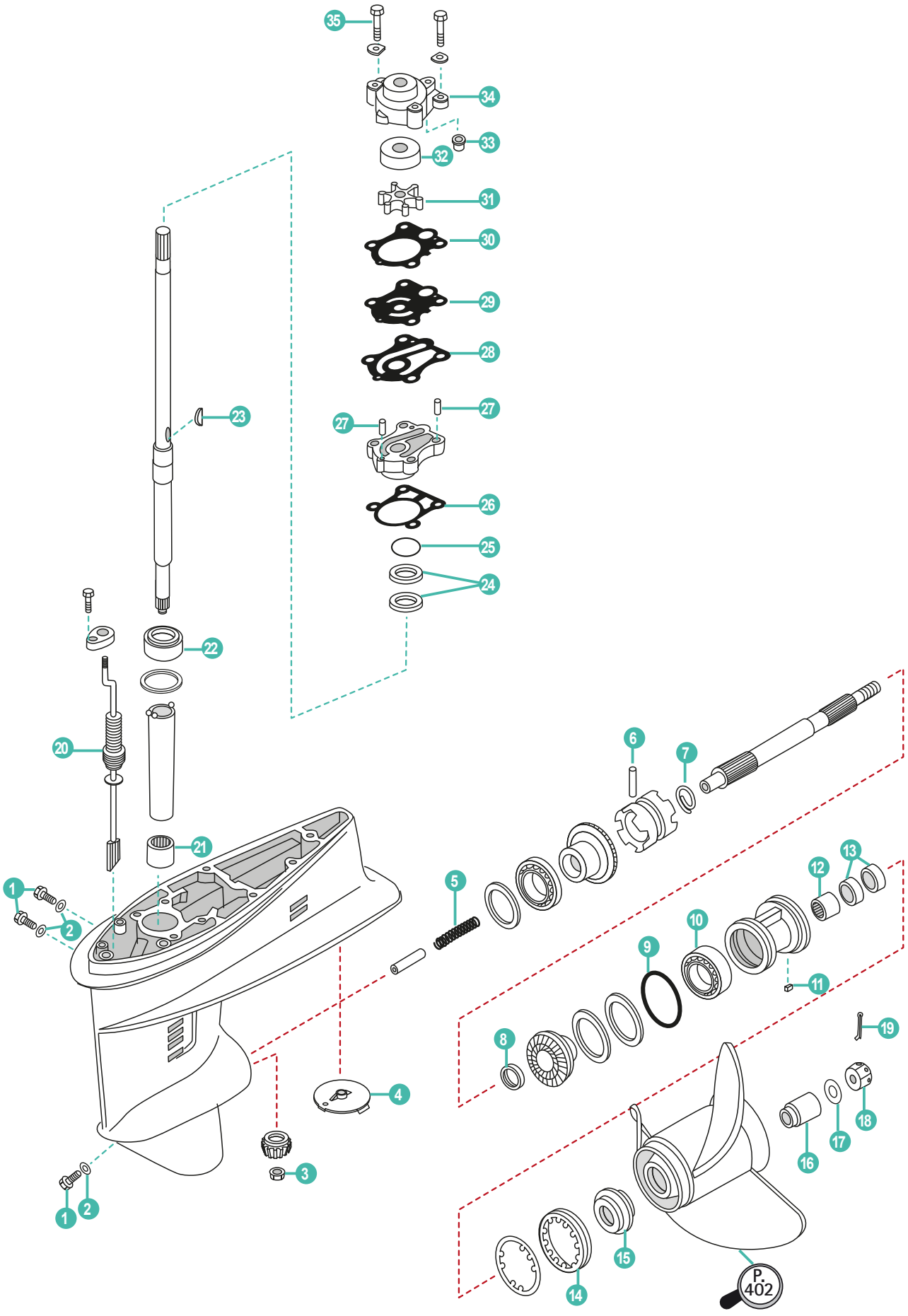
35
34
33
32
31
30
29
28
27
27
26
25
24
23
22
20
21
1
2
5
6
7
12
13
10
9
11
8
19
4
3
1
2
18
17
16
15
14
P. 402

	REF	OEM				
1	REC90340-08002	90340-08002	TAPÓN	PLUG, STRAIGHT SCREW	TAPPO	BOUCHON DE VIDANGE
2	REC90430-08020	90430-08020	JUNTA	GASKET	GUARNIZIONE	JOINT
3	REC90179-10M14	90179-10M14	TUERCA	NUT	DADO	ECROU
4	CM664-45371-01	664-45371-01	ÁNODO DERIVA	TAB-TRIM	ANODO	ANODE
5	PAF25-04060002	90501-10065	MUELLE	SPRING, COMPRESSION	MOLLA	RESSORT
6	REC90250-05010	90250-05010	PASADOR	PIN, STRAIGHT	SPINOTTO	PIN
7	REC648-45633-00	648-45633-00	ARO	RING CROSS PIN	O-RING	JOINT TORIQUE
8	REC90201-20417	90201-20417	ARANDELA	WASHER, PLATE	RONDELLA	RONDELLE
9	REC93210-60MA3	93210-60MA3	ARO TÓRICO	O-RING	O-RING	JOINT TORIQUE
10	REC93306-00612	93306-00612	RODAMIENTO	BEARING	CUSCINETTO	ROULEMENT
11	REC90282-04010	90282-04010	CHAVETA	KEY, STRAIGHT	CHIAVETTA	CLAVETTE
12	REC93315-22004	93315-22004	RODAMIENTO	BEARING	CUSCINETTO	ROULEMENT
13	REC93101-20M07	93101-20M07	RETÉN	OIL SEAL	PARAOLIO	JOINT SPI
14	REC664-45384-00	664-45384-00	TUERCA	NUT	DADO	EROU
15	REC6L2-45987-00	6L2-45987-01	DISTANCIADOR	SPACER	DISTANZIALE	ENTRETOISE
16	REC689-45997-00	689-45997-00	DISTANCIADOR	SPACER	DISTANZIALE	ENTRETOISE
17	PAGB/T97.1-14	92990-14200	ARANDELA	WASHER, PLAIN	RONDELLA	RONDELLE
18	REC90171-14013-00	90171-14013	TUERCA HÉLICE	NUT, CASTLE	DADO	ECROU D'HELICE
19	REC91490-30025	91490-30025	PIN	PIN	SPINOTTO	CLAVETTE
20	REC682-44147-00	682-44147-00	TAPÓN GUÍA	BOOT, SHIFT ROD	TAPPO	GUIDE
21	REC93315-220V7	93315-220V7	RODAMIENTO	BEARING	CUSCINETTO	ROULEMENT
22	REC93332-00001	93332-00001	RODAMIENTO	BEARING	CUSCINETTO	ROULEMENT
23	REC90280-03024	90280-03024	CHAVETA	KEY, WOODRUFF	CHIAVETTA	CLAVETTE
24	REC93101-23070	93101-23070	RETÉN	OIL SEAL	PARAOLIO	JOINT SPI
25	REC93210-41042	93210-41042	ARO TÓRICO	O-RING	O-RING	JOINT TORIQUE
26	REC663-44316-A0	663-44316-A0	JUNTA	GASKET, WATER PUMP	GUARNIZIONE	JOINT
27	PAF25-04000007	93604-08062	PIN	PIN	SPINOTTO	PIN
28	REC663-44324-00	663-44324-A0	JUNTA	GASKET, CARTRIDGE	GUARNIZIONE	JOINT
29	REC663-44323-00	663-44323-00	PLATO BOMBA AGUA	OUTTER PLATE	PIASTRA POMPA ACQUA	PLAQUE DE POMPE À EAU
30	REC663-44315-A0	663-44315-A0	JUNTA	GASKET, WATER PUMP	GUARNIZIONE	JOINT
31	REC6H4-44352-02	6H4-44352-02	TURBINA	IMPELLER	GIRANTE	TURBINE
32	REC663-44322-00	663-44322-00	CASQUILLO INOX	INSERT, CARTRIDGE	BOCCOLA INOX.	INSERT DE POMPE À EAU
33	REC663-44366-00	663-44366-00	CASQUILLO GOMA	DAMPER, WATER SEAL	BOCOLLA GOMMA	BAGUE
34	REC663-44311-02	6J8-44311-00	CUERPO BOMBA AGUA	HOUSING, WATER	CORPO POMPA ACQUA	CORPS DE POMPE À EAU
35	REC90119-08M13	90119-08M13	TORNILLO	BOLT, WITH WASHER	VITE	VIS

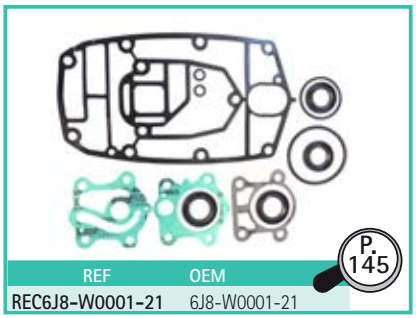

REF	OEM
REC6J8-W0001-21	6J8-W0001-21

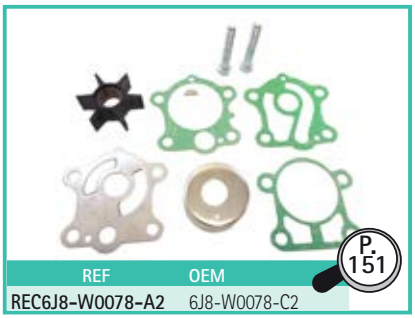

REF	OEM
REC6J8-W0078-A2	6J8-W0078-C2



REF
REC80W90U3
REC80W90U6
RECGREU1
RECGREU12

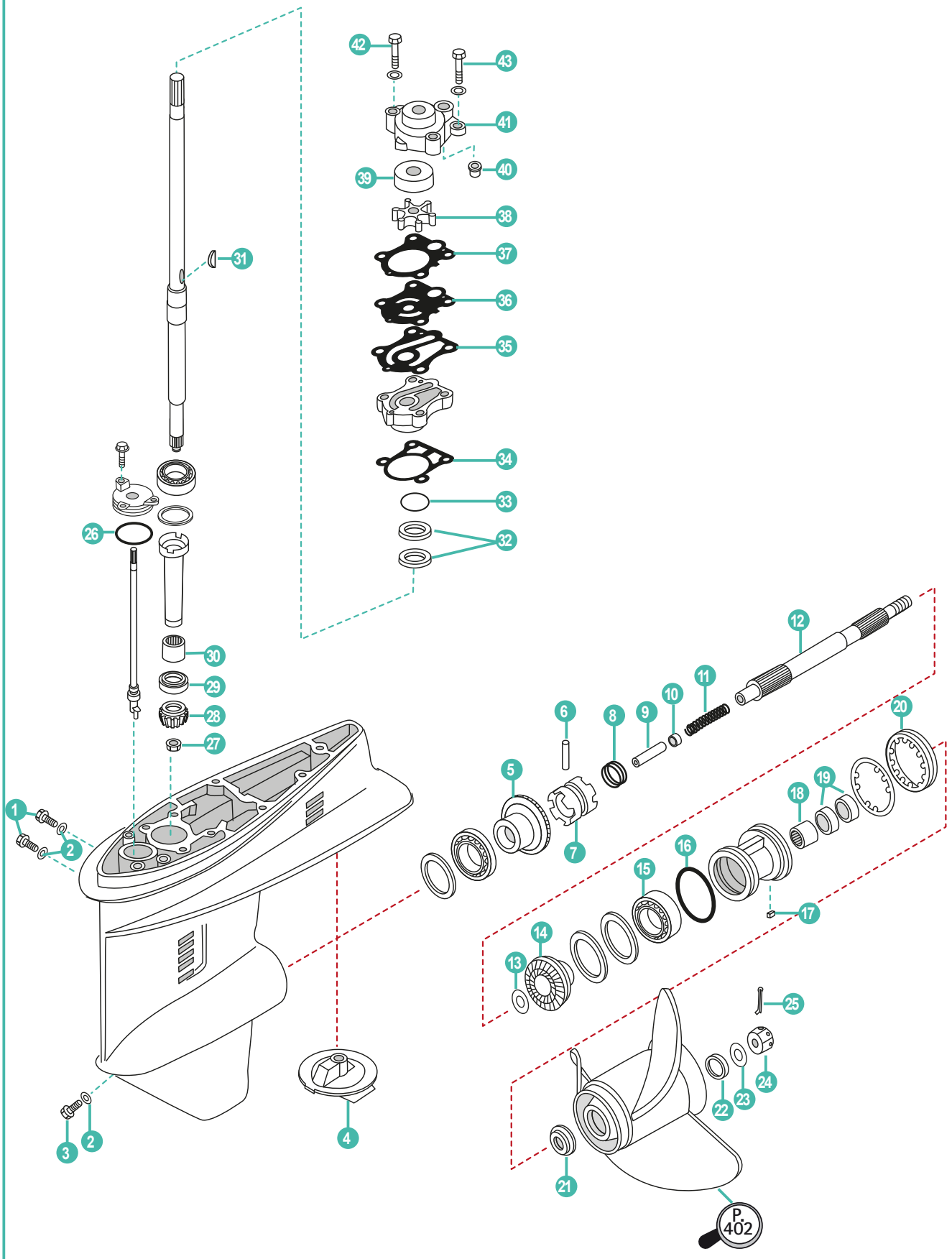
42
43
41
39
40
38
37
36
35
34
33
32
31
26
30
29
28
27
1
2
3
2
4
12
11
10
9
8
6
5
7
20
19
18
16
15
17
14
13
25
24
23
22
21
P. 402

	REF	OEM				
1	REC90340-08002	90340-08014	TORNILLO	BOLT	VITE	VIS
2	REC90430-08020	90430-08020	JUNTA	GASKET	GUARNIZIONE	JOINT
3	REC688-45341-00	688-45341-00	TAPÓN DRENAJE	PLUG	TAPPO	BOUCHON DE VIDANGE
4	CM664-45371-01	664-45371-01	ÁNODO	ANODE	ANODO	ANODE
5	REC6H4-45560-00	6H4-45560-00	PIÑÓN MARCHA AVANTE	POSITIVE GEAR ASSY	PIGNONE MARCIA AVANTI	PIGNON DE MARCHE AVANT
6	REC90250-06023	90250-06023	PASADOR	PIN	SPINOTTO	PIN
7	REC663-45631-00	663-45631-01	DESPLAZABLE	CLUTCH	SCORREVOLE	CRABOT
8	REC663-45633-00	663-45633-00	ARO	SPING	O-RING	JOINT TORIQUE
9	REC676-45635-00	676-45635-00	PIVOTE	PIN	SPINOTTO	PIVOT
10	REC663-45634-00	663-45634-00	CASQUILLO	SLIDE	BOCCOLA	DOUILLE
11	REC90501-16M01	90501-16M01	MUELLE	SPRING	MOLLA	RESSORT
12	REC679-45611-00	679-45611-01	EJE HÉLICE	SHAFT PROPELLER	ASSE ELICA	ARBRE D'HELICE
13	REC90201-22429	90201-22429	ARANDELA	WASHER	RONDELLA	RONDELLE
14	REC6H4-45570-00	6H4-45571-00	PIÑÓN MARCHA ATRÁS	REVERSE GEAR	PIGNONE MARCIA INDIETRO	PIGNON MARCHE ARRIÈRE
15	REC93306-00702	93306-00702	RODAMIENTO BOLAS	BEARING	CUSCINETTO	ROULEMENT
16	REC93210-66M98	93210-66M98	ARO	O-RING	O-RING	JOINT TORIQUE
17	REC90282-04010	90282-04010	CHAVETA	KEY	CHIAVETTA	CLAVETTE
18	REC93317-22204	93317-22204	COJINETE AGUJAS	CILINDRIC BEARING	CUSCINETTO	ROULEMENT
19	REC93101-22067	93101-22067	RETÉN ACEITE	OIL SEAL	PARAOLIO	JOINT SPI
20	REC697-45384-00	697-45384-00	TUERCA	NUT	DADO	ÉCROU
21	REC663-45987-00	663-45987-02	ESPACIADOR	SPACER	DISTANZIALE	ENTRETOISE
22	REC670-45997-00	670-45997-02	ESPACIADOR	SPACER	DISTANZIALE	ENTRETOISE
23	REC92990-16200	92990-16200	ARANDELA	WASHER	RONDELLA	RONDELLE
24	REC90171-16011	90171-16011	TUERCA	NUT	DADO	ÉCROU D'HELICE
25	REC91490-30030	91490-30030	PASADOR	PIN COTTER	SPINOTTO	CLAVETTE
26	REC93210-49046	93210-49046	ARO PLATO	O-RING	O-RING	JOINT TORIQUE
27	REC90170-12138	90170-12138	TUERCA	NUT	DADO	ÉCROU
28	REC6H4-45551-00	6H4-45551-00	PIÑÓN ATAQUE	INITIATIVE GEAR	MARCIA INIZIATIVA	PIGNON D'ATTAQUE
29	REC663-45552-00	663-45552-00	COJINETE (-1998)	BEARING (-1998)	CUSCINETTO (-1998)	ROULEMENT (-1998)
30	REC93315-32224	93315-32224	RODAMIENTO AGUJAS	BEARING	CUSCINETTO	ROULEMENT
31	REC90280-03024	90280-03024	CHAVETA	KEY	CHIAVETTA	CLAVETTE
32	REC93101-23070	93101-23070	RETÉN ACEITE	OIL SEAL	PARAOLIO	JOINT SPI
33	REC93210-41042	93210-41042	ARO, BASE BOMBA	O-RING	O-RING	JOINT TORIQUE
34	REC663-44316-A0	663-44316-A0	JUNTA BASE	GASKET	GUARNIZIONE	JOINT
35	REC663-44324-00	663-44324-A0	JUNTA	GASKET	GUARNIZIONE	JOINT
36	REC663-44323-00	663-44323-00	TAPA	OUTTER PLATE	TAPPO	PLAQUE DE POMPE À EAU
37	REC663-44315-A0	663-44315-A0	JUNTA	GASKET	GUARNIZIONE	JOINT
38	REC6H4-44352-02	6H4-44352-02	IMPULSOR	IMPELLER	GIRANTE	TURBINE
39	REC663-44322-00	663-44322-00	CASQUILLO	INSERT CARTRIDGE	BOCCOLA	INSERT DE POMPE À EAU
40	REC663-44366-00	663-44366-00	RETÉN	SEAL	TENUTA	JOINT SPI
41	REC663-44311-02	663-44311-02	CUERPO BOMBA AGUA	HOUSING WATER P.	CORPO POMPA ACQUA	CORPS DE POMPE À EAU
42	REC97095-08045	97395-08045	TORNILLO	BOLT	VITE	VIS
43	REC97095-08055	97395-08055	TORNILLO	BOLT	VITE	VIS

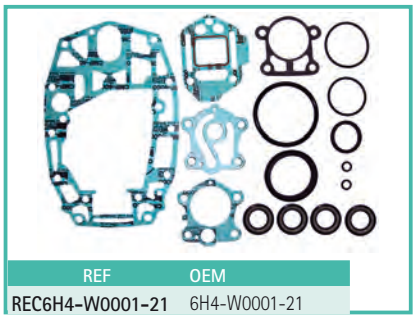

REF	OEM
REC6H4-W0001-21	6H4-W0001-21

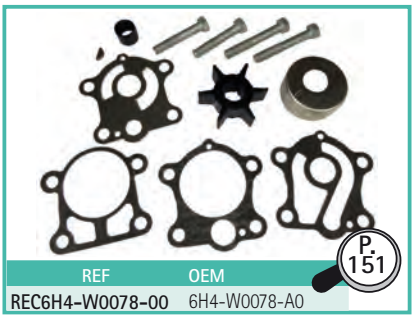

P. 151

REF	OEM
REC6H4-W0078-00	6H4-W0078-A0



REF
REC80W90U3
REC80W90U6
RECGREU1
RECGREU12

P. 43

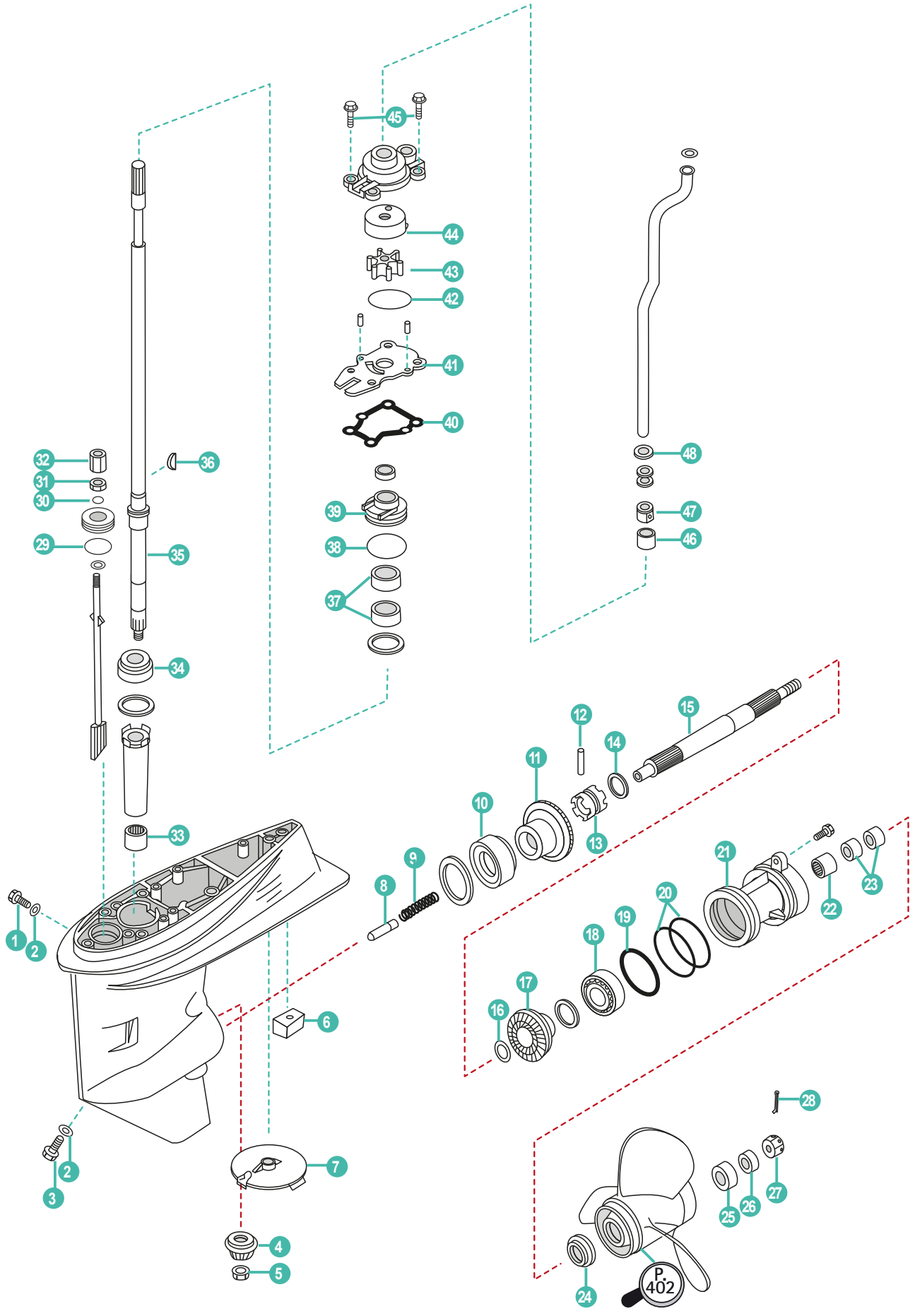
1
2
3
4
5
6
7
8
9
10
11
12
13
14
15
16
17
18
19
20
21
22
23
24
25
26
27
28
29
30
31
32
33
34
35
36
37
38
39
40
41
42
43
44
45
46
47
48
P. 402

	REF	OEM				
1	REC90340-08002	90340-08002	TAPÓN	PLUG	TAPPO	BOUCHON DE VIDANGE
2	REC90430-08020	90430-08020	JUNTA	GASKET	GUARNIZIONE	JOINT
3	REC688-45341-00	688-45341-10	TAPÓN	PLUG	TAPPO	BOUCHON DE VIDANGE
4	REC66T-45551-00	66T-45551-00	PIÑÓN ATAQUE	INITIATIVE GEAR	MARCIA INIZIATIVA	PIGNON D'ATTAQUE
5	REC90170-12138	90170-12138	TUERCA	NUT	DADO	ECROU
6	CM67C-45251-00	67C-45251-00	ÁNODO	ANODE	ANODO	ANODE
7	CM664-45371-01	664-45371-01	ÁNODO DERIVA	TAB-TRIM	ANODO	ANODE
8	REC66T-45635-00	66T-45635-00	BULÓN	PLUNGER	BULLONE	BOULON
9	PAT40-04050002	90501-15M01	RESORTE	SPRING	MOLLA	RESSORT
10	REC93332-00003	93332-00003	RODAMIENTO	BEARING	CUSCINETTO	ROULEMENT
11	REC66T-45560-00	66T-45560-01	PIÑÓN MARCHA AVANTE	POSITIVE GEAR ASSY	PIGNONE MARCIA AVANTI	PIGNON DE MARCHE AVANT
12	REC90250-06023	90250-06023	PASADOR	PIN	SPINOTTO	PIN
13	REC66T-45631-00	66T-45631-00	SELECTOR	CLUTCH, DOG	SELETTORE	CRABOT
14	REC663-45633-00	663-45633-00	ANILLO	RING	O-RING	JOINT TORIQUE
15	REC66T-45611-00	66T-45611-00	EJE HÉLICE	SHAFT	ASSE ELICA	ARBRE D'HELICE
16	REC90201-22429	90201-22429	ARANDELA	WASHER	RONDELLA	RONDELLE
17	REC66T-45571-00	66T-45571-00	PIÑÓN MARCHA ATRÁS	REVERSE GEAR	PIGNONE MARCIA INDIETRO	PIGNON MARCHE ARRIÈRE
18	REC93306-001U1	93306-001U1	RODAMIENTO	BEARING	CUSCINETTO	ROULEMENT
19	REC93210-69MG6	93210-69MG6	ANILLO TÓRICO	O-RING	O-RING	JOINT TORIQUE
20	REC93210-74MG5	93210-74MG5	ANILLO TÓRICO	O-RING	O-RING	JOINT TORIQUE
21	REC63D-45361-02-4D	63D-45361-02-4D	DIÁVOLO	CAP	COP. CASSA INGRANAGGI	DIABOLO
22	REC93317-22204	93317-22204	RODAMIENTO	BEARING	CUSCINETTO	ROULEMENT
23	REC93101-22M00	93101-22M00	RETÉN	OIL SEAL	PARAOLIO	JOINT SPI
24	REC663-45987-00	663-45987-02	ESPACIADOR	SPACER	DISTANZIALE	ENTRETOISE
25	REC66T-45997-00	66T-45997-00	ESPACIADOR	SPACER	DISTANZIALE	ENTRETOISE
26	REC90389-22M01	90389-22M01	CASQUILLO GRUESO	BUSH	BOCCOLA	RONDELLE D 'HELICE
27	REC90171-16011	90171-16011	TUERCA HÉLICE	NUT, CASTLE	DADO	ECROU D'HELICE
28	REC91490-30025	91490-30025	PASADOR ALETAS	PIN	SPINOTTO	CLAVETTE
29	REC93210-33MG4	93210-33MG4	ARILLO TÓRICO	O-RING	O-RING	JOINT TORIQUE
30	REC93210-06ME6	93210-06ME6	ARILLO TÓRICO	O-RING	O-RING	JOINT TORIQUE
31	REC95380-06700	95380-06700	TUERCA	NUT	DADO	ECROU
32	REC61N-44146-00	61N-44146-00	CONECTOR	CONNECTOR	RACCORDO	CONNECTEUR
33	REC93315-32224	93315-32224	RODAMIENTO	BEARING	CUSCINETTO	ROULEMENT
34	REC93332-00001	93332-00001	RODAMIENTO	BEARING	CUSCINETTO	ROULEMENT
35	REC66T-45501-01 REC66T-45501-10	66T-45501-01 66T-45501-11	EJE VERTICAL **S** EJE VERTICAL **L**	DRIVE SHAFT ASSY **S** DRIVE SHAFT ASSY **L**	ASSE VERTICALE **S** ASSE VERTICALE **L**	ARBRE VERTICAL **S** ARBRE VERTICAL **L**
36	REC90280-03M03	90280-03M03	CHAVETA	KEY	CHIAVETTA	CLAVETTE
37	REC93101-22M60	93101-22M60	RETÉN	OIL SEAL	PARAOLIO	JOINT SPI
38	REC93210-48MG8	93210-48MG8	ARILLO TÓRICO	O-RING	O-RING	JOINT TORIQUE
39	REC63D-44341-00	63D-44341-00	CUERPO	HOUSING	CORPO	LOGEMENT
40	REC63D-44316-00	63D-44316-00	JUNTA	GASKET, WATER PUMP	GUARNIZIONE	JOINT
41	REC66T-44323-00	66T-44323-00	PLATO	OUTTER PLATE	PIASTRA	PLAQUE DE POMPE À EAU
42	REC93210-59MG7	93210-59MG7	ARILLO TÓRICO	O-RING	O-RING	JOINT TORIQUE
43	REC6H4-44352-02	6H4-44352-02	TURBINA	IMPELLER	GIRANTE	TURBINE
44	REC63D-44322-00	63D-44322-00	CASQUILLO	INSERT	BOCCOLA	INSERT DE POMPE À EAU
45	REC90119-08M15	90119-08M15	TORNILLO	BOLT	VITE	BOULON
46	REC663-44366-00	663-44366-00	CASQUILLO	DAMPER	BOCCOLA	DOUILLE
47	REC63D-44312-00	63D-44312-00	TAPA	COVER	COPERCHIO	BAGUE
48	REC90430-12072	90430-12072	JUNTA	GASKET	GUARNIZIONE	JOINT

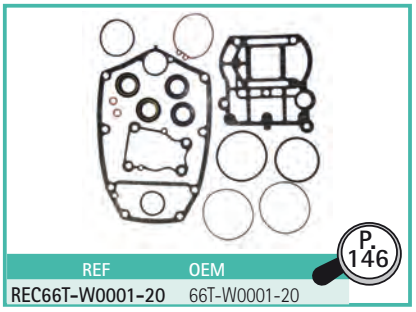

REF	OEM
REC66T-W0001-20	66T-W0001-20

P. 146

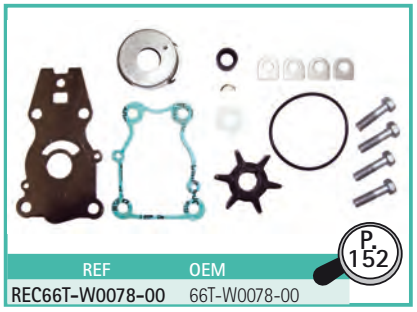

REF	OEM
REC66T-W0078-00	66T-W0078-00

P. 152



REF
REC80W90U3
REC80W90U6
RECGREU1
RECGREU12

P. 43

2T STROKES E40GMH • 40GWH

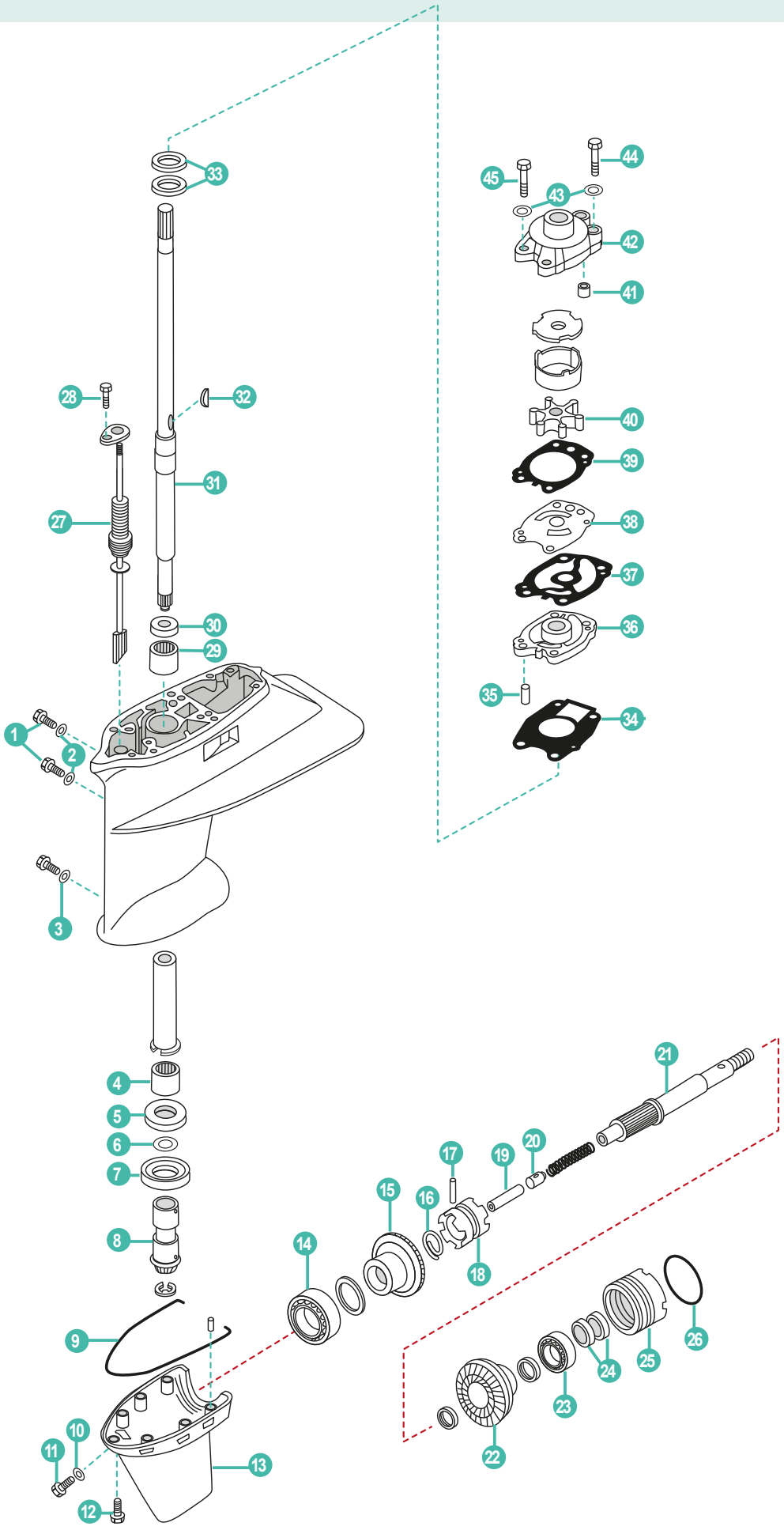

	REF	OEM				
1	REC90340-08002	90340-08002	TORNILLO, DRENAJE	BOLT DRAIN	VITE	BOUCHON DE VIDANGE
2	REC90430-08020	90430-08020	JUNTA	GASKET	GUARNIZIONE	JOINT
3	REC90430-06M03	90430-06M03	JUNTA	GASKET	GUARNIZIONE	JOINT
4	REC93315-324U1	93315-324U1	COJINETE DE RODILLOS	BEARING	CUSCINETTO	ROULEMENT
5	REC93342-624U0	93342-624U0	COJINETE CON RODAMIENTOS	BEARING	CUSCINETTO	ROULEMENT
6	REC676-45587-00 REC676-45587-00-75 REC676-45587-00-80	676-45587-00-70 676-45587-00-75 676-45587-00-80	GRUESO GRUESO GRUESO	SHIM (t:0.070mm) SHIM (t:0.075mm) SHIM (t:0.080mm)	SPESSORE SPESSORE SPESSORE	CALE (0.070mm) CALE (0.075mm) CALE (0.080mm)
7	REC93390-000U0	93390-000U0	COJINETE DE RODILLOS	BEARING	CUSCINETTO	ROULEMENT
8	REC6F5-45551-00	6F5-45551-00	PIÑÓN	PINION (13T)	PIGNONE	PIGON (13D)
9	REC676-45314-00	676-45314-00	SELLO DE FUNDA INFERIOR	SEAL	BOCCOLA COPERCHIO INFERIORE	JOINT DE CARTER INFERIEUR
10	REC90430-08020	90430-08020	JUNTA	GASKET	GUARNIZIONE	JOINT
11	REC688-45341-00	688-45341-10	TAPÓN, DREN	BOLT DRAIN	TAPPO	BOUCHON DE VIDANGE
12	REC90105-06M01	90105-06M01	TORNILLO	BOLT	VITE	VIS
13	REC6F5-45312-00-4D	6F5-45312-01-4D	FUNDA INFERIOR	CASING	COPERCHIO INFERIORE	CARTER INFERIEUR
14	REC93332-000U0	93332-000U0	COJINETE	BEARING	CUSCINETTO	ROULEMENT
15	REC6F5-45560-00	6F5-45560-00	PIÑÓN MARCHA AVANTE	POSITIVE GEAR ASSY	PIGNONE MARCIA AVANTI	PIGNON DE MARCHE AVANT
16	REC663-45633-00	663-45633-00	ANILLO DE PASADOR	RING, CROSS PIN	O-RING	JOINT TORIQUE
17	REC90250-06023	90250-06023	PASADOR CILÍNDRICO	PIN, STRAIGHT	SPINOTTO	PIN
18	REC663-45631-00	663-45631-01	EMBRAGUE DE GARRA	CLUTCH DOG	GIUNTO A DENTI FRONTALI	CRABOT
19	REC676-45635-00	676-45635-00	ÉMBOLO DE CAMBIO	PLUNGER SHIFT	CAMBIO PISTONE	PISTON
20	REC663-45634-00	663-45634-00	DESLIZADOR, CAMBIO	SLIDE SHIFT	SCORREVOLE	DOUILLE
21	REC6F6-45611-00	6F6-45611-00	EJE PROPULSOR	SHAFT PROPELLER	ASSE GIRANTE	ARBRE D'HELICE
22	REC6F5-45570-00	6F5-45570-00	ENGRANAJE COMPL 2.	GEAR	INGRANAGGIO	PIGNON
23	REC93306-204Y7	93306-20401	COJINETE (B6204)	BEARING	CUSCINETTO	ROULEMENT
24	REC93101-20048	93101-20048	SELLO ACEITE	OIL SEAL	PARAOLIO	JOINT SPI
25	REC676-45361-00	676-45361-01-94	FUNDA INFERIOR	CAP LOWER CASING	COPERCHIO INFERIORE	DIABOLO
26	REC93210-57M00	93210-57M00	ARO TÓRICO	O-RING	O-RING	JOINT TORIQUE
27	REC650-44147-00	650-44147-00	HULE DE VARILLA	BOOT, SHIFT ROD	AVVIO, BARRA DI SPOSTAMENTO	GUIDE
28	PAGB/T5783-M6X10	97095-06010	PERNO	BOLT	VITE	VIS
29	REC93315-217U0	93315-217U0	COJINETE DE RODILLOS	BEARING	CUSCINETTO	ROULEMENT
30	REC676-45533-00	676-45533-00	ARANDELA DE EMPUJE AXIAL	WASHER	RONDELLA	RONDELLE
31	REC676-45501-10	676-45501-10	EJE DE MANDO COMPL.	DRIVE SHAFT	ASSE VERTICALE	ARBRE VERTICAL
32	REC90280-04M00	90280-04M00	CUNA WOODRUFF	KEY WOODRUFF	CHIAVE WOODRUFF	CLAVETTE
33	REC93101-22M00	93101-22M00	SELLO ACEITE	OIL SEAL	PARAOLIO	JOINT SPI
34	REC676-44316-A1	676-44316-A1	EMPAQUE	GASKET	GUARNIZIONE	JOINT
35	PAF25-04000007	93604-08062	PASADOR DE CLAVIJA	PIN, DOWEL	SPINOTTO	CLAVETTE
36	REC676-44341-00	676-44341-94	CAJA BOMBA DE AGUA	HOUSING WATER PUMP	ALLOGGIAMENTO POMPA ACQUA	BASE DE POMPE À EAU
37	REC676-44324-A0	676-44324-A1	EMPAQUE	GASKET	GUARNIZIONE	JOINT
38	REC676-44323-00-40	676-44323-40	PLACA EXTERIOR DEL CARTUCHO	PLATE	PIASTRA	PLAQUE DE POMPE À EAU
39	REC676-44315-00	676-44315-A1	EMPAQUE	GASKET	GUARNIZIONE	JOINT
40	REC6F5-44352-00	6F5-44352-00	IMPULSOR	IMPELLER	GIRANTE	TURBINE
41	REC663-44366-00	663-44366-00	GOMA DEL SELLO DE AGUA	DAMPER WATER SEAL	BOCCOLA GOMMA ACQUA	BAGUE
42	REC676-44311-00	676-44311-00	CAJA BOMBA AGUA	HOUSING WATER PUMP	ALLOGGIAMENTO POMPA ACQUA	CORPS DE POMPE À EAU
43	PAGB/T97.1-8	92995-08600	ARANDELA	WASHER	RONDELLA	RONDELLE
44	REC97095-08055	97095-08055	PERNO	BOLT	VITE	VIS
45	REC97095-08045	97095-08045	PERNO	BOLT	VITE	VIS



P. 151

REF	OEM
REC6F5-W0078-A0	6F5-W0078-A0

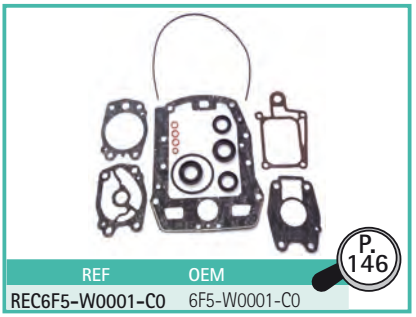

P. 146

REF	OEM
REC6F5-W0001-C0	6F5-W0001-C0



P. 43

REF
REC80W90U3
REC80W90U6
RECGREU1
RECGREU12

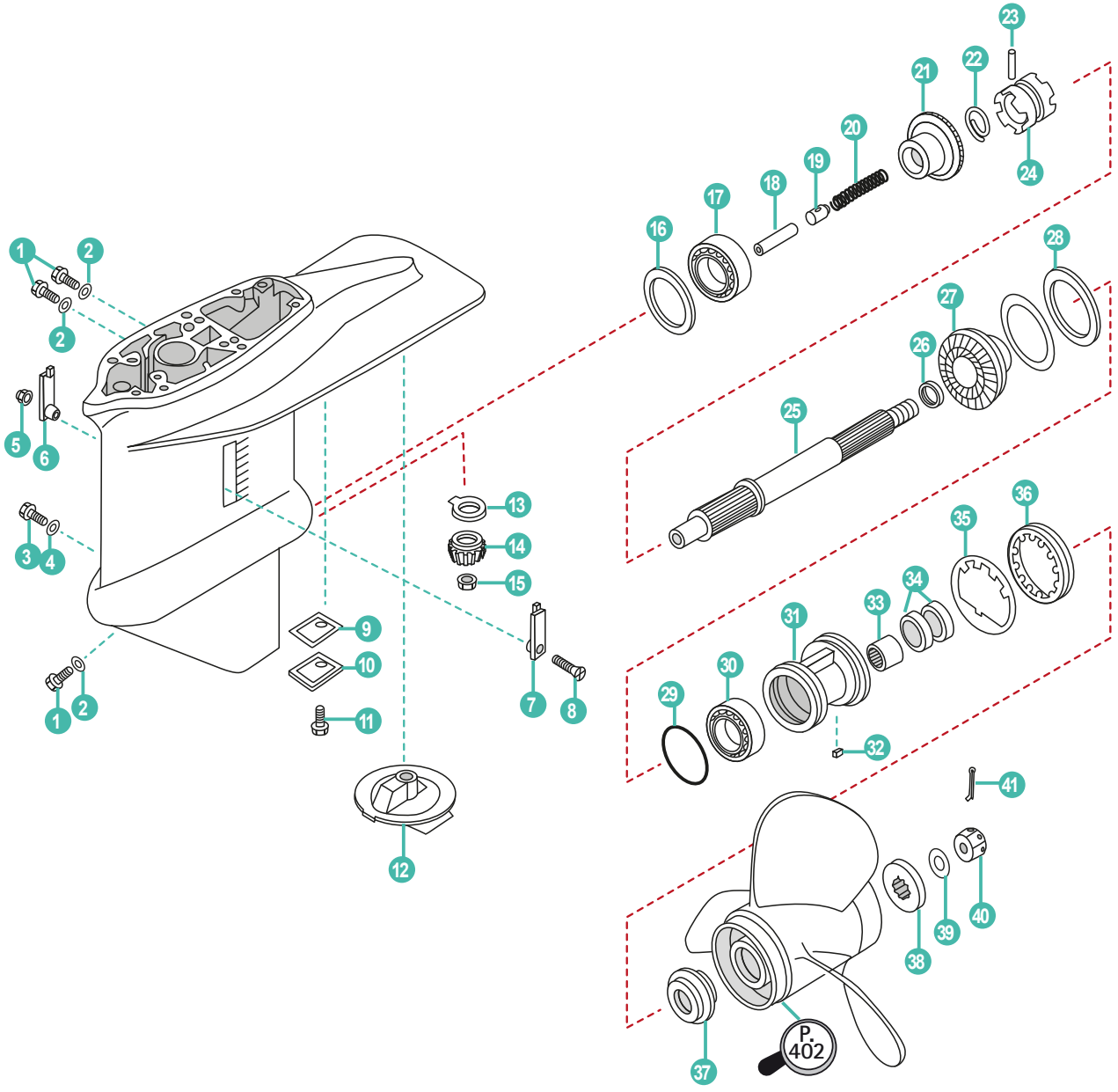
1
2
2
5
6
3
4
1
2
9
10
11
12
13
14
15
7
8
23
21
22
24
20
19
18
17
16
28
27
26
25
36
35
34
33
31
30
29
32
41
40
39
38
37
P. 402

	REF	OEM				
1	REC90340-08002	90340-08M14	TORNILLO NIVEL ACEITE	VENT PLUG	VITE LIVELLO OLIO	BOUCHON DE VIDANGE
2	REC90430-08020	90430-08020	ARANDELA	WASHER	RONDELLA	RONDELLE
3	REC90149-06M00	90149-06M00	TORNILLO DRENAJE	DRAIN SCREW	VITE DRENAGGIO	BOUCHON DE VIDANGE
4	REC90430-06M03	90430-06M03	JUNTA	GASKET	GUARNIZIONE	JOINT
5	PAGB/T889.1-M5		TUERCA	NUT	DADO	ÉCROU
6	REC688-45215-02	688-45215-02	TAPA ENTRADA DE AGUA	WATER SCREEN	COPERCHIO RAFFREDDAMENTO	GRILLE D'ENTREE D'EAU
7	REC688-45214-02	688-45214-02	TAPA ENTRADA DE AGUA	WATER SCREEN	COPERCHIO RAFFREDDAMENTO	GRILLE D'ENTREE D'EAU
8	PAGB/T820-M5X30		TORNILLO	SCREW	VITE	VIS
9	REC679-45315-A1	679-45315-A1	JUNTA	GASKET	GUARNIZIONE	JOINT
10	REC679-45321-02	679-45321-02	PLACA	PLATE	PIASTRA	PLAQUE
11	PAGB/T818-M6X16	98580-06016	TORNILLO	SCREW	VITE	VIS
12	TEN01101	679-45371-00	ÁNODO	ANODE	ANODO	ANODE
13	REC663-45552-00	663-45552-00	COJINETE PLANO	BEARING	CUSCINETTO	ROULEMENT
14	REC6H9-45551-00	6H9-45551-00	PIÑÓN ATAQUE	INITIATIVE GEAR	MARCIA INIZIATIVA	PIGNON D'ATTAQUE
15	REC90170-12138	90170-012138	TUERCA	NUT	DADO	ÉCROU
	PAT40-04000004-1	663-45567-01-10	GRUESO (0.10mm)	SHIM (0.10mm)	SPESSORE (0.10mm)	CALE (0.10mm)
16	PAT40-04000004-2	663-45567-01-12	GRUESO (0.12mm)	SHIM (0.12mm)	SPESSORE (0.12mm)	CALE (0.12mm)
	PAT40-04000004-3	663-45567-01-15	GRUESO (0.15mm)	SHIM (0.15mm)	SPESSORE (0.15mm)	CALE (0.15mm)
	PAT40-04000004-5	663-45567-01-30	GRUESO (0.30mm)	SHIM (0.30mm)	SPESSORE (0.30mm)	CALE (0.30mm)
17	REC93332-00003	93332-00003	COJINETE	BEARING	CUSCINETTO	ROULEMENT
18	REC676-45635-00	676-45635-00	ÉMBOLO DE CAMBIO	PIVOT	PERNO	PIVOT
19	REC663-45634-00	663-45634-00	DESLIZADOR DE CAMBIO	CLUTCH DOG	TRAINABILE CAMBIO	PISTON
20	REC90501-16M01	90501-16M01	RESORTE DE COMPRESIÓN	SPRING	MOLLA	RESSORT
21	REC679-45560-00	679-45560-00	PIÑÓN MARCHA AVANTE	POSITIVE GEAR ASSY	PIGNONE MARCIA AVANTI	PIGNON DE MARCHE AVANT
22	REC663-45633-00	663-45633-00	ANILLO DEL PASADOR	ANNULAR SPRING, CLUTCH	ANELLO	RESSORT
23	REC90250-06023	90250-06023	PASADOR	PIN	FERMO	GOUPILLE
24	REC663-45631-00	663-45631-01	EMBRAGUE DE GARRA	CLUCH DOG	SELETTORE	CRABOT
25	REC679-45611-00	679-45611-01	EJE PROPULSOR	PROPELLER SHAFT	ASSE ELICA	ARBRE D'HELICE
26	REC90201-22429	90201-22429	ARANDELA PLANA	WASHER	RONDELLA	RONDELLE
27	REC679-45571-00	679-45571-00	PIÑÓN MARCHA ATRÁS	REVERSE GEAR	PIGNONE MARCIA INDIETRO	PIGNON MARCHE ARRIÈRE
28	REC663-45576-00	663-455576-00	ARANDELA DE EMPUJE	PUSH WASHER	RONDELLA DI SPINTA	RONDELLE D'APPUI
29	REC93210-66M98	93210-66M98	O-RING	O-RING	O-RING	JOINT TORIQUE
30	REC93306-00702	93306-00702	COJINETE	BEARING	CUSCINETTO	ROULEMENT
31	REC679-45331-00	679-45331-00-94	DIABOLO	DIABOLO	DIAVOLO	DIABOLO
32	REC90282-04010	902082-04010	CHAVETA	KEY	CHIAVETTE	CLAVETTE
33	REC93317-22204	93317-22204	COJINETE	BEARING	CUSCINETTO	ROULEMENT
34	REC93101-22067	93101-22067	RETÉN DE ACEITE	SEAL OIL	PAROLIO	JOINT SPI
35	REC90214-48M03	90214-48M03	ARANDELA	WASHER	RONDELLA	RONDELLE
36	REC697-45384-00	697-45384-00	TUERCA	NUT	DADO	ÉCROU
37	REC663-45987-00	663-45987-00	ESPACIADOR	DISTANCE WASHER	DISTANZIALE	ENTRETOISE
38	REC66T-45997-00	66T-45997-00	ESPACIADOR	DISTANCE WASHER	DISTANZIALE	ENTRETOISE
39	REC90389-22M01	90389-22M01	ARANDELA	WASHER	RONDELLA	RONDELLE
40	REC90171-16011	90171-16011	TUERCA	NUT	DADO	ÉCROU D'HELICE
41	REC91490-30025	91490-30025	CLIP	CLIP	CLIP	GOUPILLE

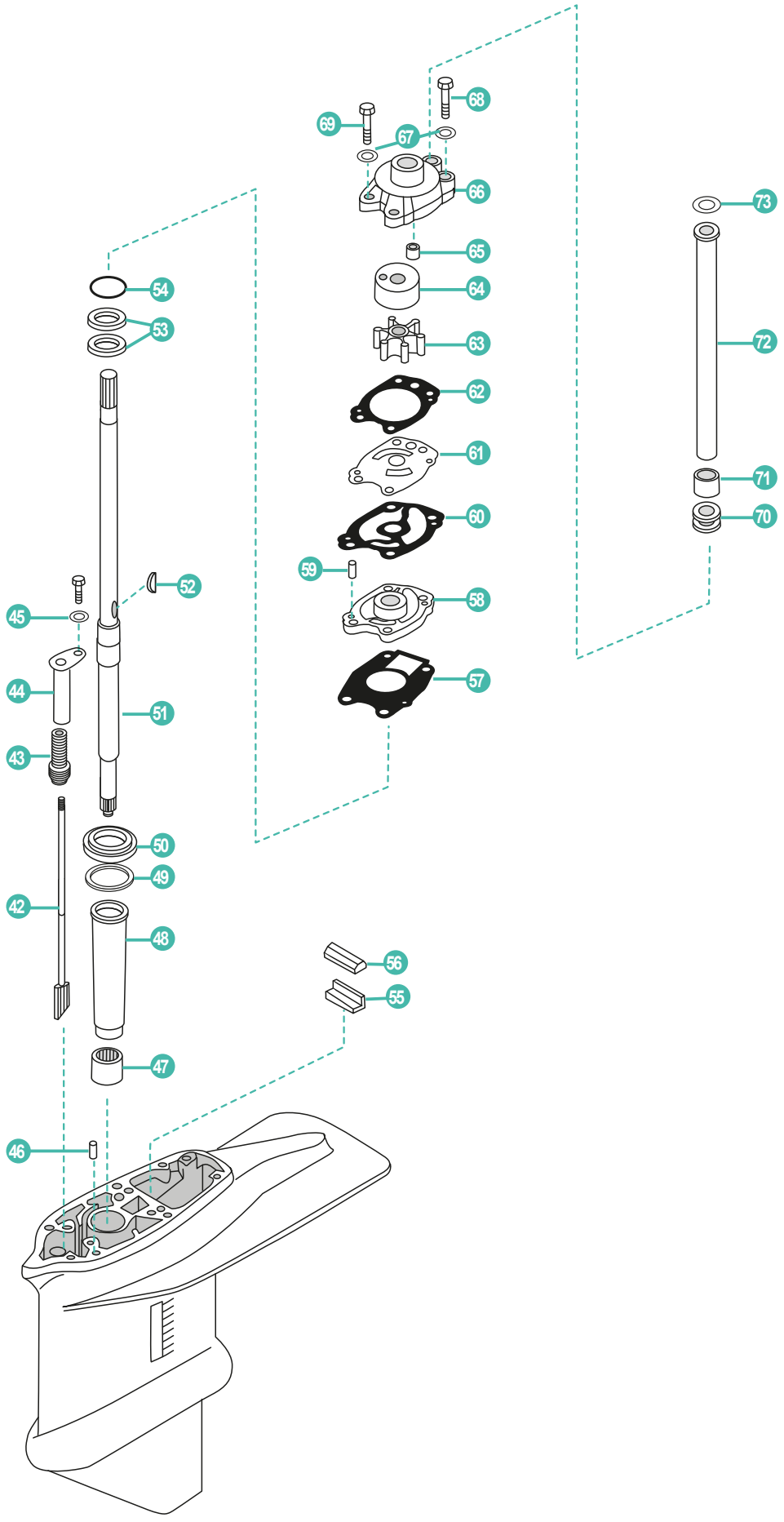
68
69
67
66
73
65
54
64
53
63
72
62
61
71
60
70
59
58
52
57
45
44
51
43
50
49
42
48
56
55
47
46

	REF	OEM				
42	REC679-44150-10	679-44150-10	EJE SELECTOR L	SHAFT SELECTOR L	ASSE SELETTORE L	ARBRE SELECTEUR L
	REC679-44150-00	679-44150-00	EJE SELECTOR S	SHAFT SELECTOR S	ASSE SELETTORE S	ARBRE SELECTEUR S
43	REC650-44147-00	650-44147-00	FUELLE EJE	BOOT, SHIFT ROD	BOOT, SHIFT ROD	SOUFFLET
44	REC679-44152-00	679-44152-00	BUJE LEVE DE CAMBIO	HUBE GEAR LEVE	MOZZO LEVA CAMBIO	LEVIER DE VITESSE
45	PAGB/T97.1-6	92990-06600	ARANDELA PLANA	WASHER	RONDELLA	RONDELLE
46	REC93606-12019	93606-12019	PIN CENTRADOR	PIN DOWEL	SPINOTTO DI CENTRAGGIO	CLAVETTE DE CENTRAGE
47	REC93315-32224	93315-32224	COJINETE	BEARING	CUSCINETTO	ROULEMENT
48	REC679-45536-00	679-45536-00	CAMISA EJE TRASMISION	BUSHING NYLON	CAMICIA ASSE TRASMISSIONE	AXE TRANSMISSION
	PAT40-04000003-1	663-45587-01-10	GRUESO (0.10mm)	SHIM (0.10mm)	SPESSORE (0.10mm)	CALE (0.10mm)
	PAT40-04000003-2	663-45587-01-12	GRUESO (0.12mm)	SHIM (0.12mm)	SPESSORE (0.12mm)	CALE (0.12mm)
	PAT40-04000003-3	663-45587-01-15	GRUESO (0.15mm)	SHIM (0.15mm)	SPESSORE (0.15mm)	CALE (0.15mm)
49	PAT40-04000003-4	663-45587-01-18	GRUESO (0.18mm)	SHIM (0.18mm)	SPESSORE (0.18mm)	CALE (0.18mm)
	PAT40-04000003-5	663-45587-01-30	GRUESO (0.30mm)	SHIM (0.30mm)	SPESSORE (0.30mm)	CALE (0.30mm)
	PAT40-04000003-6	663-45587-01-40	GRUESO (0.40mm)	SHIM (0.40mm)	SPESSORE (0.40mm)	CALE (0.40mm)
	PAT40-04000003-7	663-45587-01-50	GRUESO (0.50mm)	SHIM (0.50mm)	SPESSORE (0.50mm)	CALE (0.50mm)
50	PAT40-04000027	93332-00079	COJINETE	BEARING	CUSCINETTO	ROULEMENT
51	REC679-45501-10	679-45501-10	EJE L	SHAFT L	ASSE L	ARBRE L
52	REC90280-04M00	90280-04M00	CHAVETA	KEY	CHIAVETTA	CLAVETTE
53	REC93101-22067	93101-22067	RETÉN DE ACEITE	SEAL OIL	PARAOLIO	JOINT SPI
54	REC93210-41042	93210-41042	TÓRICA	O-RING	O-RING	JOINT TORIQUE
55	REC663-45376-00	663-45376-00	GUIA RETEN	GUIDE RUB. SEAL	GUIDA PARAOLIO	GUIDE
56	REC663-45375-00	663-45375-00	GOMA SELLADORA	SEALING RUBBER	ANELLO SIGILLANTE	JOINT CAOUTCHOUC
57	REC679-44316-A0	679-44316-A0	JUNTA	GASKET	GUARNIZIONE	JOINT
58	REC679-44341-00	679-44341-00-94	CAJA BOMBA DE AGUA	WATER PUMP HOUSING	SCATOLA POMPA ACQUA	BASE DE POMPE À EAU
59	PAF25-04000007	93604-08062	PASADOR	PIN	FERMO	GOUPILLE
60	REC676-44324-A0	676-44324-A0	JUNTA	GASKET	GUARNIZIONE	JOINT
61	REC676-44323-00-40	676-44323-00	PLACA EXTERIOR DEL CARTUCHO	OUTER PLATE	PLACCA ESTERNA	PLAQUE DE POMPE À EAU
62	REC676-44315-00	676-44315-A0	JUNTA	GASKET	GUARNIZIONE	JOINT
63	REC6F5-44352-00	6F5-44352-002	IMPULSOR	IMPELLER	GIRANTE	TURBINE
64	REC676-44322-00	676-44322-00	CASQUILLO INOX	CARTRIDGE INSERT	BOCCOLA	INSERT DE POMPE À EAU
65	REC663-44366-00	663-44366-00	RETEN TUBO AGUA	DAMPER, WATER SEAL	GHIERA	JOINT DE TUBE D'EAU
66	REC676-44311-00	676-44311-00	CAJA BOMBA DE AGUA	WATER PUMP HOUSING	SCATOLA POMPA ACQUA	CORPS DE POMPE À EAU
67	PAGB/T97.1-8	92990-08600	ARANDELA PLANA	WASHER	RONDELLA	RONDELLE
68	REC97095-08055	97095-08055	PERNO	BOLT	BOULONE	BOULON
69	REC97095-08045	97095-08045	PERNO	BOLT	BOULONE	BOULON
70	PAT40-02000002	663-44367-00	GOMA DEL SELLO DE AGUA	GUIDE BUSHING, WATER PIPE	GUARNIZIONE	GUIDE DE PIPE D'EAU
71	REC90430-12072	90430-12072	JUNTA	GASKET	GUARNIZIONE	JOINT
72	REC676-44361-00	676-44361-00	TUBO S	TUBE S	TUBO S	TUBE S
	REC676-44361-10	676-44361-10	TUBO L	TUBE L	TUBO L	TUBE L
73	PAF25-02000019	90202-12060	GOMA DEL SELLO DE AGUA	GUIDE BUSHING, WATER PIPE	GUARNIZIONE	GUIDE DE PIPE D'EAU



2T STROKES 55ED • 55ET • 55B/BM/BT

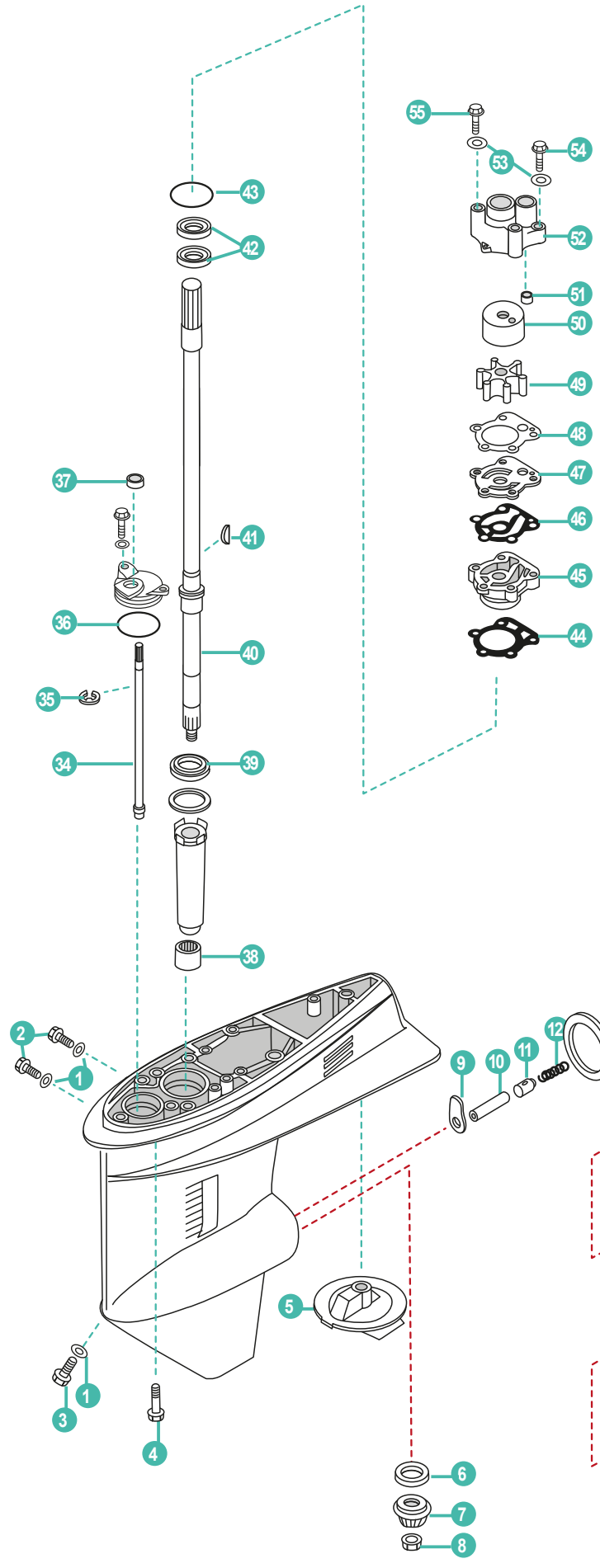

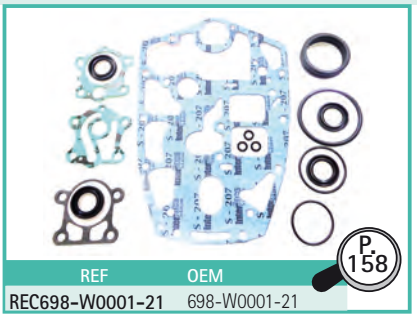

REF	OEM
REC698-W0001-21	698-W0001-21

P. 158

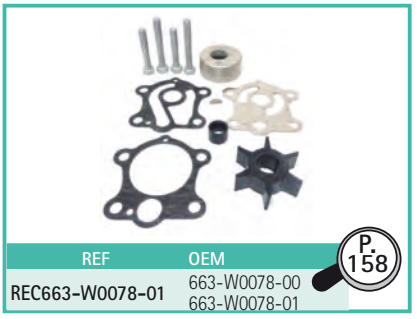

REF	OEM
REC663-W0078-01	663-W0078-00 663-W0078-01

P. 158



REF
REC80W90U3
REC80W90U6
RECGREU1
RECGREU12

P. 158

P. 402

	REF	OEM				
1	REC90430-08020	90430-08020	JUNTA	GASKET	GUARNIZIONE	JOINT
2	REC90340-08002	90340-08002	TORNILLO	STRAIGHT SCREW	VITE	VIS
3	REC688-45341-00	688-45341-10	TAPÓN, DREN	PLUG, DRAIN	TAPPO	BOUCHON DE VIDANGE
4	REC97075-10040	97075-10040	PERNO	BOLT	PERNO	BOULON
5	TEN01101	679-45371-00	ÁNODO	ANODE	ANODO	ANODE
6	REC663-45552-00	663-45552-00	COJINETE PLANO	BEARING, PLAIN	CUSCINETTO PIATO	ROULEMENT
7	REC697-45551-00	697-45551-00	PIÑÓN ATAQUE	INITIATIVE GEAR	MARCIA INIZIATIVA	PIGNON D'ATTAQUE
8	REC90170-12138	90170-12138	TUERCA	NUT	DADO	ÉCROU
9	REC663-44151-00	663-44151-00	LEVA DE CAMBIO	CAM SHIFT	ALBERO	CAME
10	REC688-45635-00	688-45635-00	PLUNGER, SHIFT	ÉMBOLO DE CAMBIO	CAMBIO PISTONE	PISTON
11	REC663-45634-00	663-45634-00	DESLIZADOR CAMBIO	SLIDE, SHIFT	SCORREVOLE	DOUILLE
12	REC90501-16233	90501-16233	RESORTE DE COMPRESIÓN	SPRING	MOLLA	RESSORT
13	REC93332-00003	93332-00003	COJINETE	BEARING	CUSCINETTO	ROULEMENT
14	REC697-45560-00	697-45560-00	PIÑÓN MARCHA AVANTE	POSITIVE GEAR ASSY	PIGNONE MARCIA AVANTI	PIGNON DE MARCHE AVANT
15	REC663-45631-00	663-45631-01	EMBRAGUE DE GARRA	CLUTCH, DOG	GIUNTO A DENTI FRONTALE	CRABOT
16	REC90250-06023	90250-06023	PASADOR CILÍNDRICO	PIN, STRAIGHT	SPINOTTO	PIN
17	REC663-45633-00	663-45633-00	ANILLO DE PASADOR	RING, CROSS PIN	O-RING	JOINT TORIQUE
18	REC697-45611-00	697-45611-00	EJE PROPULSOR	SHAFT PROPELLER	ASSE	ARBRE D'HELICE
19	REC90201-22429	90201-22429	ARANDELA PLANA	WASHER, PLATE	RONDELLA	RONDELLE
20	REC697-45570-00	697-45571-00	PIÑÓN MARCHA ATRÁS	REVERSE GEAR	PIGNONE MARCIA INDIETRO	PIGNON MARCHE ARRIÈRE
21	REC93306-00702	93306-00702	COJINETE	BEARING	CUSCINETTO	ROULEMENT
22	REC93210-66M98	93210-66M98	ANILLO O	O- RING	O-RING	JOINT TORIQUE
23	REC663-45331-00-94	663-45331-00-94	CAJA DE COJINETE	HOUSING, BEARING	SEDE CUSCINETTO	DIABOLO
24	REC90282-04010	90282-04010	CHAVETA	KEY, STRAIGHT	CHIAVETTA	CLAVETTE
25	REC93317-22204	93317-22204	COJINETE	BEARING	CUSCINETTO	ROULEMENT
26	REC93101-22067	93101-22067	SELLO ACEITE	OIL SEAL	PARAOLIO	JOINT SPI
27	REC90214-48M03	90214-48M03	ARANDELA	WASHER	RONDELLA	RONDELLE
28	REC697-45384-00	697-45384-00	TUERCA	NUT	DADO	ECROU
29	REC663-45987-00	663-45987-02	ESPACIADOR	SPACER	DISTANZIALE	ENTRETOISE
30	REC670-45997-00	670-45997-02	ESPACIADOR	SPACER	DISTANZIALE	ENTRETOISE
31	REC92990-16200	92990-16200	ARANDELA PLANA	WASHER, PLAIN	RONDELLA	RONDELLE
32	REC90171-16011	90171-16011	TUERCA ENTALLADA	NUT, CASTLE	DADO	ECROU D'HELICE
33	REC91490-40030	91490-40025	CHAVETA	PIN, COTTER	CHIAVETTA	GOUPILLE
34	REC663-44144-01	663-44144-01	VARILLA DE CAMBIO	ROD, SHIFT	ASTICELLA	LEVIER DE VITESSE
35	REC99001-08600-00	99001-08600	CLIP	CLIP	CLIP	CLAVETTE
36	REC93210-49046	93210-49046	ANILLO	O-RING	O-RING	JOINT TORIQUE
37	REC93106-09014	93106-09014	RETÉN DE ACEITE	OIL SEAL	PARAOLIO	JOINT SPI
38	REC93315-32224	93315-32224	COJINETE DE RODILLOS	BEARING	CUSCINETTO	ROULEMENT
39	REC93332-00001	93332-00001	COJINETE	BEARING	CUSCINETTO	ROULEMENT
40	REC663-45510-01	663-45510-01	EJE DE MANDO	DRIVE SHAFT ASSY	ASSE VERTICALE	ARBRE VERTICAL
41	REC90280-03M03	90280-03M03	CHAVETA	KEY, WOODRUFF	CHIAVE	CLAVETTE
42	REC93101-23070	93101-23070	SELLO ACEITE	OIL SEAL	PARAOLIO	JOINT SPI
43	REC93210-41042	93210-41042	ANILLO O	O-RING	O-RING	JOINT TORIQUE
44	REC663-44316-A0	663-44316-A0	EMPAQUE	GASKET, WATER PUMP	GUARNIZIONE	JOINT DE POMPE À EAU
45	REC663-44311-02	663-44341-00	CAJA BOMBA	HOUSING, WATER PUMP	CORPO POMPA	BASE DE POMPE À EAU
46	REC663-44324-00	663-44324-A0	EMPAQUE	GASKET, CARTRIDGE	GUARNIZIONE	JOINT
47	REC663-44323-00	663-44323-00	PLACA EXTERIOR	OUTTER PLATE	PIASTRA EXT.	PLAQUE DE POMPE À EAU
48	REC663-44315-A0	663-44315-A0	EMAPAQUE	GASKET, WATER PUMP	GUARNIZIONE	JOINT
49	REC6H3-44352-00	697-44352-00	IMPULSOR	IMPELLER	GIRANTE	TURBINE
50	REC663-44322-00	663-44322-00	CARTUCHO	INSERT CARTRIDGE	CARTUCCIA	INSERT DE POMPE À EAU
51	REC663-44366-00	663-44366-00	GOMA SELLO	DAMPER, WATER SEAL	BOCCOLA GOMMA	BAGUE
52	REC663-44311-02	663-44311-02	CAJA BOMBA	HOUSING, WATER PUMP	CORPO POMPA	CORPS DE POMPE À EAU
53	PAGB/T97.1-8	92995-08600	ARANDELA	WASHER	RONDELLA	RONDELLE
54	REC97095-08045	97095-08045	PERNO	BOLT	VITE	VIS
55	REC97095-08055	97095-08055	PERNO	BOLT	VITE	VIS

2T STROKES 75A/AED/AEDL/AET/AEHD/AEDX • 85A/AE/AET/AEDL/AEDX

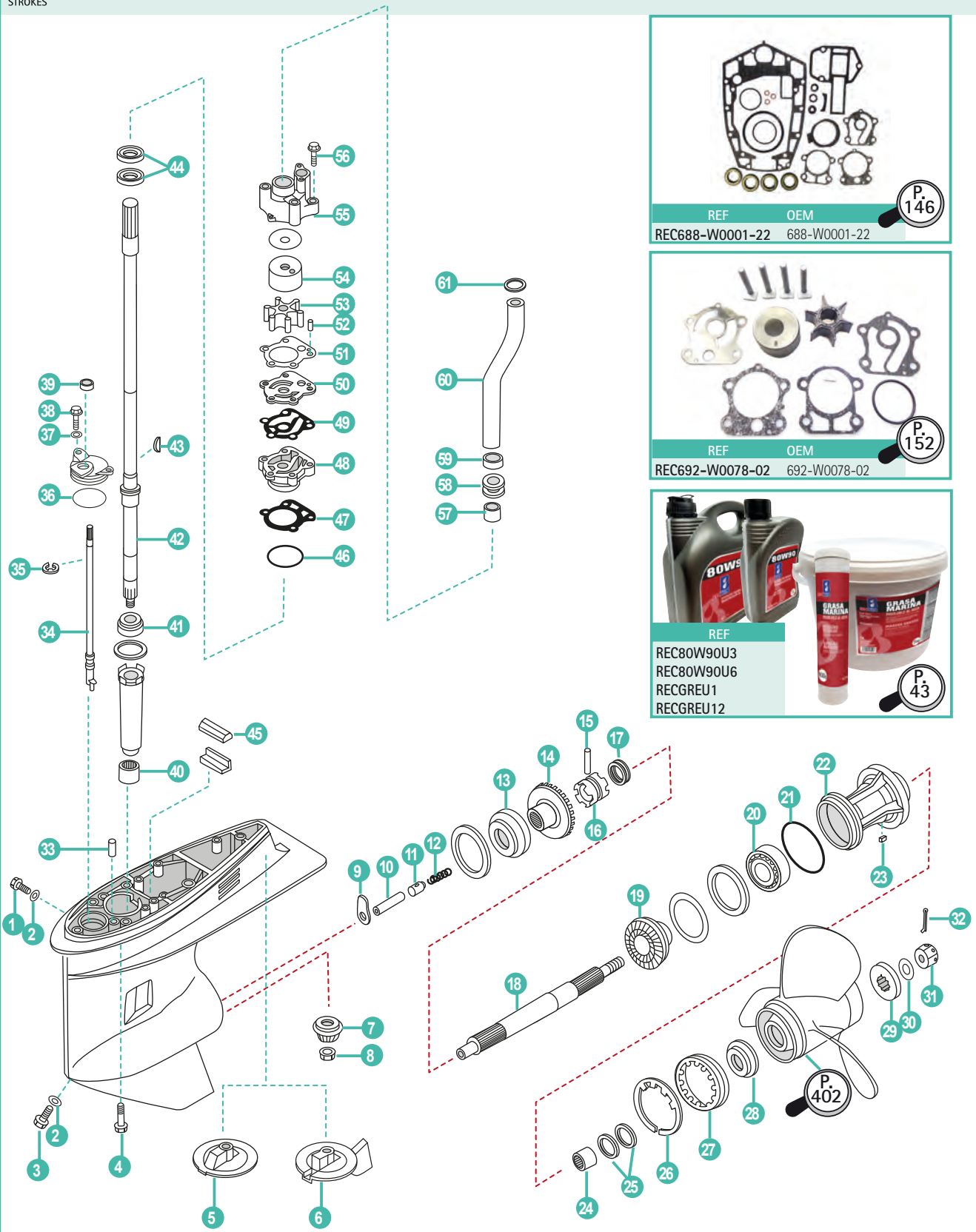

REF	OEM
REC688-W0001-22	688-W0001-22

P. 146

REF	OEM
REC692-W0078-02	692-W0078-02

P. 152

REF
REC80W90U3
REC80W90U6
RECGREU1
RECGREU12

P. 43

P. 402

	REF	OEM				
	REC692-45300-16-8D	692-45300-14-4D	COLA COMPLETA L	LOWER UNIT ASSY L	PIEDE COMPLETO L	EMBASE COMPLETE L
1	REC90340-08002	90340-08002	TAPÓN	PLUG STRAIGHT SCREW	TAPPO	BOUCHON DE VIDANGE
2	REC90430-08020	90430-08020	JUNTA	GASKET	GUARNIZIONE	JOINT
3	REC688-45341-00	688-45341-10	TAPÓN	PLUG DRAIN	TAPPO	BOUCHON DE VIDANGE
4	REC97075-10040	97075-10040	TORNILLO	BOLT WITH WASHER	VITE	VIS
5	TEN01153	6E5-45371-10	ÁNODO TIMÓN	TAB-TRIM	ANODO	ANODE

	REF	OEM				
6	CM688-45371-02	688-45371-02	ÁNODO TIMÓN STD.	TAB-TRIM STD	ANODO STD	ANODE
7	REC688-45551-00	688-45551-01	PIÑÓN ATAQUE	INITIATIVE GEAR	MARCIA INIZIATIVA	PIGNON D'ATTAQUE
8	REC90170-16M01	90170-16M01	TUERCA	NUT	DADO	ECROU
9	REC663-44151-00	663-44151-00	LEVA	CAM, SHIFT	LEVA	CAME
10	REC688-45635-00	688-45635-00	BULÓN	PLUNGER, SHIFT	BULLONE	BOULON
11	REC688-45634-00	688-45634-00	EMPUJADOR	SLIDE, SHIFT	SCORREVOLE	DOUILLE
12	REC90501-16233	90501-16233	MUELLE	SPRING, COMPRESSION	MOLLA	RESSORT
13	REC93332-000W7	93332-000W7	RODAMIENTO	BEARING	CUSCINETTO	ROULEMENT
14	REC688-45560-00	688-45560-00	PIÑÓN MARCHA AVANTE	POSITIVE GEAR ASSY	PIGNONE MARCIA AVANTI	PIGNON DE MARCHE AVANT
15	REC90250-07M02	90250-07M02	PASADOR	PIN, STRAIGHT	SPINOTTO	PIN
16	REC688-45631-00	688-45631-01	DESPLAZABLE	CLUTCH, DOG	GIUNTO A DENTI FRONTALE	CRABOT
17	REC688-45633-00	688-45633-00	ARO METÁLICO	RING, CROSS PIN	O-RING	JOINT TORIQUE
18	REC688-45611-00	688-45611-00	EJE HÉLICE	SHAFT, PROPELLER	ASSE ELICA	ARBRE D'HELICE
19	REC688-45570-00	688-45571-01	PIÑÓN MARCHA ATRÁS	REVERSE GEAR	PIGNONE MARCIA INDIETRO	PIGNON MARCHE ARRIÈRE
20	REC93306-207U0	93306-207U0	RODAMIENTO	BEARING	CUSCINETTO	ROULEMENT
21	REC93210-85M97	93210-85M97	ARO TÓRICO	O-RING	O-RING	JOOINT TORIQUE
22	REC688-45331-00-94	688-45331-00-94	DIÁBOLO	HOUSING, BEARING	COP. CASSA INGRANAGGI	DIABOLO
23	REC90282-04010	90282-04010	CHAVETA	KEY, STRAIGHT	CHIAVETTA	CLAVETTE
24	REC93317-325U0	93317-325U0	RODAMIENTO	BEARING	CUSCINETTO	ROULEMENT
25	REC93101-25M03	93101-25M03	RETÉN	OIL SEAL	PARAOLIO	JOINT SPI
26	REC688-45383-01	688-45383-02	ARANDELA CIERRE	WASHER, CLAW	RONDELLA CHIUSURA	RONDELLE
27	REC688-45384-00	688-45384-00	TUERCA	NUT	DADO	ECROU
28	REC688-45987-00	688-45987-01	SEPARADOR	SPACER	DISTANZIALE	ENTRETOISE
29	REC67F-45997-00	67F-45997-00	SEPARADOR	SPACER	DISTANZIALE	ENTRETOISE
30	REC90389-25M00	90389-25M00	CASQUILLO	BUSH	BOCCOLA	RONDELLE
31	REC90171-16011	90171-16011	TUERCA	NUT, CASTLE	DADO	ECROU D'HELICE
32	REC91490-40030	91490-40025	PASADOR ALETAS	PIN, COTTER	SPINOTTO	GOUPILLE
33	REC93606-12019	93606-12019	PASADOR	PIN, DOWEL	SPINOTTO	PIN
34	REC663-44144-01	663-44144-01	EJE SELECTOR	ROD, SHIFT	ASSE SELETTORE	ARBRE DE VITESSE
35	REC99001-08600-00	99001-08600	CERCLIP	CIRCLIP	CIRCLIP	CIRCLIP
36	REC93210-49046	93210-49046	ARO TÓRICO	O-RING	O-RING	JOINT TORIQUE
37	PAGB/T5783-M6X16	92995-06600	ARANDELA	WASHER	RONDELLA	RONDELLE
38	PAGB/T97.1-6	97095-06016	TORNILLO	BOLT	VITE	VIS
39	REC93106-09014	93106-09014	RETÉN	OIL SEAL	PARAOLIO	JOINT SPI
40	REC93315-325V1	93315-325V1	RODAMIENTO	BEARING	CUSCINETTO	ROULEMENT
41	REC93332-000U3	93332-000U3	RODAMIENTO	BEARING	CUSCINETTO	ROULEMENT
42	REC688-45501-11	688-45501-11	EJE VERTICAL	DRIVE SHAFT COMP.	ASSE VERTICALE	ARBRE VERTICAL
43	REC90280-04M04	90280-04M04	CHAVETA	KEY, WOODRUFF	CHIAVETTA	CLAVETTE
44	REC93101-25M03	93101-25M03	RETÉN	OIL SEAL	PARAOLIO	JOINT SPI
45	REC688-45375-00	688-45375-00	RETÉN DAMPER	DAMPER WASHER	PARAOLIO DAMPER	JOINT SILENT BLOC
46	REC93210-46044	93210-46044	ARO TÓRICO	O-RING	O-RING	JOINT TORIQUE
47	REC688-44316-00	688-44316-A0	JUNTA	GASKET WATER PUMP	GUARNIZIONE	JOINT DE POMPE À EAU
48	REC688-44341-01	688-44341-01-94	TAPA INF. BOMBA AGUA	HOUSING, WATER PUMP	CORPO INF. POMPA ACQUA	BASE DE POMPE À EAU
49	REC688-44324-00	688-44324-A0	JUNTA	GASKET, CARTRIDGE	GUARNIZIONE	JOINT
50	REC688-44323-00	688-44323-40	PLATO	OUTTER PLATE, CARTRIDGE	PIASTRA	PLAQUE DE POMPE À EAU
51	REC688-44315-00	688-44315-A0	JUNTA	GASKET, WATER PUMP	GUARNIZIONE	JOINT
52	PAF25-04000007	93604-10M03	CENTRADOR	PIN, DOWEL	SPINOTTO	PIN
53	REC688-44352-03	688-44352-03	TURBINA	IMPELLER	GIRANTE	TURBINE
54	REC688-44322-00	688-44322-00	CASQUILLO INOX.	INSERT, CARTRIDGE	BOCCOLA INOX.	INSERT DE POMPE À EAU
55	REC688-44311-01	688-44311-01	CUERPO BOMBA AGUA	HOUSING, WATER PUMP	CORPO POMPA ACQUA	CORPS DE POMPE À EAU
56	REC90119-08M13	90119-08M13	TORNILLO	BOLT WITH WASHER	VITE	VIS
57	REC663-44366-00	663-44366-00	CASQUILLO GOMA	DAMPER, WATER SEAL	BOCCOLA GOMMA	BAGUE
58	PAT40-02000002	663-44367-00	GOMA DEL SELLO DE AGUA	GUIDE BUSHING, WATER PIPE	GU	GUIDE DE PIPE D'EAU
59	REC90430-12072	90430-12072	JUNTA	GASKET	GUARNIZIONE	JOINT
60	REC688-44361-10	688-44361-10	TUBO DE AGUA L	WATER TUBE L	TUBO ACQUA L	TUBE D'EAU L
61	PAF25-02000019	90202-12060	ARANDELA	WASHER	RONDELLA	RONDELLE

2T STROKES 75CETOL/TLR(B)/C'08/TL • 80AEO/AETO/A/AEMTO • 85A/AEO/TLR/AET/AET(O)/TR(H) • 90A/AEO/TLR/AET/AET(O)/TR(H)

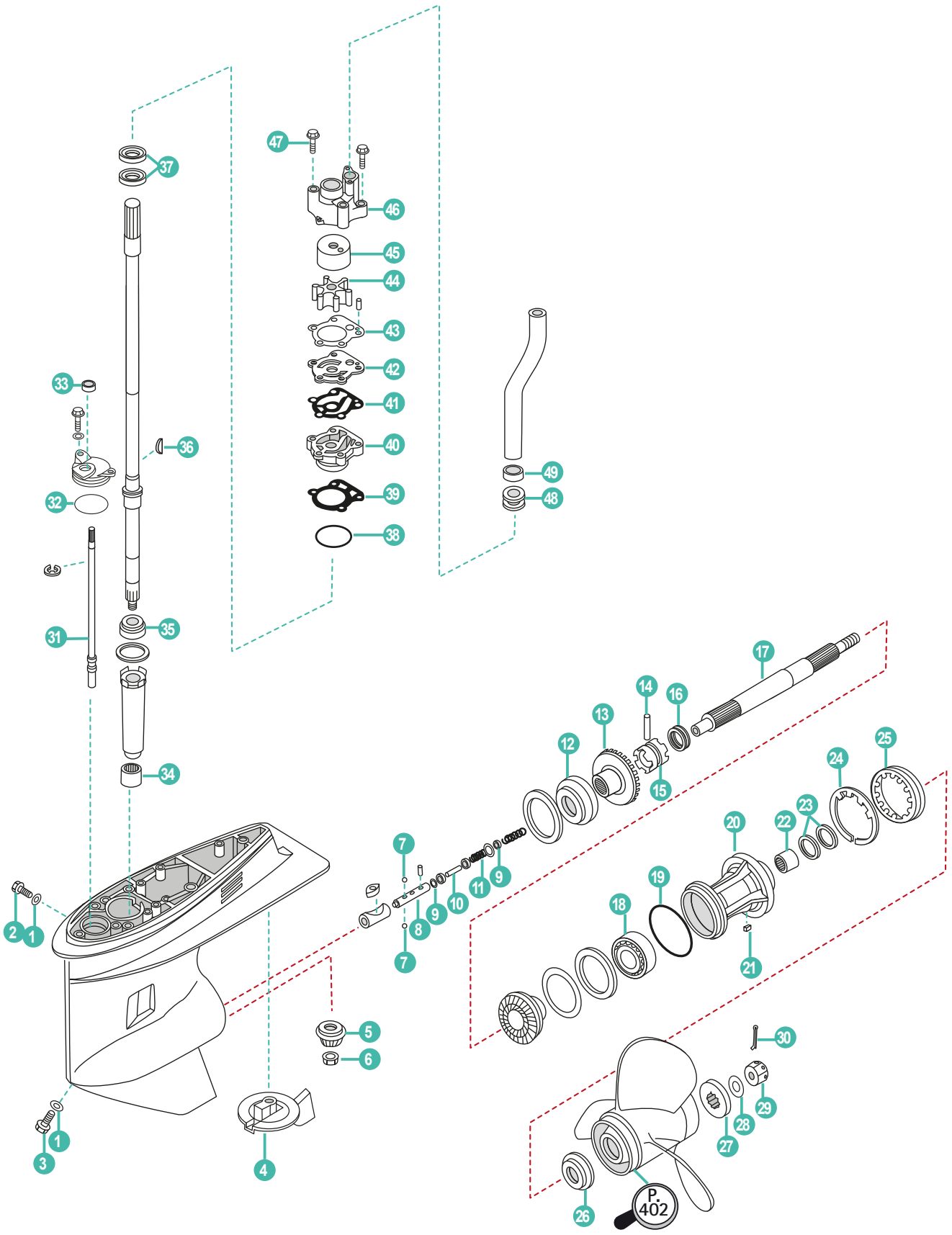

	REF	OEM				
1	REC90430-08020	90430-08020-00	JUNTA	GASKET	GUARNIZIONE	JOINT
2	REC90340-08002	90340-08002	TAPÓN	PLUG	TAPPO	BOUCHON DE VIDANGE
3	REC688-45341-00	688-45341-00-00	TAPÓN	PLUG	TAPPO	BOUCHON DE VIDANGE
4	CM688-45371-02	688-45371-02-00	ÁNODO	ANODE	ANODO	ANODE
5	REC688-45551-00	688-45551-01-00	PIÑÓN ATAQUE	INITIATIVE GEAR	MARCIA INIZIATIVA	PIGNON D'ATTAQUE
6	REC90170-16M01	90170-16M01-00	TUERCA	NUT	DADO	ECROU
7	REC93503-16003	93503-16003	ESFERA	BALL	SFERA	BILLE
8	REC6H1-45634-02	6H1-45634-02	DESPLAZABLE	SLIDE, SHIFT	SCORREVOLE	DOUILLE
9	REC90183-02M03	90183-02M03	TUERCA	NUT	DADO	ECROU
10	REC6H1-45668-00	6H1-45668-00	EJE	SHAFT	ASSE	ARBRE
11	REC90501-12M48	90501-12M48	RESORTE	SPRING	MOLLA	RESSORT
12	REC93332-000W7	93332-000W7-00	RODAMIENTO	BEARING	CUSCINETTO	ROULEMENT
13	REC688-45560-00	688-45560-00-00	PIÑÓN MARCHA AVANTE	POSITIVE GEAR ASSY	PIGNONE MARCIA AVANTI	PIGNON DE MARCHE AVANT
14	REC90250-07M02	90250-07M02-00	PASADOR	PIN	SPINOTTO	CLAVETTE
15	REC6H1-45631-01	6H1-45631-01-00	SELECTOR	CLUTCH	SELETTORE	CRABOT
16	REC688-45633-00	688-45633-00-00	MUELLE	SPRING	MOLLA	RESSORT
17	REC6H1-45611-00	6H1-45611-01-00	EJE HÉLICE	PROPELLER SHAFT	ASSE ELICA	ARBRE D'HELICE
18	REC93306-207U0	93306-207U0-00	RODAMIENTO	BEARING	CUSCINETTO	ROULEMENT
19	REC93210-85M97	93210-85M97-00	ARO TÓRICO	O-RING	O-RING	JOINT TORIQUE
20	REC688-45331-00-94	688-45331-00-94	DIAVOLO	DIABOLO	DIAVOLO	DIABOLO
21	REC90282-04010	90282-04010	CHAVETA	KEY	CHIAVETTA	CLAVETTE
22	REC93317-325U0	93317-325U0-00	RODAMIENTO	BEARING	CUSCINETTO	ROULEMENT
23	REC93101-25M03	93101-25M03-00	RETÉN	OIL SEAL	PARAOLIO	JOINT SPI
24	REC688-45383-01	688-45383-02-00	ARANDELA	WASHER	RONDELLA	RONDELLE
25	REC688-45384-00	688-45384-00-00	TUERCA	NUT	DADO	ECROU
26	REC688-45987-00	688-45987-01-00	ESPACIADOR	SPACER	DISTANZIALE	ENTRETOISE
27	REC688-45997-00	688-45997-01-00	ESPACIADOR	SPACER	DISTANZIALE	ENTRETOISE
28	REC90201-17M00	90201-17M00-00	ARANDELA	WASHER	RONDELLA	RONDELLE
29	REC90171-16011	90171-16011-00	TUERCA	NUT	DADO	ECROU D'HELICE
30	REC91490-40030	91490-40030-00	PASADOR	PIN	SPINOTTO	GOUPILLE
31	REC6H1-44144-00	6H1-44144-00	VARILLA CAMBIO	SHIFT ROD	ASSE SELETTORE	LEVIER DE VITESSE
32	REC93210-49046	93210-49046-00	ANILLO	O-RING	O-RING	JOINT TORIQUE
33	REC93106-09014	93106-09014-00	RETÉN	OIL SEAL	PARAOLIO	JOINT SPI
34	REC93315-325V1	93315-325V1-00	RODAMIENTO	BEARING	CUSCINETTO	ROULEMENT
35	REC93332-000U3	93332-000U3-00	RODAMIENTO	BEARING	CUSCINETTO	ROULEMENT
36	REC90280-04M04	90280-04M04-00	CHAVETA	KEY	CHIAVETTA	CLAVETTE
37	REC93101-25M03	93101-25M03-00	RETÉN	OIL SEAL	PARAOLIO	JOINT SPI
38	REC93210-46044	93210-46044-00	ANILLO, BASE	O-RING	O-RING	JOINT TORIQUE
39	REC688-44316-00	688-44316-A0-00	JUNTA, BASE	GASKET	GUARNIZIONE	JOINT
40	REC688-44341-01	688-44341-01-94	BASE, BOMBA AGUA	HOUSING WATER PUMP	BASE POMPA ACQUA	BASE DE POMPE À EAU
41	REC688-44324-00	688-44324-A0-00	JUNTA	GASKET	GUARNIZIONE	JOINT
42	REC688-44323-00	688-44323-00-00	PLATO	PLATE	PIASTRA	PLAQUE DE POMPE À EAU
43	REC688-44315-00	688-44315-A0-00	JUNTA	GASKET	GUARNIZIONE	JOINT
44	REC688-44352-03	688-44352-03-00	TURBINA	IMPELLER	GIRANTE	TURBINE
45	REC688-44322-00	688-44322-00-00	ACOPLAMIENTO INOX.	INSERT	BOCCOLA INOX.	INSERT DE POMPE À EAU
46	REC688-44311-01	688-44311-01-00	CUERPO BOMBA AGUA	HOUSING	CORPO POMA ACQUA	CORPS DE POMPE À EAU
47	REC97395-08070	97395-08070-00	TORNILLO	BOLT	VITE	VIS
48	REC663-44366-00	663-44366-00	RETÉN	SEAL	PARAOLIO	BAGUE
49	REC90430-12072	90430-12072-00	JUNTA	GASKET	GUARNIZIONE	JOINT

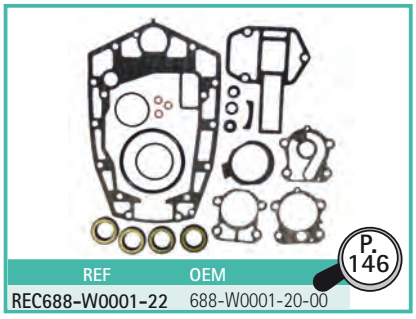

REF	OEM
REC688-W0001-22	688-W0001-20-00

P. 146

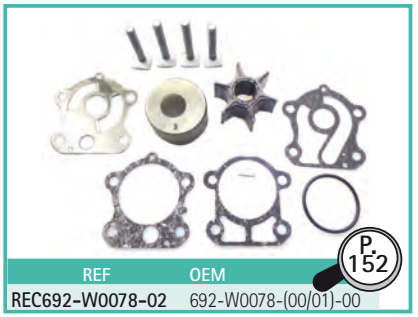

REF	OEM
REC692-W0078-02	692-W0078-(00/01)-00

P. 152



REF
REC80W90U3
REC80W90U6
RECGREU1
RECGREU12

P. 43

2T STROKES 115B/C/CETO/TXRZ/TLRA • 130BETO/TLRA/TLRZ (V4)

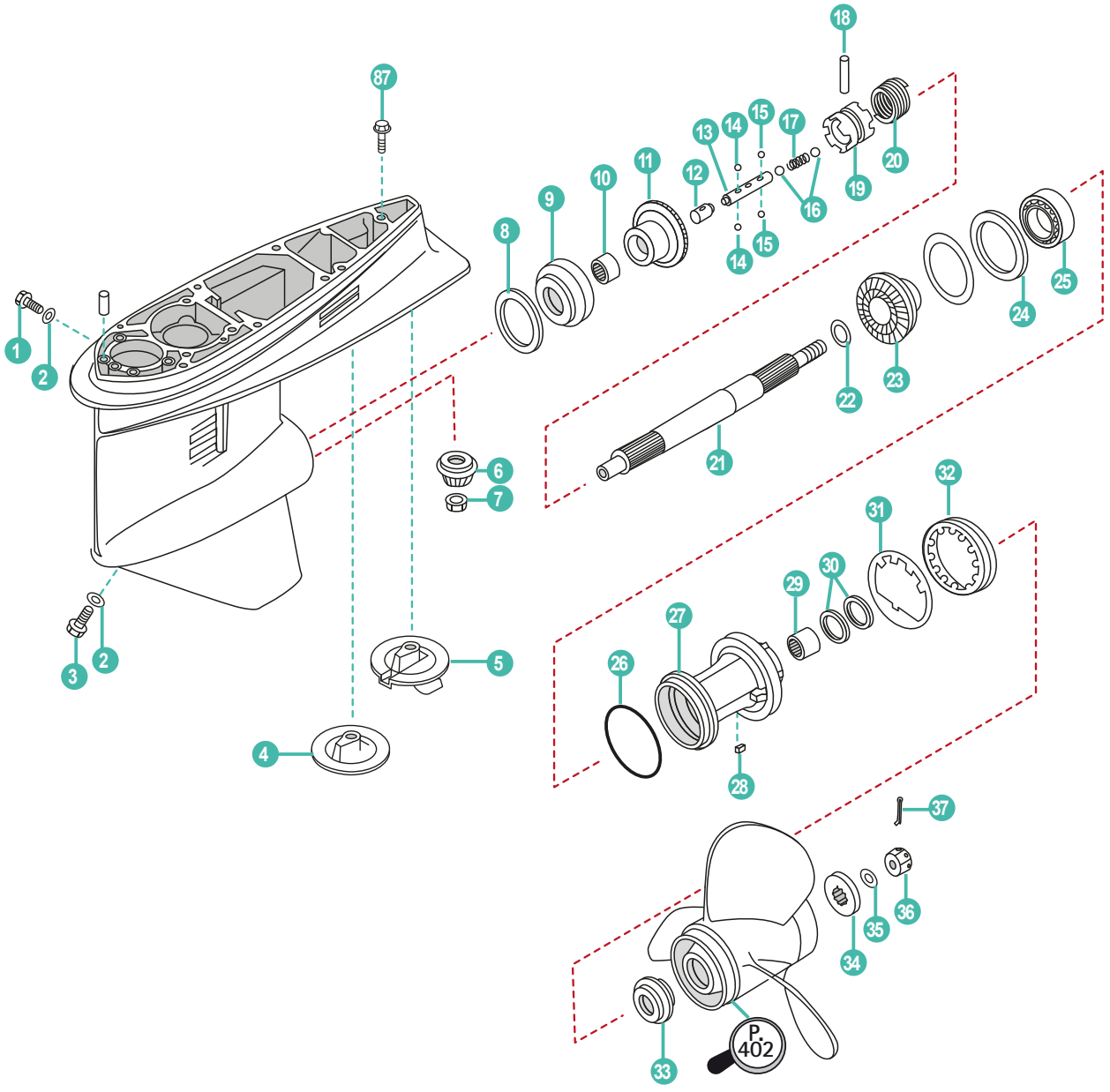



REF	OEM
REC6N6-W0078-02	6E5-W0078-02

P. 152

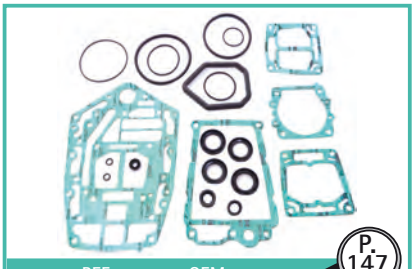

REF	OEM
REC6E5-W0001-F1	6E5-W0001-F1

P. 147



REF
REC80W90U3
REC80W90U6
RECGREU1
RECGREU12

P. 158

	REF	OEM				
	REC405-A20	6E5-45300-16-8D	COLA COMPLETA	LOWER UNIT ASSY	PIEDE COMPLETO	EMBASE COMPLETE
	REC405-A25	6E5-45300-26-8D	COLA COMPLETA	LOWER UNIT ASSY	PIEDE COMPLETO	EMBASE COMPLETE
1	REC90340-08002	90340-08M04	TAPÓN	PLUG, STRAIGHT SCREW	TAPPO	BOUCHON DE VIDANGE
2	REC90430-08020	90430-08020	JUNTA	GASKET	GUARNIZIONE	JOINT
3	REC688-45341-00	688-45341-00	TAPÓN	PLUG DRAIN	TAPPO	BOUCHON DE VIDANGE
4	REC6E5-45371-01	6E5-45371-01	ZINC HÉLICE ALU	TAB-TRIM	ZINCO ELICA ALLU.	ANODE
5	TEN01153	6E5-45371-10	ZINC HÉLICE INOX	TAB-TRIM	ZINCO ELICA INOX.	ANODE
6	REC6E5-45551-00	6E5-45551-02	PIÑÓN ATAQUE	INITIATIVE GEAR	MARCIA INIZIATIVA	PIGNON D'ATTAQUE
7	REC90170-16M01	90170-16M01	TUERCA	NUT	DADO	ECROU
8	REC6E5-45567-01	6E5-45567-01-60	KIT GRUESO	SHIM SET	KIT SPESSORE	KIT CALE
9	REC93332-000U7	93332-000U7	RODAMIENTO	BEARING	CUSCINETTO	ROULEMENT
10	REC93315-425U7	93315-425U7	RODAMIENTO	BEARING	CUSCINETTO	ROULEMENT
11	REC6E5-45560-00	6E5-45560-01	PIÑÓN MARCHA AVANTE	POSITIVE GEAR ASSY	PIGNONE MARCIA AVANTI	PIGNON DE MARCHE AVANT
12	REC6E5-45641-03	6E5-45641-02	BULÓN	SHIFTER	BULLONE	PISTON
13	REC6E5-45634-01	6E5-45634-01	PASADOR DESPLAZABLE	SLIDE, SHIFT	PASSANTE	DOUILLE
14	REC93507-32031	93507-32031	BOLA	BALL	BOLLA	BILLE
15	REC93503-16003	93503-16003	BOLA	BALL	BOLLA	BILLE
16	REC93511-32027	93511-32027	BOLA	BALL	BOLLA	BILLE
17	REC90501-16M37	90501-16M37	MUELLE	SPRING, COMPRESSION	MOLLA	RESSORT
18	REC90250-08M07	90250-08M07	PASADOR	PIN STRAIGHT	SPINOTTO	PIN
19	REC6E5-45631-00	6E5-45631-01	DESPLAZABLE	CLUTCH, DOG	SCORREVOLE	CRABOT
20	REC6E5-45633-01	6E5-45633-01	ARILLO METÁLICO	RING, CROSS PIN	O-RING	JOINT TORIQUE
21	REC6E5-45611-00	6E5-45611-01	EJE HÉLICE	SHAFT, PROPELLER	ASSE ELICA	ARBRE D'HELICE
22	REC90201-30M92	90201-30M92	ARANDELA	WASHER, PLATE	RONDELLA	RONDELLE
23	REC6E5-45570-00	6E5-45571-01	PIÑÓN MARCHA ATRÁS	REVERSE GEAR	PIGNONE MARCIA INDIETRO	PIGNON MARCHE ARRIÈRE
24	REC6E5-45576-00	6E5-45576-00	ARANDELA	WASHER, THURST	RONDELLA	RONDELLE
25	REC93306-208U0	93306-208U0	RODAMIENTO	BEARING	CUSCINETTO	ROULEMENT
26	REC93210-86M39	93210-86M39	ARO TÓRICO	O-RING	O-RING	JOINT TORIQUE
27	REC6E5-45332-00-94	6E5-45332-00-94	CUERPO COJINETE	HOUSING, BEARING	CUSCINETTO	DIABOLO
28	REC90282-04010	90282-04010	CHAVETA	KEY, STRAIGHT	CHIAVETTA	CLAVETTE
29	REC93315-430U8	93315-430U8	RODAMIENTO	BEARING	CUSCINETTO	ROULEMENT
30	REC93101-30M17	93101-30M17	RETÉN	OIL SEAL	PARAOLIO	JOINT SPI
31	REC688-45383-01	688-45383-02	ARANDELA	WASHER, CLAW	RONDELLA	RONDELLE
32	REC688-45384-00	688-45384-00	TUERCA	NUT	DADO	ECROU
33	REC6E5-45987-00	6E5-45987-01	SEPARADOR	SPACER	SPESSORE	ENTRETOISE
34	REC688-45997-00	688-45997-01	SEPARADOR	SPACER	SPESSORE	ENTRETOISE
35	REC92990-18200	92990-18200	ARANDELA	WASHER	RONDELLA	RONDELLE
36	REC90171-18M04	90171-18M04	TUERCA HÉLICE	NUT, CASTLE	DADO	ECROU D'HELICE
37	REC91490-40030	91490-40030	PASADOR ALETA	PIN, COTTER	SPINOTTO	GOUPILLE
38	PAT85-00000012	90105-10M00	TORNILLO	SCREW	VITE	VIS

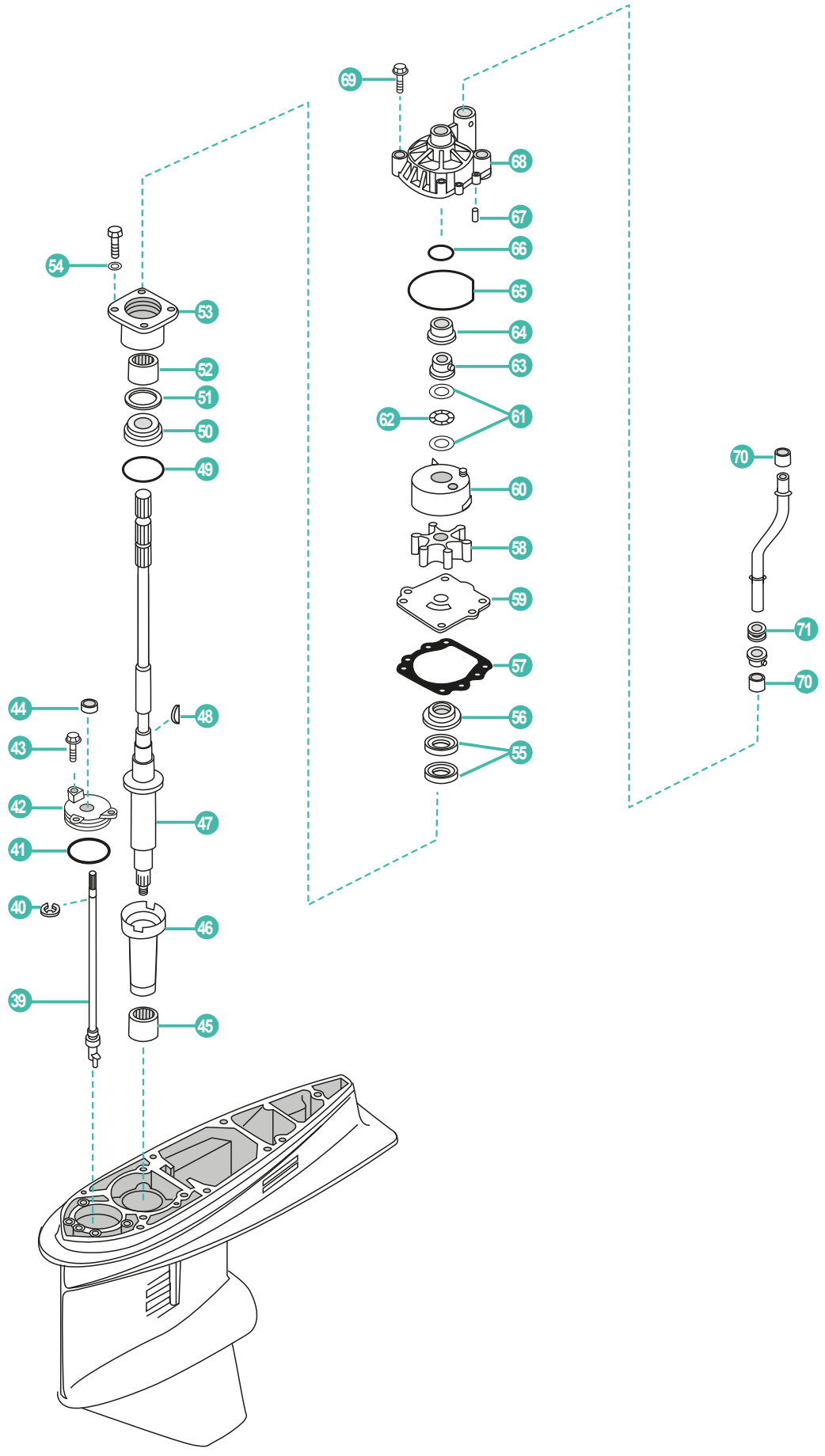
69
68
67
66
65
64
63
62
61
60
58
59
57
56
55
54
53
52
51
50
49
44
43
42
41
40
39
48
47
46
45
70
71
70

	REF	OEM				
39	REC6E5-44150-02	6E5-44150-01	EJE SELECTOR	SHIFT CAM ASSY.	ASSE SELETTORE	ARBRE SELECTEUR
40	REC99001-08600-00	99001-08600	CLIP	CLIP	CLIP	CLIP
41	REC93210-58677	93210-58144	ARO TÓRICO	O-RING	O-RING	JOINT TORIQUE
42	REC6E5-45321-00	6E5-45321-00	PLATO	PLATE	PIASTRA	PLAQUE
43	REC90119-06M10	90119-06M10	TORNILLO	BOLT WITH WASHER	VITE	VIS
44	REC93106-09014	93106-09014	RETÉN	OIL SEAL	PARAOLIO	JOINT SPI
45	REC93315-628U9	93315-628U9	RODAMIENTO	BEARING	CUSCINETTO	ROULEMENT
46	REC6E5-45536-00	6E5-45536-00	CAMISA	SLEEVE	CAMICIA	TUBE GUIDE
47	REC6E5-45501-01	6E5-45501-01	EJE VERTICAL S	DRIVE SHAFT COMP. S	ASSE VERTICALE S	ARBRE VERTICAL S
48	REC90280-04M05	90280-04M05	CHAVETA	KEY, WOODRUF	CHIAVETTA	CLAVETTE
49	REC93210-54534	93210-55M14	ARO TÓRICO	O-RING	O-RING	JOINT TORIQUE
50	REC93341-930V2	93341-930V2	RODAMIENTO	BEARING	CUSCINETTO	ROULEMENT
51	REC6E5-45587-01	6E5-45587-01	GRUESO	SHIM	SPESSORE	CALE
52	REC93317-330U2	93317-330U2	RODAMIENTO	BEARING	CUSCINETTO	ROULEMENT
53	REC6E5-45331-00-94	6E5-45331-00-94	CUERPO RODAMIENTO	HOUSING, BEARING	SEDE CUSCINETTO	PALIER DE ROULEMENT
54	PAGB/T97.1-8	92995-08600	ARANDELA	WASHER	RONDELLA	RONDELLE
55	REC93101-28M16	93101-28M16	RETÉN	OIL SEAL	PARAOLIO	JOINT SPI
56	REC6E5-45344-00	6E5-45344-00	TAPA RETÉN	COVER, OIL SEAL	COPERCHIO	COUVERCLE JOINT SPI
57	REC6E5-44315-A0	6E5-44315-A0	JUNTA BOMBA	GASKET, WATER PUMP	GUARNIZIONE	JOINT
58	REC6E5-44323-00-40	6E5-44323-00	PLATO	OUTTER PLATE, CARTRIDGE	PIASTRA	TURBINE
59	REC6E5-44352-01	6E5-44352-01	TURBINA	IMPELLER	GIRANTE	PLAQUE DE POMPE À EAU
60	REC61A-44322-02	61A-44322-02	CASQUILLO INOX	INSERT, CARTRIDGE	BOCCOLA INOX.	INSERT DE POMPE À EAU
61	REC90201-22M01	90201-22M01	ARANDELA	WASHER	RONDELLA	RONDELLE
62	REC90206-22M19	90206-22M19	ARANDELA	WASHER	RONDELLA	RONDELLE
63	REC61A-45538-00	61A-45538-00	ESPACIADOR	SPACER	DISTANZIALE	ENTRETOISE
64	REC61A-45527-00	61A-45527-00	CASQUILLO	COLLAR, DRIVE SHAFT	BOCCOLA	GUIDE
65	REC93210-86M38	93210-86M38	ARO TÓRICO	O-RING	O-RING	JOINT TORIQUE
66	REC93210-37160	93210-37160	ARO TÓRICO	O-RING	O-RING	JOINT TORIQUE
67	REC93606-12019	93606-12019	PIN CENTRADOR	PIN DOWEL	SPINOTTO	PIN
68	REC61A-44311-00	61A-44311-01	CUERPO BOMBA	HOUSING, WATER PUMP	CORPO POMPA	CORPS DE POMPE À EAU
69	REC90119-08M14	90119-08M14	TORNILLO	BOLT, WITH WASHER	VITE	VIS
70	REC6E5-44365-00	6E5-44365-00	CASQUILLO GOMA	DAMPER	BOCCOLA	BAGUE
71	REC6E5-44366-00	6E5-44366-00	CASQUILLO GOMA	DAMPER	BOCCOLA	BAGUE

2T STROKES V6 (1984+)

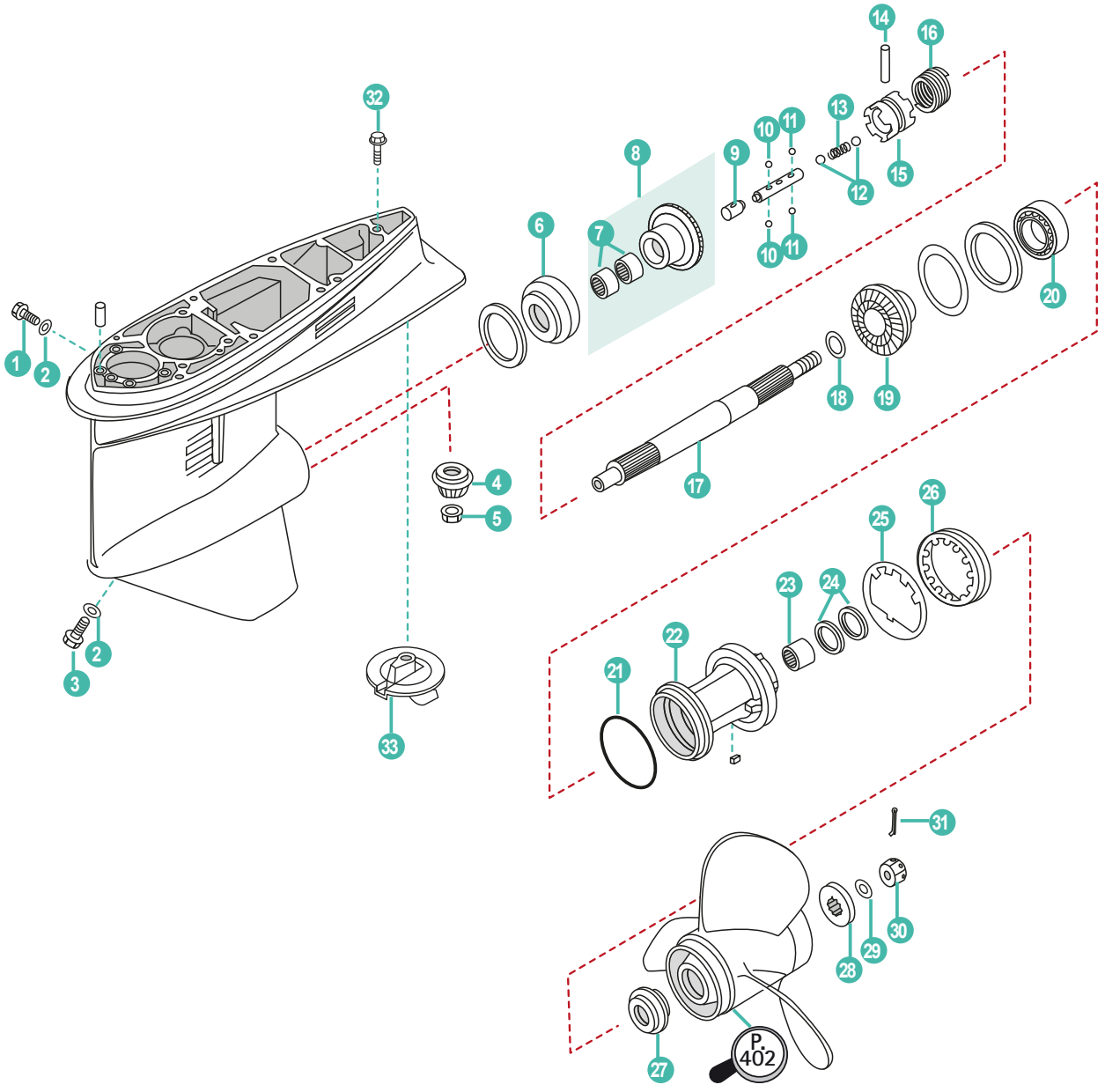

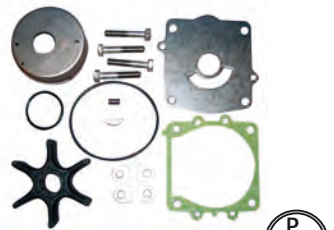

REF	OEM
REC6G5-W0078-A1	6G5-W0078-A1

P. 152

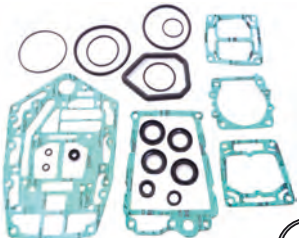

REF	OEM
REC6E5-W0001-F1	6E5-W0001-F1

P. 147



REF
REC80W90U3
REC80W90U6
RECGREU1
RECGREU12

P. 43

	REF	OEM				
	REC416-A20	64D-45300-02-8D	COLA COMPLETA 20"	LOWER UNIT ASSY 20"	PIEDE COMPLETO 20"	EMBASE COMPLETE 20"
	REC416-A25	64D-45300-22-8D	COLA COMPLETA 25"	LOWER UNIT ASSY 25"	PIEDE COMPLETO 25"	EMBASE COMPLETE 25"
1	REC90340-08002	90340-08002	TAPÓN	PLUG, STRAIGHT SCREW	TAPPO	BOUCHON DE VIDANGE
2	REC90430-08020	90430-08020	JUNTA	GASKET	GUARNIZIONE	JOINT
3	REC688-45341-00	688-45341-10	TAPÓN	PLUG, DRAIN	TAPPO	BOUCHON DE VIDANGE
4	REC6G5-45551-00	6G5-45551-01	PIÑÓN ATAQUE	INITIATIVE GEAR	MARCIA INIZIATIVA	PIGNON D'ATTAQUE
5	REC90170-16M01	93170-16M01	TUERCA	NUT	DADO	ECROU
6	REC93332-000V3	93332-000V3	RODAMIENTO	BEARING	CUSCINETTO	ROULEMENT
7	REC93315-425V3	93315-425V3	RODAMIENTO	BEARING	CUSCINETTO	ROULEMENT
8	REC6G5-45560-00	6G5-45560-01	PIÑÓN MARCHA AVANTE	POSITIVE GEAR ASSY	PIGNONE MARCIA AVANTI	PIGNON DE MARCHE AVANT
9	REC6E5-45641-03	6E5-45641-03	PITOT	PITOT	PITOT	PITOT
10	REC93507-32031	93507-32031	BOLA	BALL	BOLLA	BILLE
11	REC93503-16003	93503-16003	BOLA	BALL	BOLLA	BILLE
12	REC93511-32027	93511-32027	BOLA	BALL	BOLLA	BILLE
13	REC90501-16M37	90501-16M37	MUELLE	SPRING	MOLLA	RESSORT
14	REC90250-08M07	90250-08M07	PASADOR	PIN, STRAIGHT	SPINOTTO	CLAVETTE
15	REC6G5-45631-00	6G5-45631-00	DESPLAZABLE	CLUTCH, DOG	SCORREVOLE	CRABOT
16	REC6E5-45633-01	6E5-45633-01	ANILLO	RING, CROSS PIN	O-RING	JOINT TORIQUE
17	REC6J9-45611-00	6J9-45611-01	EJE HÉLICE	SHAFT, PROPELLER	ASSE ELICA	ARBRE D'HELICE
18	REC90201-30M92	90201-30M92	ARANDELA	WASHER, PLATE	RONDELLA	RONDELLE
19	REC6G5-45571-00	6G5-45571-02	PIÑÓN MARCHA ATRÁS	REVERSE GEAR	PIGNONE MARCIA INDIETRO	PIGNON MARCHE ARRIÈRE
20	REC93306-209U0	93306-209U0	RODAMIENTO	BEARING	CUSCINETTO	ROULEMENT
21	REC93210-97M55	93210-97M55	ARO TÓRICO	O-RING	O-RING	JOINT TORIQUE
22	REC6J9-45332-00-CA	6J9-45332-00-CA	DIÁBOLO	BEARING CARRIER	COP. CASSA INGRANAGGI	DIABOLO
23	REC93315-43061	93315-43061	RODAMIENTO	BEARING	CUSCINETTO	ROULEMENT
24	REC93101-30M17	93101-30M17	RETÉN	OIL SEAL	PARAOLIO	JOINT SPI
25	REC6G5-45383-01	6G5-45383-01	ARANDELA	WASHER, CLAW	RONDELLA	RONDELLE
26	REC6G5-45384-00	6G5-45384-00	TUERCA	NUT	DADO	ECROU
27	REC6E5-45987-00	6E5-45978-01	ESPACIADOR	SPACER	DISTANZIALE	ENTRETOISE
28	REC688-45997-00	688-45997-01	ESPACIADOR	SPACER	DISTANZIALE	ENTRETOISE
29	REC92990-18200	92990-18200	ARANDELA	WASHER	RONDELLA	RONDELLE
30	REC90171-18M04	90171-18M04	TUERCA	NUT, CASTLE	DADO	ECROU D'HELICE
31	REC91490-40030	91490-40030	PASADOR	PIN, COTTER	SPINOTTO	GOUPILLE
32	PAT85-00000012	90105-10M00	TORNILLO	SCREW	VITE	VIS
33	CM6E5-45371-01A	6E5-45371-01	ÁNODO	ANODE	ANODO	ANODE

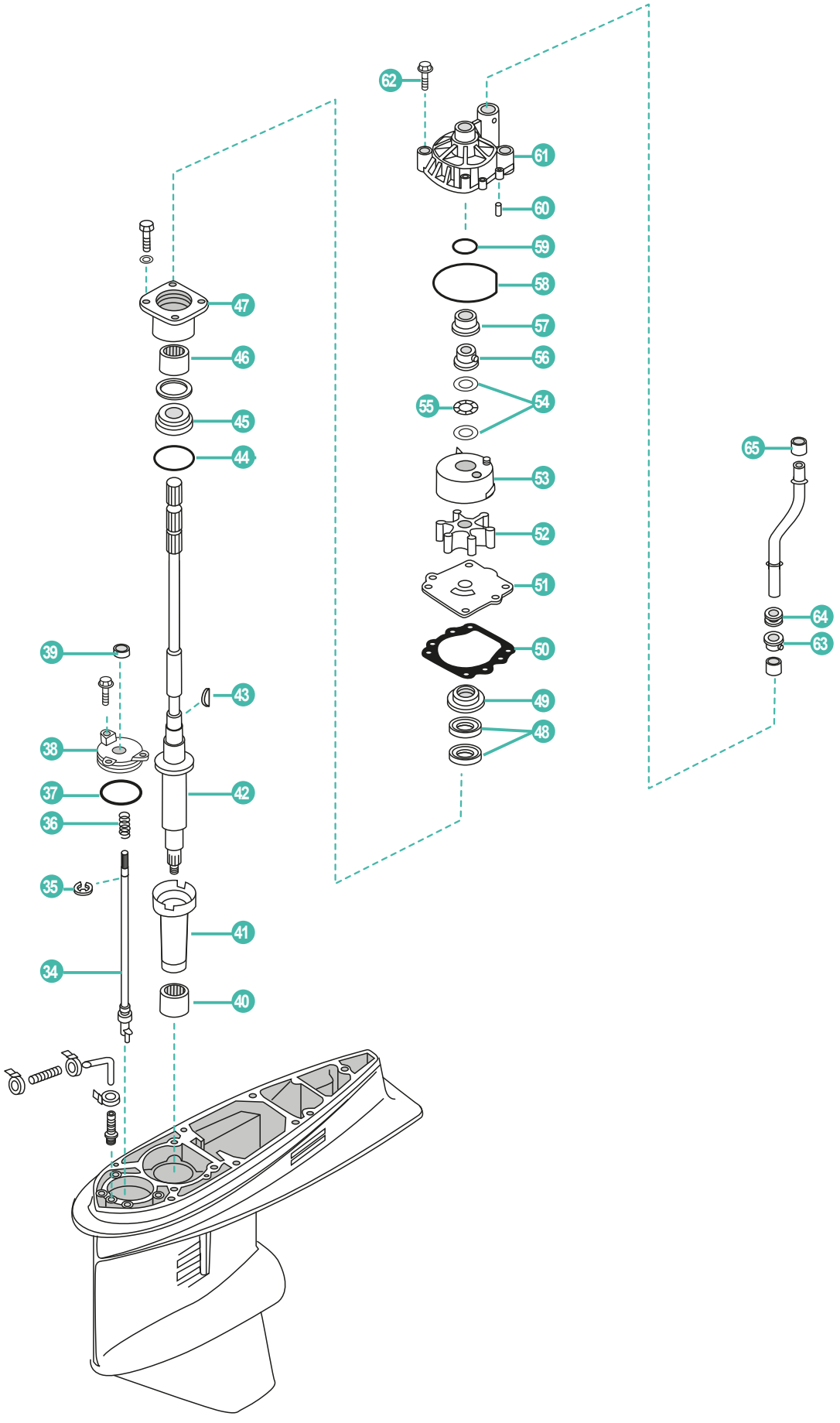
62
61
60
59
58
57
56
55
54
53
52
51
50
49
48
47
46
45
44
43
42
41
40
39
38
37
36
35
34
65
64
63

	REF	OEM				
34	REC6G5-44150-02	6G5-44150-02	EJE CAMBIO	SHIFT SHAFT	ASSE CAMBIO	LEVIER DE VITESSE
35	REC99001-08600-00	99001-08600	CLIP	BEARING	CUSCINETTO	ROULEMENT
36	REC90501-11M10-00	90501-11M10	MUELLE	SPRING	MOLLA	RESSORT
37	REC93210-58677	93210-58144	ARO TÓRICO	O-RING	O-RING	JOINT TORIQUE
38	REC6E5-45321-00	6E5-45321-00	TAPA EJE	SHIFT COVER	COPERCHIO ASSE	COUVERCLE
39	REC93106-09014	93106-09014	RETÉN	OIL SEAL	PARAOLIO	JOINT SPI
40	REC93311-928U5	93311-928U5	RODAMIENTO	BEARING	CUSCINETTO	ROULEMENT
41	REC6G5-45536-01	6G5-45536-01	CAMISA	LUBE SLEEVE	CAMICIA	DOUILLE
42	REC6G5-45501-21	6G5-45501-21	EJE 25"	DRIVE SHAFT COMP. 25"	ASSE VERTICALE 25"	ARBRE VERTICAL 25"
43	REC90280-04M05	90280-04M05	CHAVETA	KEY, WOODRUFF	CHIAVETTA	CLAVETTE
44	REC93210-54534	93210-55M14	ARO TÓRICO	O-RING	O-RING	JOINT TORIQUE
45	REC93341-930V2	93341-930V2	RODAMIENTO	BEARING	CUSCINETTO	ROULEMENT
46	REC93317-330U2	93317-330U2	RODAMIENTO	BEARING	CUSCINETTO	ROULEMENT
47	REC6E5-45331-00-94	6E5-45331-00-94	CUERPO RODAMIENTO	HOUSING, BEARING	SEDE CUSCINETTO	PALIER DE ROULEMENT
48	REC93101-28M16	93101-28M16	RETÉN	OIL SEAL	PARAOLIO	JOINT SPI
49	REC6E5-45344-00	6E5-45344-00	TAPA RETÉN	COVER, OIL SEAL	COPERCHIO	COUVERCLE JOINT SPI
50	REC6E5-44315-A0	6E5-44315-A0	JUNTA	GASKET, WATER PUMP	GUARNIZIONE	JOINT DE POMPE À EAU
51	REC6G5-44323-00	6G5-44323-00	PLATO	OUTER PLATE, CARTRIDGE	PIASTRA	PLAQUE DE POMPE À EAU
52	REC6E5-44352-01	6E5-44352-01	TURBINA	IMPELLER	GIRANTE	TURBINE
53	REC61A-44322-02	61A-44322-02	CASQUILLO INOX. –ANTIGUA–	INSERT, CARTRIDGE -OLDER-	BOCCOLA INOX. -ANTICA-	INSERT DE POMPE À EAU -ANCIEN MODÈLE-
	REC6E5-44322-00	6E5-44322-00	CASQUILLO INOX. –MODERNA–	INSERT, CARTRIDGE -NEWER-	BOCCOLA INOX. -NUOVA-	INSERT DE POMPE À EAU -NOUVEAU MODELE-
54	REC90206-22M19	90206-22M19	ARANDELA	WASHER	RONDELLA	RONDELLE
55	REC90201-22M01	90201-22M01	ARANDELA	WASHER	RONDELLA	RONDELLE
56	REC61A-45538-00	61A-45538-00	ESPACIADOR	SPACER	DISTANZIALE	ENTRETOISE
57	REC61A-45527-00	61A-45527-00	GOMA	COLLAR	GOMMA	BAGUE
58	REC93210-86M38	93210-86M38	ARO TÓRICO	O-RING	O-RING	JOINT TORIQUE
59	REC93210-37160	93210-37160	ARO TÓRICO	O-RING	O-RING	JOINT TORIQUE
60	REC93606-12019	93606-12019	CENTRADOR	PIN, DOWEL	SPINOTTO	PIN
61	REC61A-44311-00	61A-44311-01	CUERPO BOMBA AGUA –ANTIGUA–	HOUSTING, WATER PUMP -OLDER-	CORPO POMPA ACQUA -ANTICA-	CORPS DE POMPE À EAU -ANCIEN MODÈLE-
	REC6E5-44311-00	6E5-44311-00	CUERPO BOMBA AGUA –MODERNA–	HOUSTING, WATER PUMP -NEWER-	CORPO POMPA ACQUA -NUOVA-	CORPS DE POMPE À EAU -NOUVEAU MODÈLE-
62	REC90119-08M14	90119-08M14	TORNILLO	BOLT, WITH WASHER	VITE	VIS
63	REC6E5-44365-00	6E5-44365-00	CASQUILLO GOMA	DAMPER, WATER SEAL	BOCCOLA GOMMA	BAGUE
64	REC6E5-44366-00	6E5-44366-00	SELLO GOMA AGUA	DAMPER, WATER SEAL	BOCCOLA	BAGUE
65	REC6E5-44365-00	6E5-44365-00	SELLO GOMA AGUA	DAMPER, WATER SEAL	BOCCOLA	BAGUE

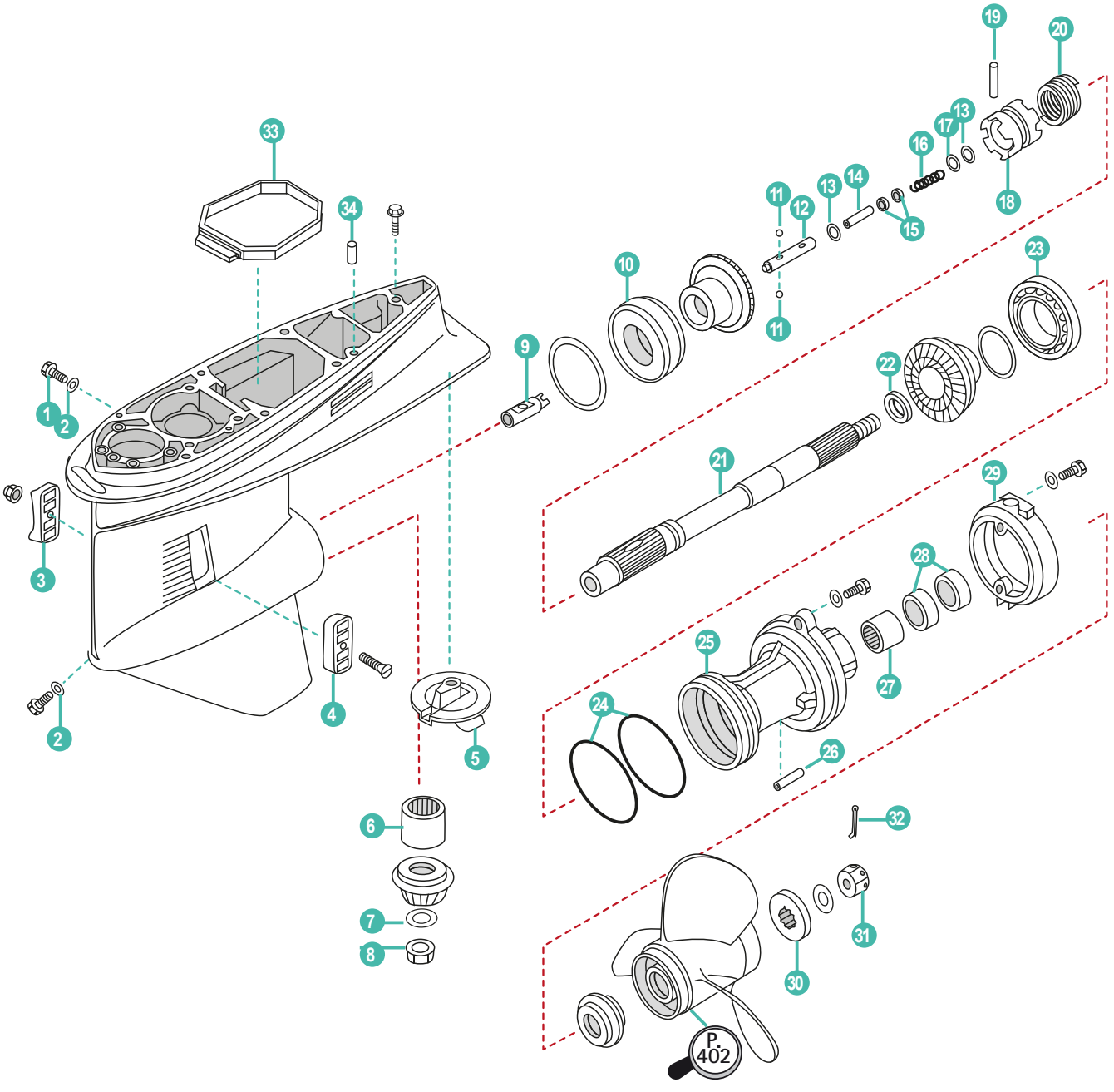
1
2
3
2
4
5
6
7
8
33
34
9
10
11
12
11
13
14
15
16
17
13
18
19
20
23
22
21
29
28
25
27
24
26
32
31
30
P. 402

	REF	OEM				
1	REC90340-08002	90340-08002	TORNILLO	VENT PLUG	VITE	BOUCHON DE VIDANGE
2	REC90430-08020	90430-08020	JUNTA	GASKET, DRAIN PLUG	GUARNIZIONE	JOINT
3	REC61A-45215-10	61A-45215-10	FILTRO TAPA	WATER SCREEN, STD	COPERCHIO FILTRO	GRILLE D'ENTREE D'EAU
4	REC61A-45214-10	61A-45214-10	FILTRO TAPA	WATER SCREEN, PORT	COPERCHIO FILTRO	GRILLE D'ENTREE D'EAU
5	CM61A-45371	61A-45371-00	ÁNODO TIMÓN	TRIM TAB	ANODO	ANODE
6	REC93311-83280	93311-83280	RODAMIENTO	BEARING	CUSCINETTO	ROULEMENT
7	REC90201-16M00	90201-16M00	ARANDELA	WASHER	RONDELLA	RONDELLE
8	REC90170-16M19	90170-16M19	TUERCA DE PIÑÓN	PINION NUT	PIGNONE, DADO	ECROU DE PIGNON
9	REC61A-45641-02	61A-45641-02	DESPLAZABLE	SHIFTER	SCORREVOLE	DOUILLE
10	REC93332-000W1	93332-000W1	RODAMIENTO	BEARING	CUSCINETTO	ROULEMENT
11	REC93501-04011	93501-04011	BOLA	DETENT BALL	BOLLA	BILLE
12	REC61A-45634-01	61A-45634-01	DESPLAZABLE	SHIFT SLIDE	SCORREVOLE	DOUILLE
13	REC90183-02M03	90183-02M03	TUERCA	NUT	DADO	ECROU
14	REC6H1-45668-00	6H1-45668-00	EJE	FREE SHAFT	ASSE	ARBRE
15	REC61A-45635-00	61A-45635-00	GRUESO	SHIFT PLUNGER	SPESSORE	CALE
16	REC90501-10M77	90501-10M77	MUELLE	COMPRESSION SPRING	MOLLA	RESSORT
17	REC90201-02M00	90201-02M00	ARANDELA	PLATE WASHER	RONDELLA	RONDELLE
18	REC61A-45631-03	61A-45631-03	SELECTOR	CLUTCH, 2 STROKE	SELETTORE	CRABOT
19	REC61A-45632-00	61A-45632-00	PASADOR	CROSS PIN	SPINOTTO	CLAVETTE
20	REC61A-45633-00	61A-45633-00	MUELLE	SPRING	MOLLA	RESSORT
21	REC60V-45611-00	60V-45611-00	EJE HÉLICE	PROP SHAFT	ASSE ELICA	ARBRE D'HELICE
22	REC90201-31M00	90201-31M00	ARANDELA	WASHER	RONDELLA	RONDELLE
23	REC93306-210U0	93306-210U0	RODAMIENTO	BEARING	CUSCINETTO	PIGNON
24	REC93211-04384	93211-04384	ARO TÓRICO	O-RING, BEARING CARRIER	O-RING	JOINT TORIQUE
25	REC60V-45332-00-94	60V-45332-00-94	DIÁBOLO	BEARING CARRIER	COP. CASSA INGRANAGGI	DIABOLO
26	REC99590-10114	99590-10114	PIN CENTRADO	ALIGNMENT DOWEL	SPINOTTO	PIN ROULEMENT
27	REC93315-43061	93315-43061	RODAMIENTO	PROP SHAFT BEARING	CUSCINETTO	ROULEMENT
28	REC93101-30M17	93101-30M17	RETÉN	PROP SHAFT SEAL	PARAOLIO	JOINT SPI
29	REC69J-45361-00-8D	69J-45361-00-8D	FUNDA INFERIOR	CAP, LOWER CASING	COPERCHIO INFERIORE	COUVERCLE INFERIEUR
30	REC688-45997-00	688-45997-00	ESPACIADOR	SPACER	SPESSORE	ENTRETOISE
31	REC90171-18M04	90171-18M04	TUERCA	PROP NUT	DADO	ECROU D'HELICE
32	REC91490-40030	91490-40030	PIN	COTTER PIN	SPINOTTO	GOUPILLE
33	REC69J-45375-00	69J-45375-00	JUNTA ESCAPE	EXHAUST DAMPER	GUARNIZIONE1	JOINT D'ECHAPPEMENT
34	REC93608-12M05	93608-12M05	PIN	ALIGNMENT DOWELS	SPINOTTO	PIN

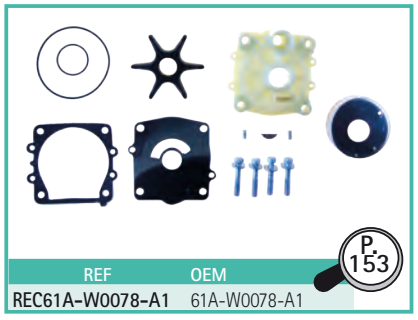

REF	OEM
REC61A-W0078-A1	61A-W0078-A1

P. 153



REF
REC80W90U3
REC80W90U6
RECGREU1
RECGREU12

P. 43

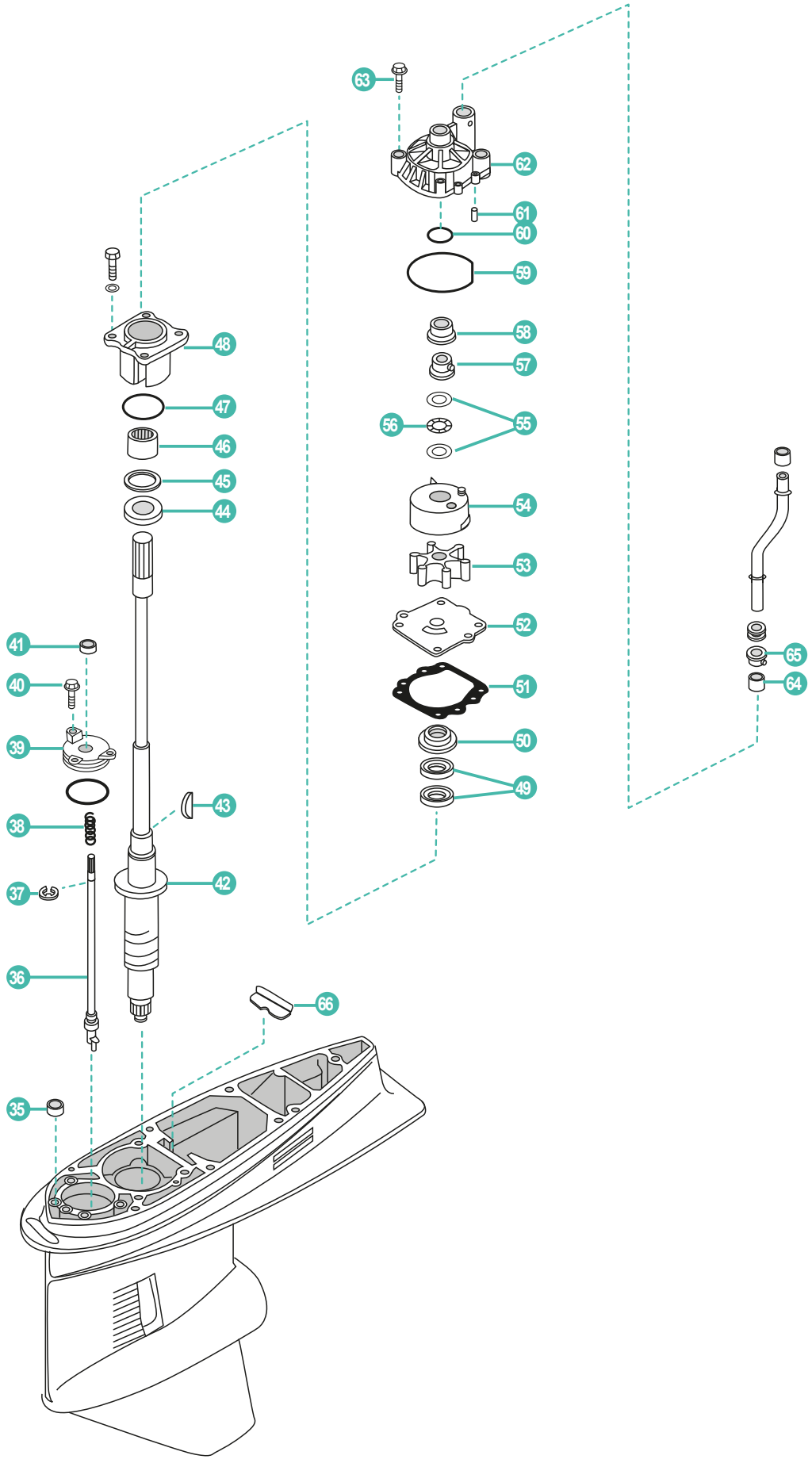
63
62
61
60
59
58
57
56
55
54
53
52
51
50
49
48
47
46
45
44
41
40
39
38
37
36
43
42
66
35
65
64

	REF	OEM				
35	REC663-44366-00	663-44366-00	GOMA	SEAL	GOMMA	BAGUE
36	REC60V-44150-00	60V-44150-00	EJE	SHIFT SHAFT	ASSE	LEVIER DE VITESSE
37	REC99001-08600-00	99001-08600	CLIP	CLIP	CLIP	CLAVETTE
38	REC90501-11M10-00	90501-11M10	MUELLE	SPRING	MOLLA	RESSORT
39	REC61A-45321-01	61A-45321-01	TAPA	SHIFT SHAFT COVER	COPERCHIO ASSE	COUVERCLE
40	REC90119-06M10	90119-06M10	TORNILLO	BOLT	VITE	VIS
41	REC93106-09014	93106-09014	RETÉN	SEAL, SHIFT ROD	BOCCOLA	JOINT
	REC66K-45501-00	66K-45501-00	EJE 20"	DRIVE SHAFT, 20"	ASSE VERTICALE 20"	ARBRE VERTICAL 20"
42	REC61A-45501-20	61A-45501-20	EJE 25"	DRIVE SHAFT, 25"	ASSE VERTICALE 25"	ARBRE VERTICAL 25"
	REC61A-45501-30	61A-45501-30	EJE 30"	DRIVE SHAFT, 30"	ASSE VERTICALE 30"	ARBRE VERTICAL 30"
43	REC90280-04M05	90280-04M05	CHAVETA	WOODRUFF KEY	CHIAVETTA	CLAVETTE
44	REC93341-93020	93341-93020	GRUESO RODAMIENTO	THRUST BEARING	SPESSORE CUSCINETTO	CALE
45	REC61A-45587-00/60-0	61A-45587-00/60	ESPACIADOR	SHIM KIT	SPESSORE	ENTRETOISE
46	REC93317-330U2	93317-330U2	RODAMIENTO	BEARING	CUSCINETTO	ROULEMENT
47	REC93210-54534	93210-54534	ARO TÓRICO	O-RING	O-RING	JOINT TORIQUE
48	REC61A-45331-00-94	61A-45331-00-94	CUERPO EJE	DRIVE SHAFT BEARING HOUSING	CORPO ASSE	PALIER DE ROULEMENT
49	REC93101-28M16	93101-28M16	RETÉN	DRIVE SHAFT SEAL	BOCCOLA	JOINT SPI
50	REC6E5-45344-00	6E5-45344-00	RETÉN	COVER, DRIVE SHAFT SEALS	BOCCOLA	COUVERCLE DE JOINT SPI
51	REC6E5-44315-A0	6E5-44315-A0	JUNTA BASE	BASE GASKET	GUARNIZIONE	JOINT
52	REC6G5-44323-00	6G5-44323-00	BASE BOMBA	WEAR PLATE	BASE POMPA	PLAQUE DE POMPE À EAU
53	REC6E5-44352-01	6E5-44352-01	TURBINA	IMPELLER	GIRANTE	TURBINE
54	REC61A-44322-02	61A-44322-02	CASQUILLO INOX.	WATER PUMP LINER	BOCCOLA	INSERT DE POMPE À EAU
55	REC90201-22M01	90201-22M01	ARANDELA	WASHER	RONDELLA	RONDELLE
56	REC90206-22M19	90206-22M19	TÓRICA	WAVE WASHER	GUARNIZIONE	JOINT TORIQUE
57	REC61A-45538-00	61A-45538-00	ESPACIADOR	SPACER	DISTANZIALE	ENTRETOISE
58	REC61A-45527-00	61A-45527-00	COLLAR	COLLAR	COLLAR	BAGUE
59	REC93210-86M38	93210-86M38	ARO TÓRICO	O-RING	O-RING	JOINT TORIQUE
60	REC93210-37M67	93210-37M67	ARO TÓRICO	O-RING	O-RING	JOINT TORIQUE
61	REC93606-12019	93606-12019	PASADOR CENTRAL	ALIGNMENT PIN	SPINOTTO	PIN
62	REC61A-44311-00	61A-44311-00	CUERPO BOMBA AGUA	WATER PUMP HOUSING	CORPO POMPA ACQUA	CORPS DE POMPE À EAU
63	REC90119-08M14	90119-08M14	TORNILLO CON ARANDELA	BOLT WITH WASHER	VITE	VIS
64	REC6E5-44365-00	6E5-44365-00	CASQUILLO JUNTA	DAMPER, WATER TUBE	BOCCOLA TUBO	BAGUE
65	REC6E5-44312-00	6E5-44312-00	TAPA	OVER	TAPPO	BAGUE
66	REC61A-45376-00-94	61A-45376-00-94	GUÍA	GUIDE	GUIDE	GUIDE

2T STROKES VZ200 (2005-09) • VZ225 (2003-09) • VZ250 (2003-09) • VZ300 (2004-09)

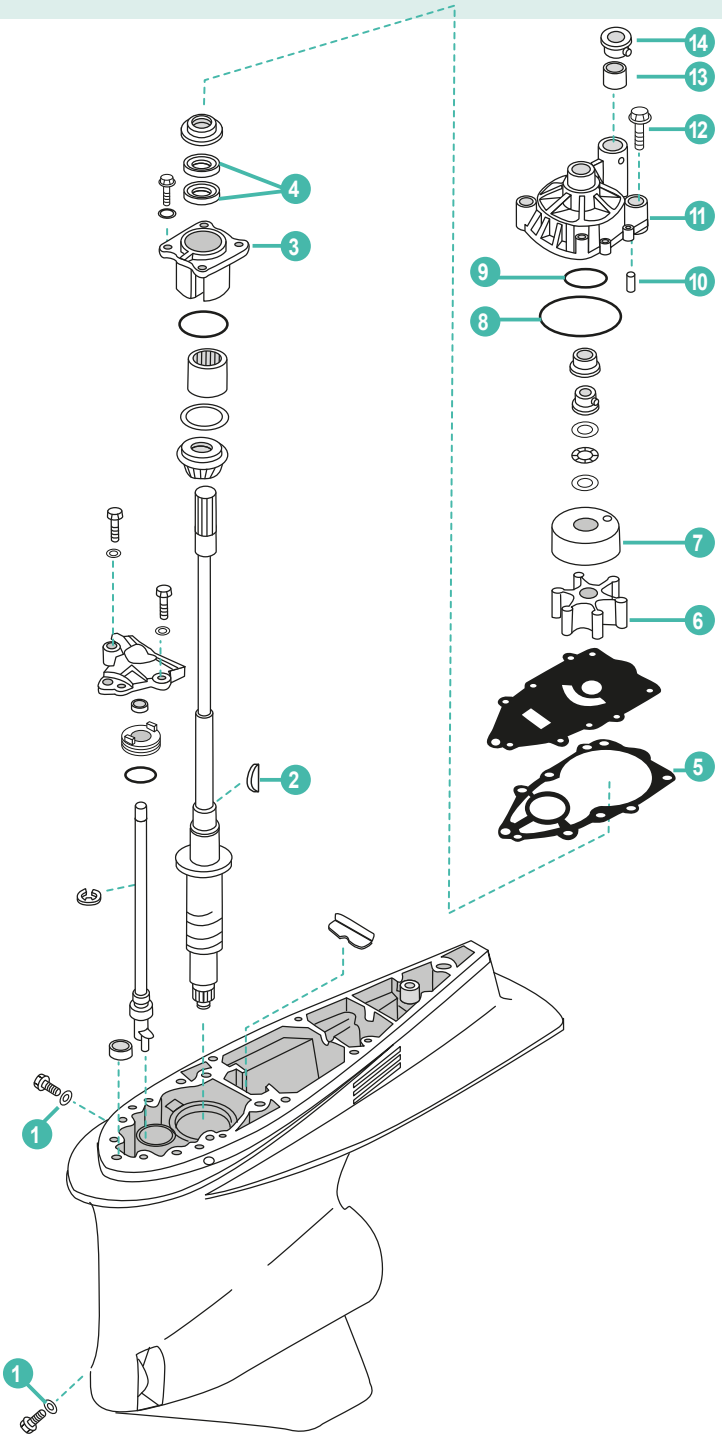



REF
REC80W90U3
REC80W90U6
RECGREU1
RECGREU12

P. 43

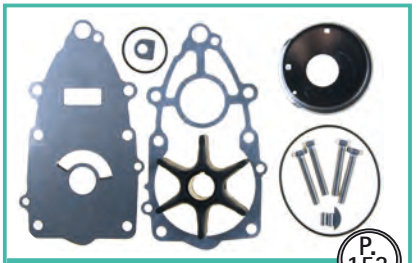

REF	OEM
REC60X-W0078-00	60X-W0078-00

P. 153

	REF	OEM				
1	REC90430-08020	93430-08020	JUNTA	GASKET, DRAIN FILL	GUARNIZIONE	JOINT
2	REC90280-04M05	90280-04M05	CHAVETA	KEY, WOODRUFF	CHIAVETTA	CLAVETTE
3	REC61A-45331-00-94	61A-45331-00-94	CUERPO COJINETE EJE	DRIVE SHAFT BEARING HOUSING	CORPO CUSCINETTO	PALIER DE ROULEMENT
4	REC93101-28M16	93101-28M16	RETÉN	OIL SEAL	PARAOLIO	JOINT SPI
5	REC60X-44315-A0	60X-44315-A0	JUNTA	GASKET	GUARNIZIONE	JOINT
6	REC6E5-44352-01	6E5-44352-01	IMPULSOR	IMPELLER	GIRANTE	TURBINE
7	REC61A-44322-02	61A-44322-02	CASQUILLO INOX.	PUMP CUP	BOCCOLA INOX.	INSERT DE POMPE À EAU
8	REC93210-86M38	93210-86M38	ARO TÓRICO	O-RING	O-RING	JOINT TORIQUE
9	REC93210-37M67	93210-37M67	ARO TÓRICO	O-RING	O-RING	JOINT TORIQUE
10	REC93606-12019	93606-42019	PASADOR	PIN, DOWELL	SPINOTTO	PIN
11	REC61A-44311-00	61A-44311-01	CUERPO BOMBA AGUA	WATER PUMP HOUSING	CORPO POMPA ACQUA	CORPS DE POMPE À EAU
12	REC90119-08M14	90119-08M14	TORNILLO CON ARANDELA	BOLT W WASHER	VITE	VIS
13	REC6E5-44365-00	6E5-44365-00	CASQUILLO GOMA	DAMPER	BOCCOLA GOMMA	BAGUE
13	REC6E5-44312-00	6E5-44312-00	TAPA CUERPO BOMBA AGUA	COVER, WATER PUMP HOUSING	COPERCHIO CORPO POMPA	COUVERCLE

GUÍA PIEZAS COLA STERN DRIVE COMPONENTS GUIDE GUIDA RICAMBI PIEDI GUIDE PIECES D'EMBASE









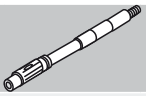


2B	1981-03	REC646-45551-00	REC646-45560-00							
4A	1985-87	REC6E0-45551-00	REC6E0-45560-00	REC6E0-45570-00	REC6E0-45631-00				PAF4-03050001	REC6E0-45511-01
4AC	1987-99	REC6E0-45551-00	REC6E0-45560-00	REC6E0-45570-00	REC6E0-45631-00				PAF4-03050001	REC6E0-45511-01
4AC MHL 4AC MHS	2001-03	REC6E0-45551-00	REC6E0-45560-00	REC6E0-45570-00	REC6E0-45631-00				PAF4-03050001	REC6E0-45511-11
4AS	1987-96	REC6E0-45551-00	REC6E0-45560-00	REC6E0-45570-00	REC6E0-45631-00				PAF4-03050001	REC6E0-45511-01
4BC	1998-99	REC6E0-45551-00	REC6E0-45560-00	REC6E0-45570-00	REC6E0-45631-00				PAF4-03050001	REC6E0-45511-01
4BC	1999	REC6E0-45551-00	REC6E0-45560-00	REC6E0-45570-00	REC6E0-45631-00				PAF4-03050001	REC6E0-45511-01
4BC MHL 4BC MHS	2001-03	REC6E0-45551-00	REC6E0-45560-00	REC6E0-45570-00	REC6E0-45631-00				PAF4-03050001	REC6E0-45511-11
F4A	1998-00	REC6E0-45551-00	PAF4-03010000	PAF4-03040000					PAF4-03050001	REC6E0-45511-11
F4A MH F4A MHL	2000	REC6E0-45551-00	PAF4-03010000	PAF4-03040000					PAF4-03050001	REC6E0-45511-11
F4A MHS	2001	REC6E0-45551-00	PAF4-03010000	PAF4-03040000					PAF4-03050001	REC6E0-45511-11
5C	1985-99	REC6E0-45551-00	REC6E0-45560-00	REC6E0-45570-00	REC6E0-45631-00				PAF4-03050001	REC6E0-45511-01
5C MHL 5C MHS	2001-06	REC6E0-45551-00	REC646-45560-00	REC6E0-45570-00	REC6E0-45631-00				PAF4-03050001	REC6E0-45511-11
5CS	1987-96	REC6E0-45551-00	REC646-45560-00	REC6E0-45570-00	REC6E0-45631-00					REC6E0-45511-01
6C	1990-98	REC6N0-G5551-00	REC6N0-G5560-00	REC6N0-G5571-00	REC6G1-45631-00		REC6G1-45611-01			
6C MHL 6C MHS	2001-06	REC6N0-G5551-00	REC6N0-G5560-00	REC6N0-G5571-00	REC6G1-45631-00		REC6G1-45611-01			
6C WHL 6C WHS	2001	REC6N0-G5551-00	REC6N0-G5560-00	REC6N0-G5571-00	REC6G1-45631-00		REC6G1-45611-01			
6D	1990-98	REC6N0-G5551-00	REC6N0-G5560-00	REC6N0-G5571-00	REC6G1-45631-00		REC6G1-45611-01			
6D MHL 6D MHS	2001-06	REC6N0-G5551-00	REC6N0-G5560-00	REC6N0-G5571-00	REC6G1-45631-00		REC6G1-45611-01			
6D WHS	2001	REC6N0-G5551-00	REC6N0-G5560-00	REC6N0-G5571-00	REC6G1-45631-00		REC6G1-45611-01			
8C	1990-98	REC6N0-G5551-00	REC6N0-G5560-00	REC6N0-G5571-00	REC6G1-45631-00		REC6G1-45611-01			
8C MHL 8C MHS	2001-06	REC6N0-G5551-00	REC6N0-G5560-00	REC6N0-G5571-00	REC6G1-45631-00		REC6G1-45611-01			
8C MHX	2001-03	REC6N0-G5551-00	REC6N0-G5560-00	REC6N0-G5571-00	REC6G1-45631-00		REC6G1-45611-01			
8C WHL 8C WHS	2001-03	REC6N0-G5551-00	REC6N0-G5560-00	REC6N0-G5571-00	REC6G1-45631-00		REC6G1-45611-01			
E8D	1997-98	REC647-45551-00	REC647-45560-00	REC647-45570-00						
E8D MH	1999	REC647-45551-00	REC647-45560-00	REC647-45570-00						
F8A	1986-89				REC682-45631-00	REC648-45633-00				
F8B	1985-99	REC6E7-45551-00	REC6E7-45560-01	REC6E7-45570-00	REC682-45631-00	REC648-45633-00	REC683-45611-00			
F8B E F8B EH F8B MH	1999	REC6E7-45551-00	REC6E7-45560-01	REC6E7-45570-00	REC682-45631-00	REC648-45633-00	REC683-45611-00			
FT8D EL	2001-04					REC648-45633-00	REC683-45611-00			REC69G-45510-20
FT8D EPL	2001-04					REC648-45633-00	REC683-45611-00			REC69G-45510-10
FT8D EPX	2001-02					REC648-45633-00	REC683-45611-00			REC69G-45510-10
FT8D EX	2001-04					REC648-45633-00	REC683-45611-00			REC69G-45510-20
FT8D MHL FT8D MHX	2001-04					REC648-45633-00	REC683-45611-00			REC69G-45510-10
9.9D	1985-89	REC6E7-45551-00	REC6E7-45560-01	REC6E7-45570-00	REC682-45631-00	REC648-45633-00	REC683-45611-00			REC69G-45510-20
9.9D	1990-95	REC6E7-45551-00	REC6E7-45560-01	REC6E7-45570-00	REC682-45631-00	REC648-45633-00	REC683-45611-00	REC683-45361-02-4D		REC6E7-45501-11
9.9F	1995-99	REC63V-45551-00	REC6E7-45560-01	REC6E7-45570-00	REC682-45631-00	REC648-45633-00	REC683-45611-00	REC683-45361-02-4D		REC63V-45510-01 REC63V-45501-10
9.9F MH	2000	REC63V-45551-00	REC6E7-45560-01	REC6E7-45570-00	REC682-45631-00	REC648-45633-00	REC683-45611-00	REC683-45361-02-4D		REC63V-45510-01 REC63V-45510-11
9.9F MHL 9.9F MHS	2001-06	REC63V-45551-00	REC6E7-45560-01	REC6E7-45570-00	REC682-45631-00	REC648-45633-00	REC683-45611-00	REC683-45361-02-4D		REC63V-45510-01 REC63V-45510-11
9.9F WC 9.9F WH	2000	REC63V-45551-00	REC6E7-45560-01	REC6E7-45570-00	REC682-45631-00	REC648-45633-00	REC683-45611-00	REC683-45361-02-4D		REC63V-45510-01 REC63V-45510-11
9.9F WHL 9.9F WHS	2001	REC63V-45551-00	REC6E7-45560-01	REC6E7-45570-00	REC682-45631-00	REC648-45633-00	REC683-45611-00	REC683-45361-02-4D		REC63V-45510-01 REC63V-45510-11
F9.9B	1985-97	REC6E7-45551-00	REC6E7-45560-01	REC6E7-45570-00	REC682-45631-00	REC648-45633-00	REC683-45611-00	REC683-45361-02-4D		
F9.9B E	1999	REC6E7-45551-00	REC6E7-45560-01	REC6E7-45570-00	REC682-45631-00	REC648-45633-00	REC683-45611-00	REC683-45361-02-4D		
F9.9B EH	1999	REC6E7-45551-00	REC6E7-45560-01	REC6E7-45570-00	REC682-45631-00		REC683-45611-00	REC683-45361-02-4D		
F9.9B MH	1999	REC6E7-45551-00	REC6E7-45560-01	REC6E7-45570-00	REC682-45631-00	REC648-45633-00	REC683-45611-00	REC683-45361-02-4D		
F9.9C	1998	REC63V-45551-00	REC6E7-45560-01	REC6E7-45570-00	REC682-45631-00	REC648-45633-00	REC683-45611-00	REC683-45361-02-4D		REC63V-45510-01 REC63V-45510-11
F9.9C E	2000	REC63V-45551-00	REC6E7-45560-01	REC6E7-45570-00	REC682-45631-00	REC648-45633-00	REC683-45611-00	REC683-45361-02-4D		REC63V-45510-01 REC63V-45510-11
F9.9C EH	2000	REC63V-45551-00	REC6E7-45560-01	REC6E7-45570-00	REC682-45631-00	REC648-45633-00	REC683-45611-00	REC683-45361-02-4D		REC63V-45510-01 REC63V-45510-11
F9.9C EL F9.9C ES	2001-06	REC63V-45551-00	REC6E7-45560-01	REC6E7-45570-00	REC682-45631-00	REC648-45633-00	REC683-45611-00	REC683-45361-02-4D		REC63V-45510-01 REC63V-45510-11
F9.9C MH	2000	REC63V-45551-00	REC6E7-45560-01	REC6E7-45570-00	REC682-45631-00	REC648-45633-00	REC683-45611-00	REC683-45361-02-4D		REC63V-45510-01 REC63V-45510-11
F9.9C MHL F9.9C MHS	2001-06	REC63V-45551-00	REC6E7-45560-01	REC6E7-45570-00	REC682-45631-00	REC648-45633-00	REC683-45611-00	REC683-45361-02-4D		REC63V-45510-01 REC63V-45510-11
FT9.9A	1999				REC682-45631-00	REC648-45633-00				
FT9.9D	1999				REC682-45631-00	REC648-45633-00	REC683-45611-00			
FT9.9D E FT9.9D EH	2000				REC682-45631-00	REC648-45633-00	REC683-45611-00			
FT9.9D EHL FT9.9D EHX	2001				REC682-45631-00	REC648-45633-00	REC683-45611-00			







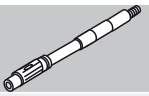



FT9.9D EL	2001-06				REC682-45631-00	REC648-45633-00	REC683-45611-00			
FT9.9D EP	2000				REC682-45631-00	REC648-45633-00				
FT9.9D EPL FT9.9D EPX	2001-02				REC682-45631-00	REC648-45633-00	REC683-45611-00			
FT9.9D ES	2001				REC682-45631-00	REC648-45633-00	REC683-45611-00			
FT9.9D EX	2001-06				REC682-45631-00	REC648-45633-00	REC683-45611-00			
FT9.9D MH	2000				REC682-45631-00	REC648-45633-00	REC683-45611-00			
FT9.9D MHL FT9.9D MHX	2001-06				REC682-45631-00	REC648-45633-00	REC683-45611-00			
13.5A	1999	REC63V-45551-00	REC6E7-45560-01	REC6E7-45570-00	REC682-45631-00	REC648-45633-00	REC683-45611-00	REC683-45361-02-4D	REC63V-45510-01 REC63V-45510-11	
13.5A MH	2000	REC63V-45551-00	REC6E7-45560-01	REC6E7-45570-00	REC682-45631-00	REC648-45633-00	REC683-45611-00	REC683-45361-02-4D	REC63V-45510-01 REC63V-45510-11	
13.5A MHL 13.5A MHS	2001-04	REC63V-45551-00	REC6E7-45560-01	REC6E7-45570-00	REC682-45631-00	REC648-45633-00	REC683-45611-00	REC683-45361-02-4D	REC63V-45510-01 REC63V-45510-11	
13.5A WH	2000	REC63V-45551-00	REC6E7-45560-01	REC6E7-45570-00	REC682-45631-00	REC648-45633-00	REC683-45611-00	REC683-45361-02-4D	REC63V-45510-01 REC63V-45510-11	
F13.5A EHL	2005-06	REC63V-45551-00	REC6E7-45560-01	REC6E7-45570-00	REC682-45631-00	REC648-45633-00	REC683-45611-00	REC683-45361-02-4D	REC63V-45510-01 REC63V-45510-11	
F13.5A EPL F13.5A EHS	2005	REC63V-45551-00	REC6E7-45560-01	REC6E7-45570-00	REC682-45631-00	REC648-45633-00	REC683-45611-00	REC683-45361-02-4D	REC63V-45510-01 REC63V-45510-11	
F13.5A MH	2001	REC63V-45551-00	REC6E7-45560-01	REC6E7-45570-00	REC682-45631-00		REC683-45611-00	REC683-45361-02-4D	REC63V-45510-01 REC63V-45510-11	
F13.5A MHL F13.5A MHS	2002-06	REC63V-45551-00	REC6E7-45560-01	REC6E7-45570-00	REC682-45631-00	REC648-45633-00	REC683-45611-00	REC683-45361-02-4D	REC63V-45510-01 REC63V-45510-11	
15D	1985-89	REC6E7-45551-00	REC6E7-45560-01	REC6E7-45570-00	REC682-45631-00	REC648-45633-00	REC683-45611-00			
15D	1990-95	REC6E7-45551-00	REC6E7-45560-01	REC6E7-45570-00	REC682-45631-00	REC648-45633-00	REC683-45611-00	REC683-45361-02-4D	REC6E7-45501-11	
15F	1995-99	REC63V-45551-00	REC6E7-45560-01	REC6E7-45570-00	REC682-45631-00	REC648-45633-00	REC683-45611-00	REC683-45361-02-4D	REC63V-45510-01 REC63V-45501-10	
15F MH	2000	REC63V-45551-00	REC6E7-45560-01	REC6E7-45570-00	REC682-45631-00	REC648-45633-00	REC683-45611-00	REC683-45361-02-4D	REC63V-45510-01 REC63V-45510-11	
15F MHL 15F MHS	2001-06	REC63V-45551-00	REC6E7-45560-01	REC6E7-45570-00	REC682-45631-00	REC648-45633-00	REC683-45611-00	REC683-45361-02-4D	REC63V-45510-01 REC63V-45510-11	
15F WC	2000	REC63V-45551-00	REC6E7-45560-01	REC6E7-45570-00	REC682-45631-00	REC648-45633-00	REC683-45611-00	REC683-45361-02-4D	REC63V-45510-01 REC63V-45510-11	
15F WCL	2001-03	REC63V-45551-00	REC6E7-45560-01	REC6E7-45570-00	REC682-45631-00	REC648-45633-00	REC683-45611-00	REC683-45361-02-4D	REC63V-45510-01 REC63V-45510-11	
15F WCS	2001-02	REC63V-45551-00	REC6E7-45560-01	REC6E7-45570-00	REC682-45631-00	REC648-45633-00	REC683-45611-00	REC683-45361-02-4D	REC63V-45510-01 REC63V-45510-11	
F15A	1998	REC63V-45551-00	REC6E7-45560-01	REC6E7-45570-00	REC682-45631-00	REC648-45633-00	REC683-45611-00	REC683-45361-02-4D	REC63V-45510-01 REC63V-45510-11	
F15A E F15A EH	1998-00	REC63V-45551-00	REC6E7-45560-01	REC6E7-45570-00	REC682-45631-00	REC648-45633-00	REC683-45611-00	REC683-45361-02-4D	REC63V-45510-01 REC63V-45510-11	
F15A EHS F15A EHL	2001-06	REC63V-45551-00	REC6E7-45560-01	REC6E7-45570-00	REC682-45631-00	REC648-45633-00	REC683-45611-00	REC683-45361-02-4D	REC63V-45510-01 REC63V-45510-11	
F15A EL	2001-06	REC63V-45551-00	REC6E7-45560-01	REC6E7-45570-00	REC682-45631-00	REC648-45633-00	REC683-45611-00	REC683-45361-02-4D	REC63V-45510-01 REC63V-45510-11	
F15A EP	2000	REC63V-45551-00	REC6E7-45560-01	REC6E7-45570-00	REC682-45631-00	REC648-45633-00		REC683-45361-02-4D		
F15A EPL F15A EPS	2001-06	REC63V-45551-00	REC6E7-45560-01	REC6E7-45570-00	REC682-45631-00	REC648-45633-00	REC683-45611-00	REC683-45361-02-4D		
F15A ES	2001-06	REC63V-45551-00	REC6E7-45560-01	REC6E7-45570-00	REC682-45631-00	REC648-45633-00	REC683-45611-00	REC683-45361-02-4D	REC63V-45510-01 REC63V-45510-11	
F15A MH	1998-00	REC63V-45551-00	REC6E7-45560-01	REC6E7-45570-00	REC682-45631-00	REC648-45633-00	REC683-45611-00	REC683-45361-02-4D	REC63V-45510-01 REC63V-45510-11	
F15A MHL F15A MHS	2001-06	REC63V-45551-00	REC6E7-45560-01	REC6E7-45570-00	REC682-45631-00	REC648-45633-00	REC683-45611-00	REC683-45361-02-4D	REC63V-45510-01 REC63V-45510-11	
20C	1985	REC689-45551-00	REC689-45560-00	REC689-45571-00-00	REC664-45631-00	REC648-45633-00	REC689-45611-00		REC689-45501-10	
20C	1986-93	REC63V-45551-00	REC689-45560-00	REC689-45571-00-00	REC664-45631-00	REC648-45633-00	REC689-45611-00		REC689-45501-10	
20C M	1990-97	REC63V-45551-00	REC689-45560-00	REC689-45571-00-00	REC664-45631-00	REC648-45633-00	REC689-45611-00		REC689-45501-10	
20C MH	1998	REC63V-45551-00	REC689-45560-00	REC689-45571-00-00	REC664-45631-00	REC648-45633-00	REC689-45611-00		REC689-45501-10	
20C MHL	2001-02	REC63V-45551-00	REC689-45560-00	REC689-45571-00-00	REC664-45631-00	REC648-45633-00	REC689-45611-00		REC689-45501-10	
20C MHS	2001-02	REC63V-45551-00	REC689-45560-00	REC689-45571-00-00	REC664-45631-00	REC648-45633-00	REC689-45611-00			
20D	1988-98					REC648-45633-00	REC6L2-45611-00			
20D MHOL 20D MHOS	2001-06					REC648-45633-00	REC6L2-45611-00			
20D WOL 20D WOS	2001+					REC648-45633-00	REC6L2-45611-00			
F20A	1998-99	REC61N-45551-00	REC61N-45560-10	REC61N-45570-00	REC664-45631-00	REC648-45633-00	REC6L2-45611-00	PAF25-04070000	REC61N-45510-10	
F20A E F20A EH	2000	REC61N-45551-00	REC61N-45560-10	REC61N-45570-00	REC664-45631-00	REC648-45633-00	REC6L2-45611-00	PAF25-04070000	REC61N-45510-00	
F20A EH	2000	REC61N-45551-00	REC61N-45560-10	REC61N-45570-00	REC664-45631-00	REC648-45633-00	REC6L2-45611-00	PAF25-04070000	REC61N-45510-00	
F20A EL	2001	REC61N-45551-00	REC61N-45560-10	REC61N-45570-00	REC664-45631-00	REC648-45633-00	REC6L2-45611-00	PAF25-04070000	REC61N-45510-10	
F20A ES	2006	REC61N-45551-00	REC61N-45560-10	REC61N-45570-00	REC664-45631-00	REC648-45633-00	REC6L2-45611-00	PAF25-04070000	REC61N-45510-10	
F20A ET	2000	REC61N-45551-00	REC61N-45560-10	REC61N-45570-00	REC664-45631-00	REC648-45633-00	REC6L2-45611-00	PAF25-04070000	REC61N-45510-00	
F20A ETL	2006	REC61N-45551-00	REC61N-45560-10	REC61N-45570-00	REC664-45631-00	REC648-45633-00	REC6L2-45611-00	PAF25-04070000	REC61N-45510-10	
F20A MH	2000	REC61N-45551-00	REC61N-45560-10	REC61N-45570-00	REC664-45631-00	REC648-45633-00	REC6L2-45611-00	PAF25-04070000	REC61N-45510-00	
F20A MHL	2000	REC61N-45551-00	REC61N-45560-10	REC61N-45570-00	REC664-45631-00	REC648-45633-00	REC6L2-45611-00	PAF25-04070000	REC61N-45510-10	
F20A MHS	2001	REC61N-45551-00	REC61N-45560-10	REC61N-45570-00	REC664-45631-00	REC648-45633-00	REC6L2-45611-00	PAF25-04070000	REC61N-45510-10	
25B	1994-95	REC6K5-45551-00	REC6K5-45560-00		REC664-45631-00	REC648-45633-00	REC697-45611-00	REC688-45331-00-94		
25B MHL	2001-06	REC61N-45551-00	REC61N-45560-10	REC61N-45570-00	REC664-45631-00	REC648-45633-00	REC6L2-45611-00	PAF25-04070000	REC61N-45510-10	
25B MHS	2001-06	REC61N-45551-00	REC61N-45560-10	REC61N-45570-00	REC664-45631-00	REC648-45633-00	REC6L2-45611-00	PAF25-04070000	REC61N-45510-00	
25B WCS	2001-02	REC61N-45551-00	REC61N-45560-10	REC61N-45570-00	REC664-45631-00	REC648-45633-00	REC6L2-45611-00	PAF25-04070000	REC61N-45510-10	
25D	1985-87	REC689-45551-00	REC689-45560-00	REC689-45571-00-00	REC664-45631-00	REC648-45633-00	REC689-45611-00	PAF25-04070000		
25D M	1990-97	REC689-45551-00	REC689-45560-00	REC689-45571-00-00	REC664-45631-00	REC648-45633-00	REC689-45611-00	PAF25-04070000		






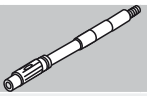



25D MH	1998	REC689-45551-00	REC689-45560-00	REC689-45571-00-00	REC664-45631-00	REC648-45633-00		PAF25-04070000	REC689-45501-10
25D MHL 25D MHS	2001	REC689-45551-00	REC689-45560-00	REC689-45571-00-00	REC664-45631-00	REC648-45633-00		PAF25-04070000	
25J	1987-91					REC648-45633-00		PAF25-04070000	
25J	1992-00					REC648-45633-00		PAF25-04070000	
25N	1988					REC648-45633-00	REC6L2-45611-00	PAF25-04070000	
25N MHOL 25N MHOS	2001-06					REC648-45633-00	REC6L2-45611-00	PAF25-04070000	
25N WOL 25N WOS	2001-03					REC648-45633-00	REC6L2-45611-00	PAF25-04070000	
25Q	1988-94	REC6H4-45551-00	REC6H4-45560-00	REC6H4-45570-00	REC663-45631-00	REC648-45633-00	REC679-45611-00	PAF25-04070000	
25V	1996	REC61N-45551-00	REC61N-45560-10	REC61N-45570-00	REC664-45631-00	REC648-45633-00	REC6L2-45611-00	PAF25-04070000	REC61N-45510-10
25V	1996-98	REC61N-45551-00	REC61N-45560-10	REC61N-45570-00	REC664-45631-00	REC648-45633-00	REC6L2-45611-00	PAF25-04070000	REC61N-45510-10
25V MHL 25V MHS	2001	REC61N-45551-00	REC61N-45560-10	REC61N-45570-00	REC664-45631-00	REC648-45633-00	REC6L2-45611-00	PAF25-04070000	REC61N-45510-10
25V WCS	2001	REC61N-45551-00	REC61N-45560-10	REC61N-45570-00	REC664-45631-00	REC648-45633-00	REC6L2-45611-00	PAF25-04070000	REC61N-45510-10
F25A E F25A EH	2000	REC61N-45551-00	REC61N-45560-10	REC61N-45570-00	REC664-45631-00	REC648-45633-00	REC6L2-45611-00	PAF25-04070000	REC61N-45510-10
F25A EHL	2001-02	REC61N-45551-00	REC61N-45560-10	REC61N-45570-00	REC664-45631-00	REC648-45633-00	REC6L2-45611-00	PAF25-04070000	REC61N-45510-10
F25A EHS	2001	REC61N-45551-00	REC61N-45560-10	REC61N-45570-00	REC664-45631-00	REC648-45633-00	REC6L2-45611-00	PAF25-04070000	REC61N-45510-10
F25A EL F25A ES	2001-06	REC61N-45551-00	REC61N-45560-10	REC61N-45570-00	REC664-45631-00	REC648-45633-00	REC6L2-45611-00	PAF25-04070000	REC61N-45510-10
F25A ET	2000	REC61N-45551-00	REC61N-45560-10	REC61N-45570-00	REC664-45631-00	REC648-45633-00	REC6L2-45611-00	PAF25-04070000	REC61N-45510-10
F25A ETL	2001-06	REC61N-45551-00	REC61N-45560-10	REC61N-45570-00	REC664-45631-00	REC648-45633-00	REC6L2-45611-00	PAF25-04070000	REC61N-45510-10
F25A MH	2000	REC61N-45551-00	REC61N-45560-10	REC61N-45570-00	REC664-45631-00	REC648-45633-00	REC6L2-45611-00	PAF25-04070000	REC61N-45510-10
F25A MHL F25A MHS	2001-06	REC61N-45551-00	REC61N-45560-10	REC61N-45570-00	REC664-45631-00	REC648-45633-00	REC6L2-45611-00	PAF25-04070000	REC61N-45510-10
FT25B ED	2000						REC66T-45611-00	REC63D-45361-02-4D	
FT25B EDL FT25B EDX	2001-02						REC66T-45611-00	REC63D-45361-02-4D	
FT25B ET	2000						REC66T-45611-00	REC63D-45361-02-4D	
FT25B ETL	2001-06						REC66T-45611-00	REC63D-45361-02-4D	
FT25B ETX	2001-02						REC66T-45611-00	REC63D-45361-02-4D	
30A	1985	REC689-45551-00	REC689-45560-00	REC689-45571-00-00	REC664-45631-00	REC648-45633-00	REC689-45611-00		
30A M	1990-92	REC689-45551-00	REC689-45560-00	REC689-45571-00-00	REC664-45631-00	REC648-45633-00	REC689-45611-00		REC689-45501-10
30D	1986-00					REC648-45633-00			
30D EOL 30D EOS 30D ETOL 30D MHOL 30D MHOS	2001-06					REC648-45633-00			
30D OL	2001-03					REC648-45633-00			
30D EOS	2001-06					REC648-45633-00			
30G	1996	REC61N-45551-00	REC61N-45560-10	REC61N-45570-00	REC664-45631-00	REC648-45633-00	REC6L2-45611-00	PAF25-04070000	REC61N-45510-00
30G	1996-98	REC61N-45551-00	REC61N-45560-10	REC61N-45570-00	REC664-45631-00	REC648-45633-00	REC6L2-45611-00	PAF25-04070000	REC61N-45510-00
30G MHS 30G WCS	2001	REC61N-45551-00	REC61N-45560-10	REC61N-45570-00		REC648-45633-00	REC6L2-45611-00	PAF25-04070000	REC61N-45510-00
30H MHS	2001-02	REC61N-45551-00	REC61N-45560-10	REC61N-45570-00	REC664-45631-00	REC648-45633-00	REC6L2-45611-00	PAF25-04070000	REC61N-45510-00
30H WCS	2001-02	REC61N-45551-00	REC61N-45560-10	REC61N-45570-00	REC664-45631-00	REC648-45633-00	REC6L2-45611-00	PAF25-04070000	REC61N-45510-10
F30A ETL	2001-06	REC66T-45551-00	REC66T-45560-00	REC66T-45571-00	REC66T-45631-00		REC66T-45611-00	REC63D-45361-02-4D	REC67C-45501-10
F30A ETS	2001-06	REC66T-45551-00	REC66T-45560-00	REC66T-45571-00	REC66T-45631-00		REC66T-45611-00	REC63D-45361-02-4D	REC67C-45501-00
F30A MHDL	2001-06	REC66T-45551-00	REC66T-45560-00	REC66T-45571-00	REC66T-45631-00		REC66T-45611-00	REC63D-45361-02-4D	REC67C-45501-10
F30A MHDS	2001-06	REC66T-45551-00	REC66T-45560-00	REC66T-45571-00	REC66T-45631-00		REC66T-45611-00	REC63D-45361-02-4D	REC67C-45501-00
E40G WH	2003	REC6F5-45551-00	REC6F5-45560-00	REC6F5-45570-00	REC663-45631-00	REC663-45633-00	REC6F6-45611-00	REC63D-45361-02-4D	REC676-45501-10
40H	1985-90	REC6H4-45551-00	REC6H4-45560-00	REC6H4-45570-00	REC6H4-45631-00	REC663-45633-00	REC679-45611-00		
40H	1991-93	REC6H4-45551-00	REC6H4-45560-00	REC6H4-45570-00	REC6H4-45631-00	REC663-45633-00	REC679-45611-00		
40Q	1993-98	REC6H9-45551-00	REC679-45560-00	REC677-41112-A0	REC663-45631-00	REC663-45633-00	REC679-45611-00		REC679-45501-10
40Q E	1992	REC6H9-45551-00	REC679-45560-00	REC677-41112-A0	REC663-45631-00	REC663-45633-00	REC679-45611-00		REC679-45501-10
40Q M	1990-92	REC6H9-45551-00	REC679-45560-00	REC677-41112-A0	REC663-45631-00	REC663-45633-00	REC679-45611-00		REC679-45501-10
40R MHO	2000	REC6H4-45551-00	REC6H4-45560-00	REC6H4-45570-00		REC663-45633-00		REC63D-45361-02-4D	
40R ROS	2001	REC6H4-45551-00	REC6H4-45560-00	REC6H4-45570-00		REC663-45633-00		REC63D-45361-02-4D	
40V	1995-98	REC6H4-45551-00	REC6H4-45560-00	REC6H4-45570-00		REC663-45633-00		REC63D-45361-02-4D	
40V EO	2000	REC6H4-45551-00	REC6H4-45560-00	REC6H4-45570-00		REC663-45633-00		REC63D-45361-02-4D	
40V EOL 40V EOS	2001-06	REC6H4-45551-00	REC6H4-45560-00	REC6H4-45570-00		REC663-45633-00		REC63D-45361-02-4D	
40V ETO	2000	REC6H4-45551-00	REC6H4-45560-00	REC6H4-45570-00		REC663-45633-00		REC63D-45361-02-4D	
40V ETOL 40V ETOS	2001-03	REC6H4-45551-00	REC6H4-45560-00	REC6H4-45570-00		REC663-45633-00		REC63D-45361-02-4D	
40V MHOL 40V MHOS	2001-06	REC6H4-45551-00	REC6H4-45560-00	REC6H4-45570-00		REC663-45633-00		REC63D-45361-02-4D	
40V MO	2000	REC6H4-45551-00	REC6H4-45560-00	REC6H4-45570-00		REC663-45633-00		REC63D-45361-02-4D	
40X	1998	REC66T-45551-00	REC66T-45560-00	REC66T-45571-00	REC66T-45631-00	REC663-45633-00	REC66T-45611-00	REC63D-45361-02-4D	REC66T-45501-10
40X MH	2000	REC66T-45551-00	REC66T-45560-00	REC66T-45571-00	REC66T-45631-00	REC663-45633-00	REC66T-45611-00	REC63D-45361-02-4D	REC66T-45501-10
40X MHL	2001-06	REC66T-45551-00	REC66T-45560-00	REC66T-45571-00	REC66T-45631-00	REC663-45633-00	REC66T-45611-00	REC63D-45361-02-4D	REC66T-45501-10
40X MHS	2001-02	REC66T-45551-00	REC66T-45560-00	REC66T-45571-00	REC66T-45631-00	REC663-45633-00	REC66T-45611-00	REC63D-45361-02-4D	REC66T-45501-01
40X W	2000	REC66T-45551-00	REC66T-45560-00	REC66T-45571-00	REC66T-45631-00	REC663-45633-00	REC66T-45611-00	REC63D-45361-02-4D	REC66T-45501-10
40X WL 40X WS	2001	REC66T-45551-00	REC66T-45560-00	REC66T-45571-00	REC66T-45631-00	REC663-45633-00	REC66T-45611-00	REC63D-45361-02-4D	REC66T-45501-10







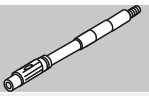



40X WT	2000	REC66T-45551-00	REC66T-45560-00	REC66T-45571-00	REC66T-45631-00	REC663-45633-00	REC66T-45611-00	REC63D-45361-02-4D	REC66T-45501-10
40X WTL	2001-03	REC66T-45551-00	REC66T-45560-00	REC66T-45571-00	REC66T-45631-00	REC663-45633-00	REC66T-45611-00	REC63D-45361-02-4D	REC66T-45501-10
40Y ETOL 40Y MHOS	2001-06	REC6H4-45551-00	REC6H4-45560-00	REC6H4-45570-00		REC663-45633-00		REC63D-45361-02-4D	
E40G MH	2003	REC6F5-45551-00	REC6F5-45560-00	REC6F5-45570-00	REC663-45631-00	REC663-45633-00	REC6F6-45611-00	REC676-45361-00	REC676-45501-10
E40G MHL	2003	REC6F5-45551-00	REC6F5-45560-00	REC6F5-45570-00	REC663-45631-00	REC663-45633-00	REC6F6-45611-00	REC676-45361-00	
E40G MHS	2003	REC6F5-45551-00	REC6F5-45560-00	REC6F5-45570-00	REC663-45631-00	REC663-45633-00	REC6F6-45611-00	REC676-45361-00	REC676-45501-10
F40A	1999	REC6H4-45551-00	REC6H4-45560-00	REC6H4-45570-00		REC663-45633-00		REC63D-45361-02-4D	REC67C-45501-00
F40A ED	1999	REC6K5-45551-00	REC6K5-45560-00	REC6K5-45570-00		REC688-45633-00		REC63D-45361-02-4D	REC67C-45501-00
F40A EDL	2001	REC6H4-45551-00	REC6H4-45560-00	REC6H4-45570-00		REC688-45633-00		REC63D-45361-02-4D	REC67C-45501-10
F40A ET	1999	REC6K5-45551-00	REC6K5-45560-00	REC6K5-45570-00	REC688-45631-00	REC688-45633-00	REC688-45611-00	REC688-45331-00-94	
F40A ETL	2001-02	REC6H4-45551-00	REC6H4-45560-00	REC6H4-45570-00		REC688-45633-00		REC63D-45361-02-4D	
F40A ED	1999	REC6H4-45551-00	REC6H4-45560-00	REC6H4-45570-00	REC688-45631-00	REC663-45633-00	REC688-45611-00	REC688-45331-00-94	
F40B ED	2000-01	REC66T-45551-00	REC66T-45560-00	REC66T-45571-00	REC66T-45631-00		REC66T-45611-00	REC63D-45361-02-4D	REC67C-45501-00
F40B EDL	2001-06	REC66T-45551-00	REC66T-45560-00	REC66T-45571-00	REC66T-45631-00		REC66T-45611-00	REC63D-45361-02-4D	REC67C-45501-10
F40B EDS	2001-02	REC66T-45551-00	REC66T-45560-00	REC66T-45571-00	REC66T-45631-00		REC66T-45611-00	REC63D-45361-02-4D	REC67C-45501-00
F40B ET	2000-01	REC66T-45551-00	REC66T-45560-00	REC66T-45571-00	REC66T-45631-00		REC66T-45611-00	REC63D-45361-02-4D	REC67C-45501-10
E40B ETL	2001-06	REC66T-45551-00	REC66T-45560-00	REC66T-45571-00	REC66T-45631-00		REC66T-45611-00	REC63D-45361-02-4D	REC67C-45501-10
F40B ETS	2001-06	REC66T-45551-00	REC66T-45560-00	REC66T-45571-00	REC66T-45631-00		REC66T-45611-00	REC63D-45361-02-4D	REC67C-45501-00
F40B MHD	2000	REC66T-45551-00	REC66T-45560-00	REC66T-45571-00	REC66T-45631-00		REC66T-45611-00	REC63D-45361-02-4D	REC67C-45501-00
F40B MHDL	2001-06	REC66T-45551-00	REC66T-45560-00	REC66T-45571-00	REC66T-45631-00		REC66T-45611-00	REC63D-45361-02-4D	REC67C-45501-10
F40B MHDS	2001-06	REC66T-45551-00	REC66T-45560-00	REC66T-45571-00	REC66T-45631-00		REC66T-45611-00	REC63D-45361-02-4D	REC67C-45501-00
F45A	1996-99	REC6K5-45551-00	REC6K5-45560-00	REC6K5-45570-00	REC688-45631-00	REC688-45633-00	REC688-45611-00	REC688-45331-00-94	
F45A ED F45A ET	2000	REC6K5-45551-00	REC6K5-45560-00	REC6K5-45570-00	REC688-45631-00	REC688-45633-00	REC688-45611-00	REC688-45331-00-94	
50D	1984-90	REC6H4-45551-00	REC6H4-45560-00	REC6H4-45570-00	REC6H4-45631-00	REC663-45633-00	REC679-45611-00		
50D	1991-93	REC6H4-45551-00	REC6H4-45560-00	REC663-45631-00	REC6H4-45631-00	REC663-45633-00	REC679-45611-00		
50G	1993-98	REC6K5-45551-00	REC6K5-45560-00		REC663-45631-00	REC688-45633-00	REC697-45611-00	REC688-45331-00-94	
50G ETO	2000	REC6K5-45551-00	REC6K5-45560-00		REC663-45631-00	REC688-45633-00	REC697-45611-00	REC688-45331-00-94	
50G ETOL	2001-06	REC6K5-45551-00	REC6K5-45560-00		REC663-45631-00	REC688-45633-00	REC697-45611-00	REC688-45331-00-94	
50H	1995-98	REC6H4-45551-00	REC6H4-45560-00	REC6H4-45570-00		REC663-45633-00		REC63D-45361-02-4D	
50H EDO	2000	REC6H4-45551-00	REC6H4-45560-00	REC6H4-45570-00		REC663-45633-00		REC63D-45361-02-4D	
50H EDOL 50H EDOS	2001-02	REC6H4-45551-00	REC6H4-45560-00	REC6H4-45570-00		REC663-45633-00		REC63D-45361-02-4D	
50H MDO 50H MO	2000	REC6H4-45551-00	REC6H4-45560-00	REC6H4-45570-00		REC663-45633-00		REC63D-45361-02-4D	
F50A	1995	REC6H4-45551-00	REC6H4-45560-00	REC6H4-45570-00		REC663-45633-00		REC63D-45361-02-4D	
F50A ED	2000	REC6K5-45551-00	REC6K5-45560-00	REC6K5-45570-00		REC663-45633-00	REC688-45611-00		
F50A EDL	2001-06	REC6H4-45551-00	REC6H4-45560-00			REC688-45633-00		REC63D-45361-02-4D	
F50A ET	2000	REC6K5-45551-00	REC6K5-45560-00	REC6K5-45570-00		REC663-45633-00	REC688-45611-00		
F50A ETL	2001-06	REC6H4-45551-00	REC6H4-45560-00			REC688-45633-00		REC63D-45361-02-4D	
F50B	1996-97	REC6K5-45551-00	REC6K5-45560-00	REC6K5-45570-00	REC688-45631-00	REC688-45633-00			
F50B	1998-99	REC6K5-45551-00	REC6K5-45560-00	REC6K5-45570-00				REC688-45331-00-94	
F50B ET	2000	REC6K5-45551-00	REC6K5-45560-00	REC6K5-45570-00	REC688-45631-00	REC663-45633-00	REC688-45611-00	REC688-45331-00-94	
FT50B	1998-99	REC6K5-45551-00	REC6K5-45560-00	REC6K5-45570-00	REC688-45631-00	REC688-45633-00	REC688-45611-00	REC688-45331-00-94	
FT50B ETL	2001-02					REC688-45633-00		REC63D-45361-02-4D	
FT50C ETL	2002-06		REC67F-45560-00			REC688-45633-00			
FT50G ETL	2005-06	REC6K5-45551-00	REC6K5-45560-00			REC688-45633-00			
55B	1993-98	REC697-45551-00	REC697-45560-00	REC697-45571-00-00	REC663-45631-00	REC663-45633-00	REC697-45611-00	REC663-45331-00-94	REC663-45510-01
55B E	1990-91	REC697-45551-00	REC697-45560-00	REC697-45571-00-00	REC663-45631-00	REC663-45633-00	REC697-45611-00	REC663-45331-00-94	REC663-45510-01
55B E	1992	REC697-45551-00	REC697-45560-00	REC697-45571-00-00	REC663-45631-00	REC663-45633-00	REC697-45611-00	REC663-45331-00-94	REC663-45510-01
55B EHD 55B ET	2000	REC697-45551-00	REC697-45560-00	REC697-45571-00-00	REC663-45631-00	REC663-45633-00	REC697-45611-00		REC663-45510-01
55B ETL	2001-02	REC697-45551-00	REC697-45560-00	REC697-45571-00-00	REC663-45631-00	REC663-45633-00	REC697-45611-00	REC663-45331-00-94	
60F	1984-98	REC6K5-45551-00	REC6K5-45560-00		REC663-45631-00	REC688-45633-00	REC697-45611-00	REC688-45331-00-94	
60F EO 60F ETO	2000	REC6K5-45551-00	REC6K5-45560-00		REC663-45631-00	REC688-45633-00	REC697-45611-00	REC688-45331-00-94	
60F ETOL	2001-06	REC6K5-45551-00	REC6K5-45560-00		REC663-45631-00	REC688-45633-00	REC697-45611-00	REC688-45331-00-94	
E60H MHDL	2001-06	REC6K5-45551-00	REC6K5-45560-00		REC6H1-45631-01	REC688-45633-00	REC6H1-45611-00	REC688-45331-00-94	REC69D-45501-10
FT60B ETL	2003-06	REC6K5-45551-00	REC6K5-45560-00			REC688-45633-00			
FT60D ETL	2005-06	REC6K5-45551-00	REC6K5-45560-00			REC688-45633-00			
70B	1984-98	REC6K5-45551-00	REC6K5-45560-00		REC663-45631-00	REC688-45633-00	REC697-45611-00	REC688-45331-00-94	
70B EDOL	2001	REC6K5-45551-00	REC6K5-45560-00			REC688-45633-00	REC697-45611-00	REC688-45331-00-94	
70B EO 70B ETO	2000	REC6K5-45551-00	REC6K5-45560-00		REC663-45631-00	REC688-45633-00	REC697-45611-00	REC688-45331-00-94	
70B ETOL	2001-06	REC6K5-45551-00	REC6K5-45560-00		REC663-45631-00	REC688-45633-00	REC697-45611-00	REC688-45331-00-94	
75A	1990-98	REC688-45551-00	REC688-45560-00	REC688-45571-00-00	REC688-45631-00	REC688-45633-00	REC688-45611-00	REC688-45331-00-94	REC688-45501-11
75A E	1990-00	REC688-45551-00	REC688-45560-00	REC688-45571-00-00	REC688-45631-00	REC688-45633-00	REC688-45611-00	REC688-45331-00-94	REC688-45501-10
75A EDL	2001-06	REC688-45551-00	REC688-45560-00	REC688-45571-00-00	REC688-45631-00	REC688-45633-00	REC688-45611-00	REC688-45331-00-94	REC688-45501-10
75A EM	1992-93	REC688-45551-00	REC688-45560-00	REC688-45571-00-00	REC688-45631-00	REC688-45633-00	REC688-45611-00	REC688-45331-00-94	REC688-45501-11
75A ET	2000	REC688-45551-00	REC688-45560-00	REC688-45571-00-00	REC688-45631-00	REC688-45633-00	REC688-45611-00	REC688-45331-00-94	REC688-45501-11
75A ETL	2001-02	REC688-45551-00	REC688-45560-00	REC688-45571-00-00	REC688-45631-00	REC688-45633-00	REC688-45611-00	REC688-45331-00-94	REC688-45501-11







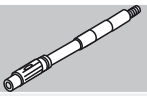



75A MHD	2000	REC688-45551-00	REC688-45560-00	REC688-45571-00-00	REC688-45631-00	REC688-45633-00	REC688-45611-00	REC688-45331-00-94	REC688-45501-11
75C ETO	2000	REC688-45551-00	REC688-45560-00	REC688-45571-00-00		REC688-45633-00	REC6H1-45611-00	REC688-45331-00-94	
75C ETOL	2001-06	REC688-45551-00	REC688-45560-00	REC688-45571-00-00		REC688-45633-00	REC6H1-45611-00	REC688-45331-00-94	
80A	1985-95	REC688-45551-00	REC688-45560-00	REC688-45571-00-00	REC6H1-45631-01	REC688-45633-00	REC6H1-45611-00	REC688-45331-00-94	
F80A	1999		REC67F-45560-00	REC67F-45570-00		REC688-45633-00			REC67F-45501-10
F80A ET	2000		REC67F-45560-00	REC67F-45570-00		REC688-45633-00			REC67F-45501-10
F80A ETL	2001-06		REC67F-45560-00	REC67F-45570-00		REC688-45633-00	REC67F-45611-01		REC67F-45501-10
F80A ETX	2001		REC67F-45560-00	REC67F-45570-00		REC688-45633-00	REC67F-45611-01		REC67F-45501-10
F80B ETL	2005-06		REC67F-45560-00	REC67F-45570-00		REC688-45633-00	REC67F-45611-01		REC67F-45501-10
85A	1996-98	REC688-45551-00	REC688-45560-00	REC688-45571-00-00	REC688-45631-00	REC688-45633-00	REC688-45611-00	REC688-45331-00-94	REC688-45501-10
85A E	1990-00	REC688-45551-00	REC688-45560-00	REC688-45571-00-00	REC688-45631-00	REC688-45633-00	REC688-45611-00	REC688-45331-00-94	REC688-45501-10
85A ET	2000	REC688-45551-00	REC688-45560-00	REC688-45571-00-00	REC688-45631-00	REC688-45633-00	REC688-45611-00	REC688-45331-00-94	REC688-45501-10
85A ETL	2001-02	REC688-45551-00	REC688-45560-00	REC688-45571-00-00	REC688-45631-00	REC688-45633-00	REC688-45611-00	REC688-45331-00-94	REC688-45501-11
90A	1984-98	REC688-45551-00	REC688-45560-00	REC688-45571-00-00	REC6H1-45631-01	REC688-45633-00	REC6H1-45611-00	REC688-45331-00-94	
90A ETO	2000	REC688-45551-00	REC688-45560-00	REC688-45571-00-00	REC6H1-45631-01	REC688-45633-00	REC6H1-45611-00	REC688-45331-00-94	
90A ETOL	2001-06	REC688-45551-00	REC688-45560-00	REC688-45571-00-00	REC6H1-45631-01	REC688-45633-00	REC6H1-45611-00	REC688-45331-00-94	
100A	1998	REC6E5-45551-00	REC6E5-45560-00	REC6E5-45570-00	REC6E5-45631-00	REC6E5-45633-01	REC6E5-45611-00	REC6E5-45331-00-94	REC6E5-45501-01
100A ETO	2000	REC6E5-45551-00	REC6E5-45560-00	REC6E5-45570-00	REC6E5-45631-00	REC6E5-45633-01	REC6E5-45611-00	REC6E5-45331-00-94	REC6E5-45501-01
100A ETOL	2001	REC6E5-45551-00	REC6E5-45560-00	REC6E5-45570-00	REC6E5-45631-00	REC6E5-45633-01	REC6E5-45611-00	REC6E5-45331-00-94	
F100A	1999		REC67F-45560-00	REC67F-45570-00		REC688-45633-00	REC67F-45611-01		REC67F-45501-10
F100A ET	2000		REC67F-45560-00	REC67F-45570-00		REC688-45633-00	REC67F-45611-01		REC67F-45501-10
F100A ETL	2001-06		REC67F-45560-00	REC67F-45570-00		REC688-45633-00	REC67F-45611-01		
F100A ETX	2001		REC67F-45560-00	REC67F-45570-00		REC688-45633-00	REC67F-45611-01		
F100B ETX	2005-06					REC6E5-45633-01	REC6E5-45611-00	REC6E5-45331-00-94	
F100D ETL	2005-06					REC688-45633-00			
115A	1984-87	REC6E5-45551-00	REC6E5-45560-00	REC6E5-45570-00	REC6E5-45631-00	REC6E5-45633-01	REC6E5-45611-00	REC6E5-45331-00-94	REC6E5-45501-01
115B	1988-95	REC6E5-45551-00	REC6E5-45560-00	REC6E5-45570-00	REC6E5-45631-00	REC6E5-45633-01	REC6E5-45611-00	REC6E5-45331-00-94	REC6E5-45501-01
115B	1996	REC6E5-45551-00	REC6E5-45560-00	REC6E5-45570-00	REC6E5-45631-00	REC6E5-45633-01	REC6E5-45611-00	REC6E5-45331-00-94	REC6E5-45501-01
155B ETO	1997-98	REC6E5-45551-00	REC6E5-45560-00	REC6E5-45570-00	REC6E5-45631-00	REC6E5-45633-01	REC6E5-45611-00	REC6E5-45331-00-94	
115B ETO	1999-00	REC6E5-45551-00	REC6E5-45560-00	REC6E5-45570-00	REC6E5-45631-00	REC6E5-45633-01	REC6E5-45611-00	REC6E5-45331-00-94	REC6E5-45501-01
115B ETOL	2001-02	REC6E5-45551-00	REC6E5-45560-00	REC6E5-45570-00	REC6E5-45631-00	REC6E5-45633-01	REC6E5-45611-00	REC6E5-45331-00-94	
115C	1990-95	REC6E5-45551-00	REC6E5-45560-00	REC6E5-45570-00	REC6E5-45631-00	REC6E5-45633-01	REC6E5-45611-00	REC6E5-45331-00-94	REC6E5-45501-01
115C	1995-98	REC6E5-45551-00	REC6E5-45560-00	REC6E5-45570-00	REC6E5-45631-00	REC6E5-45633-01	REC6E5-45611-00		REC6E5-45501-01
115C ETO	2000	REC6E5-45551-00	REC6E5-45560-00	REC6E5-45570-00	REC6E5-45631-00	REC6E5-45633-01	REC6E5-45611-00	REC6E5-45331-00-94	
115C ETOL	2001-06	REC6E5-45551-00	REC6E5-45560-00	REC6E5-45570-00	REC6E5-45631-00	REC6E5-45633-01	REC6E5-45611-00	REC6E5-45331-00-94	
115C ETOX	2001-02	REC6E5-45551-00	REC6E5-45560-00	REC6E5-45570-00	REC6E5-45631-00	REC6E5-45633-01	REC6E5-45611-00	REC6E5-45331-00-94	
F115A ET	2000					REC6E5-45633-01	REC6E5-45611-00	REC6E5-45331-00-94	
F115A ETL F115A ETX	2001-06					REC6E5-45633-01	REC6E5-45611-00	REC6E5-45331-00-94	
FL115A ET	2000					REC6E5-45633-01	REC6E5-45611-00	REC6E5-45331-00-94	
FL115A ETX	2001-06					REC6E5-45633-01	REC6E5-45611-00	REC6E5-45331-00-94	
130B	1990-94	REC6E5-45551-00	REC6E5-45560-00	REC6E5-45570-00	REC6E5-45631-00	REC6E5-45633-01	REC6E5-45611-00	REC6E5-45331-00-94	
130B	1995-99	REC6E5-45551-00	REC6E5-45560-00	REC6E5-45570-00	REC6E5-45631-00	REC6E5-45633-01	REC6E5-45611-00	REC6E5-45331-00-94	
130B ETO	2000	REC6E5-45551-00	REC6E5-45560-00	REC6E5-45570-00	REC6E5-45631-00	REC6E5-45633-01	REC6E5-45611-00	REC6E5-45331-00-94	REC6E5-45501-01
130B ETOL	2001-06	REC6E5-45551-00	REC6E5-45560-00	REC6E5-45570-00	REC6E5-45631-00	REC6E5-45633-01	REC6E5-45611-00	REC6E5-45331-00-94	
130B ETOX	2001	REC6E5-45551-00	REC6E5-45560-00	REC6E5-45570-00	REC6E5-45631-00	REC6E5-45633-01	REC6E5-45611-00	REC6E5-45331-00-94	
L130B	1991-94	REC6E5-45551-00	REC6E5-45560-00	REC6E5-45570-00	REC6E5-45631-00	REC6E5-45633-01	REC6E5-45611-00	REC6E5-45331-00-94	REC6E5-45501-01
L130B	1995-98	REC6E5-45551-00	REC6E5-45560-00	REC6E5-45570-00	REC6E5-45631-00	REC6E5-45633-01	REC6E5-45611-00	REC6E5-45331-00-94	REC6E5-45501-01
L130B ETO	2000	REC6E5-45551-00	REC6E5-45560-00	REC6E5-45570-00	REC6E5-45631-00	REC6E5-45633-01	REC6E5-45611-00	REC6E5-45331-00-94	REC6E5-45501-01
L130B ETOX	2001	REC6E5-45551-00	REC6E5-45560-00	REC6E5-45570-00	REC6E5-45631-00	REC6E5-45633-01		REC6E5-45331-00-94	
140A	1984-87	REC6E5-45551-00	REC6E5-45560-00	REC6E5-45570-00	REC6E5-45631-00	REC6E5-45633-01	REC6E5-45611-00	REC6E5-45331-00-94	REC6E5-45501-01
140B	1988	REC6E5-45551-00	REC6E5-45560-00	REC6E5-45570-00	REC6E5-45631-00	REC6E5-45633-01	REC6E5-45611-00	REC6E5-45331-00-94	
L140B	1989	REC6E5-45551-00	REC6E5-45560-00	REC6E5-45570-00	REC6E5-45631-00	REC6E5-45633-01			
150A	1984-89	REC6G5-45551-00	REC6G5-45560-00	REC6G5-45571-00	REC6G5-45631-00	REC6E5-45633-01	REC6E5-45611-00		
150A ET	1998-00	REC6G5-45551-00	REC6G5-45560-00	REC6G5-45571-00	REC6G5-45631-00	REC6E5-45633-01		REC6J9-45332-00-CA	REC6G5-45501-21
150A ETO	1986-87	REC6G5-45551-00	REC6G5-45560-00	REC6G5-45571-00	REC6G5-45631-00	REC6E5-45633-01	REC6J9-45611-00	REC6J9-45332-00-CA	
150A ETL 150A ETX	2001-02	REC6G5-45551-00	REC6G5-45560-00	REC6G5-45571-00	REC6G5-45631-00	REC6E5-45633-01	REC6J9-45611-00	REC6J9-45332-00-CA	REC6G5-45501-21
150C	1990-94	REC6G5-45551-00	REC6G5-45560-00	REC6G5-45571-00	REC6G5-45631-00	REC6E5-45633-01	REC6J9-45611-00	REC6J9-45332-00-CA	REC6G5-45501-21
150C	1995	REC6G5-45551-00	REC6G5-45560-00	REC6G5-45571-00	REC6G5-45631-00	REC6E5-45633-01	REC6J9-45611-00	REC6J9-45332-00-CA	REC6G5-45501-21
150F	1996-98	REC6G5-45551-00	REC6G5-45560-00	REC6G5-45571-00	REC6G5-45631-00	REC6E5-45633-01	REC6J9-45611-00	REC6J9-45332-00-CA	REC6G5-45501-21
150F	1997-98	REC6G5-45551-00	REC6G5-45560-00	REC6G5-45571-00	REC6G5-45631-00	REC6E5-45633-01	REC6J9-45611-00	REC6J9-45332-00-CA	REC6G5-45501-21
150F ETO	2000	REC6G5-45551-00	REC6G5-45560-00	REC6G5-45571-00	REC6G5-45631-00	REC6E5-45633-01	REC6J9-45611-00	REC6J9-45332-00-CA	REC6G5-45501-21
150F ETOL 150F ETOX	2001-06	REC6G5-45551-00	REC6G5-45560-00	REC6G5-45571-00	REC6G5-45631-00	REC6E5-45633-01	REC6J9-45611-00	REC6J9-45332-00-CA	REC6G5-45501-21
F150A ETL F150A ETX FL150A ETL FL150A ETX	2004-06					REC6E5-45633-01	REC6J9-45611-00	REC6J9-45332-00-CA	
L150A L150A ETO	1988-89	REC6G5-45551-00	REC6G5-45560-00	REC6G5-45571-00	REC6G5-45631-00	REC6E5-45633-01			REC6G5-45501-21







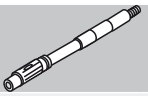



L150C	1990-94	REC6G5-45551-00	REC6G5-45560-00	REC6G5-45571-00	REC6G5-45631-00	REC6E5-45633-01	REC6J9-45611-00	REC6J9-45332-00-CA	REC6G5-45501-21
L150C	1995	REC6G5-45551-00	REC6G5-45560-00	REC6G5-45571-00	REC6G5-45631-00	REC6E5-45633-01	REC6J9-45611-00	REC6J9-45332-00-CA	REC6G5-45501-21
L150F	1996-98	REC6G5-45551-00	REC6G5-45560-00	REC6G5-45571-00	REC6G5-45631-00	REC6E5-45633-01	REC6J9-45611-00	REC6J9-45332-00-CA	REC6G5-45501-21
L150F ETO	2000-01	REC6G5-45551-00	REC6G5-45560-00	REC6G5-45571-00	REC6G5-45631-00	REC6E5-45633-01	REC6J9-45611-00	REC6J9-45332-00-CA	REC6G5-45501-21
L150F ETOL L150F EOTX	2001	REC6G5-45551-00	REC6G5-45560-00	REC6G5-45571-00	REC6G5-45631-00	REC6E5-45633-01	REC6J9-45611-00	REC6J9-45332-00-CA	REC6G5-45501-21
LZ150P ETO	2000-06	REC6G5-45551-00	REC6G5-45560-00	REC6G5-45571-00	REC6G5-45631-00	REC6E5-45633-01	REC6J9-45611-00	REC6J9-45332-00-CA	REC6G5-45501-21
Z150P ETO	2000	REC6G5-45551-00	REC6G5-45560-00	REC6G5-45571-00	REC6G5-45631-00	REC6E5-45633-01	REC6J9-45611-00	REC6J9-45332-00-CA	REC6G5-45501-21
Z150P ETOL Z150P ETOX	2001-06	REC6G5-45551-00	REC6G5-45560-00	REC6G5-45571-00	REC6G5-45631-00	REC6E5-45633-01	REC6J9-45611-00	REC6J9-45332-00-CA	REC6G5-45501-21
Z150Q ETO	2000				REC6G5-45631-00	REC6E5-45633-01	REC6J9-45611-00	REC6J9-45332-00-CA	
Z150Q ETOL	1984-89				REC6G5-45631-00	REC6E5-45633-01	REC6J9-45611-00	REC6J9-45332-00-CA	
175A	1986-87	REC6G5-45551-00	REC6G5-45560-00	REC6G5-45571-00	REC6G5-45631-00	REC6E5-45633-01	REC6E5-45611-00		
175A ETO	1990-94	REC6G5-45551-00	REC6G5-45560-00	REC6G5-45571-00	REC6G5-45631-00	REC6E5-45633-01	REC6E5-45611-00		
175B	1995	REC6G5-45551-00	REC6G5-45560-00	REC6G5-45571-00	REC6G5-45631-00	REC6E5-45633-01	REC6J9-45611-00	REC6J9-45332-00-CA	REC6G5-45501-21
175B	1996-98	REC6G5-45551-00	REC6G5-45560-00	REC6G5-45571-00	REC6G5-45631-00	REC6E5-45633-01	REC6J9-45611-00	REC6J9-45332-00-CA	REC6G5-45501-21
175D	2000	REC6G5-45551-00	REC6G5-45560-00	REC6G5-45571-00	REC6G5-45631-00	REC6E5-45633-01	REC6J9-45611-00	REC6J9-45332-00-CA	REC6G5-45501-21
175D ETO	2001-03	REC6G5-45551-00	REC6G5-45560-00	REC6G5-45571-00	REC6G5-45631-00	REC6E5-45633-01	REC6J9-45611-00	REC6J9-45332-00-CA	REC6G5-45501-21
175D ETOL	2001-02	REC6G5-45551-00	REC6G5-45560-00	REC6G5-45571-00	REC6G5-45631-00	REC6E5-45633-01	REC6J9-45611-00	REC6J9-45332-00-CA	REC6G5-45501-21
175D ETOX	2001-06	REC6G5-45551-00	REC6G5-45560-00	REC6G5-45571-00	REC6G5-45631-00	REC6E5-45633-01	REC6J9-45611-00	REC6J9-45332-00-CA	REC6G5-45501-21
Z175G ETOX	2001	REC6G5-45551-00	REC6G5-45560-00	REC6G5-45571-00	REC6G5-45631-00	REC6E5-45633-01	REC6J9-45611-00	REC6J9-45332-00-CA	REC6G5-45501-21
Z175H ETOL	1984-89				REC6G5-45631-00	REC6E5-45633-01	REC6J9-45611-00	REC6J9-45332-00-CA	REC6G5-45501-21
200A	1986-87	REC6G5-45551-00	REC6G5-45560-00	REC6G5-45571-00	REC6G5-45631-00	REC6E5-45633-01	REC6J9-45611-00		
200A ETO	1990-94	REC6G5-45551-00	REC6G5-45560-00	REC6G5-45571-00	REC6G5-45631-00	REC6E5-45633-01	REC6J9-45611-00	REC6J9-45332-00-CA	REC6G5-45501-21
200B	1990-95	REC6G5-45551-00	REC6G5-45560-00	REC6G5-45571-00	REC6G5-45631-00	REC6E5-45633-01	REC6J9-45611-00	REC6J9-45332-00-CA	REC6G5-45501-21
200F	1996-98	REC6G5-45551-00	REC6G5-45560-00	REC6G5-45571-00	REC6G5-45631-00	REC6E5-45633-01	REC6J9-45611-00	REC6J9-45332-00-CA	REC6G5-45501-21
200F ETO	2000	REC6G5-45551-00	REC6G5-45560-00	REC6G5-45571-00	REC6G5-45631-00	REC6E5-45633-01	REC6J9-45611-00	REC6J9-45332-00-CA	REC6G5-45501-21
200F ETOL 200F ETOX	2001-06	REC6G5-45551-00	REC6G5-45560-00	REC6G5-45571-00	REC6G5-45631-00	REC6E5-45633-01	REC6J9-45611-00	REC6J9-45332-00-CA	REC6G5-45501-21
200G	1999				REC6G5-45631-00	REC6E5-45633-01	REC6J9-45611-00	REC6J9-45332-00-CA	
200G ETO	2000				REC6G5-45631-00	REC6E5-45633-01	REC6J9-45611-00	REC6J9-45332-00-CA	
200G ETOL	2001-03				REC6G5-45631-00	REC6E5-45633-01	REC6J9-45611-00	REC6J9-45332-00-CA	REC6G5-45501-21
F200A ETX	2002-06				REC69J-45631-00	REC61A-45633-00	REC69J-45611-00		
F200C ETX	2006				REC69J-45631-00	REC61A-45633-00	REC69J-45611-00		
FL200A ETX	2002-06				REC69J-45631-00	REC61A-45633-00	REC69J-45611-00		
FL200C ETX	2006				REC69J-45631-00	REC61A-45633-00	REC69J-45611-00		
L200A	1988-89	REC6G5-45551-00	REC6G5-45560-00	REC6G5-45571-00	REC6G5-45631-00	REC6E5-45633-01			
L200B	1990-94	REC6G5-45551-00	REC6G5-45560-00	REC6G5-45571-00	REC6G5-45631-00	REC6E5-45633-01	REC69J-45611-00	REC6J9-45332-00-CA	REC6G5-45501-21
L200B	1995	REC6G5-45551-00	REC6G5-45560-00	REC6G5-45571-00	REC6E5-45631-00	REC6E5-45633-01	REC69J-45611-00	REC6J9-45332-00-CA	REC6G5-45501-21
L200F	1996-98	REC6G5-45551-00	REC6G5-45560-00	REC6G5-45571-00	REC6G5-45631-00	REC6E5-45633-01	REC69J-45611-00	REC6J9-45332-00-CA	REC6G5-45501-21
L200F ETO	2000	REC6G5-45551-00	REC6G5-45560-00	REC6G5-45571-00	REC6G5-45631-00	REC6E5-45633-01	REC69J-45611-00	REC6J9-45332-00-CA	REC6G5-45501-21
L200F ETOL	2001-06	REC6G5-45551-00	REC6G5-45560-00	REC6G5-45571-00	REC6G5-45631-00	REC6E5-45633-01	REC69J-45611-00	REC6J9-45332-00-CA	REC6G5-45501-21
FL200F ETOX	2001	REC6G5-45551-00	REC6G5-45560-00	REC6G5-45571-00	REC6G5-45631-00	REC6E5-45633-01	REC69J-45611-00	REC6J9-45332-00-CA	REC6G5-45501-21
LZ200N ETC	2001-07	REC6G5-45551-00	REC6G5-45560-00	REC6G5-45571-00	REC6G5-45631-00	REC6E5-45633-01	REC69J-45611-00	REC6J9-45332-00-CA	REC6G5-45501-21
Z200N ETO	2000	REC6G5-45551-00	REC6G5-45560-00	REC6G5-45571-00	REC6G5-45631-00	REC6E5-45633-01	REC69J-45611-00	REC6J9-45332-00-CA	REC6G5-45501-21
Z200N ETOL	2001-06	REC6G5-45551-00	REC6G5-45560-00	REC6G5-45571-00	REC6G5-45631-00	REC6E5-45633-01	REC69J-45611-00	REC6J9-45332-00-CA	REC6G5-45501-21
Z200N ETOX	2001-06	REC6G5-45551-00	REC6G5-45560-00	REC6G5-45571-00	REC6G5-45631-00	REC6E5-45633-01	REC69J-45611-00	REC6J9-45332-00-CA	REC6G5-45501-21
Z200P ETOL	2003-06	REC6G5-45551-00	REC6G5-45560-00	REC6G5-45571-00	REC6G5-45631-00	REC6E5-45633-01	REC69J-45611-00	REC6J9-45332-00-CA	
220A	1984-86				REC6G5-45631-00	REC6E5-45633-01	REC6E5-45611-00	REC6J9-45332-00-CA	REC6G5-45501-21
225A	1987-89					REC6E5-45633-01	REC6J9-45611-00	REC6J9-45332-00-CA	REC6G5-45501-21
225B	1990-94				REC6G5-45631-00	REC6E5-45633-01	REC69J-45611-00	REC6J9-45332-00-CA	REC6G5-45501-21
225B	1995				REC6G5-45631-00	REC6E5-45633-01	REC69J-45611-00	REC6J9-45332-00-CA	REC6G5-45501-21
225D	1996-98				REC6G5-45631-00	REC6E5-45633-01	REC6E5-45611-00	REC6J9-45332-00-CA	REC6G5-45501-21
225D ETO	2000				REC6G5-45631-00	REC6E5-45633-01	REC69J-45611-00	REC6J9-45332-00-CA	REC6G5-45501-21
225D ETOL 225D ETOX	2001-03				REC6G5-45631-00	REC6E5-45633-01	REC69J-45611-00	REC6J9-45332-00-CA	REC6G5-45501-21
225G ETOL	2001-03				REC6G5-45631-00	REC6E5-45633-01	REC69J-45611-00	REC6J9-45332-00-CA	

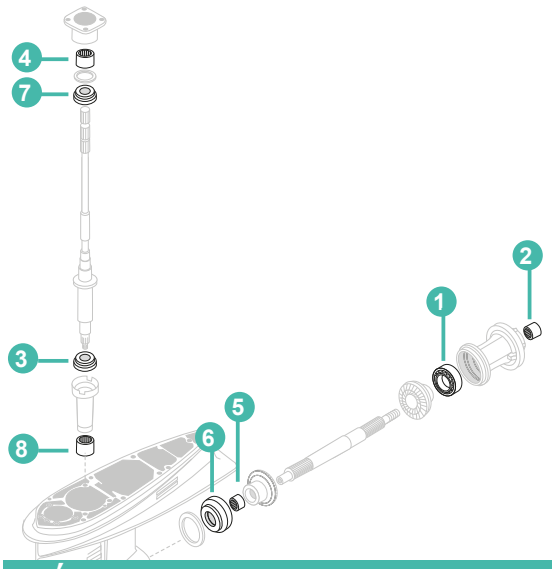

GUÍA RODAMIENTOS — STERN DRIVE BEARING APPLICATION — GUIDA CUSCINETTI TRASMISIONE — GUIDE ROULEMENTS D'EMBASE

		1	2	3	4	5	6	7	8
F8A	1986-89				REC93315-317U2		REC93332-00005		REC93306-00501
F8B	1985-99	REC93315-314V8		REC93341-214U1	REC93315-317U2		REC93332-00005		REC93306-00501
F8B E F8B EH F8B MH	1999	REC93315-314V8		REC93341-41414	REC93315-317U2		REC93332-00005		REC93306-00501
FT8D EL FT8D EPL	2001-04	REC93315-314V8		REC93341-41414	REC93315-317U2		REC93332-00005		REC93306-00501
FT8D EPX	2001-02	REC93315-314V8		REC93341-41414	REC93315-317U2		REC93332-00005		REC93306-00501
FT8D EX FT8D MHL FT8D MHX	2001-04	REC93315-314V8		REC93341-41414	REC93315-317U2		REC93332-00005		REC93306-00501
9.9D	1985-89	REC93315-314V8		REC93341-41414	REC93315-317U2		REC93332-00005		REC93306-00501
9.9D	1985-95	REC93315-314V8		REC93341-214U1	REC93315-317U2		REC93332-00005		REC93306-00501
9.9D	1990-95	REC93315-314V8		REC93341-41414	REC93315-317U2		REC93332-00005		REC93306-00519
9.9F	1995-99	REC93315-314V8		REC93341-41414	REC93315-317U2		REC93332-00005		REC93306-00501
9.9F MH	2000	REC93315-314V8		REC93341-41414	REC93315-317U2		REC93332-00005		REC93306-00501
9.9F MHL 9.9F MHS	2001-06	REC93315-314V8		REC93341-41414	REC93315-317U2		REC93332-00005		REC93306-00501
9.9F WC 9.9F WH	2000	REC93315-314V8		REC93341-41414	REC93315-317U2		REC93332-00005		REC93306-00501
9.9F WHL 9.9F WHS	2001	REC93315-314V8		REC93341-41414	REC93315-317U2		REC93332-00005		REC93306-00501
F9.9B	1985-97	REC93315-314V8		REC93341-214U1	REC93315-317U2		REC93332-00005		REC93306-00501
F9.9B E F9.9B EH F9.9B MH	1999	REC93315-314V8		REC93341-41414	REC93315-317U2		REC93332-00005		REC93306-00501
F9.9C	1998	REC93315-314V8		REC93341-41414	REC93315-317U2		REC93332-00005		REC93306-00501
F9.9C E F9.9C EH	2000	REC93315-314V8		REC93341-41414	REC93315-317U2		REC93332-00005		REC93306-00501
F9.9C EL F9.9C ES	2001-06	REC93315-314V8		REC93341-41414	REC93315-317U2		REC93332-00005		REC93306-00501
F9.9C MH	2000	REC93315-314V8		REC93341-41414	REC93315-317U2		REC93332-00005		REC93306-00501
F9.9C MHL F9.9C MHS	2001-06	REC93315-314V8		REC93341-41414	REC93315-317U2		REC93332-00005		REC93306-00501
FT9.9A	1999				REC93315-317U2		REC93332-00005		REC93306-00501
FT9.9D	1999	REC93315-314V8		REC93341-41414	REC93315-317U2		REC93332-00005		REC93306-00501
FT9.9D E FT9.9D EH	2000	REC93315-314V8		REC93341-41414	REC93315-317U2		REC93332-00005		REC93306-00501
FT9.9D EHL FT9.9D EHX	2001	REC93315-314V8		REC93341-41414	REC93315-317U2		REC93332-00005		REC93306-00501
FT9.9D EL	2001-06	REC93315-314V8		REC93341-41414	REC93315-317U2		REC93332-00005		REC93306-00501
FT9.9D EP	2000	REC93315-314V8		REC93341-41414	REC93315-317U2		REC93332-00005		REC93306-00501
FT9.9D EPL FT9.9D EPX	2001-02	REC93315-314V8		REC93341-41414	REC93315-317U2		REC93332-00005		REC93306-00501
FT9.9D ES	2001	REC93315-314V8		REC93341-41414	REC93315-317U2		REC93332-00005		REC93306-00501
FT9.9D EX	2001-06	REC93315-314V8		REC93341-41414	REC93315-317U2		REC93332-00005		REC93306-00501
FT9.9D MH	2000	REC93315-314V8		REC93341-41414	REC93315-317U2		REC93332-00005		REC93306-00501
FT9.9D MHL	2001-06	REC93315-314V8		REC93341-41414	REC93315-317U2		REC93332-00005		REC93306-00501
FT9.9D MHX	2001	REC93315-314V8		REC93341-41414	REC93315-317U2		REC93332-00005		REC93306-00501
13.5A	1999	REC93315-314V8		REC93341-41414	REC93315-317U2		REC93332-00005		REC93306-00501
13.5A MH	2000	REC93315-314V8		REC93341-41414	REC93315-317U2		REC93332-00005		REC93306-00501
13.5A MHL 13.5A MHS	2001-04	REC93315-314V8		REC93341-41414	REC93315-317U2		REC93332-00005		REC93306-00501
13.5A WH	2000	REC93315-314V8		REC93341-41414	REC93315-317U2		REC93332-00005		REC93306-00501
F13.5A EHL	2005-06	REC93315-314V8			REC93315-317U2		REC93332-00005		REC93306-00501
F13.5A EPL	2005	REC93315-314V8		REC93341-41414	REC93315-317U2		REC93332-00005		REC93306-00501
F13.5A EPS	2005	REC93315-314V8			REC93315-317U2		REC93332-00005		REC93306-00501
F13.5A MH	2001	REC93315-314V8			REC93315-317U2				REC93306-00501
F13.5A MHL F13.5A MHS	2002-06	REC93315-314V8		REC93341-41414	REC93315-317U2		REC93332-00005		REC93306-00501

		1	2	3	4	5	6	7	8
15D	1985-95	REC93315-314V8		REC93341-214U1	REC93315-317U2		REC93332-00005		REC93306-00501
15D	1990-95	REC93315-314V8		REC93341-41414	REC93315-317U2		REC93332-00005		REC93306-00501
15F	1995-99	REC93315-314V8		REC93341-41414	REC93315-317U2		REC93332-00005		REC93306-00501
15F MH	2000	REC93315-314V8		REC93341-41414	REC93315-317U2		REC93332-00005		REC93306-00501
15F MHL 15F MHS	2001-06	REC93315-314V8		REC93341-41414	REC93315-317U2		REC93332-00005		REC93306-00501
15F WC	2000	REC93315-314V8		REC93341-41414	REC93315-317U2		REC93332-00005		REC93306-00501
15F WCL	2001-03	REC93315-314V8		REC93341-41414	REC93315-317U2		REC93332-00005		REC93306-00501
15F WCS	2001-02	REC93315-314V8		REC93341-41414	REC93315-317U2		REC93332-00005		REC93306-00501
F15A	1998	REC93315-314V8		REC93341-41414	REC93315-317U2		REC93332-00005		REC93306-00501
F15A E F15A EH	1998-00	REC93315-314V8		REC93341-41414	REC93315-317U2		REC93332-00005		REC93306-00501
F15A EHS F15A EHL F15A EL	2001-06	REC93315-314V8		REC93341-41414	REC93315-317U2		REC93332-00005		REC93306-00501
F15A EP	2000	REC93315-314V8		REC93341-41414	REC93315-317U2		REC93332-00005		REC93306-00501
F15A EPL	2001-06	REC93315-314V8		REC93341-41414	REC93315-317U2		REC93332-00005		REC93306-00501
F15A EPS	2001-06	REC93315-314V8		REC93341-41414	REC93315-317U2		REC93332-00005		REC93306-00501
F15A ES	2001-06	REC93315-314V8		REC93341-41414	REC93315-317U2		REC93332-00005		REC93306-00501
F15A MH	1998-00	REC93315-314V8		REC93341-41414	REC93315-317U2		REC93332-00005		REC93306-00501
F15A MHL	2001-06	REC93315-314V8		REC93341-41414	REC93315-317U2		REC93332-00005		REC93306-00501
F15A MHS	2001-06	REC93315-314V8		REC93341-41414	REC93315-317U2		REC93332-00005		REC93306-00501
20C	1985-93	REC93315-017U4			REC93315-22004		REC93332-00005		REC93306-00612
20C M	1990-97	REC93315-017U4			REC93315-22004		REC93332-00005		REC93306-00612
20C MH	1998	REC93315-017U4			REC93315-22004		REC93332-00005		REC93306-00612
20C MHL 20C MHS	2001-02	REC93315-017U4			REC93315-22004		REC93332-00005		REC93306-00612
20D	1988		REC93315-22004		REC93315-22004		REC93332-00005		REC93306-00612
20D MHOL 20D MHOS	2001-06		REC93315-22004		REC93315-22004		REC93332-00005		REC93306-00612
20D WOL 20D WOS	2001		REC93315-22004		REC93315-22004		REC93332-00005		REC93306-00612
F20A	1998-99	REC93315-220V7	REC93332-000W5		REC93315-22004		REC93332-00005		REC93306-00612
F20A E	2000		REC93332-000W5		REC93315-22004		REC93332-00005		REC93306-00612
F20A EH	2000	REC93315-220V7	REC93332-000W5		REC93315-22004		REC93332-00005		REC93306-00612
F20A EHS	2001	REC93315-220V7			REC93315-22004		REC93332-00005		REC93306-00612
F20A EL	2001	REC93315-220V7	REC93332-000W5		REC93315-22004		REC93332-00005		REC93306-00612
F20A ES	2001-06	REC93315-220V7	REC93332-000W5		REC93315-22004		REC93332-00005		REC93306-00612
F20A ET	2000	REC93315-220V7	REC93332-000W5		REC93315-22004		REC93332-00005		REC93306-00612
F20A ETL	2003-06	REC93315-220V7	REC93332-000W5		REC93315-22004		REC93332-00005		REC93306-00612
F20A MH F20A MHL	2000	REC93315-220V7	REC93332-000W5		REC93315-22004		REC93332-00005		REC93306-00612
F20A MHS	2001	REC93315-220V7	REC93332-000W5		REC93315-22004		REC93332-00005		REC93306-00612
25B	1994-95	REC93315-325V1	REC93332-00001		REC93317-22204		REC93332-000W7		REC93306-00702
25B MHL 25B MHS	2001-06	REC93315-220V7	REC93332-000W5		REC93315-22004		REC93332-00005		REC93306-00612
25B WCS	2001-02	REC93315-220V7	REC93332-000W5		REC93315-22004		REC93332-00005		REC93306-00612
25D	1985-87	REC93315-017U4			REC93315-22004		REC93332-00005		REC93306-00612
25D M	1990-97	REC93315-017U4			REC93315-22004		REC93332-00005		REC93306-00612
25D MH	1998	REC93315-017U4			REC93315-22004		REC93332-00005		REC93306-00612
25D MHL 25D MHS	2001	REC93315-017U4			REC93315-22004		REC93332-00005		REC93306-00612
25J	1987-91	REC93315-220V7	REC93332-00023		REC93315-22004				REC93306-00612
25J	1992-00		REC93332-00001						REC93306-00612
25N	1988		REC93315-22004		REC93315-22004		REC93332-00005		REC93306-00612
25N MHOL 25N MHOS	2001-06		REC93315-22004		REC93315-22004		REC93332-00005		REC93306-00612
25N WOL	2001-03		REC93315-22004		REC93315-22004		REC93332-00005		REC93306-00612
25N WOS	2001-03				REC93315-22004		REC93332-00005		REC93306-00612
25Q	1988-91	REC93315-32224	REC93332-00023						REC93306-00612
25Q	1990-94	REC93315-32224	REC93332-00001		REC93317-22204				REC93306-00702
25V	1996-98	REC93315-220V7	REC93332-000W5		REC93315-22004		REC93332-00005		REC93306-00612
25V MHL 25V MHS 25V WVS	2001	REC93315-220V7	REC93332-000W5		REC93315-22004		REC93332-00005		REC93306-00612
F25A E F25A EH	2000	REC93315-220V7	REC93332-000W5		REC93315-22004		REC93332-00005		REC93306-00612
F25A EHL	2001-02	REC93315-220V7	REC93332-000W5		REC93315-22004		REC93332-00005		REC93306-00612
F25A EHS	2001	REC93315-220V7	REC93332-000W5		REC93315-22004		REC93332-00005		REC93306-00612
F25A EL F25A ES	2001-06	REC93315-220V7	REC93332-000W5		REC93315-22004		REC93332-00005		REC93306-00612
F25A ET	2000	REC93315-220V7	REC93332-000W5		REC93315-22004		REC93332-00005		REC93306-00612
F25A ETL	2001-06	REC93315-220V7	REC93332-000W5		REC93317-22204		REC93332-00005		REC93306-00612
F25A MH	2000	REC93315-220V7	REC93332-000W5		REC93315-22004		REC93332-00005		REC93306-00612
F25A MHL F25A MHS	2001-06	REC93315-220V7	REC93332-000W5		REC93315-22004		REC93332-00005		REC93306-00612
FT25B ED	2000	REC93315-32224	REC93332-00001		REC93317-22204		REC93332-00003		REC93306-001U1
FT25B EDL FT25B EDX	2001-02	REC93315-32224	REC93332-00001		REC93317-22204		REC93332-00003		REC93306-001U1

		1	2	3	4	5	6	7	8
FT25B ET	2000	REC93315-32224	REC93332-00001		REC93317-22204		REC93332-00003		REC93306-001U1
FT25B ETL	2001-06	REC93315-32224	REC93332-00001		REC93317-22204		REC93332-00003		REC93306-001U1
FT25B ETX	2001-02	REC93315-32224	REC93332-00001		REC93317-22204		REC93332-00003		REC93306-001U1
30A	1985	REC93315-017U4			REC93315-22004		REC93332-00005		REC93306-00612
30A M	1990-92	REC93315-017U4		REC93315-22004	REC93315-22004		REC93332-00005		REC93306-00612
30D	1986-00	REC93315-220V7	REC93332-00023		REC93315-22004				REC93306-00612
30D EOL 30D EOL 30D ETOL	2001-06	REC93315-220V7	REC93332-00001		REC93315-22004				REC93306-00612
30D MHOL 30D MHOS	2001-06	REC93315-220V7	REC93332-00001		REC93315-22004				REC93306-00612
30D OL	2001-03		REC93332-00001		REC93315-22004				REC93306-00612
30D EOS	2001-06		REC93332-00001		REC93315-22004				REC93306-00612
30G	1996-98	REC93315-220V7	REC93332-000W5		REC93315-22004		REC93332-00005		REC93306-00612
30G MHS 30G WCS	2001	REC93315-220V7	REC93332-000W5		REC93315-22004		REC93332-00005		REC93306-00612
30H MHS 30H WCS	2001-02	REC93315-220V7	REC93332-000W5		REC93315-22004		REC93332-00005		REC93306-00612
F30A ETL F30A ETS	2001-06	REC93315-32224	REC93332-00001		REC93317-22204		REC93332-00003		REC93306-001U1
F30A MHDL F30A MHDS	2001-06	REC93315-32224	REC93332-00001		REC93317-22204		REC93332-00003		REC93306-001U1
40G WH	2003	REC93315-324U1	REC93315-217U0	REC93390-000U0			REC93332-000U0		
40H	1985-90	REC93315-32224	REC93332-00023		REC93317-22204				REC93306-00702
40H	1991-93	REC93315-32224	REC93332-00001		REC93317-22204				REC93306-00702
40Q	1993	REC93315-32224	REC93332-00001		REC93317-22204		REC93332-00003		REC93306-00702
40Q E	1992	REC93315-32224	REC93332-00023		REC93317-22204		REC93332-00003		REC93306-00702
40Q M	1990	REC93315-32224	REC93332-00023		REC93317-22204		REC93332-00003		REC93306-00702
40R MHO	2000	REC93315-32224	REC93332-00001		REC93317-22204		REC93332-00003		REC93306-001U1
40R ROS	2001	REC93315-32224	REC93332-00001		REC93317-22204		REC93332-00003		REC93306-001U1
40V	1995-98	REC93315-32224	REC93332-00001		REC93317-22204		REC93332-00003		REC93306-001U1
40V EO	2000	REC93315-32224	REC93332-00001		REC93317-22204		REC93332-00003		REC93306-001U1
40V EOL 40V EOS	2001-06	REC93315-32224	REC93332-00001		REC93317-22204		REC93332-00003		REC93306-001U1
40V ETO	2000	REC93315-32224	REC93332-00001		REC93317-22204		REC93332-00003		REC93306-001U1
40V ETOL 40V ETOS	2001-03	REC93315-32224	REC93332-00001		REC93317-22204		REC93332-00003		REC93306-001U1
40V MHOL 40V MHOS	2001-06	REC93315-32224	REC93332-00001		REC93317-22204		REC93332-00003		REC93306-001U1
40V MO	2000	REC93315-32224	REC93332-00001		REC93317-22204		REC93332-00003		REC93306-001U1
40X	1998	REC93315-32224	REC93332-00001		REC93317-22204		REC93332-00003		REC93306-001U1
40X MH	2000	REC93315-32224	REC93332-00001		REC93317-22204		REC93332-00003		REC93306-001U1
40X MHL	2001-06	REC93315-32224	REC93332-00001		REC93317-22204		REC93332-00003		REC93306-001U1
40X MHS	2001-02	REC93315-32224	REC93332-00001		REC93317-22204		REC93332-00003		REC93306-001U1
40X W	2000	REC93315-32224	REC93332-00001		REC93317-22204		REC93332-00003		REC93306-001U1
40X WL 40X WS	2001	REC93315-32224	REC93332-00001		REC93317-22204		REC93332-00003		REC93306-001U1
40X WT	2000		REC93332-00001		REC93317-22204		REC93332-00003		REC93306-001U1
40X WTL	2001-03	REC93315-32224	REC93332-00001		REC93317-22204		REC93332-00003		REC93306-001U1
40Y ETOL	2001-06	REC93315-32224	REC93332-00001		REC93317-22204		REC93332-00003		REC93306-001U1
40Y MHOS	2001-06	REC93315-32224	REC93332-00001		REC93317-22204		REC93332-00003		REC93306-001U1
E40G MH	2003	REC93315-324U1	REC93315-217U0	REC93390-000U0			REC93332-000U0		REC93332-000U0
E40G MHL	2003	REC93315-324U1	REC93315-217U0	REC93390-000U0			REC93332-000U0		
E40G MHS	2003	REC93315-324U1	REC93315-217U0	REC93390-000U0			REC93332-000U0		REC93332-000U0
F40A F40A ED	1999	REC93315-32224	REC93332-00001		REC93317-22204		REC93332-00003		REC93306-001U1
F40A EDL	2001	REC93315-32224	REC93332-00001		REC93317-22204		REC93332-00003		REC93306-001U1
F40A ET	1999	REC93315-32224	REC93332-00001		REC93317-22204		REC93332-00003		REC93306-001U1
F40A ETL	2001-02	REC93315-32224	REC93332-00001		REC93317-22204		REC93332-00003		REC93306-001U1
F40A ED	1999	REC93315-325V1	REC93332-00001		REC93317-22204		REC93332-00003		REC93306-207U0
F40B ED	2000-01	REC93315-32224	REC93332-00001		REC93317-22204		REC93332-00003		REC93306-001U1
F40B EDL	2001-06	REC93315-32224	REC93332-00001		REC93317-22204		REC93332-00003		REC93306-001U1
F40B EDS	2001-02	REC93315-32224	REC93332-00001		REC93317-22204		REC93332-00003		REC93306-001U1
F40B ET	2000-01	REC93315-32224	REC93332-00001		REC93317-22204		REC93332-00003		REC93306-001U1
F40B ETL F40B ETS	2001-06	REC93315-32224	REC93332-00001		REC93317-22204		REC93332-00003		REC93306-001U1
F40B MHD	2000	REC93315-32224	REC93332-00001		REC93317-22204		REC93332-00003		REC93306-001U1
F40B MHDL F40B MHDS	2001-06	REC93315-32224	REC93332-00001		REC93317-22204		REC93332-00003		REC93306-001U1
F40C ETL	2002-06	REC93315-32224	REC93332-00001		REC93317-22204				
F45A	1996-99	REC93315-32224	REC93332-00001		REC93317-22204		REC93332-000W7		REC93306-001U1
F45A ED F45A ET	2000	REC93315-32224	REC93332-00001		REC93317-22204		REC93332-000W7		REC93306-001U1
50D	1984-90	REC93315-32224	REC93332-00023		REC93317-22204				REC93306-00702
50D	1991-93	REC93315-32224	REC93332-00001						REC93306-00702
50G	1993-98	REC93315-325V1	REC93332-00001		REC93317-22204		REC93332-000W7		REC93306-00702
50G ETO	2000	REC93315-325V1	REC93332-00001		REC93317-22204		REC93332-00003		REC93306-00702
50G ETOL	2001-06	REC93315-325V1	REC93332-00001		REC93317-22204		REC93332-00003		REC93306-00702

		1	2	3	4	5	6	7	8
50H	1995-98	REC93315-32224	REC93332-00001		REC93317-22204		REC93332-00003		REC93306-001U1
50H EDO	2000	REC93315-32224	REC93332-00001		REC93317-22204		REC93332-00003		REC93306-001U1
50H EDOL 50H EDOS	2001-02	REC93315-32224	REC93332-00001		REC93317-22204		REC93332-00003		REC93306-001U1
50H MDO 50H MO	2000	REC93315-32224	REC93332-00001		REC93317-22204		REC93332-00003		REC93306-001U1
F50A	1995	REC93315-32224	REC93332-000U3		REC93317-22204		REC93332-00003		REC93306-001U1
F50A ED	2000	REC93315-32224	REC93332-00001	06	REC93317-22204		REC93332-00003		REC93306-001U1
F50A EDL	2001-06	REC93315-32224	REC93332-00001		REC93317-22204		REC93332-00003		REC93306-001U1
F50A ET	2000	REC93315-32224	REC93332-00001		REC93317-22204		REC93332-00003		REC93306-001U1
F50A ETL	2001-06	REC93315-32224	REC93332-00001		REC93317-22204		REC93332-00003		REC93306-001U1
F50B	1996-97	REC93315-32224	REC93332-00001		REC93317-22204		REC93332-00003		REC93306-001U1
F50B	1998-99	REC93315-325V1	REC93332-000U3		REC93317-22204		REC93332-000W7		REC93306-001U1
F50B ET	2000	REC93315-32224	REC93332-00001		REC93317-22204		REC93332-00003		REC93306-001U1
F50F EDL F50F ETL	2005-06	REC93315-32224	REC93332-00001		REC93317-22204				REC93306-001U1
FT50B	1998-99	REC93315-32224	REC93332-00001		REC93317-22204		REC93332-000W7		REC93306-001U1
FT50B ETL	2001-02	REC93315-32224	REC93332-00001		REC93317-22204		REC93332-00003		REC93306-001U1
FT50C ETL	2002-06	REC93315-32224	REC93332-00001		REC93317-22204		REC93332-00003		REC93306-001U1
FT50G ETL	2005-06		REC93332-000U3		REC93317-325U0				REC93306-001U1
55B	1993-98	REC93315-32224	REC93332-00001		REC93317-22204		REC93332-00003		REC93306-00702
55B E	1990-91	REC93315-32224	REC93332-00001		REC93317-22204		REC93332-00003		REC93306-00702
55B E	1992	REC93315-32224	REC93332-00023		REC93317-22204		REC93332-00003		REC93306-00702
55B EHD	2000	REC93315-32224	REC93332-00001		REC93317-22204		REC93332-00003		REC93306-00702
55B ET	2000	REC93315-32224	REC93332-00001		REC93317-22204		REC93332-00003		REC93306-00702
55B ETL	2001-02	REC93315-32224	REC93332-00001		REC93317-22204	-06	REC93332-00003		REC93306-00702
60F	1984-98	REC93315-325V1	REC93332-00001		REC93317-22204		REC93332-000W7		REC93306-00702
60F EO 60F ETO	2000	REC93315-325V1	REC93332-00001		REC93317-22204		REC93332-00003		REC93306-00702
60F ETOL	2001-06	REC93315-325V1	REC93332-00001		REC93317-22204		REC93332-00003		REC93306-00702
E60H MHDL	2001-06	REC93315-325V1	REC93332-000U3		REC93317-325U0		REC93332-000W7		REC93306-207U0
F60A ETL	2002-06	REC93315-32224	REC93332-00001		REC93317-22204				REC93306-001U1
F60C ETL	2005-06	REC93315-32224	REC93332-00001		REC93317-22204				REC93306-001U1
FT60B ETL	2003-06		REC93332-000U3		REC93317-325U0				REC93306-207U0
FT60D ETL	2005-06		REC93332-000U3		REC93317-325U0				REC93306-207U0
70B	1984-98	REC93315-325V1	REC93332-00001		REC93317-22204		REC93332-000W7		REC93306-00702
70B EDOL	2001	REC93315-325V1	REC93332-00001		REC93317-22204		REC93332-00003		REC93306-00702
70B EO 70B ETO	2000	REC93315-325V1	REC93332-00001		REC93317-22204		REC93332-00003		REC93306-00702
70B ETOL	2001-06	REC93315-325V1	REC93332-00001		REC93317-22204		REC93332-00003		REC93306-00702
75A	1990-98	REC93315-325V1	REC93332-000U3		REC93317-325U0		REC93332-000W7		REC93306-207U0
75A E	1990-00	REC93315-325V1	REC93332-000U3		REC93317-325U0		REC93332-000U5		REC93306-207U0
75A EDL	2001-06	REC93315-325V1	REC93332-000U3		REC93317-325U0		REC93332-000W7		REC93306-207U0
75A EM	1992-93		REC93332-000U3		REC93317-325U0		REC93332-000U5		REC93306-207U0
75A ET	2000	REC93315-325V1			REC93317-325U0		REC93332-000U5		REC93306-207U0
75A ETL	2001-02	REC93315-325V1	REC93332-000U3		REC93317-325U0		REC93332-000W7		REC93306-207U0
75A MHD	2000	REC93315-325V1	REC93332-000U3		REC93317-325U0				REC93306-207U0
75C	1998	REC93315-325V1			REC93317-325U0		REC93332-000W7		REC93306-207U0
75C ETO	2000	REC93315-325V1	REC93332-000U3		REC93317-325U0		REC93332-000W7		REC93306-207U0
75C ETOL	2001-06	REC93315-325V1	REC93332-000U3		REC93317-325U0		REC93332-000W7		REC93306-207U0
80A	1985-96	REC93315-325V1	REC93332-000U3		REC93317-325U0		REC93332-000U5		REC93306-207U0
F80A	1999		REC93332-000U3		REC93317-325U0	REC93317-322V0			REC93306-207U0
F80A ET	2000		REC93332-000U3		REC93317-325U0	REC93317-322V0			REC93306-207U0
F80A ETL	2001-06		REC93332-000U3		REC93317-325U0	REC93317-322V0			REC93306-207U0
F80A ETX	2001		REC93332-000U3		REC93317-325U0	REC93317-322V0			REC93306-207U0
F80B ETL	2005-06		REC93332-000U3		REC93317-325U0	REC93317-322V0			REC93306-207U0
85A	1996-98	REC93315-325V1	REC93332-000U3		REC93317-325U0		REC93332-000W7		REC93306-207U0
85A E	1990-00	REC93315-325V1	REC93332-000U3		REC93317-325U0		REC93332-000U5		REC93306-207U0
85A ET	2000	REC93315-325V1	REC93332-000U3		REC93317-325U0		REC93332-000U5		REC93306-207U0
85A ETL	2001-02	REC93315-325V1	REC93332-000U3		REC93317-325U0		REC93332-000W7		REC93306-207U0
90A	1984-98	REC93315-325V1	REC93332-000U3		REC93317-325U0		REC93332-000W7		REC93306-207U0
90A ETO	2000	REC93315-325V1	REC93332-000U3		REC93317-325U0		REC93332-000U7		REC93306-207U0
90A ETOL	2001-06	REC93315-325V1	REC93332-000U3		REC93317-325U0		REC93332-000W7		REC93306-207U0
100A	1998	REC93315-628U9	REC93315-430V5 REC93341-930V2		REC93315-430U8	REC93315-425U7	REC93332-000U7		REC93306-208U0
100A ETO	2000	REC93315-628U9	REC93317-330U2 REC93341-930V2		REC93315-430U8	REC93315-425U7			REC93306-208U0
100A ETOL	2001	REC93315-628U9	REC93317-330U2 REC93341-930V2		REC93315-430U8	REC93315-425U7	REC93332-000U7		REC93306-208U0
F100A	1999		REC93332-000U3		REC93317-325U0	REC93317-322V0			REC93306-207U0
F100A ET	2000		REC93332-000U3		REC93317-325U0	REC93317-322V0			REC93306-207U0
F100A ETL	2001-06		REC93332-000U3		REC93317-325U0	REC93317-322V0			REC93306-207U0
F100A ETX	2001		REC93332-000U3		REC93317-325U0	REC93317-322V0			REC93306-207U0

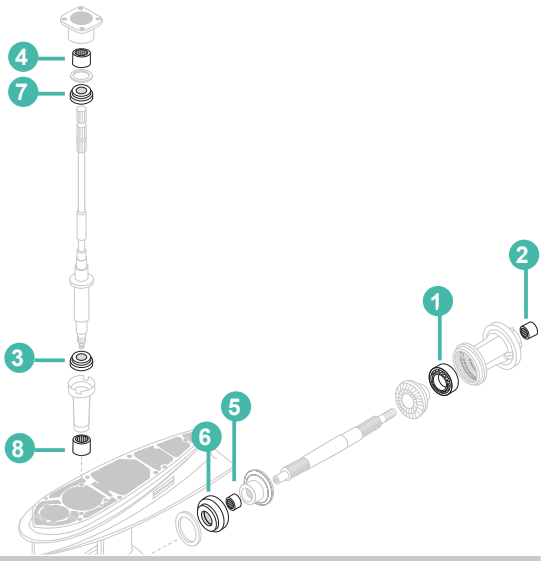

		1	2	3	4	5	6	7	8
F100B ETX	2005-06	REC93315-628U9	REC93317-330U2 REC93341-930V2		REC93315-430U8	REC93315-425U7	REC93332-000U7		REC93306-208U0
F100D ETL	2005-06		REC93332-000U3		REC93317-325U0	REC93317-322V0			REC93306-207U0
115A	1984-87	REC93315-628U9	REC93317-330U2 REC93341-930V2		REC93315-430U8	REC93315-425U7	REC93332-000U7		REC93306-208U0
115B	1988-95	REC93315-628U9	REC93317-330U2 REC93341-930V2		REC93315-430U8	REC93315-425U7	REC93332-000U7		REC93306-208U0
115B	1996	REC93315-628U9	REC93315-430V5 REC93341-930V2		REC93315-430U8	REC93315-425U7	REC93332-000U7		REC93306-208U0
115B ETO	1997-98	REC93315-628U9	REC93315-430V5 REC93341-930V2		REC93315-430U8	REC93315-425U7	REC93332-000U7		REC93306-208U0
115B ETO	1999-00	REC93315-628U9	REC93317-330U2			REC93315-425U7	REC93332-000U7		REC93306-208U0
115B ETOL	2001-02	REC93315-628U9	REC93317-330U2 REC93341-930V2		REC93315-430U8	REC93315-425U7	REC93332-000U7		REC93306-208U0
115C	1990-95	REC93315-628U9	REC93317-330U2 REC93341-930V2		REC93315-430U8	REC93315-425U7	REC93332-000U7	REC93315-430V5	REC93306-208U0
115C ETO	2000	REC93315-628U9	REC93317-330U2 REC93341-930V2		REC93315-430U8	REC93315-425U7	REC93332-000U7	REC93315-430V5	REC93306-208U0
115C ETOL	2001-06	REC93315-628U9	REC93317-330U2 REC93341-930V2		REC93315-43061	REC93315-425U7	REC93332-000U7	REC93315-430V5	REC93306-208U0
115C ETOX	2001-02	REC93315-628U9	REC93317-330U2 REC93341-930V2		REC93315-430U8	REC93315-425U7	REC93332-000U7	REC93315-430V5	REC93306-208U0
F115A ET	2000	REC93315-628U9	REC93317-330U2 REC93341-930V2		REC93315-430U8	REC93315-425U7	REC93332-000U7	REC93315-430V5	REC93306-208U0
F115A ETL F115A ETX	2001-06	REC93315-628U9	REC93317-330U2 REC93341-930V2		REC93315-430U8	REC93315-425U7	REC93332-000U7	REC93315-430V5	REC93306-208U0
FL115A ET	2000	REC93315-628U9	REC93317-330U2 REC93341-930V2		REC93315-430U8	REC93315-425U7	REC93332-000U7	REC93315-430V5	REC93306-208U0
FL115A ETX	2001-06	REC93315-628U9	REC93317-330U2 REC93341-930V2		REC93315-430U8	REC93315-425U7	REC93332-000U7	REC93315-430V5	REC93306-208U0
130B	1990-94	REC93315-628U9	REC93317-330U2 REC93341-930V2		REC93315-430U8	REC93315-425U7	REC93332-000U7	REC93315-430V5	REC93306-208U0
130B ETO	2000	REC93315-628U9	REC93317-330U2 REC93341-930V2		REC93315-430U8	REC93315-425U7	REC93332-000U7	REC93315-430V5	REC93306-208U0
130B ETOL	2001-06	REC93315-628U9	REC93317-330U2 REC93341-930V2		REC93315-43061	REC93315-425U7	REC93332-000U7	REC93315-430V5	REC93306-208U0
130B ETOX	2001	REC93315-628U9	REC93317-330U2 REC93341-930V2		REC93315-430U8	REC93315-425U7	REC93332-000U7	REC93315-430V5	REC93306-208U0
L130B	1991-94	REC93315-628U9	REC93317-330U2 REC93341-930V2		REC93315-430U8	REC93315-425U7	REC93332-000U7	REC93315-430V5	REC93306-208U0
L130B	1995-98		REC93315-430V5 REC93341-930V2		REC93315-430U8	REC93315-425U7	REC93332-000U7		REC93306-208U0
L130B ETO	2000	REC93315-628U9	REC93317-330U2		REC93315-430U8	REC93315-425U7	REC93332-000U7	REC93315-430V5	REC93306-208U0
L130B ETOX	2001	REC93315-628U9	REC93317-330U2 REC93341-930V2		REC93315-430U8	REC93315-425U7	REC93332-000U7	REC93315-430V5	REC93306-208U0
140A	1984-87	REC93315-628U9	REC93317-330U2 REC93341-930V2		REC93315-430U8	REC93315-425U7	REC93332-000U7		REC93306-208U0
140B	1988-89	REC93315-628U9	REC93317-330U2 REC93341-930V2		REC93315-430U8	REC93315-425U7	REC93332-000U7		REC93306-208U0
L140B	1989	REC93315-628U9	REC93317-330U2 REC93341-930V2		REC93315-430U8	REC93315-425U7	REC93332-000U7	REC93315-430V5	REC93306-208U0
150A	1984-89	REC93311-928U5	REC93317-330U2 REC93341-930V2		REC93315-430U8	REC93315-425V3	REC93332-000V3 STD. ROT REC93390-000U2 C.ROT.	REC93315-430V5	REC93306-209U0 STD. ROT REC93332-00048 C.ROT.
150A ET	1998-00	REC93311-928U5	REC93317-330U2 REC93341-930V2		REC93315-430U8	REC93315-425V3	REC93332-000V3		REC93306-209U0
150A ETO	1986-87				REC93315-430U8		REC93390-000U2		REC93390-000U2
150A ETL	2001-02	REC93311-928U5	REC93317-330U2 REC93341-930V2		REC93315-430U8	REC93315-425V3	REC93332-000V3		REC93306-209U0
150A ETX	2001-02	REC93311-928U5	REC93317-330U2 REC93341-930V2		REC93315-430U8	REC93315-425V3	REC93332-000V3		REC93306-209U0
150C	1990-94	REC93311-928U5	REC93317-330U2 REC93341-930V2		REC93315-430U8	REC93315-425V3	REC93332-000V3		REC93306-209U0
150F	1996-98	REC93311-928U5	REC93315-430V5 REC93341-930V2		REC93315-430U8	REC93315-425V3	REC93390-000U2		REC93332-00048
150F	1997-98	REC93311-928U5	REC93315-430V5 REC93341-930V2		REC93315-430U8	REC93315-425V3	REC93332-000V3 STD. ROT REC93390-000U2 C.ROT		REC93306-209U0 STD. ROT REC93332-00048 C.ROT.

		1	2	3	4	5	6	7	8
150F ETO	2000	REC93311-928U5	REC93317-330U2 REC93341-930V2		REC93315-430U8	REC93315-425V3	REC93332-000V3 STD. ROT REC93390-000U2 C.ROT.		REC93306-209U0 STD. ROT REC93332-00048 C.ROT.
150F ETOL	2001-06	REC93311-928U5	REC93317-330U2 REC93341-930V2		REC93315-43061	REC93315-425V3	REC93332-000V3 STD. ROT REC93390-000U2 C.ROT.		REC93306-209U0 STD. ROT REC93332-00048 C.ROT.
150F ETOX	2001-06	REC93311-928U5	REC93317-330U2 REC93341-930V2		REC93315-43061	REC93315-425V3	REC93332-000V3 STD. ROT REC93390-000U2 C.ROT.		REC93306-209U0 STD. ROT REC93332-00048 C.ROT.
D150H	1999	REC93315-628U9	REC93317-330U2 REC93341-930V2		REC93315-43061		REC93332-00048		REC93332-00048
D150H ETOL	2001-02	REC93315-628U9	REC93317-330U2 REC93341-930V2		REC93315-43061		REC93332-00048		REC93332-00048
F150A ETL F150A ETX FL150A ETL FL150AETX	2004-06	REC93311-928U5	REC93317-330U2 REC93341-930V2		REC93315-43061	REC93315-425V3	REC93332-000V3 STD. ROT REC93390-000U2 C.ROT.		REC93306-209U0 STD. ROT REC93332-00048 C.ROT.
L150A	1988-89	REC93311-928U5	REC93317-330U2 REC93341-930V2		REC93315-430U8		REC93390-000U2	REC93315-430V5	REC93390-000U2
L150C	1990-94	REC93311-928U5	REC93317-330U2 REC93341-930V2		REC93315-430U8	REC93315-425V3	REC93390-000U2	REC93315-430V5	REC93306-209U0
L150C	1995		REC93315-430V5				REC93390-000U2		REC93332-00048
L150F	1996-98	REC93311-928U5	REC93315-430V5 REC93341-930V2		REC93315-430U8	REC93315-425V3	REC93332-000V3 STD. ROT REC93390-000U2 C.ROT.		REC93306-209U0 STD. ROT REC93332-00048 C.ROT.
L150F ETO	2000-01	REC93311-928U5	REC93317-330U2 REC93341-930V2		REC93315-430U8	REC93315-425V3	REC93332-000V3 STD. ROT REC93390-000U2 C.ROT		REC93306-209U0 STD. ROT REC93332-00048 C.ROT.
L150F ETOL L150F ETOX	2001	REC93311-928U5	REC93317-330U2 REC93341-930V2		REC93315-430U8	REC93315-425V3	REC93332-000V3 STD. ROT REC93390-000U2 C.ROT		REC93306-209U0 STD. ROT REC93332-00048 C.ROT.
LZ150P	2000-02				REC93315-430U8		REC93390-000U2		REC93390-000U2
LZ150P ETOX	2000-06	REC93311-928U5	REC93317-330U2 REC93341-930V2		REC93315-43061	REC93315-425V3	REC93332-000V3 STD. ROT REC93390-000U2 C.ROT.		REC93306-209U0 STD. ROT REC93332-00048 C.ROT.
LZ150T XRC	2004						REC93390-000U2		REC93390-000U2
Z150P ETO	2000	REC93311-928U5	REC93317-330U2 REC93341-930V2		REC93315-430U8	REC93315-425V3	REC93332-000V3 STD. ROT REC93390-000U2 C.ROT.		REC93306-209U0 STD. ROT REC93332-00048 C.ROT.
Z150P ETOL Z150P ETOX	2001-06	REC93311-928U5	REC93317-330U2 REC93341-930V2		REC93315-43061	REC93315-425V3	REC93332-000V3 STD. ROT REC93390-000U2 C.ROT.		REC93306-209U0 STD. ROT REC93332-00048 C.ROT.
Z150Q ETO	2000	REC93311-928U5	REC93317-330U2 REC93341-930V2		REC93315-430U8	REC93315-425V3	REC93332-000V3		REC93306-209U0
Z150Q ETOL	2001-06	REC93311-928U5	REC93317-330U2 REC93341-930V2		REC93315-43061	REC93315-425V3	REC93332-000V3		REC93306-209U0
175A	1984-89	REC93311-928U5	REC93317-330U2 REC93341-930V2		REC93315-430U8	REC93315-425V3	REC93332-000V3 STD. ROT REC93390-000U2 C.ROT.	REC93315-430V5	REC93306-209U0 STD. ROT REC93332-00048 C.ROT
175A ETO	1986-87	REC93311-928U5	REC93317-330U2		REC93315-430U8	REC93315-425V3	REC93390-000U2		REC93390-000U2
175B	1990-94	REC93311-928U5	REC93317-330U2 REC93341-930V2		REC93315-430U8	REC93315-425V3	REC93332-000V3		REC93306-209U0
175B	1995	REC93311-928U5	REC93315-430V5		REC93315-430U8	REC93315-425V3	REC93390-000U2		REC93332-00048
175D	1996-98	REC93311-928U5	REC93315-430V5 REC93341-930V2		REC93315-430U8	REC93315-425V3	REC93332-000V3 STD. ROT REC93390-000U2 C.ROT.		REC93306-209U0 STD. ROT REC93332-00048 C.ROT.
175D ETO	2000	REC93311-928U5	REC93317-330U2 REC93341-930V2		REC93315-430U8	REC93315-425V3	REC93332-000V3 STD. ROT REC93390-000U2 C.ROT.		REC93306-209U0 STD. ROT REC93332-00048 C.ROT.
175D ETOL	2001-03	REC93311-928U5	REC93317-330U2 REC93341-930V2		REC93315-430U8	REC93315-425V3	REC93332-000V3 STD. ROT REC93390-000U2 C.ROT.		REC93306-209U0 STD. ROT REC93332-00048 C.ROT.
175D ETOX	2001-02	REC93311-928U5	REC93317-330U2 REC93341-930V2		REC93315-430U8	REC93315-425V3	REC93332-000V3 STD. ROT REC93390-000U2 C.ROT.		REC93306-209U0 STD. ROT REC93332-00048 C.ROT.
Z175G ETOX	2001-06	REC93311-928U5	REC93317-330U2 REC93341-930V2		REC93315-43061	REC93315-425V3	REC93332-000V3 STD. ROT REC93390-000U2 C.ROT.		REC93306-209U0 STD. ROT REC93332-00048 C.ROT.
Z175H ETOL	2001	REC93311-928U5	REC93317-330U2 REC93341-930V2		REC93315-430U8	REC93315-425V3	REC93332-000V3		REC93306-209U0
200A	1984-89	REC93311-928U5	REC93317-330U2 REC93341-930V2		REC93315-430U8	REC93315-425V3	REC93332-000V3 STD. ROT REC93390-000U2 C.ROT	REC93315-430V5	REC93306-209U0 STD. ROT REC93332-00048 C.ROT.
200A ETO	1986-87	REC93311-928U5	REC93317-330U2		REC93315-430U8		REC93390-000U2		REC93390-000U2

		1	2	3	4	5	6	7	8
200B	1990-94	REC93311-928U5	REC93317-330U2 REC93341-930V2		REC93315-430U8	REC93315-425V3	REC93332-000V3		REC93306-209U0
200B	1995	REC93311-928U5	REC93315-430V5		REC93315-430U8	REC93315-425V3	REC93390-000U2		REC93332-00048
200F	1996-98	REC93311-928U5	REC93315-430V5 REC93341-930V2		REC93315-430U8	REC93315-425V3	REC93332-000V3 STD. ROT REC93390-000U2 C.ROT.		REC93306-209U0 STD. ROT REC93332-00048 C.ROT.
200F ETO	2000	REC93311-928U5	REC93317-330U2 REC93341-930V2		REC93315-430U8	REC93315-425V3	REC93332-000V3 STD. ROT REC93390-000U2 C.ROT.		REC93306-209U0 STD. ROT REC93332-00048 C.ROT
200F ETOL 200F ETOX	2001-06	REC93311-928U5	REC93317-330U2 REC93341-930V2		REC93315-43061	REC93315-425V3	REC93332-000V3 STD. ROT REC93390-000U2 C.ROT.		REC93306-209U0 STD. ROT REC93332-00048 C.ROT.
200G	1999	REC93311-928U5	REC93317-330U2 REC93341-930V2		REC93315-430U8	REC93315-425V3	REC93332-000V3		REC93306-209U0
200G ETO	2000	REC93311-928U5	REC93317-330U2 REC93341-930V2		REC93315-430U8	REC93315-425V3	REC93332-000V3		REC93306-209U0
200G ETOL	2001-03	REC93311-928U5	REC93317-330U2 REC93341-930V2		REC93315-430U8	REC93315-425V3	REC93332-000V3		REC93306-209U0
F200A ETX	2002-06	REC93311-83280	REC93317-330U2		REC93315-43061		REC93332-000W1		REC93306-209U0 STD. ROT REC93332-00048 C.ROT.
F200C ETX	2006	REC93311-83280	REC93317-330U2				REC93332-000W1		REC93306-209U0 STD. ROT REC93332-00048 C.ROT.
FL200A ETX	2002-06	REC93311-83280	REC93317-330U2		REC93315-43061		REC93332-000W1		REC93306-209U0 STD. ROT REC93332-00048 C.ROT
FL200C ETX	2006	REC93311-83280	REC93317-330U2				REC93332-000W1		REC93306-209U0 STD. ROT REC93332-00048 C.ROT
L200A	1988-89	REC93311-928U5	REC93317-330U2 REC93341-930V2		REC93315-430U8	REC93315-425V3	REC93390-000U2	REC93315-430V5	REC93332-00048
L200B	1990-94	REC93311-928U5	REC93317-330U2 REC93341-930V2			REC93315-425V3	REC93332-000V3 STD. ROT REC93390-000U2 C.ROT	REC93315-430V5	REC93306-209U0
L200F	1996-98	REC93311-928U5	REC93315-430V5 REC93341-930V2		REC93315-430U8	REC93315-425V3	REC93332-000V3 STD. ROT REC93390-000U2 C.ROT.		REC93306-209U0 STD. ROT REC93332-00048 C.ROT
L200F ETO	2000	REC93311-928U5	REC93317-330U2 REC93341-930V2		REC93315-430U8	REC93315-425V3	REC93332-000V3 STD. ROT REC93390-000U2 C.ROT.		REC93306-209U0 STD. ROT REC93332-00048 C.ROT.
L200F ETOL	2001-06	REC93311-928U5	REC93317-330U2 REC93341-930V2		REC93315-43061	REC93315-425V3	REC93332-000V3 STD. ROT REC93390-000U2 C.ROT.		REC93306-209U0 STD. ROT REC93332-00048 C.ROT.
L200F ETOX	2001	REC93311-928U5	REC93317-330U2		REC93315-430U8	REC93315-425V3	REC93332-000V3 STD. ROT REC93390-000U2 C.ROT.		REC93306-209U0 STD. ROT REC93332-00048 C.ROT.
LZ200N	2000						REC93390-000U2		REC93390-000U2
LZ200N ETO	2000	REC93311-928U5	REC93317-330U2		REC93315-430U8	REC93315-425V3	REC93332-000V3		REC93306-209U0 STD. ROT REC93332-00048 C.ROT.
LZ200N ETOX	2001-07	REC93311-928U5	REC93317-330U2 REC93341-930V2		REC93315-43061	REC93315-425V3	REC93332-000V3 STD. ROT REC93390-000U2 C.ROT.		REC93306-209U0 STD. ROT REC93332-00048 C.ROT.
LZ200T R	2005						REC93390-000U2		REC93390-000U2
LZ200T XRC	2004-06						REC93390-000U2		REC93390-000U2
LZ200T XRD	2005						REC93390-000U2		REC93390-000U2
Z200N ETO	2000	REC93311-928U5	REC93317-330U2 REC93341-930V2		REC93315-430U8	REC93315-425V3	REC93332-000V3		REC93306-209U0 STD. ROT REC93332-00048 C.ROT.
Z200N ETOL Z200N ETOX	2001-06	REC93311-928U5	REC93317-330U2 REC93341-930V2		REC93315-43061	REC93315-425V3	REC93332-000V3 STD. ROT REC93390-000U2 C.ROT.		REC93306-209U0 STD. ROT REC93332-00048 C.ROT.
Z200P ETOL	2003-06	REC93311-928U5	REC93317-330U2 REC93341-930V2		REC93315-43061	REC93315-425V3	REC93332-000V3		REC93306-209U0
220A	1984-86	REC93311-928U5	REC93317-330U2 REC93341-930V2		REC93315-430U8	REC93315-425V3	REC93332-000V3		REC93306-209U0
225A	1987-89	REC93311-928U5	REC93317-330U2 REC93341-930V2		REC93315-430U8	REC93315-425V3			REC93306-209U0
225B	1990-94	REC93311-928U5	REC93317-330U2 REC93341-930V2		REC93315-430U8	REC93315-425V3	REC93332-000V3		REC93306-209U0
225B	1995	REC93311-928U5	REC93315-430V5			REC93315-425V3	REC93332-000V3		REC93306-209U0
225C	1994	REC93311-83280	REC93317-330U2		REC93315-430U8		REC93332-000W1		REC93306-210U0

		1	2	3	4	5	6	7	8
225C	1995	REC93311-83280	REC93315-430V5						
225D	1996-98	REC93311-928U5	REC93315-430V5 REC93341-930V2		REC93315-430U8	REC93315-425V3	REC93332-000V3		REC93306-209U0
225D ETO	2000	REC93311-928U5	REC93317-330U2 REC93341-930V2		REC93315-430U8	REC93315-425V3	REC93332-000V3		REC93306-209U0
225D ETOL 225D ETOX	2001-03	REC93311-928U5	REC93317-330U2 REC93341-930V2		REC93315-430U8	REC93315-425V3	REC93332-000V3		REC93306-209U0
225G	1999	REC93311-83280	REC93317-330U2		REC93315-43061		REC93332-000W1		REC93306-210U0
225G ETO	2000	REC93311-83280	REC93317-330U2		REC93315-43061		REC93332-000W1		REC93306-210U0
225G ETOL	2001-03	REC93311-928U5	REC93317-330U2		REC93315-43061		REC93332-000W1		REC93306-210U0
F225A ETU	2003-06		REC93317-330U2		REC93315-43061		REC93332-000W1		REC93306-209U0 STD. ROT REC93332-00048 C.ROT.
F225A ETX FL225A ETX	2002-06	REC93311-83280	REC93317-330U2		REC93315-43061		REC93332-000W1		REC93306-209U0 STD. ROT REC93332-00048 C.ROT.
L225C	1994	REC93311-83280	REC93317-330U2		REC93315-430U8		REC93332-000W1		REC93306-210U0
L225C	1995	REC93311-83280	REC93315-430V5				REC93332-000W1		REC93306-210U0
250A	1990-94	REC93311-83280	REC93317-330U2		REC93315-430U8		REC93332-000W1		REC93306-210U0
250A	1995-98	REC93311-83280	REC93315-430V5				REC93332-000W1		REC93306-210U0
250A ETO	2000	REC93311-83280	REC93317-330U2		REC93315-430U8		REC93332-000W1		REC93306-210U0
250A ETOX	2001-06	REC93311-83280	REC93317-330U2		REC93315-43061		REC93332-000W1		REC93306-210U0
250B	1997-98	REC93311-83280	REC93317-330U2		REC93315-430U8		REC93332-000W1		REC93306-210U0
250B ETO	2000	REC93311-83280	REC93317-330U2		REC93315-430U8		REC93332-000W1		REC93306-210U0
250B ETOX	2001-03	REC93311-83280	REC93317-330U2		REC93315-430U8		REC93332-000W1		REC93306-210U0
250G ETOX	2006	REC93311-83280	REC93317-330U2		REC93315-43061		REC93332-000W1		REC93306-210U0
F250A ETU	2006	REC93311-83280	REC93317-330U2				REC93332-000W1		REC93306-210U0
F250A ETX FL250A ETU FL250 ETX	2006	REC93311-83280	REC93317-330U2				REC93332-000W1		REC93306-209U0 STD. ROT REC93332-00048 C.ROT.
L250A	1990-94	REC93311-83280	REC93317-330U2		REC93315-430U8		REC93332-000W1	REC93315-430U8	REC93315-430U8
L250A	1995-98	REC93311-83280	REC93315-430V5				REC93332-000W1		REC93306-210U0
L250A ETO	2000	REC93311-83280	REC93317-330U2		REC93315-430U8		REC93332-000W1		REC93306-210U0
L250A ETOX	2001-06	REC93311-83280	REC93317-330U2		REC93315-43061		REC93332-000W1		REC93306-210U0
L250B	1997-98	REC93311-83280	REC93317-330U2		REC93315-430U8		REC93332-000W1		REC93306-210U0
L250B ETO	2000	REC93311-83280	REC93317-330U2		REC93315-430U8		REC93332-000W1		REC93306-210U0
L250B ETOX	2001-03	REC93311-83280	REC93317-330U2		REC93315-430U8		REC93332-000W1		REC93306-210U0
L250G ETOX	2006	REC93311-83280	REC93317-330U2		REC93315-43061		REC93332-000W1		REC93306-210U0
LZ250D EOX	2003-06	REC93311-83280	REC93317-330U2		REC93315-43061		REC93332-000W1		REC93306-209U0 STD. ROT REC93332-00048 C.ROT.
Z250D ETOU	2003	REC93311-83280	REC93317-330U2		REC93315-43061		REC93332-000W1		REC93306-209U0 STD. ROT REC93332-00048 C.ROT.
Z250D ETOX Z250F ETOL	2003-06	REC93311-83280	REC93317-330U2		REC93315-43061		REC93332-000W1		REC93306-209U0 STD. ROT REC93332-00048 C.ROT.
LZ300A ETOX Z300A ETOU Z300A ETOX	2004-06	REC93311-83280	REC93317-330U2				REC93332-000W1		REC93306-209U0 STD. ROT REC93332-00048 C.ROT.

SISTEMA DE PROPULSIÓN
PROPULSION SYSTEM
SISTEMA DI PROPULSIONE
SYSTEME DE PROPULSION

HÉLICES ALUMINIO E INOXIDABLE DE 3 Y 4 PALAS | 3 & 4 BLADE ALUMINIUM & SS PROPELLERS | ELICHE ALLUMINIO E INOX DA 3 E 4 PALE | HELICE ALUMINIUM ET INOX 3 ET 4 PALES

CÓDIGO DE REFERENCIAS | PART NO. CODING SYSTEM | SISTEMA DI CODICE | CODAGE DES REFERENCES

SOLAS

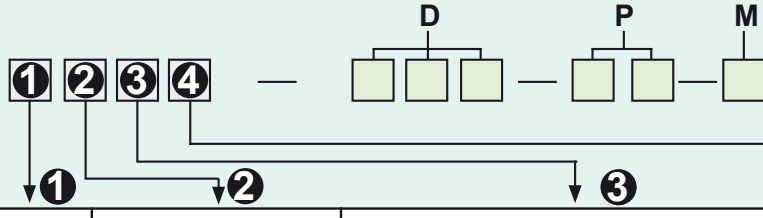

1	2	3	4
1. Mercury, Mariner **2.** Johnson, Evinrude **3.** Yamaha **4.** Suzuki **5.** Tohatsu **6.** **7.** **8.** Volvo Penta **9.** Rubex System	0.5,6,8 and 9.8 HP Group **1.** A Group **2.** B Group **3.** C Group **4.** D Group **5.** E Group **6.** F Group **7.** VP (Std. Hub) **8.** VP (Long Hub)	**1.** AL **2. Saturn** (Acero inox. | Stainless Steel | Acciaio inox. | Acier inox.) **3. New Saturn** (Acero inox. | Stainless Steel | Acciaio inox. | Acier inox.) **4. Titan** (Acero inox. | Stainless Steel | Acciaio inox. | Acier inox.) **5. HR Titan** (Acero inox. | Stainless Steel | Acciaio inox. | Acier inox.)	**1.** 3R Rubber Hub **2.** 3L Rubber Hub **3.** 4R Rubber Hub **4.** 4L Rubber Hub

Ejemplo | Note | Esempio | Exemple

D (Ø) — i.e. 13 1/4 ➔133, 13.75 ➔138

P (Pitch) — i.e. 17" ➔17, 13" ➔13

M

P Pin Drive Propeller
1, 2, 5 Different Propeller Hub Fitting Spec.

AMITA 3

Hélice de aluminio de 3 palas con núcleo de goma de gran resistencia.

3 blade aluminum propeller with heavy duty rubber hub.

Eliche di alluminio a 3 pale con mozzi in gomma ad alta resistenza.

Hélice en aluminium 3 pales avec moyeu en caoutchouc



LEXOR

SOLAS

Hélices de acero inoxidable de 3 palas.
Gran diámetro del área de las palas para barcos pesados.
Gran rendimiento en alta velocidad sin sacrificar las velocidades medias.
Excelente ahorro de combustible.

Three blade stainless steel propeller.
Large diameter and blade area for big boat loads.
Great high speed performance sithout sacrificing mid-range speeds.
Excellent fuel economy.

Eliche di acciaio inox a 3 pale.
Grande diametro delle pale per imbarcazioni pesanti.
Grandi prestazioni ad alta velocità senza sacrificare velocità medie.
Eccellente risparmio di carburante.

Hélice inox 3 Pales,grand diamètre pour bateaux lourds.Excellentes performances à grande vitesse sans sacrifier les vitesses moyennes.
Excellente économie de carburant.



AMITA 4

SOLAS

Hélices de aluminio de 4 palas con núcleo de goma de gran resistencia.
Van muy suaves a poca velocidad y hace el barco muy manejable con la mar picada.

4 Blade aluminum propeller with heavy duty rubber hub.
Smoother low speed makes the offshore boating activity much easier.

Eliche di alluminio a 4 pale con mozzo in gomma ad alta resistenza.
Molto morbido a bassa velocità e rende la barca molto maneggevole con mare cattivo.

Hélice en aluminium 4 pales avec moyeu en caoutchouc..Permet d'aller doucement à basse vitesse et rende le bateau très maniable lorsque la mer est agitée



NEW SATURN

SOLAS

Hélices de acero inoxidable de 3 palas.
Ofrece buena aceleración y rendimiento.
Tamaño más pequeño que ofrece un diámetro extragrande.

Three blade stainless steel propeller.
Offers good acceleration & all-round performance.
Smaller pitch sizes offered in extra large diameter with increased blade area.

Eliche di acciaio inox a 3 pale.
Buona accelerazione.
Piccole dimensione che offre un più grande diametro.

Hélice inox 3 pales, offrant de bonnes accélérations et performances. Taille de pas reduite pour les modèles de grands diamètres avec une surface de pale plus importante.



GUÍA DE HÉLICES CON NÚCLEO INTEGRADO — PROPELLERS APPLICATION WITH RUBBER HUB — GUIDA ELICHE CON MOZZO — GUIDE DES HELICES ET MOYEUX

	2T STROKES	4T STROKES	R.O. OEM	A	G	B	D	P	R	AL		INOX STAINLESS STEEL	
2.5 - 6 HP	✓	✓	6L5-45949-00-EL	9		3	7 1/4	5	R	SOL3011-073-05S	AMITA 3		
			6E0-45943-01-EL				7 1/2	7	R	SOL3011-075-07S	AMITA 3		
			6L5-45943-00-EL				7 1/4	6	R	PAF2.6-03010000			
			6E0-45943-01-EL				7 1/2	7	R	PAF4-03070000			
6.8 HP F6, F8, F9.9	✓	✓	6G1-45947-00-EL	7		3	8 1/2	7	R	SOL3011-085-07	AMITA 3		
			6G1-45943-00-EL				8 1/2	8	R	SOL3011-085-08	AMITA 3		
			6G1-45941-00-EL				8 1/2	9	R	SOL3011-085-09	AMITA 3		
8 HP (1976-83)	✓		647-45943-00-EL	PIN		3	8 1/4	8	R	SOL2011-083-08P	AMITA 3		
							9	7	R	SOL3011-090-07-P	AMITA 3		
9.9 15 T8 T9.9 F9.9 (2000-07) F15 F20 Hight Thrust	✓	✓	683-45947-00-EL	8	2 1/2	3		7	R	SOL3111-093-07	AMITA 3		
			683-45945-00-EL				9 1/4	8	R	SOL3111-093-08	AMITA 3		
			683-45942-00-EL				9 1/4	9		SOL3111-093-09	AMITA 3		
			683-45943-00-EL				9 1/4	10	R	SOL3111-093-10	AMITA 3		
			63V-45943-10-00				9 1/4	11	R	SOL3111-093-11	AMITA 3		
			683-45941-00-00				9 1/4	11	R	PAF15-06090000			
							9 1/4	12	R	SOL3111-093-12	AMITA 3		
20 (1996-97) 25 (1980 +) 30 (1979 +) F25	✓	✓	664-45941-01-EL	10	3	3	9 7/8	9	R	SOL3211-099-09			
			664-45945-00-EL				9 7/8	10	R	SOL3211-099-10			
			664-45947-01-EL				9 7/8	11	R	SOL3211-099-11			
			664-45954-00-EL				9 7/8	12	R	SOL3211-099-12			
			664-45949-02-EL				9 7/8	13	R	SOL3211-099-13			
							10 3/4	10	R			SOL3231-108-10	NEW SATURN
			664-45972-00-98				10 1/2	11	R			SOL3231-105-11	NEW SATURN
			664-45970-00-98				10 1/4	12	R			SOL3231-103-12	NEW SATURN
			MAR-6YT30-02-12				10 1/8	13	R			SOL3231-101-13	NEW SATURN
40 48 50 (NO T50) 55 60 (-1991) F30 F40 (1999+) F50 (1995+) F60 (1999+)			663-45956-01-EL	13	3 1/2	3	12 1/4	9	R	SOL3311-121-09	AMITA 3		
			663-45947-02-EL				11 5/8	11	R	SOL3311-116-11	AMITA 3		
			663-45952-02-EL				11 3/4	12	R	SOL3311-114-12	AMITA 3		
			663-45945-02-EL				11 1/8	13	R	SOL3311-111-13	AMITA 3		
			69W-45941-00-EL				11 1/8	13	R	PAT40-04070000			
			663-45958-01-EL				11 1/4	14	R	SOL3311-111-14	AMITA 3		
			663-45943-02-EL				11	15	R	SOL3311-110-15	AMITA 3		
			663-45949-01-EL				10 3/4	16	R	SOL3311-110-16	AMITA 3		
			663-45941-01-EL				11	17	R	SOL3311-110-17	AMITA 3		
							11 7/8	10	R			SOL3331-119-10	NEW SATURN
							11 5/8	11	R			SOL3331-116-11	NEW SATURN
							11 3/8	12	R			SOL3331-114-12	NEW SATURN
							11 1/8	13	R			SOL3331-111-13	NEW SATURN
							11 1/8	14	R			SOL3331-111-14	NEW SATURN
40 HP				PIN		3	11 1/2	10	R	SOL3311-115-10-P	AMITA 3		
							11 1/2	11	R	SOL3311-115-11-P	AMITA 3		
							11 1/2	12	R	SOL3311-115-12-P	AMITA 3		
60 (1992+) 70 (1984+) 75 (1994+) 80 (1978-89) 85 (1991-97) 90 (1984+) 115 (1984+) 130 (1984+) F75 (2003+) F80 (1999+) F90 (2003+) F100 (1999+) F115 (2000+) T50 (1996+) T60 (2003+) F70 (2010+)			6E5-45954-00-EL	15	4 1/4	3	14	11	R	SOL3411-140-11	AMITA 3		
			6E5-45949-00-EL				13 1/4	13	R	SOL3411-138-13 SOL3413-133-13	AMITA 3 AMITA 4		
							13 5/8	13	L	SOL3412-138-13			
			6E5-45947-00-EL				13 1/2	15	R	SOL3411-135-15 SOL3413-130-15	AMITA 3 AMITA 4		
							13 1/2	15	L	SOL3412-135-15			
			6E5-45945-00-EL				13 1/4	17	R	SOL3411-133-17 SOL3413-128-17	AMITA 3 AMITA 4		
							13 1/4	17	L	SOL3412-133-17			
			6E5-45941-00-EL				13	19	R	SOL3411-130-19 SOL3413-125-19	AMITA 3 AMITA 4		
			6E5-45943-00-EL				13	21	R	SOL3411-130-21 SOL3413-125-21	AMITA 3 AMITA 4		
			688-45978-60-98				13 1/2	15	R			SOL3431-135-15	NEW SATURN
			688-45930-02-98				13	17	R			SOL3431-133-17	NEW SATURN
							13	17	L			SOL3432-133-17	NEW SATURN
			688-45970-03-98				13	19	R			SOL3431-130-19	NEW SATURN
							13	19	L			SOL3432-130-19	NEW SATURN
			688-45972-02-98				13	21	R			SOL3431-130-21	NEW SATURN

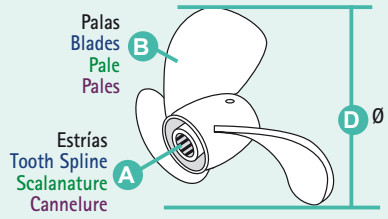

P Paso
Pitch
Passo
Pas

R Rotación L (izquierda) R (derecha)
Rotation L (left) R (Right)
Rotazione L (SX) R (DX)
Rotation L (gauche) R (droit)

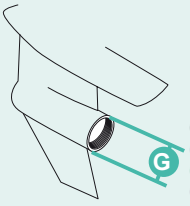

Ø Carcasa
Ø Gearcase
Ø Carter
Ø Carter

	2T STROKES	4T STROKES	R.O. OEM	A	G	B	D	P	R	AL		INOX STAINLESS STEEL	
			6G5-45941-00-98				15	15	R	SOL3511-150-15 SOL3513-148-15			
			6G5-45952-00-98				15	15	L	SOL3512-150-15 SOL3514-148-15	AMITA 3 AMITA 4		
			6G5-45947-01-98				14,8	17	R	SOL3511-148-17 SOL3513-145-17	AMITA 3 AMITA 4		
			6K1-45947-00-98				14,8	17	L	SOL3512-148-17 SOL3514-145-17	AMITA 3 AMITA 4		
			6G5-45945-01-98				14,5	19	R	SOL3511-145-19 SOL3513-143-19	AMITA 3 AMITA 4		
			6K1-45945-01-98				14,5	19	L	SOL3512-145-19 SOL3514-143-19	AMITA 3 AMITA 4		
			6G5-45949-00-98				14,3	21	R	SOL3511-143-21 SOL3513-140-21	AMITA 3 AMITA 4		
150 (1986+) 175 (1984+) 200 (1984+)							14,3	21	L	SOL3512-143-21 SOL3514-140-21	AMITA 3 AMITA 4		
200VMAX (2001+) 220 (1987-88) 225 (1986+)			6G5-45949-00-98				14,2	23	R	SOL3511-142-23	AMITA 3		
							14,2	23	L	SOL3512-142-23	AMITA 3		
250 (1990+)			6G5-45941-00-98				15 3/4	15	R			SOL3571-158-15	LEXOR
225VMAX (2001+)			6G5-45952-00-98				15 3/4	15	L			SOL3572-158-15	LEXOR
300 (2004+), F150 (2004+)			6G5-45947-01-98				15 1/2	17	R			SOL3571-155-17	LEXOR
F200 (2002+)			6K1-45947-00-98				15 1/2	17	L			SOL3572-155-17	LEXOR
F225 (2002+)			6G5-45945-01-98			3	15 1/4	19	R			SOL3571-153-19	LEXOR
F250 (2005+)			6K1-45945-01-98				15 1/4	19	L			SOL3572-153-19	LEXOR
F300 (2003+)			6G5-45949-00-98				15	21	R			SOL3571-150-21	LEXOR
dentro-fueraborda							15	21	R			SOL3572-150-21	LEXOR
Intro-outboard Intro-Fuoribordo			6G5-45949-00-98				14	23	R			SOL3571-148-23	LEXOR
Intro-horsbord							14	23	L			SOL3572-148-23	LEXOR
							14	25	R			SOL3571-145-25	LEXOR
3.0L-7.4L							14	27	R			SOL3571-145-27	LEXOR
			6G5-45970-02-98				15 1/4	15	R			SOL3531-145-15	NEW SATURN
			6K1-45970-01-98				15 1/4	15	L			SOL3532-145-15	NEW SATURN
			6G5-45978-03-98				13 3/4	17	R			SOL3531-143-17	NEW SATURN
			6K1-45978-02-98				13 3/4	17	L			SOL3532-143-17	NEW SATURN
			6G5-45974-03-98				13 3/4	19	R			SOL3531-140-19	NEW SATURN
			6K1-45974-02-98				13 3/4	19	L			SOL3532-140-19	NEW SATURN
			6G5-45972-02-98				13 3/4	21	R			SOL3531-140-21	NEW SATURN
			6K1-45972-01-98				13 3/4	21	L			SOL3532-140-21	NEW SATURN
			6G5-45976-01-98				13 3/8	23	R			SOL3531-140-23	NEW SATURN
			6K1-45976-00-98				13 3/8	23	L			SOL3532-140-23	NEW SATURN

HÉLICES PARA NÚCLEO INTERCAMBIABLE — PROPELLERS FOR INTERCHANGEABLE HUB — ELICHE PER MOZZO INTERCAMBIABILE — HELICES AVEC MOYEU INTERCHANGEABLE

	B	D	P	R	AL
C 30-75 HP	3	12.1	9	R	SOL9311-121-09
		12	10	R	SOL9311-120-10
		11-6	11	R	SOL9311-116-11
		11.4	12	R	SOL9311-114-12
		11.1	13	R	SOL9311-111-13
		11.1	14	R	SOL9311-111-14
		11	15	R	SOL9311-110-15
D 40-140 HP	3	14	9	R	SOL9411-140-09
		14	11	R	SOL9411-140-11
		13.75	13	R	SOL9411-138-13
		13.50	15	R	SOL9411-135-15
		13.25	17	R	SOL9411-133-17
		13.2	19	R	SOL9411-132-19
		13.2	21	R	SOL9411-132-21
E 135-350 HP	3	15.5	11	R	SOL9511-155-11
		15.3	13	R	SOL9511-153-13
		16	13	R	SOL9511-160-13
		15	15	R	SOL9511-150-15
		15	15	L	SOL9511-150-15
		14.8	17	R	SOL9511-148-17
		14.8	17	L	SOL9511-148-17
		14.5	19	R	SOL9511-145-19
		14.5	19	L	SOL9511-145-19
		14.3	21	R	SOL9511-143-21
		14.3	21	L	SOL9511-143-21

RUBEX



Núcleo intercambiable (no incluido).
Interchangeable hub (not included).
Mozzo intercambiabile (non incluso).
Moyaux interchangeable (non inclus)

	B	D	P	R	INOX STAINLESS STEEL
C 30-75 HP	3	$11^{5/8}$	11	R	SOL9331-116-11
		$11^{3/8}$	12	R	SOL9331-114-12
		$11^{1/8}$	13	R	SOL9331-111-13
		$11^{1/8}$	14	R	SOL9331-111-14
		11	15	R	SOL9331-110-15
D 40-140 HP	3	$13^{3/4}$	13	R	SOL9431-138-13
		$13^{3/4}$	13	L	SOL9432-138-13
		$13^{1/2}$	15	R	SOL9431-135-15
		$13^{1/2}$	15	L	SOL9432-135-15
		$13^{1/4}$	17	R	SOL9431-133-17
		$13^{1/4}$	17	L	SOL9432-133-17
		13	19	R	SOL9431-130-19
		13	19	L	SOL9432-130-19
		13	21	R	SOL9431-130-21
E 90-140 HP	3	$14^{1/2}$	15	R	SOL9531-145-15
		$14^{1/2}$	15	L	SOL9532-145-15
		$14^{1/4}$	17	R	SOL9531-143-17
		$14^{1/4}$	17	L	SOL9532-143-17
		14	19	R	SOL9531-140-19
		14	19	L	SOL9532-140-19
		14	21	R	SOL9531-140-21
		14	21	L	SOL9532-140-21
		14	23	R	SOL9531-140-23
		14	23	L	SOL9532-140-23
E 135-350 HP	3	$15^{3/4}$	15	R	SOL9571-158-15
		$15^{3/4}$	15	L	SOL9572-158-15
		$15^{1/2}$	17	R	SOL9571-155-17
		$15^{1/2}$	17	L	SOL9572-155-17
		$15^{1/4}$	19	R	SOL9571-153-19
		$15^{1/4}$	19	L	SOL9572-153-19
		15	21	R	SOL9571-150-21
		15	21	L	SOL9572-150-21
		$14^{3/4}$	23	R	SOL9571-148-23
		$14^{3/4}$	23	L	SOL9572-148-23
		$14^{1/2}$	25	R	SOL9571-145-25
		$14^{1/2}$	25	L	SOL9572-145-25



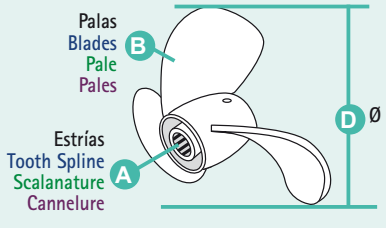

P Paso
Pitch
Passo
Pas

R Rotación L (izquierda) R (derecha)
Rotation L (left) R (Right)
Rotazione L (SX) R (DX)
Rotation L (gauche) R (droit)

NÚCLEO INTERCAMBIABLE INTERCHANGEABLE HUB MOZZO INTERCAMBIABILE MOYEU INTERCHANGEABLE

	2T STROKES	4T STROKES	A	REF	
F30 (2001-05) F40 (1999+); F50 (1995+) F60 (1999+)		✓	13	SOLRBX-117	C
40HP & 50HP (not T50), (1984+) 48HP (1995+) 55HP (1976-95) 60HP (1976-91)			13	SOLRBX-117	C
T50 (1996+)			15	SOLRBX-108	D
60-100 HP (1984+)	✓	✓	15	SOLRBX-108	D
80-140HP, (1978-83)			15	SOLRBX-102	D
115HP FS115		✓	15	SOLRBX-103	D
130HP, (1984+)			15	SOLRBX-103	D
150-175HP, (1978-83)			15	SOLRBX-102	E
150-300HP, (1984+)			15	SOLRBX-103	E
225 EFI		✓	15	SOLRBX-103	E
F300, F350			17	SOLRBX-127	E+
300, 350HP, V8		✓	17	SOLRBX-127	E+
Sterndrives, (1989-93)			15	SOLRBX-103	E



GUÍA DE RECAMBIOS DE HÉLICE PROPELLER SPARE PARTS GUIDA RICAMBIO ELICHE GUIDE DES PIECES POUR HELICE

	1	2	3	4	5
F2.5A, F4B, F5A, F6C	PAF4-03000025		PAF4-03000026	PAF4-03080000	PAGB/T91-1.6X12
F8C, F8F			REC90201-10M01	REC90171-10M01	REC91490-30025
F9.9J			REC90201-10M01	REC90171-10M01	REC91490-30025
F15C, F20B	REC6E7-45987-00		REC90201-10M01	REC90171-10M01	REC91490-30025
F25D	REC6L2-45987-00	REC689-45997-00	PAGB/T97.1-14	REC90171-14013-00	REC91490-30030
FT25F	REC663-45987-00		REC92990-16200	REC90171-16011	REC91490-30030
F30, F40F, F50H, F60F	REC663-45987-00	REC66T-45997-00	REC90389-22M01	REC90171-16011	REC91490-30030
FT50J, FT60G	REC688-45987-00	REC67F-45997-00	REC90389-25M00	REC90171-16011	REC91490-30030
F70A, F80B, F100D	REC688-45987-00	REC67F-45997-00	REC90389-25M00	REC90171-16011	REC91490-30030
F(L) 115A, F(L) 115B, F130A, F(L)150A, F(L)150D, F175A, F(L)200F	REC6E5-45987-00	REC688-45997-00	REC92990-18200	REC90171-18M04	REC91490-40030
F(L)225F, F(L)250D, F(L)300B (4.2L) V6		REC688-45997-00	REC92990-18200	REC90171-18M04	REC91490-40030

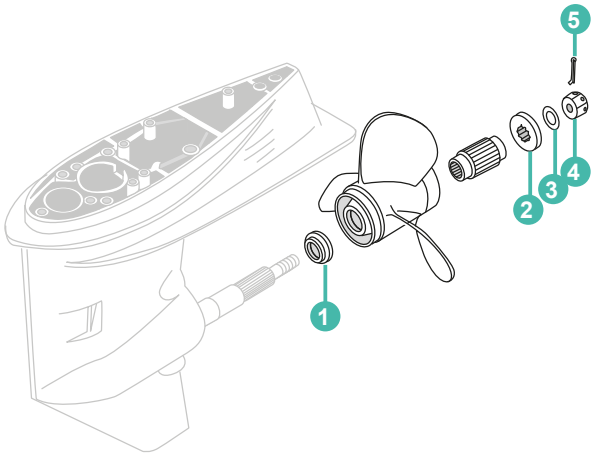

REF --> RO / OEM

REF	R.O. / OEM	
C		
CEF500302	6G1-44352-00	143
CEF500316	6H3-44352-00	143
CEF500320	682-44352-03	143
CEF500321	662-44352-01	143
CEF500322	6L5-44352-00	143
CEF500323	688-44352-03	143
CEF500324	646-44352-01	143
CEF500325	6E0-44352-00	143
CEF500326	689-44352-02	143
CEF500352	6F5-44352-00	143
CEF500363	63V-44352-01	143
CEF500364	67F-44352-00	143
CEF500368	68T-44352-00	143
CEF500371	6E5-44352-01	143
CEF500384	6L2-44352-00	143
CEF500385G	6H4-44352-02	143
CEF500389N	6AW-44352-00	143-155
CEF500401N	6CE-44352-00	143
CHAL77JC4		108
CHAL82C		108
CHAL90C		108
CHAQL77JC4		108
CHAQL78C		108
CHAQL82C		108
CHAQL86C		108
CHARA8HC		108
CHARC12YC		108
CHARC9YC4		108
CHAZ9Y		108
CM15008	66M-11325-00	159
CM15008A	66M-11325-00	159
CM15026	6E5-11325-00	158-169
CM15026A	6E5-11325-00	65-70-72-73-158-169-187-209-213
CM3082523	689-11325-00	158
CM41106-ZW000	41106-ZW-000	158
CM42121		159
CM43107M	677-45251-00	169
CM61A-11325-00	61A-11325-00	161
CM61A-45371	61A-45371-00	160-169-383
CM61A-45371-00A	61A-45371-00	160-169-331-335-337
CM61N-45251-01	61N-45251-01	160-169-291-351-355
CM61N-45251-01A	61N-45251-01	65-66-160-169
CM62Y-11325-00	62Y-11325-00	158
CM62Y-11325-00A	62Y-11325-00	65-66-67-68-69-158-197-203-205-207
CM63D-45251-01	63D-45251-01	159-169
CM63D-45251-01A		169
CM63P-11325-01	63P-11325-00	161
CM63P-11325-01	63P-11325-01	161
CM63P-11325-01		169
CM63P-11325-01A	63P-11325-00	161
CM63P-11325-01A	63P-11325-01	161-211-214
CM63P-11325-01A		70-71-73
CM63P-11325-11	63P-11325-11	161-169
CM63P-11325-11A	63P-11325-11	71-73-161-211
CM664-45371-01	664-45371-01	169-357-359-361
CM664-45371-01	664-45371-01-00	353
CM664-45371-01	664-45371-01A	160
CM664-45371-01A	664-45371-01A	66-160-169
CM66M-11325-00A		65
CM66M-45371-00	66M-45371-00	159-169-291
CM679-45251-00	679-45251-00	160
CM679-45251-00A	679-45251-00	160
CM67C-45251-00	67C-45251-00	158-169-361
CM67C-45251-00A	67C-45251-00	66-67-69-158-299-303-307-311
CM67C-45371-00	67C-45371-00	160-169
CM67C-45371-00A	67C-45371-00	66-67-68-69-160-169-299-303-307-311
CM67F-11325-00	67F-11325-00	159
CM67F-11325-01	67F-11325-01	161
CM67F-11325-01A	67F-11325-01	70-71-72-73-161-211-213
CM67F-45371-00	67F-45371-00	70-161
CM67F-45371-00A	67F-45371-00	68-69 -161-315-319
CM688-45251-01	688-45251-01	158-169
CM688-45251-01A	688-45251-01	67-68-69-158-169
CM688-45371-02	688-45371-02	371
CM688-45371-02	688-45371-02	160-169
CM688-45371-02	688-45371-02-00	373
CM688-45371-02A		160-169
CM689-11325-00A	689-11325-00	158
CM68T-11325-00	68T-11325-00	161
CM68T-11325-00A	68T-11325-00	71-72-73-161-211
CM68T-45251-00	68T-45251-00	158-169
CM68T-45251-00A	68T-45251-00	64-65-158-169-289
CM68V-11325-01	68V-11325-01	158
CM68V-11325-01A	68V-11325-01	158
CM68V-11325-01A	68V-11325-02	209
CM68V-11325-01A		69
CM69L-45371-00	69L-45371-00	160-169
CM69L-45371-00A	69L-45371-00	160-169
CM6AW-45251-00	6AW-45251-00	161-169
CM6AW-45251-00A	6AW-45251-00	72-161-169
CM6AW-45373-00	6AW-45373-00	161-169
CM6AW-45373-00A	6AW-45373-00	161-169 -341
CM6AW-45619-00	6AW-45619-00	161
CM6AW-45619-00A	6AW-45619-00	161-341
CM6BL-11325-00	6BL-11325-00	161
CM6BL-11325-00A	6BL-11325-00	66-161-195
CM6E0-45251-11	677-45251-00	347
CM6E0-45251-11	6E0-45251-11-00	158
CM6E0-45251-11	6E0-45251-11	169
CM6E0-45251-11A	6E0-45251-11-00	65-66-67-68-69-158 -169
CM6E5-45251-00	6E5-45251-00	158-169
CM6E5-45251-00A		66-158-169
CM6E5-45371-01A	6E5-45371-00	323
CM6E5-45371-01A	6E5-45371-01	161-379
CM6E5-45371-01A		70-71-169
CM6E5-45371-10	6E5-45371-10	160
CM6E8-45251-00	6E8-45251-00	159
CM6E8-45251-01	6E8-45251-02	159-169
CM6G1-45251-02	6G1-45251-02	159-169
CM6G1-45251-03	6G1-45251-03	159
CM6G1-45251-03	6GH-45251-00	159
CM6G1-45251-03	6N0-WG525-00	159
CM6G1-45251-03	6G1-45251-03	169
CM6G5-45251-01	6G5-45251-01	158-169
CM6G5-45251-01A	6G5-45251-01	70-158-169
CM6G8-11325-00	6G8-11325-00	159-169-181
CM6G8-11325-00A	6G8-11325-00	65-159-180-187-195-201-203-205
CM6G8-45251-01	6G8-45251-00	159-169
CM6H1-45251-01	6H1-45251-01	158-169
CM6H1-45251-01A	6H1-45251-01	158
CM6H1-45251-02	6H14525102	158-169
CM6H1-45251-02A	6H14525102	69-70-71- 158-169
CM6H3-11325-01A	6H3-11325-01	241
CM6J9-45371-01	6J9-45371-01	160-169
CM6J9-45371-01A	6J9-45371-01	72-160-169-327
CM6K1-45371-00	6K1-45371-00	161-169
CM6K1-45371-00A	6K1-45371-00	161-169
CM6K1-45371-02	6J9-45371-02	160-169
CM6K1-45371-02A	6J9-45371-02	72-160-169
CM6L5-45251-02	6L5-45251-02	159-169-343
CM6L5-45251-02	6L5-45251-03	345
CM6L5-45251-02A	68D-G5251-00	287
CM6L5-45251-02A	6L5-45251-02	159
CM6L5-45251-02A		64-169
CM6T4-45836-00	6T4-45836-00	159
CM6T5-45371-00	6T5-45371-00	161
CM6T5-45373-00	6T545373-00	159
CM6U0-45251-00	6U0-45251-00	159-169
CM6U4-45251-00	6U4-45251-00	158-169
CM825171		158
CM82795M		160
CM82795MA		160
CM85007	688-11325-00	160
CM85007A	688-11325-00	160
CMY150CRKITA		71-162
CMY150CRKITM		162
CMY150KITA		71-162
CMY150KITM		162
CMY200250KITA		72-73-162
CMY200250KITM		162
CMY200300KITM		162
CMY300350KITA		73-162
CMY300350KITM		162
CMY300350XPKITA		73-162
CMY300350XPKITM		162
CMY4050KITA		162
CMY4050KITM		162
CMY4060KITA		162
CMY4060KITM		162
CMY6090KITA		162
CMY6090KITM		162
CMY80100KITA		162
CMY80100KITM		162
CMYHP200300KITA		162
G		
GS11290		121
GS11291		121
GS11292		121
GS11294		121
GS30435		80
GS31001		80
GS31002		80
GS31020		77
GS31064		77
GS31065	YMM-2FE10-00	79
GS31066	YMM-2FS08-00	79
GS31067	YMM-2FS10-00	79
GS31068		76
GS31069		76
GS31073		77
GS31074	6Y1-24305-05-00	76
GS31074	6Y1-24305-06	76
GS31074	6Y1-24305-06-00	76
GS31074	6YL-24305-01-00	76
GS31075	6G1-24305-00	76
GS31075	6G1-24305-01	76
GS31075	6G1-24305-02	76
GS31075	6G1-24305-02-00	76
GS31075	6G1-24305-03	76
GS31075	6G1-24305-03-00	76
GS31075	6G1-24305-04	76
GS31075	6G1-24305-04-00	76
GS31075	6G1-24305-05	76
GS31075	6G1-24305-05-00	76
GS31075	6G1-24305-0500	76
GS31075	6Y1-24305-00	76
GS31075	6Y1-24305-01	76
GS31075	6Y1-24305-02	76
GS31075	6Y1-24305-05-00	76
GS31075	6Y1-24305-06-00	76
GS31075	6YL-24305-01-00	76
GS31076	6E5-24305-05-00	76
GS31076	6E5-24305-06	76
GS31076	6E5-24305-06-00	76
GS31076	6Y2-24305-05-00	76
GS31076	6Y2-24305-06-00	76
GS31076	6YK-24305-01-00	76
GS31090	6Y2-24360-52	74
GS31092		77
GS31095		74
GS31096		74
GS31097		74
GS31099		74
GS31155		79
GS31156		79
GS31157		79
GS31166	YMM-2FE08-00	79
GS31183	6Y1-24360-52-00	74
GS31183	6Y1-24360-52-01	74
GS31183	6Y1-24360-52-02	74
GS31183	6Y1-24360-52-51	74
GS31183	6Y1-24360-52-52	74
GS31187	6Y1-24360-52	74
GS35031	90890-56878	75
GS35032	90790-77001	75
GS40015	YMD-RCBOX-00-10	127
GS41084	6E5-61301-00	131
GS41084	6E5-61301-01	131
N		
NGKB7HS	94702-00040	220-235-239
NGKB7HS-10	94702-00217	225-229
NGKB7HS-10	94702-00271	227
NGKB8HS	94702-00041	239
NGKB8HS-10	90472-00247	243
NGKB8HS-10	94702-00160	239
NGKBKR6EKU	94702-00405-00	108
NGKBKR7EKU	94702-00404-00	108
NGKBPR7HS	94702-00248	175
NGKBR5HS	94702-00249-00	108
NGKBR6FS	94701-00365-00	108
NGKBR6HS	94701-00248-00	108
NGKBR6HS	94702-00248	64-173
NGKBR6HS-10	94702-00274	64-65-180-223
NGKBR6HS-10	94702-00274-00	108
NGKBR7HS	94701-00110	108
NGKBR7HS	94701-00110-00	108
NGKBR7HS	94702-00272	221-233
NGKBR7HS-10	94702-00271	223-229-231-237
NGKBR7HS-10	94702-00271-00	108
NGKBR8ES	94701-00204	108
NGKBR8ES-11	94702-00396	108
NGKBR8HS	94701-00195	108
NGKBR8HS	94701-00195-00	108
NGKBR8HS-10	94702-00247	237-241-245
NGKBR8HS-10	94702-00247-00	108
NGKBR8HS-10	94702-00271	247
NGKBR9HS-10	94701-00309-00	108
NGKBR9HS-10	94702-00309	245
NGKCR5HSB	94701-00300-00	108
NGKCR6HS	94701-00282	181
NGKCR6HS	94701-00282-00	108
NGKCR6HS	94702-00372-00	108
NGKCR6HSB	94702-00372	64-173-179
NGKCR9EB	94702-00409	108
NGKDPR5EA-9	94701-00406-00	69-108
NGKDPR6EA-9	94701-00375	65-66-67-68-197-207
NGKDPR6EA-9	94701-00375-00	108
NGKDPR6EB-9	94702-00418	65-66-67-68-69-187-195-201-203
NGKDPR6EB-9	94702-00418-00	108
NGKDPR7EA-9	94701-00375	185-191
NGKLFR5A-11	94702-00391	69-70-71-72-209-211
NGKLFR5A-11	94702-00391-00	108
NGKLFR6A-11	94702-00400	70-72-73-213-214
NGKLFR6A-11	94702-00400-00	108
NGKLKR6E	94702-00437-00	71-108
NGKLKR6E-9N	94702-00440	70
NGKLKR7E	94702-00429	69-205
NGKLKR7E	94702-00429-00	108
P		
PA60-04000004	63D-44144-00	305-309-313
PA166F-000001	JA9-12153-00	173-175-179
PA166F-010001	67D-12111-00	173-180
PA166F-010002	67D-12121-00	173
PA166F-010003	51Y-12119-00	173-180-189-195-201

REF	R.O. / OEM	
PA166F-010008	67D-12157-00	173-175-179
PA166F-010009	67D-12151-00	173-175-179
PA166F-010010	7FK-12165-00	173-175-179
PA166F-010011	7FK-12158-00	173-175-179
PAE4-10040100W	703-82563-00	122-128
PAE4-10040100W	703-82563-01	122-128
PAE4-10040100W	703-82563-02	128
PAF15-00000001	63V-45551-00-4D	132
PAF15-00000001	66M-44551-00-4D	132
PAF15-00000002	682-44555-30	135
PAF15-00000003	66M-44557-00	135
PAF15-00000005	66M-45113-00	271
PAF15-00000013	93604-10M03	201-317-351
PAF15-00000013	93604-12M07	171-173-283-289-291-293-351
PAF15-00000014	66M-11351-10	183-217-218-233
PAF15-01000001	65F-42537-00	133
PAF15-01000004	90386-30048	133
PAF15-01000006	90386-30M60	134
PAF15-01010001	63V-43131-00	132
PAF15-01010001	63V-43131-01	132
PAF15-01010001	63V-43131-10	132
PAF15-01010007	63V-43145-00	132
PAF15-01010007	90185-22043	132
PAF15-01010007	90185-22M11	132
PAF15-01010100	63V-43111-00-4D	131
PAF15-01010100	63V-43111-01-4D	131
PAF15-01010100	63V-43111-A2-4D	131
PAF15-01010200	63V-43112-00-4D	131
PAF15-01010200	63V-43112-01-4D	131
PAF15-01010200	63V-W4311-00-4D	131
PAF15-01010200	63V-W4311-03-4D	131
PAF15-01010200	63V-WS431-B6-8D	131
PAF15-01010301S	63V-43311-00-4D	131
PAF15-01010301S	63V-43311-01-4D	131
PAF15-01010301S	99999-03116	131
PAF15-01010302	90386-22M15	133
PAF15-01030100	65W-42138-00	131
PAF15-02000005L	66M-44361-10	291
PAF15-02000005S	66M-44361-00	291
PAF15-02000006	63V-44365-10	289-291-351
PAF15-02010000	66M-44514-00-4D	135
PAF15-03000003	66M-45115-00	268
PAF15-04000002	90340-14M00	237-241
PAF15-04000002	90340-14M06	191-195-197-201-203-205-207-209-211-213
PAF15-04000003	90430-14115	195-197-201-207-209-211-213-235-237-239-241
PAF15-04000003	90430-14M09	65-66-67-68-69-70-71-72-73-191
PAF15-04000005	676-11372-00	173-179-181-183-195-213-225-227-229-231-233
PAF15-04000005	6H1-11372-00	187
PAF15-04010004	66M-41138-00	268
PAF15-05000009	6BL-44391-00	139
PAF15-05000009	6H3-44391-00	139
PAF15-05000009	6H3-44391-01	139
PAF15-05000011	688-24378-00	183-191-195-197-207
PAF15-05000012	90445-09061	183
PAF15-05000013	90445-09086	183
PAF15-05000014	90445-09104	183-197-207
PAF15-05170300W	6G1-81941-10	111-114
PAF15-06000001	63V-45311-01-4D	351
PAF15-06000002	63V-45215-00	293-350
PAF15-06000002	6G1-45215-00	289
PAF15-06000003	6G1-45214-00	289-293-350
PAF15-06000004	61N-45251-00	295
PAF15-06000006	63V-45536-00	291-292-351
PAF15-06000008	6E8-45587-10	293
PAF15-06000008	6E8-45587-10-13	291-351
PAF15-06000009	6E7-45587-01-30	348
PAF15-06000009	6E8-45587-30	293
PAF15-06000010-1	664-45567-01-10	291-351
PAF15-06000010-1	664-45567-05	349
PAF15-06000010-1	664-45567-01	293
PAF15-06000010-2	664-45567-10	293
PAF15-06000010-2	664-45567-12	349
PAF15-06000010-3	664-45567-20	293
PAF15-06000010-4	664-45567-30	293
PAF15-06000010-5	664-45567-30	349
PAF15-06000010-5	664-45567-40	293
PAF15-06000010-6	664-45567-50	293
PAF15-06000010-7	664-4556-50	349
PAF15-06000010-7	664-45567-60	293
PAF15-06000014	63V-44328-00	289-291-351
PAF15-06000014	63V-44328-01	293
PAF15-06000015	6E7-45987-01	351
PAF15-06000016	90171-10M01	349
PAF15-06000020-1	90201-15017	293
PAF15-06020005	63V-45375-00	289-291-292-351
PAF15-06030000L	63V-44150-10	291-351
PAF15-06030000S	63V-44150-00	291-351
PAF15-06040000S	63V-45510-00	291
PAF15-06070002	90501-14M06	291-349-351
PAF15-06070002	90501-150A0	293
PAF15-06080000	683-45361-02-8D	293

REF	R.O. / OEM	
PAF15-06080003	93210-56M80	231-291-293-351
PAF15-06080006-1	626-45577-00	293-351
PAF15-06080006-1	626-45577-00-01	291-349
PAF15-06080006-2	626-45577-10	293
PAF15-06080006-3	626-45577-00-03	349
PAF15-06080006-3	626-45577-20	293
PAF15-06080006-4	626-45577-30	293
PAF15-06080006-5	626-45577-00-05	349
PAF15-06080006-5	626-45577-40	293
PAF15-06090000	63V-45943-10-00	402
PAF15-06100000L	66M-45300-11-4D	277-291
PAF15-06100000S	66M-45300-02-4D	277-291
PAF15-07000000	66M-W009B-15-1S	185
PAF15-07000001	99510-10114	180-183-185
PAF15-07000001	91810-03014	181
PAF15-07000013	93604-12M07	183
PAF15-07000016	661-41262-01	100
PAF15-07000016	661-41262-02	100
PAF15-07000024	66M-46297-00	185
PAF15-07000028	90105-08M78	180-185
PAF15-07000030	97013-06035	197
PAF15-07000031	66M-12411-00	137
PAF15-07000031	66M-12411-01	137-179-180-183
PAF15-07000031	6G8-12411-02	191
PAF15-07000031	6G8-12411-03	66-67-68-69-137-195-197-201-203-205-207
PAF15-07000100	66M-11181-10	185-215-218
PAF15-07000200	66M-85580-00	107
PAF15-07000300	66M-85520-00	106
PAF15-07000400	66M-85533-00	104
PAF15-07000500	66M-85540-10	118
PAF15-07000600	66M-85570-00	104
PAF15-07010000	66M-15100-02-1S	183
PAF15-07010003	6C5-12858-00	187
PAF15-07010003	90401-20M00	183-191-197
PAF15-07010004	90344-51003	203-205
PAF15-07010006	6E5-24377-00	181-183
PAF15-07010007	90445-10M46	183
PAF15-07010008	66M-11325-00	183
PAF15-07010009	66M-11328-00	65-66-67-68-69-183-191-197-203-205-207
PAF15-07010011	66M-11327-00-94	168-183-191-197-203-205-207
PAF15-07010012	66M-12535-00	183-191-197-203-205-207
PAF15-07010014	66M-11357-00	183
PAF15-07010015	90465-08M83	195
PAF15-07010018	66M-41114-01	65-140-183
PAF15-07010019	66M-41113-20-1S	183
PAF15-07010021	6H3-12413-00-1S	197-207-241
PAF15-07010021	6H3-12413-00-9M	191
PAF15-07010021	6H3-12413-001S	183
PAF15-07010022	62Y-12414-00	66-67-68-69-138-183-191-195-197-201
PAF15-07010023	5GH-13440-00	183
PAF15-07010024	66M-11416-00	183
PAF15-07010026	6E5-11325-00	183
PAF15-07010027	90480-12072	185-209-211
PAF15-07010103	62Y-82504-10	103
PAF15-07010103	65W-82504-00	103
PAF15-07010200	66M-11168-001S	183
PAF15-07020001	66M-11631-00-96	183-219
PAF15-07020005	93450-15023	183-219
PAF15-07020006	634-11633-00	183-219
PAF15-07020100	66M-11650-00	183
PAF15-07030000	66M-11411-00	183-219
PAF15-07030003	66M-11536-10	185
PAF15-07030004	66M-11557-00	185
PAF15-07030005	90170-28M37	185
PAF15-07030006	93102-25014	189
PAF15-07030006	93102-35M51	183
PAF15-07030007	93102-25M52	183
PAF15-07040000	66M-11111-01-1S	185
PAF15-07040001	66M-12111-00	185
PAF15-07040002	66M-12121-00	185
PAF15-07040004	66M-12116-00	185
PAF15-07040005	66M-12113-00	185
PAF15-07040006	30X-12117-00	189-193-195-199-201-203-207
PAF15-07040007	30X-12118-00	185-189-193-195-199-201-203-207
PAF15-07040008	93102-18M21	180-185
PAF15-07040009	90387-13001	185
PAF15-07040011	90387-13002	185
PAF15-07040012	90387-13M56	180-185
PAF15-07040013	90501-12M41	185
PAF15-07040014	90501-12M40	180-185
PAF15-07040015	66M-12146-00	185-189
PAF15-07040016	66M-13329-10	185
PAF15-07040017	90201-13201	180-185
PAF15-07040018	66M-11537-00-94	185
PAF15-07040200	66M-12170-00	185
PAF15-07040301	66M-12151-10	185
PAF15-07040303	62Y-12159-00	185-193-199
PAF15-07040303	64J-12159-00	189
PAF15-07040304	62Y-12158-00	185-189-193-195-199-201-203-205-207

REF	R.O. / OEM	
PAF15-07040500	66M-13300-10	185
PAF15-07050001	66M-11191-00-1S	185
PAF15-07050002	66M-11356-00	185
PAF15-07050003	90480-10M16	185
PAF15-07050004	69M-E5363-00	171-180
PAF15-07050004	6G8-15363-00	181-185-187-191-195-197-201-203-205-207-209-211-213-214
PAF15-07050006	30X-12117-00	185
PAF15-07060001	6J8-81960-00	117
PAF15-07070000	66M-85550-00	109
PAF15-07070100W	66M-85550-10	109
PAF15-07080000	61N-24560-00	80
PAF15-07080002	61N-24521-00	80
PAF15-07090000	66M-14301-00	91
PAF15-07090000W	66M-14301-00	91
PAF15-07130001	63V-15716-00	113
PAF15-07130107	63V-15713-00	112
PAF15-07130201	63V-15714-00	113
PAF15-07130202	63V-15741-00	112
PAF15-07130203	63V-15767-00	112
PAF15-07130204	63V-15784-00	112
PAF15-07140000	66M-24410-11	85
PAF15-09000000	6G1-24306-55	74
PAF15-09000000	6Y1-24306-55-00	74
PAF15-10000002	6YJ-24167-00	76
PAF15-10000003	6Y1-24268-00	76
PAF15-10010000	6YJ-24610-00	75
PAF15-10010000	6YJ-24610-01	75
PAF15-10020000	6YJ-24260-00	76
PAF15-10020000	6YJ-24260-10	76
PAF15-10030001	66M-12138-60	185
PAF15-11000002W	703-48293-10	129
PAF15-11020000W	63V-61350-00	131
PAF15-13000000W	703-48230-10	126
PAF15-13000100W	688-82586-21	129
PAF15-13000200W	703-82510-12	113
PAF15-13000300W	703-83383-00/01/02	128
PAF15-13000300W	703-83383-10/11	128
PAF15-13000500W	703-48261-01	127
PAF15-13010010W	703-48245-00	129
PAF15-13020007W	703-48152-00	129
PAF166-010003	51Y-12119-00	179-193
PAF2.6-00000003	69M-45113-A0	173-217-218
PAF2.6-00000004	69M-24575-00	76
PAF2.6-02000003L	69M-44361-10	283
PAF2.6-02000003S	69M-44361-00	283
PAF2.6-03000001	69M-G5311-00-4D	283
PAF2.6-03000002	6L5-45317-09	283
PAF2.6-03000003	6L5-45316-09	283
PAF2.6-03000004	93103-09M41	283
PAF2.6-03000007	69M-G5315-A0	283
PAF2.6-03000008	69M-G5321-00-94	283
PAF2.6-03000009	93210-05001	283
PAF2.6-03000010	69M-G4323-00	148-154-283
PAF2.6-03000011L	69M-G5511-10	283
PAF2.6-03000011S	69M-G5511-00	283
PAF2.6-03000012	93440-08819	283
PAF2.6-03000013	93604-07M13	283
PAF2.6-03000013	93604-09068	343
PAF2.6-03000013	93604-07M13	64-154
PAF2.6-03000014	69M-G4311-00	147-154-283
PAF2.6-03000015	6L5-44322-00	154-283
PAF2.6-03000016	69M-G4328-00	283
PAF2.6-03000017	646-45534-00-03	343
PAF2.6-03000017	6L5-45533-00-20	283
PAF2.6-03000018	6L5-45551-00	283
PAF2.6-03000019	6L5-45560-00	283
PAF2.6-03000020	69M-G5635-00	283
PAF2.6-03000201	6L5-45631-00	283
PAF2.6-03000021	90201-13198	283
PAF2.6-03000100	6L5-44352-00	64-283
PAF2.6-03000202	6L5-45631-00	283
PAF2.6-03000300	69M-G5361-00-4D	283
PAF2.6-03000301	69M-G5361-00-4D	283
PAF2.6-03000302		283
PAF2.6-03010000	6E0-45949-00	287
PAF2.6-03010000	6L5-45943-00-EL	283
PAF2.6-03010000	6L5-45949-00-EL	402
PAF2.6-03020000L	69M-65300-11-4D	277
PAF2.6-03020000L	69M-G5300-01-4D	283
PAF2.6-03020000S	69M-65300-01-4D	277
PAF2.6-03020000S	69M-G5300-00-4D	283
PAF2.6-04000001	69M-11181-00	173-215-218
PAF2.6-04000002	69M-12154-00	173
PAF2.6-04000003	90201-23008	173
PAF2.6-04000004	69M-11351-A0	171-270
PAF2.6-04000005	69M-11193-A0	173
PAF2.6-04000006	69M-E1191-00-1S	173
PAF2.6-04000007	90445-09808	173
PAF2.6-04000008	69M-G2743-00	171
PAF2.6-04000009	6G8-44532-00	171
PAF2.6-04000015	90445-07MA3	237
PAF2.6-04000100	69M-12170-01	173
PAF2.6-04000200	69M-14301-21	91
PAF2.6-04000501	69M-E2413-00-1S	173
PAF2.6-04000600	69M-85640-00	106
PAF2.6-04010001	93102-20070	220
PAF2.6-04010001	93102-20108	171-177-179
PAF2.6-04010100	69M-E1311-00-1	171
PAF2.6-04010102	69M-15361-00	171
PAF2.6-04020001	69M-E1631-01-96	173-219
PAF2.6-04020005	69M-E1633-00	173-219

REF	R.O. / OEM	
PAF2.6-04020006	93450-13130	173
PAF2.6-04020100	69M-11650-00	173
PAF2.6-04030000	69M-11400-00	173-219
PAF2.6-04040001	69M-E2155-00	173
PAF2.6-04040100	69M-E1111-00-1S	173
PAF2.6-04050001	69M-E5111-00-1S	171
PAF2.6-04050100	69M-E3102-00	171
PAF2.6-04060000	69M-E5396-00-5B	171
PAF2.6-04060001	69M-E5396-00	171
PAF2.6-04060002	93210-09004	171
PAF20-02000005	6AH-44368-00	293
PAF20-02000007	6AH-44365-00	293
PAF20-02000101L	6AH-44361-11	293
PAF20-02000101S	6AH-44361-01	293
PAF20-04000000L	6AH-45300-10-4D	277
PAF20-04000000L	6AH-45300-10-8D	277-292
PAF20-04000000S	6AH-45300-00-4D	277
PAF20-04000000S	6AH-45300-00-8D	277-292
PAF20-04000001	69G-45315-A0	292
PAF20-04010001	69G-45331-01-CA	292
PAF20-04020000L	6AH-44150-10	292
PAF20-04020000S	6AH-44150-00	292
PAF20-04030000L	6AH-45510-10	293
PAF20-04030000S	6AH-45510-00	293
PAF20-04040001	6AH-44311-00	147-293
PAF20-05000000	6AH-W009B-02-1S	189
PAF20-05000002	90105-090006	187
PAF20-05000003	6AH-46241-00	189-267
PAF20-05000016	6AH-12481-00	187
PAF20-05000027	6AH-11536-00	189
PAF20-05000028	6AH-11557-00	189
PAF20-05000029	90170-30003	189
PAF20-05000034	90480-10627	189
PAF20-05000036	90480-06M19	189
PAF20-05000100	6AH-85580-00	107
PAF20-05000200	6AH-85510-00	121
PAF20-05000300	6AH-85540-00	118
PAF20-05000500	6AH-85550-00	109
PAF20-05000500W	6AH-85550-10	109
PAF20-05000600	6AH-41113-01-1S	187
PAF20-05000602	6AH-41114-00	187
PAF20-05000700	6AH-12413-00-1S	187
PAF20-05000702	6AH-12414-00	65-187
PAF20-05000900W	6AH-81800-00	111
PAF20-05000900W	6AH-81800-01	111
PAF20-05010000	6AH-15100-00	187
PAF20-05010003	6AH-11416-00	189
PAF20-05010007	97013-06040	187
PAF20-05020001	6AH-11631-00	189-219
PAF20-05020002	93450-17129	189-219
PAF20-05020003	137-11633-10	189-219
PAF20-05020004	6AH-11411-00	189-219
PAF20-05020100	6AH-11603-00	189-219
PAF20-05020200	6AH-11650-10	189
PAF20-05030001	6AH-12111-00	189
PAF20-05030002	6AH-12121-10	189
PAF20-05030003	62Y-12116-00	189
PAF20-05030004	3YF-12113-00	189
PAF20-05030005	93102-22010	189
PAF20-05030006	90387-13006	189
PAF20-05030007	90501-120A5	189
PAF20-05030008	6AH-12279-00	189
PAF20-05030009	6G8-11197-01	203-205
PAF20-05030009	6G8-11197-A0	187
PAF20-05030010	6AH-13329-10	189
PAF20-05030011	90201-15423	189
PAF20-05030012	6AH-11537-00	189
PAF20-05030013	90201-08784	189
PAF20-05030100	6AH-11111-10-1S	187
PAF20-05030200	6AH-12170-00	189
PAF20-05030301	6AH-12151-00	189
PAF20-05030400	6AH-13300-00	189
PAF20-05040000	6AH-11191-001S	187
PAF20-05040002	6AH-11356-00	187
PAF20-05040003	6AH-11168-00	187
PAF20-05040004	6AH-11169-00	187
PAF20-05040005	62Y-14485-00	195
PAF20-05040005	6AH-11372-00	187
PAF20-05050000	6AH-24410-00	85
PAF20-05000702	6AH-12414-00	138
PAF20-07000100W	63AH-61350-00	131
PAF25-00000011	90105-10M12	295
PAF25-00000013	65W-11351-00	191
PAF25-00000013	65W-11351-10	218217-
PAF25-00000014	93608-12063	235-239-241-243
PAF25-00000014	99530-08012	191-197-201-203-205-207
PAF25-01000001	90386-52M02	133
PAF25-01000004	90386-44M03	133
PAF25-01010002	90386-22M15	133
PAF25-02000004L	65W-44361-10	297
PAF25-02000004S	65W-44361-00	297
PAF25-02000005	90430-12072	297
PAF25-02000019	90202-12060	297-301-305-309-367-371
PAF25-02010005	62Y-11325-00	191
PAF25-02010007	67C-15312-00	271
PAF25-03000007	90387-06M69	133
PAF25-03000008	90445-09068	191-197-207
PAF25-03000009	90445-09095	191-197-207
PAF25-03000009	90445-09104	195
PAF25-03000011	90445-09105	191
PAF25-03000011	90445-09251	195
PAF25-04000001	61N-45311-02-4D	295

REF	R.O. / OEM	
PAF25-04000002	61N-45536-00	297-355
PAF25-04000003-2	61N-45587-00-10	297
PAF25-04000003-3	61N-45587-00-11	297
PAF25-04000003-4	61N-45587-00-12	297
PAF25-04000003-5	61N-45587-00-13	297
PAF25-04000003-6	61N-45587-00-14	297
PAF25-04000003-7	61N-45587-00-15	297
PAF25-04000004-3	6L2-45567-12	295
PAF25-04000004-5	6L2-45567-14	295
PAF25-04000005	61N-45551-00	295
PAF25-04000007	93604-08062	214-223-239-301-305-309-313-349-357-363-367
PAF25-04000007	93604-10M03	195-203-205-297-321-355-371
PAF25-04000008	65W-45331-00-5B	297
PAF25-04000009	61N-45315-00	297-355
PAF25-04000012	65W-44176-00	297
PAF25-04000013	61N-45127-00	297-355
PAF25-04000015	90280-03024	155-297
PAF25-04000016	65W-44328-00	297
PAF25-04000017	61N-44362-10	297-355
PAF25-04000017S	61N-44362-00	297-355
PAF25-04000021	61N-45214-00	295
PAF25-04000022	6L2-45214-00	295
PAF25-04000023	6L2-45215-00	295
PAF25-04010000L	61N-45510-10	297
PAF25-04010000S	61N-45510-00	297
PAF25-04030000L	65W-44150-10	297
PAF25-04030000S	65W-44150-00	297
PAF25-04050000	61N-44311-01	297
PAF25-04050001	61N-44311-01	148-154-155-297-355
PAF25-04050003	93210-45161	66-154-155-297-355
PAF25-04050004	6L2-44367-00	66-154-155-293-297-355
PAF25-04060000	648-45633-11	295
PAF25-04060002	90501-10065	295-355-357
PAF25-04060003	664-45631-02	295
PAF25-04060007	90201-20417	295
PAF25-04070000	61N-45361-01-8D	295-388-389
PAF25-04070001	61N-45361-01-4D	295-355
PAF25-04070004	61N-45571-00	295
PAF25-04070005-1	6L2-45577-00-10	295-355
PAF25-04070005-3	6L2-45577-00-12	295
PAF25-04080000	664-45947-01-EL	295
PAF25-04090000L	65W-45300-01-4D	278
PAF25-04090000L	65W-45300-10-4D	295
PAF25-04090000S	65W-45300-00-4D	295
PAF25-04090000S	65W-45300-01-4D	278
PAF25-05000002	90119-09M00	191-197-207
PAF25-05000003		191
PAF25-05000004	65W-11356-00	191
PAF25-05000005	65W-11191-00-94	191
PAF25-05000007	65W-15121-00	191
PAF25-05000016	90464-07M05	241
PAF25-05000021	65W-11536-10	193-199
PAF25-05000022	65W-11476-00	193-199
PAF25-05000024	90280-04M06	199
PAF25-05000026	90170-20137	195
PAF25-05000026	90170-35M47	193
PAF25-05000100	5GH-13440-00	191
PAF25-05010000	65W-15100-00-94	191
PAF25-05010103	65W-11168-00	191
PAF25-05010106	65W-11119-00	197
PAF25-05010106	66W-11119-00	191
PAF25-05010107	65W-13286-00	191
PAF25-05010108	65W-11169-00	191
PAF25-05010111	65W-41114-00	141-191
PAF25-05010112	65W-41113-01-94	191
PAF25-05010113	62Y-11372-01	191
PAF25-05010113	62Y-12481-10	203-205
PAF25-05010201	65W-85790-00	103
PAF25-05010302-1	62Y-11416-00	193-199
PAF25-05010302-2	62Y-11416-10	193-199
PAF25-05020001	65W-11411-01	193-219
PAF25-05020002	93102-35M47	193-199
PAF25-05020003	93102-43M42	193-195-199-201-203-207
PAF25-05020100	65W-11631-00-96	193-199-219
PAF25-05020101	65W-11631-00-96	193-199
PAF25-05020105	62Y-11633-00	193-195-199-201-203-205-207-219
PAF25-05020106	93450-17129	193-195-199-201-203-205-207-219-231
PAF25-05020200	62Y-11650-10	199
PAF25-05020200	67C-11650-00	193
PAF25-05020200	6C5-11650-00	195-203-207
PAF25-05020200	6C5-11650-10	201-205
PAF25-05020203-1	62Y-11656-00	193-199
PAF25-05020203-2	62Y-11656-00	193
PAF25-05020203-2	62Y-11656-10	199
PAF25-05020204	62Y-11654-00	193-199
PAF25-05020204	6AH-11654-00	189
PAF25-05020204	6C5-11654-00	195-201-203-205-207
PAF25-05020301	65W-11642-11	193
PAF25-05020310	65W-11665-00	193
PAF25-05040000	65W-11181-30	191-215-218
PAF25-05050001	67C-12111-00	193-199
PAF25-05050002	62Y-12121-00	193-199-207

REF	R.O. / OEM	
PAF25-05050003	62Y-12116-00	193-195-199-201-203-207
PAF25-05050005	51Y-12114-00	193-195-199-201-203-207
PAF25-05050006	90109-06M65	191-195-197-201-203-205-207
PAF25-05050007	90430-06014	191-195-197-201-203-205-207
PAF25-05050008	65W-12146-00	193
PAF25-05050009	62Y-12238-00	193-207
PAF25-05050011	62Y-12216-00	193-199-207
PAF25-05050012	62Y-12231-00	193-207
PAF25-05050013	93210-12MG9	193-199-207
PAF25-05050014	93210-14515	193-199-207
PAF25-05050015	93210-33MH2	193-199-207
PAF25-05050016	93605-14143	193-199-207
PAF25-05050017	65W-11537-01	193
PAF25-05050018	90201-10144	201
PAF25-05050018	90201-10M06	193-199-207
PAF25-05050019	90109-08M63	193-199-207
PAF25-05050021	93102-37004	189
PAF25-05050021	93102-37M40	193-195-199-201-203-205-207
PAF25-05050100	65W-11111-02-94	191
PAF25-05050200	65W-12171-10	193
PAF25-05050300	65W-12151-00	193
PAF25-05050301	65W-12151-00	193-199
PAF25-05050400	65W-13300-00	193
PAF25-05070000	65W-14901-12	91
PAF25-05070019	6H4-14548-00	99
PAF25-05080004	65W-14457-10	268
PAF25-05110000	65W-85580-00	107
PAF25-05120000	65W-85570-01	104
PAF25-05130000	62Y-24410-04	85
PAF25-05130005	62Y-24471-00	87
PAF25-05140000	65W-85510-10	121
PAF25-05150000	65W-85550-01	109
PAF25-07000007W	703-48345-01	127
PAF25-07000300W	65W-61350-00	131
PAF4-00000001	90387-06806	285-287
PAF4-00000001	90387-06M14	345
PAF4-00000006	67D-45113-A0	175-217-218
PAF4-01090100	6EG-G2138-00	131
PAF4-01090100	6G1-42138-00	131
PAF4-01090100	6G1-42138-01	131
PAF4-01090300	68D-G2177-10	134
PAF4-01090300	6EE-G2177-00	134
PAF4-01090401	682-82556-00	120
PAF4-02040001	68D-G4360-10	285
PAF4-02040001S	68D-G4360-00	285
PAF4-02040002	68D-G4365-00	283-285
PAF4-03000001	68D-G5300-11-4D	285
PAF4-03000002	6E0-45317-09	285-287
PAF4-03000003	6E0-45316-09	285-287
PAF4-03000004L	68D-G5511-10	287
PAF4-03000004L	6E0-45511-11	285
PAF4-03000004S	68D-G5511-00	287
PAF4-03000004S	6E0-45511-01	285
PAF4-03000005	90467-08M01	285-287-345
PAF4-03000006	90201-11M49	287-343
PAF4-03000006	90204-11M49	285-345
PAF4-03000007	6E0-45551-00	285
PAF4-03000008	67D-45635-00	285-287
PAF4-03000011	68D-G5315-A0	285-287
PAF4-03000011	6E0-45315-A0	345
PAF4-03000012	68D-G5321-00	285-287
PAF4-03000012	6E0-45321-01-5B	345
PAF4-03000013	93604-18080	283-285-287-345
PAF4-03000015	6E0-44323-00	154-155-285-345
PAF4-03000016	93604-09066	64-154-285-287-345
PAF4-03000017	6E0-44322-02	285
PAF4-03000018	68D-G4315-A0	285
PAF4-03000018	6BX-G4315-01	287
PAF4-03000018	6E0-44315-A0	345
PAF4-03000018	6EE-G4315-00	64-154
PAF4-03000019	68D-G4311-01	147-285
PAF4-03000019	6E0-44311-00	154-345
PAF4-03000020	68D-G4328-00	285-287
PAF4-03000020	6E0-44328-00	345
PAF4-03000021	67D-44366-00	285-287
PAF4-03000021	6E0-44366-00	345
PAF4-03000021	6R0-44366-00	283
PAF4-03000021	6EE-G4366-00	154-155
PAF4-03000022	68D-G5251-00	64-283-285
PAF4-03000025	68D-G5978-00	283
PAF4-03000025	68D-G5987-00	285-287
PAF4-03000025	6L5-45987-01	345
PAF4-03000025	6EE-G5987-00	405
PAF4-03000026	90201-08M54	283-285-287-345-405
PAF4-03000027	93101-10M14	285-287
PAF4-03010000	67D-45560-00	285-287-387
PAF4-03020000L	68D-G4150-10	285
PAF4-03020000L	6BX-G4150-10	287
PAF4-03020000S	68D-G4150-00	285
PAF4-03020000S	6BX-G4150-00	287
PAF4-03030002	67D-45631-01	285-287
PAF4-03030003	90501-10064	283
PAF4-03040000	67D-45570-00	285-287-387
PAF4-03050001	68D-G5361-00-4D	285-287

REF	R.O. / OEM	
PAF4-03050001	6E0-45361-01-4D	345-387
PAF4-03050002	93101-13M12	283-285
PAF4-03060000	6E0-44352-00	64-285
PAF4-03070000	6E0-45943-01	287
PAF4-03070000	6E0-45943-01-EL	285-402
PAF4-03080000	6L5-45616-00	283-285-287-405
PAF4-0310000L	68D-65300-11-4D	277
PAF4-0310000L	68D-G5300-10-4D	285
PAF4-0310000S	68D-65300-03-4D	277
PAF4-0310000S	68D-G5300-00-4D	285
PAF4-04000000	680-WE090-11-15	175
PAF4-04000001	90105-08M76	171
PAF4-04000001	97095-08020	331-335-337-341
PAF4-04000001	97095-08020-00	177
PAF4-04000002	68D-11351-A0	177-270
PAF4-04000003	99510-10114	175-177-179
PAF4-04000004	90201-266P2	175
PAF4-04000006	90201-08818	177
PAF4-04000006	90201-08818-00	171
PAF4-04000006	90430-08143	197-209-211
PAF4-04000006	90430-08800	179
PAF4-04000006	90430-08800-00	175
PAF4-04000006	90201-08818	64-66
PAF4-04000007	68D-E5362-00	177
PAF4-04000008	93210-24M79	177-180-185-201-203-205
PAF4-04000009	68D-E1169-A0	177
PAF4-04000010	68D-E1168-00	177
PAF4-04000010	68D-E5362-00	179
PAF4-04000011	68D-E2414-A0	64-138-173-175-179
PAF4-04000012	90445-09807	175
PAF4-04000014	67D-11181-A0	175-215-218
PAF4-04000015	67D-12154-00	175
PAF4-04000017	68D-E1193-A0	175
PAF4-04000018	67D-11191-00	175
PAF4-04000019	90280-04M06	193-207
PAF4-04000030	90467-08004	75-243
PAF4-04000030	90467-09M09	191-225
PAF4-04000030	90467-09M09	64-65-67
PAF4-04000033	90105-08046-00	175
PAF4-04000034	90105-08M36	173-179-180
PAF4-04000034	90105-08M36-00	175
PAF4-04000036	6EE-E5362-00	177
PAF4-04000038	67D-85640-00	106
PAF4-04010003	68D-E5346-00	177
PAF4-04010004	93102-25090	177
PAF4-04010100	68D-E1311-02-15	177
PAF4-04010102	650-24378-00	173-175-177-179-180-235-237-241
PAF4-04010102	6E9-24378-00	187
PAF4-04020001	68D-E1631-00-96	175
PAF4-04020005	68D-E1633-00	175-219
PAF4-04020006	93450-14088	175-219
PAF4-04020100	67D-11650-00	175
PAF4-04020103	67D-11654-00	175
PAF4-04020200	68D-E1631-00-96	175-219
PAF4-04030000	67D-11400-00	175-219
PAF4-04040000	68D-E2170-00	175
PAF4-04050100	68D-E3102-00	177
PAF4-04050200	68D-E5111-00-1S	177
PAF4-04060000	6EE-E5396-00-CA	177
PAF4-04060001	68D-E5396-00-5B	177-179
PAF4-04060002	93210-35537	171-177
PAF4-04060004	93102-10004	177-179
PAF4-04070000	68D-E2413-00-1S	179
PAF4-04070001	67D-12413-00-1S	175
PAF4-04070003	68D-E1325-00	64-65-66-67-68-69-70-71-173-175-179
PAF4-04070100	68D-E2413-001S	175
PAF4-04080005	67D-12111-00	175
PAF4-04080006	67D-12121-00	175-180
PAF4-04080007	68T-12116-00	175-179-180
PAF4-04080008	68D-E2113-00	173-175
PAF4-04080009	68D-E2155-00	175
PAF4-04080101	68D-E1111-10-1S	175
PAF4-04090000	67D-24410-03	85
PAF4-04120005	6L5-24251-00	64-80-81-82
PAF4-04120100	67D-24610-00	75
PAF4-04120100	67D-24610-02	75
PAF4-04120100	67D-24610-03	75
PAF4-04120100	67D-24610-04	75
PAF4-04120100	68D-24610-10	75
PAF4-04120103	624-24634-00	75
PAF4-04130100	6G1-15755-00	113
PAF4-04130100	6G1-15779-00	113
PAF4-04140000	67D-14301-03	91
PAF4-05000010	90467-13M13	75
PAF4-05000300	646-24251-01	80
PAF4-05000300	646-24251-02	64-80-81
PAF40-04000000L	66T-45300-10-4D	279
PAF40-04000000L	66T-45311-13-8D	279
PAF40-05000053	90445-10M40	209
PAF40-05040003	62Y-12279-00	207
PAF40-05040006	67C-11537-01	199
PAF40-05070002	62Y-14485-00	197-201-203-207
PAF40-0701000EI	907-94469-05	79
PAF40-13000000EI	703-48272-12	126
PAF6-00000001	6BX-45113-00	151-179-217
PAF6-03000002	6BX-44322-00	154-287
PAF6-04000001	6BX-11351-00	179

REF	R.O. / OEM	
PAF6-04000002	6BX-11181-00	179-215
PAF6-04000003	6BX-12154-00	179
PAF6-04000004	6BX-E1191-00-5B	179
PAF6-04000005	6BX-11356-00	179
PAF6-04000009	6G0-82519-00	179
PAF6-04000020	6BX-F4323-00	179
PAF6-04010004	6BX-E1168-00	179
PAF6-04030000	6BX-E2170-00	179
PAF6-04050001	6BX-12111-00	179
PAF6-04050002	6AU-12121-00	179
PAF6-04050003	60R-12113-00	179
PAF6-04050004	6BX-E2155-00	179
PAF6-04050100	6BX-E1111-00-1S	179
PAF60-02000007	6C5-44361-00	313
PAF60-04000000	69W-45300-00-4D	278
PAF60-04000000	69W-45300-00-8D	278
PAF60-04000000	69W-45300-01-8D	278
PAF60-04000000	69W-45300-04-8D	311
PAF60-04000001	69W-45301-00-8D	311
PAF60-04000002	69W-45551-00	311
PAF60-04000003	62Y-44151-00	303-307-311
PAF60-04000008	63D-45344-00	313
PAF60-04000101	63D-45321-00	305-309-313
PAF60-04000500	62Y-45571-00	311
PAF60-04000600	69W-45560-00	311
PAF60-04010000	69W-45501-00	313
PAF60-04020001	63D-45611-00	303-307-311
PAF60-04020002	90501-18001	303-307-311
PAF60-04020003	62Y-45631-00	307-311
PAF60-04020005	63D-45635-00	303-307-311
PAF60-04030000	63D-45361-02-8D	307-311
PAF60-06000000	6C5-43800-11	124
PAF60-06000000	6C5-43800-12	124
PAF8-05000022	90119-06MA3	187
PAF8-05030006	7NJ-12117-00	173-175
PAF8-05030007	7NJ-12118-00	173-175-179
PAGB/T1099-3X5X13	90280-03017	201
PAGB/T1099-3X5X13	90280-03M01	180-185-189-195-203-205
PAGB/T276-6004C2	93306-004UO	345
PAGB/T276-6004C2	93306-004YH	289
PAGB/T276-6004C2	93306-205YD	177
PAGB/T276-6006/P6	93306-00612	295
PAGB/T276-62/22/P6	93306-272Y2	171
PAGB/T290F-2020	93315-220V7	297
PAGB/T345.2-D32.5XD1	93210-35537	179
PAGB/T3452.1-13X2	93210-13M63	64-65-68-69-70-71 -180-187-195-201-203-205
PAGB/T3452.1-25.8X2	93210-22164	355
PAGB/T3452.1-25.8X2	93210-26130	297-355
PAGB/T3452.1-32.5X1.8	93210-32738	65-66-67-68-69-70-71
PAGB/T5287-6	90201-06M94	180-185
PAGB/T5782-2000S	90119-06M40	285
PAGB/T5782-M6X125	95895-06035	295
PAGB/T5782-M6X125	97013-06035	193-285
PAGB/T5782-M6X25	97095-06025	209-213-231
PAGB/T5782-M6X35	90119-06MA5	191-203-205-233-241
PAGB/T5782-M6X45	90105-06M25	175
PAGB/T5782-M6X45	947395-06040	349
PAGB/T5782-M8X35	65W-08M87	191
PAGB/T5782-M8X80	90119-08M01	191
PAGB/T5783-M5X10	97013-05010	179
PAGB/T5783-M5X12	68D-E5362-00	183
PAGB/T5783-M5X12	90119-06M48	295
PAGB/T5783-M5X12	90201-08818	183
PAGB/T5783-M5X12	90465-08M99	171
PAGB/T5783-M5X12	92995-06600	185-237
PAGB/T5783-M5X12	93102-25090	183
PAGB/T5783-M5X12	93306-205YD	183
PAGB/T5783-M5X12	95895-06016	287-289
PAGB/T5783-M5X12	95895-06016-00	285
PAGB/T5783-M5X12	95895-06020	283
PAGB/T5783-M5X12	97013-06016	185-223-229
PAGB/T5783-M5X12	97013-06045	171
PAGB/T5783-M5X12	97095-05012	191
PAGB/T5783-M5X12	97095-0512	183
PAGB/T5783-M5X12	97095-06035	185
PAGB/T5783-M5X12	97575-08550-00	183
PAGB/T5783-M5X16	97095-05016	343
PAGB/T5783-M6X10	97095-06010	197-349-363
PAGB/T5783-M6X12	95817-06012	171
PAGB/T5783-M6X12	95817-06012-00	177
PAGB/T5783-M6X12	97013-06012	189
PAGB/T5783-M6X14	90119-06M80-00	177
PAGB/T5783-M6X14	95895-06012	287
PAGB/T5783-M6X16	90105-06039	173
PAGB/T5783-M6X16	90105-06M14	175
PAGB/T5783-M6X16	92995-06600	371
PAGB/T5783-M6X16	97090-06014	343
PAGB/T5783-M6X16	97095-06016	221-223-225-227-231-235-239-321-339
PAGB/T5783-M6X20	65W-12228-00	191
PAGB/T5783-M6X20	90119-06MA2	179-227
PAGB/T5783-M6X20	90119-06MA3	191
PAGB/T5783-M6X20	97095-06020	171-173-179-180-191-195-197-201-203-205-207-209-213-233-237-241-291-347-351

REF	R.O. / OEM	
PAGB/T5783-M6X20	97095-06020-00	175
PAGB/T5783-M6X20	97395-06020	349
PAGB/T5783-M6X20	97575-06520	293
PAGB/T5783-M6X20	97595-06520	185-187
PAGB/T5783-M6X20	65W-12228-00	191
PAGB/T5783-M6X25	90119-06MA3	187-191-235
PAGB/T5783-M6X25	90119-06MA5	191
PAGB/T5783-M6X25	90119-08MA5	235
PAGB/T5783-M6X25	97513-06525	185
PAGB/T5783-M6X30	90119-06M04	227
PAGB/T5783-M6X30	90119-06MA4	235
PAGB/T5783-M6X30	90119-06MA5	195
PAGB/T5783-M6X30	95895-06035	293
PAGB/T5783-M6X30	970-95-06030	231
PAGB/T5783-M6X30	97095-06030	180-211-213-343-346
PAGB/T5783-M6X35	90105-06035	189
PAGB/T5783-M6X35	90119-06MA5	243
PAGB/T5783-M6X35	90119-06MAS	191
PAGB/T5783-M6X35	95895-06012	343-347
PAGB/T5783-M8X14	97095-08014	171-179
PAGB/T5783-M8X14	97095-08014-00	175
PAGB/T5783-M8X20	97095-08020	179
PAGB/T5783-M8X20	97095-08020-00	177
PAGB/T5783-M8X25	90105-081A7	189
PAGB/T5783-M8X25	97075-08025	209
PAGB/T5783-M8X25	97080-08025	289-291-292-351
PAGB/T5783-M8X25	97095-08025	299-303-307-311-325-329-333-339
PAGB/T5783-M8X30	97575-08530	293
PAGB/T5783-M8X35	90101-08001	235
PAGB/T5783-M8X35	97075-08035	289
PAGB/T5783-M8X35	97095-08035	303-307-311
PAGB/T5787-1986	97575-08550-00	177
PAGB/T6182-M5	90185-05002	289-293-315-319-323-327-331-335-337-341-350
PAGB/T818-M4X10	97607-04210	187
PAGB/T818-M4X10	98507-04010	195-197-201-203-205-207
PAGB/T818-M4X6	98503-04066-00	177
PAGB/T818-M5X12	97095-05012	197-203-205-207
PAGB/T818-M5X16	98780-05016	211
PAGB/T818-M5X25	97880-05025	173-179-203-205
PAGB/T818-M5X25	97880-05025-00	175
PAGB/T818-M5X25	98980-05025	187
PAGB/T818-M6X16	98580-06016	365
PAGB/T820-M4X12	98780-04015	213-239
PAGB/T820-M4X12	98780-04016	187-209-237
PAGB/T820-M5X20	90152-05011	293
PAGB/T820-M5X25	90152-05M03	289
PAGB/T820-M5X25	90152-05M04	350
PAGB/T820-M5X30	6E0-W0078-00	345
PAGB/T820-M5X30	6E0-W0078-01	345
PAGB/T820-M5X30	6E0-W0078-02	345
PAGB/T820-M5X30	90142-05M06	299
PAGB/T820-M5X30	90151-05M05	295
PAGB/T820-M5X30	90152-05010	303-311
PAGB/T820-M5X30	90152-05M06	307
PAGB/T820-M5X30	90152-05M06	365
PAGB/T845-ST4.2X16	97780-40112	349
PAGB/T845-ST4.8X9	97780-50510	349
PAGB/T848-6	92903-06600	203-205
PAGB/T861.1-6	92990-06300	293
PAGB/T861.1-87	92990-06300	283-287-289-295-343-347
PAGB/T879.4-3X20	91690-30010	235
PAGB/T889.1-2000	90185-05002	295
PAGB/T889.1-M5	95380-05600	299-303-307-311-365
PAGB/T893.1-22	93420-22M03	287
PAGB/T896-86	93430-06005	343
PAGB/T896-86	99001-06600	283-285-345
PAGB/T896-9	93430-10M00	132
PAGB/T896-9	99080-10600	132
PAGB/T91-1.6X12	91490-25030	283-285-287-345
PAGB/T91-1.6X12	91490-30022	64-65-66-295-355-405
PAGB/T91-2.5X20	91490-30020	349
PAGB/T96-10	90201-10M01	293-349
PAGB/T96-6	92995-06600	195
PAGB/T97.1-10	92995-10100	299
PAGB/T97.1-14	92990-14200	355-357-405
PAGB/T97.1-4	92907-04600	195
PAGB/T97.1-5	92995-05600	191-197-207
PAGB/T97.1-6	92885-06600	177
PAGB/T97.1-6	92903-06600	187-197-207
PAGB/T97.1-6	92990-06600	185-231-301-343-347-349-367
PAGB/T97.1-6	92995-06600	171-173-175-179-180-195-197-201-203-205-209-211-213-221-223-225-235-239-287-289-291-317-321-339-351-355
PAGB/T97.1-6	97095-06016	371
PAGB/T97.1-8	66M-11328-00	193

REF	R.O. / OEM	
PAGB/T97.1-8	66M-11356-00	191
PAGB/T97.1-8	92955-08600-00	177
PAGB/T97.1-8	92990-08600	367
PAGB/T97.1-8	92990-14200	295
PAGB/T97.1-8	92995-05600	183-203-205
PAGB/T97.1-8	92995-06600	185-227-229-233-241
PAGB/T97.1-8	92995-08600	179-209-214-325-329-333-335-337-341-343-363-369-377
PAGB/T97.1-8	92995-10600	295-299-303-307-311-315-319-331
PAGB/T97.1-8	93102-20108	183
PAGB/T97.1-8	97595-06520	183-191-193-283
PAGBT3452.1-97.5X1.8	65W-15663-00	191
PAHI-CAP32004JRKOYO	93332-000W5	297
PAHT-2.5X50	90465-11M10	293
PAHT-2.5X60	90465-11M10	180-191-197-207-209-213-301-305-309-313-317-321-325
PAHT-2.5X60	90467-06016	221-225-231-237-239-241
PAHT2.5X50	90465-11M10	187
PAJASOF404-19-033	93210-33M49	335-339
PAJASOF404-19-033	93210-33M85	64-154-283
PAJASOF404-31-045	93210-44398	351
PAJASOF40424-050	93210-48001	313
PAJASOF40431-025	93210-24M79	64-65-69-70-171-181-187-191-195-197-207-209-211-213-214
PAJB/T9740.1-M6	93700-06M03	133
PAJISB2401P48	93210-48214	283-285
PAKOYOHI-CAP322/32	93332-00092	311
PANTN16003EY	93316-003Y0	283
PANTN6205C3	93306-205B2	179
PAPS2700.04.03	51Y-12119-00	175-185-199-203-205-207-213
PAT15-04010202	624-14485-00	235
PAT15-04010202	6H1-14485-00	171
PAT20-13000500W	703-48861-11	1276
PAT36-04000023	90465-06M86	179
PAT40-02000002	663-44367-00	301-305-309-313-317-321-367-371
PAT40-04000002	6H4-45536-00	301-305-309-313
PAT40-04000003-1	663-45587-01	309
PAT40-04000003-1	663-45587-01-10	367
PAT40-04000003-2	663-45587-01-12	367
PAT40-04000003-2	663-45587-10	309
PAT40-04000003-3	663-45587-01-15	367
PAT40-04000003-3	663-45587-20	309
PAT40-04000003-4	663-45587-01-18	367
PAT40-04000003-4	663-45587-30	309
PAT40-04000003-5	663-45587-01-30	367
PAT40-04000003-5	663-45587-40	309
PAT40-04000003-6	663-45587-01-40	367
PAT40-04000003-6	663-45587-50	309
PAT40-04000003-7	663-45587-01-50	367
PAT40-04000003-7	663-45587-60	309
PAT40-04000004-1	663-45567-01	299-303-307-311
PAT40-04000004-1	663-45567-01-10	365
PAT40-04000004-2	663-45567-01-12	365
PAT40-04000004-2	663-45567-10	299-303-307-311
PAT40-04000004-3	663-45567-01-15	365
PAT40-04000004-3	663-45567-20	299-303-307-311
PAT40-04000004-5	663-45567-01-30	365
PAT40-04000004-5	663-45567-40	299-303-307-311
PAT40-04000007	66T-45321-00	301
PAT40-04000008	90201-27M00	301-305-309-313
PAT40-04000009	66T-45344-01	301-305-309
PAT40-04000014	63D-45375-00	301-305-309-313
PAT40-04000022	63D-45214-00	299-303-307-311
PAT40-04000023	63D-45215-00	299-303-307-311
PAT40-04000027	93332-00079	367
PAT40-04000003-1	663-45587-01	301-305-313
PAT40-04000003-2	663-45587-10	301-305-313
PAT40-04000003-3	663-45587-20	301-305-313
PAT40-04000003-4	663-45587-30	301-305-313
PAT40-04000003-5	663-45587-40	301-305-313
PAT40-04000003-6	663-45587-50	301-305-313
PAT40-04000003-7	663-45587-60	301-305-313
PAT40-04000201	66T-44311-00	148-301-305
PAT40-04040001	6BG-44341-00	313
PAT40-04050002	90501-15M01	361
PAT40-04050005	67C-45633-00	307-311
PAT40-04050007	90201-22008	311
PAT40-04060005-2	63D-45577-10	299-303-307-311
PAT40-04060005-3	63D-45577-20	299-303-307-311
PAT40-04060005-4	63D-45577-30	299-303-307-311
PAT40-04060005-5	63D-45577-40	299-303-307-311
PAT40-04060005-6	63D-45577-50	299-303-307-311
PAT40-04060005-7	63D-45577-60	299-303-307-311
PAT40-04070000	69W-45941-00-EL	402
PAT40-05000100	6AH-82560-00	103
PAT40-10000000	65W-43800-00-4D	124
PAT40-10000000	65W-43800-01-4D	124
PAT40-10000000	65W-43800-02-4D	124
PAT40-10000000	65W-43800-03-4D	124
PAT40-10000000	65W-43800-20-4D	124
PAT40-10000000	65W-43800-21-4D	124
PAT40-10000000	65W-43800-22-8D	124
PAT40-10000000	65W-43800-23-8D	124
PAT40-10020500	65W-43880-00	123
PAT40-10020500	65W-43880-01	123
PAT85-00000012	90105-10M00	323-327-331-335-337-375-379
PAT85-00000012	90105-16M67	315-319
PAT85-00000017	90386-18M35	133
PAT85-01010203	90386-10M16	133
PAT85-01020003	90386-30M78	134
PAT85-01020005	90386-30M77	133
PAT85-040000003-B	688-45587-01	317-321
PAT85-040000004-B	688-45567-01	315-319
PAT85-05000023	6C5-82105-01	113
PAT85-05000023	6H0-82105-02	113
PAT85-05000023	6H0-82105-J2	113
PAT85-05030300	6AH-81960-00	119
PAT85-08010000W	703-48205-10	126
PAT85-08010100	688-8258A-20	128
PH130-0005	6E5-81800-10	110
PH130-0005	6E5-81800-11	110
PH130-0005	6E5-81800-12	110
PH130-0007	676-81800-10	111
PH130-0007	697-81800-10	111
PH130-0007	697-81800-11	111
PH130-0007	697-81800-12	111
PH130-0007	99999-03249	111
PH130-0028	67C-81800-00	110
PH130-0028	67C-81800-01	110
PH130-0028	67C-81800-02	110
PH130-0029	65W-81800-00	111
PH130-0029	65W-81800-01	111
PH130-0029	65W-81800-02	111
PH130-0029	65W-81800-03	111
PH130-0034	66M-81800-01	111
PH130-0034	66M-81800-02	111
PH130-0049	689-81800-10	110
PH130-0049	689-81800-11	110
PH130-0049	689-81800-12	110
PH130-0049	689-81800-13	110
PH130-0050	6H3-81800-10	111
PH130-0050	6H3-81800-11	111
PH130-0051	61H-81800-00	110
PH130-0051	61H-81800-01	110
PH130-0051	6K7-81800-10	110
PH130-0051	6N7-81800-00	110
PH130-0051	6N7-81800-01	110
PH130-0051	6N7-81800-10	110
PH130-0051	99999-03938	110
PH130-0055	67F-81800-01	112
PH130-0055	67F-81800-02	112
PH130-0055	67F-81800-03	112
PH130-0055	67F-81800-04	112
PH130-0056	68F-81800-00	111
PH130-0056	68F-81800-01	111
PH130-0056	68F-81800-03	111
PH130-0056	6C5-81800-00	111
PH130-0056	6CJ-81800-00	111
PH130-0057	68V-81800-00	111
PH130-0057	68V-81800-01	111
PH130-0057	68V-81800-02	111
PH130-0058	688-81800-10	111
PH130-0058	688-81800-11	111
PH130-0058	688-81800-12	111
PH130-0059	61A-81800-00	110
PH130-0059	61A-81800-01	110
PH130-0059	69L-81800-00	110
PH130-0059	69W-81800-00	110
PH130-0061	682-81800-10	110
PH130-0061	682-81800-11	110
PH130-0061	682-81800-12	110
PH130-0061	6L2-81800-10	110
PH130-0061	6L2-81800-11	110
PH130-0061	6L2-81800-12	110
PH130-0062	6F5-81800-10	110
PH130-0062	6F5-81800-11	110
PH130-0062	6G8-818000-10	110
PH130-0062	6G8-818000-11	110
PH130-0062	6J4-81800-00	110
PH130-0062	6J4-81800-01	110
PH130-0063	6H4-81800-10	110
PH130-0063	6H4-81800-11	110
PH130-0063	6H4-81800-12	110
PH130-0073	63P-81800-00	112
PH130-0073	6BR-81800-00	112
PH130-0073	6BR-81800-01	112
PH130-0074	69J-81800-00	112
PH130-0074	69J-81800-01	112
PH130-0076	60V-81800-00	112
PH130-0076	60X-81800-00	112
PH130-0076	6C9-81800-00	112
PH130-0076	6D0-81800-00	112
PH130-0084	66M-81800-00	110
PH130-0084	66M-81800-01	110
PH130-0084	66M-81800-02	110
PH200-T029	6H1-43880-02	122
PH200-T030	6G5-43880-00	123
PH200-T030	6G5-43880-01	123
PH200-T030	6G5-43880-02	123
PH200-T035	62X-43880-00	122
PH200-T035	62X-43880-01	122
PH200-T035	62X-43880-09	122
PH200-T036	62Y-43880-01	122
PH200-T036	62Y-43880-02	122
PH200-T036	69W-43880-00	122
PH200-T036	69W-43880-01	122
PH200-T036	CS3-43880-00	122
PH200-T037	688-43880-11	123
PH200-T037	6E5-43880-00	123
PH200-T037	6E5-43880-01	123
PH200-T037	6E5-43880-02	123
PH200-T041	6H1-43880-00	122
PH200-T044	67F-43880-00	123
PH200-T045	6C5-43880-00	123
PH200-T045	6C5-43880-01	123
PH200-T048	6H5-43880-00	122
PH200-T048	6H5-43880-01	122
PH200-T048	6H5-43880-02	122
PH200-T048	6H5-43880-09	122
PH200-T050	61A-43880-00	124
PH200-T050	61A-43880-01	124
PH200-T057	67H-43880-00	123
PH200-T057	68W-43880-03	123
PH200-T057	6AE-43880-00	123
PH200-T057	6AE-43880-01	123
PH200-T057	6AE-43880-03	123
PH200-T057	6AE-43880-04	123
PH200-T068	6D8-43880-00	123
PH200-T068	6D8-43880-01	123
PH200-T068	6D8-43880-09	123
PH200-T069	60V-43880-00	123
PH200-T069	69J-43880-00	123
PH200-T069	69J-43880-01	123
PH200-WH01		122
PH375-0034	65W-81941-00	111-114
PH375-0036	65W-81941-00	110
PH375-0042	68N-81940-00	114
PH375-0042	68V-8194A-00	114
PH375-0047	6E5-81950-01	110-115
PH375-0048	6E5-8195A-01	115
PH375-0048	6E5-8195C-01	115
POWERHEAD2.6	69M-WE0090-01-1S	173
POWERHEAD20-25		193
PRE3300C05	YMM-21005-00-00	130
PRE3300C06	YMM-21006-C8-00	130
PRE3300C07	YMM-21007-C8-00	130
PRE3300C08	YMM-21008-C8-00	130
PRE3300C09	YMM-21009-C8-00	130
PRE3300C10	YMM-21010-C8-00	130
PRE3300C11	YMM-21011-C8-00	130
PRE3300C12	YMM-21012-C8-00	130
PRE3300C13	YMM-21013-C8-00	130
PRE3300C14	YMM-21014-C8-00	130
PRE3300C15	YMM-21015-C8-00	130
PRE3300C16	YMM-21016-C8-00	130
PRE3300C17	YMM-21017-C8-00	130
PRE3300C18	YMM-21018-C8-00	130
PRE3300C19	YMM-21019-C8-00	130
PRE3300C20	YMM-21020-C8-00	130
PRE3300C21	YMM-21021-C8-00	130
PRE3300C22	YMM-21022-C8-00	130
PRE3300C23	YMM-21023-C8-00	130
PRE3300C24	YMM-21024-C8-00	130
PRE3300C25	YMM-21025-C8-00	130
PRE3300C26	YMM-21026-C8-00	130
PRE3300C27	YMM-21027-C8-00	130
PRE3300C28	YMM-21028-C8-00	130
PRE3300C29	YMM-21029-C8-00	130
PRE3300C30	YMM-21030-C8-00	130

R

RAC120R-RAC-01	YMM-2W114-00	79
RAC320R-RAC-01	YMM-2W227-01	78
RAC320R-RAC-03		78
RAC490R-RAC-01	YMM-2W227-01	79
RACPFF5510		77
RACRK22628		79
RACS3213	MAR-24563-00	78
RACS3227	YMM-2E227-00	79
RACS3227	YMM-2E227-01	79
RACS3240	YMM-2E114-00	79
REC09168-12017	90430-10M11	64-65
REC09401-11425	90465-11M59	75-213
REC09401-11425BULK		75
REC10W30U3	YMD-63050-04	84
REC10W30U6	YMD-63050-01	84
REC10W40U3	YMD-63060-04	84
REC10W40U6	YMD-63060-01	84
REC13650-52G00	63P-85886-00	102
REC13650-56B00	65L-85886-00	102
REC18-6865	63P-43880-03-00	124
REC18-6865	64E-43880-02-40	124
REC18-6865	68V-43880-03-40	124
REC22-8M0001721		75

REF	R.O. / OEM	
REC24942		77
REC24950		78
REC24952		78
REC25000		77
REC25010		77
REC25020		77
REC25030		77
REC25W40U3		84
REC2TU3	YMD-63021-04	84
REC2TU6	YMD-63021-01	84
REC35-802893Q		77
REC35-802893Q01		77
REC35-80365M	646-24251-01	80
REC35-80365M	646-24251-02	80-82-83
REC35-822626Q15	69J-13440-00	83
REC35-822626Q15	69J-13440-01	83-211-213
REC35-822626Q15	69J-13440-03	71-72-73-83
REC3FV-13440-00	3FV-13440-00	83
REC3FV-13440-00	3FV-13440-10	83
REC3FV-13440-00	3FV-13440-20	83
REC3FV-13440-00	3FV-13440-30	67-83
REC40135		80
REC40145	65W-24251-00	82
REC40145	65W-24251-10	80
REC40145		65-67-81
REC40155		80
REC40165	67F-24251-02	80-81-82
REC405-A20	6E5-45300-16-8D	375
REC405-A20	6E5-45300-17-8D	280
REC405-A25	6E5-45300-26-8D	375
REC405-A25	6E5-45300-27-8D	280
REC40970		121
REC40990		121
REC416-A20	64D-45300-01-8D	280
REC416-A20	64D-45300-02-8D	379
REC416-A25	64D-45300-21-8D	280
REC416-A25	64D-45300-22-8D	379
REC416-B20	64K-45300-02-NA	281
REC416-B20F	63P-45300-00-8D	278
REC416-B20F	63P-45300-02-8D	327
REC416-B25F	63P-45300-10-8D	278
REC416-B25F	63P-45300-12-8D	327
REC418-A25	64P-45300-10-8D	280
REC418-B25F	64P-45300-10-8D	278
REC418-B25F	64P-45300-12-8D	327
REC421-A20	66K-45300-12-NA	281
REC421-A25	60V-45300-20-8D	281
REC421-B25F	69J-45300-21-8D	279
REC421-B25F	69J-45300-22-8D	331
REC421-B30F	69J-45300-32-8D	279
REC422-B25F	6P2-45300-20-8D	278-339
REC422-B25F	6P2-45300-21-8D	278-339
REC422-B25F	6P2-45300-40-8D	278
REC422-B25F	6P2-45300-41-8D	278
REC422-B25F	6P245300208D	278
REC422-B25F	6P245300218D	278
REC422-B25F	6P245300408D	278
REC422-B25F	6P245300418D	278
REC428-A25	60W-45300-20-8D	281
REC428-B25F	69K-45300-21-8D	279
REC428-B30F	69K-45300-34-8D	279
REC429-B25F	6P3-45300-40-8D	278-339
REC429-B25F	6P3-45300-41-8D	278-339
REC429-B25F	6P3-45300-42-8D	278
REC429-B25F	6P345300408D	278
REC429-B25F	6P345300418D	278
REC429-B25F	6P345300428D	278
REC48630-92J00	61A-43811-00	125
REC48630-92J00	63P-43811-10	125
REC48630-92J00	63P-43811-20	125
REC48630-92J00	64E-43811-02	125
REC48630-92J00	64E-43821-05	125
REC48630-92J00	6AW-4380R-01	125
REC48630-92J00	6EK-4380R-00	125
REC48630-94900	61A-43821-00	125
REC48630-94900	61A-43821-01	125
REC48630-94900	61A-43821-09	125
REC48630-94900	67F-4380R-00	125
REC48630-94900	67F-4380R-01	125
REC48630-94900	67F-43811-00	125
REC48630-96J03	64E-43820-00	125
REC48630-96J03	64E-43820-08	125
REC48630-96J03	64E-43820-09	125
REC48630-96J03	64E-43820-00	125
REC48630-96J03	64E-43820-08	125
REC48630-96J03	64E-43820-09	125
REC48630-96J03	64E-43821-00	125
REC48630-96J03	64E-43821-08	125
REC48630-96J03	64E-43821-09	125
REC48630-96J03	6AW-4380R-00	125
REC50M-14355-00	50M-14355-00	99
REC5GH-13440-00	5GH-13440-00	83-183-191-197-209
REC5GH-13440-00	5GH-13440-10	207
REC5GH-13440-00	5GH-13440-30	83
REC5GH-13440-00	5GH-13440-70	83
REC5GH-13440-00	5GH-13440-70	65-66-67-68-69-70-71-83
REC5GH-13440-60	5GH-13440-20	195-203
REC5GH-13440-60	5GH-13440-50	83-201-205
REC5GH-13440-60	5GH-13440-60	83-187
REC5GH-13440-60	5GH-13440-60	65-66-67-68-69-83
REC5W40U3		84
REC5W40U6		84

REF	R.O. / OEM	
REC60E-81950-00	60E-81950-00	115
REC60H-12416-00	60H-12416-00	245-247
REC60H-12416-00	6G5-12416-00	209-211
REC60V-11181-00	60V-11181-00	249-254
REC60V-12411-00	60V-12411-00	70-137
REC60V-13621-A0	60V-13621-A0	276
REC60V-13645-00	60V-13645-00	276
REC60V-13907-00	60V-13907-00	86
REC60V-24251-01	60V-24251-01	82
REC60V-44150-00	60V-44150-00	385
REC60V-45113-02	60V-45113-02	254
REC60V-45332-00-94	60V-45332-00-94	383
REC60V-45611-00	60V-45611-00	383
REC60V-81950-00	60V-81950-00	115
REC60V-81960-05	60V-81960-00	117
REC60V-81960-05	60V-81960-01	117
REC60V-81960-05	60V-81960-02	117
REC60V-81960-05	60V-81960-03	117
REC60V-81960-05	60V-81960-04	117
REC60V-81960-05	60V-81960-05	117
REC60X-44315-A0	60X-44315-A0	339-386
REC60X-W0078-00	60X-W0078-00	153-157-386
REC61A-11181-A0	69L-11181-00	249-254
REC61A-11193-A2	61A-11193-A2	255
REC61A-11381-A0	61A-11381-A0	276
REC61A-11650-00	61A-11650-00	261
REC61A-12414-A0	61A-12414-A0	138-231
REC61A-12414-A0	6J8-12414-A0	237
REC61A-13411-00	61A-13411-00	83
REC61A-13621-A0	61A-13621-A0	276
REC61A-13645-00	61A-13645-00	276
REC61A-13646-00	61A-13646-00	276
REC61A-24563-00	61A-24563-00	81-82
REC61A-41134-A0	6D0-41134-00	272
REC61A-44311-00	61A-44311-00	385
REC61A-44311-00	61A-44311-01	325-329-333-339-377-381-386
REC61A-44311-00	6E5-44311-00	148
REC61A-44311-00	61A-44311-00	155-156-157
REC61A-44322-02	61A-44322-02	155-156-157-325-329-333-339-377-381-386
REC61A-45113-A0	61A-45113-A0	254
REC61A-45214-10	61A-45214-10	383
REC61A-45214-10	61A-45214-11	331
REC61A-45215-10	61A-45215-10	383
REC61A-45215-10	61A-45215-11	331
REC61A-45321-01	61A-45321-01	333-385
REC61A-45331-00-94	61A-45331-00-94	333-385-386
REC61A-45376-00-94	61A-45376-00	333-339
REC61A-45376-00-94	61A-45376-00-94	341-385
REC61A-45501-20	61A-45501-20	385
REC61A-45501-30	61A-45501-30	385
REC61A-45527-00	61A-45527-00	325-329-333-377-381-385
REC61A-45538-00	61A-45538-00	325-329-333-377-381-385
REC61A-45567-00/60-0	61A-45567-00	331-337
REC61A-45577-00/60-0	61A-45577-00	331-337
REC61A-45587-00/60-0	61A-45587-00	333-339
REC61A-45587-00/60-0	61A-45587-00/60	385
REC61A-45631-03	61A-45631-03	383
REC61A-45632-00	61A-45632-00	331-337-383
REC61A-45633-00	61A-45633-00	331-337-383-392
REC61A-45634-01	61A-45634-01	331-337-341-383
REC61A-45635-00	61A-45635-00	331-335-337-341-383
REC61A-45641-02	61A-45641-02	331-337-383
REC61A-81941-00	61A-81941-00	114
REC61A-81941-00	6E5-81941-11	114
REC61A-81941-00	61A-81941-00	110
REC61A-81950-01	61A-81950-00	115
REC61A-81950-01	61A-81950-01	115
REC61A-81960-04	61A-81960-00	117
REC61A-81960-04	61A-81960-01	117
REC61A-81960-04	61A-81960-02	117
REC61A-81960-04	61A-81960-03	117
REC61A-81960-04	61A-81960-04	117
REC61A-W0001-01	61A-W0001-A1	252-254
REC61A-W0078-A1	61A-W0078-01	153
REC61A-W0078-A1	61A-W0078-A1	328-383
REC61A-W0078-A1	61A-W0078-A3	71-72-155-157-333
REC61A-W0093-01	61A-W0093-01	97
REC61B-82510-02	61B-82510-01	113
REC61N-11181-00	61N-11181-A1	229
REC61N-11181-00	61N-11181-A2	248-254
REC61N-11515-00	61N-11515-00	229
REC61N-11603-00	61N-11603-00	229-263-266
REC61N-11604-00	61N-11604-00	229-263
REC61N-11605-00	61N-11605-00	229-263
REC61N-11631-00K	61N-11631-00-95	229-263-266
REC61N-11635-00K	61N-11635-00	229-263
REC61N-11636-00K	61N-11636-00	229-263
REC61N-14198-00	61N-14198-00	274
REC61N-14301-04	61N-14301-04	91-93
REC61N-14392-00	62Y-14392-00	93-98
REC61N-24563-10	61N-24563-00	80-81
REC61N-24563-10	61N-24563-10	80-82
REC61N-24563-10	61N-24563-10	65-66-68-69-81

REF	R.O. / OEM	
REC61N-26311-00	61N-26311-00	130
REC61N-44146-00	61N-44146-00	361
REC61N-44322-00	61N-44322-01	154-155-297-355
REC61N-44323-00	61N-44323-00	149-154-155-297-355
REC61N-45510-00	61N-45510-00	355-388-389
REC61N-45510-10	61N-45510-10	355-388-389
REC61N-45551-00	61N-45551-00	355-388-389
REC61N-45560-10	61N-45560-00	295
REC61N-45560-10	61N-45560-10	355-388-389
REC61N-45570-00	61N-45571-00	355-388-389
REC61N-85540-00	61N-85540-00	119
REC61N-85570-01	61N-85570-00	105
REC61N-85570-01	61N-85570-01	105
REC61N-W0001-E1	61N-W0001-E1	145-354
REC61N-W0078-11	61N-W0078-10	150
REC61N-W0078-11	61N-W0078-11	65-66-150-154-155-297-354
REC61N-W0093-00	61N-W0093-00	93-96-229
REC61T-11193-A0	61T-11193-A1	229-255
REC61T-45113-A0	61T-45113-A0	253
REC61T-45113-A0	689-45113-A1	229
REC61T-45113-A0	61T-45113-A0	254
REC61T-W0001-02	61T-W0001-02	229-250-254-266-267
REC624-14485-00	624-14485-00	221-225-227-231-233-237-239-241-243
REC624-42542-00	90387-06119	98
REC626-14390-90	626-14390-90	98
REC626-44365-01	626-44365-01	349-353
REC626-45316-09	626-45316-09	291-292-349
REC626-45316-09	90381-14020	351
REC62Y-15312-00	62Y-15312-00	271
REC62Y-41133-00	62Y-41113-00	268
REC62Y-45127-00	62Y-45127-00	268
REC62Y-46241-00	62Y-46241-00	207-267
REC62Y-W0001-22	62Y-W0001-20	146
REC62Y-W0001-22	62Y-W0001-21	146
REC62Y-W0001-22	62Y-W0001-22	146-306
REC634-11633-00	634-11633-00	227-260-262
REC63D-11181-A1	63D-11181-A2	237-248-254
REC63D-11193-A0	63D-11193-A0	237-255
REC63D-11603-00	63D-11603-00	237-263
REC63D-11605-00	63D-11605-00	237-263
REC63D-44311-01	63D-44311-00	148-156-309-313
REC63D-44312-00	63D-44312-00	301-305-309-313-317-361
REC63D-44316-00	63D-44316-00	301-305-309-313-361
REC63D-44322-00	63D-44322-00	154-156-301-305-309-313-317-361
REC63D-44323-00	63D-44323-00	305-309-313
REC63D-44323-00	63D-44323-00-00	149
REC63D-44323-00	63D-44323-00	154-156
REC63D-44341-00	63D-44341-00	301-309-361
REC63D-45114-A0	63D-45114-A0	272
REC63D-45123-00	63D-45123-00	269
REC63D-45361-02-4D	63D-45361-02-4D	299-307-361
REC63D-45361-02-4D	63D-45361-02-8D	303-311
REC63D-45361-02-4D	63D-45361-02-8D	389-390
REC63D-85540-04	63D-85540-00	118
REC63D-85540-04	63D-85540-01	118
REC63D-85540-04	63D-85540-02	118
REC63D-85540-04	63D-85540-03	118
REC63D-85540-04	63D-85540-04	118
REC63D-W0001-00	63D-W0001-00	237-251-254
REC63D-W0078-01	63D-W0078-01	68-69-151-154-156-306-310
REC63P-11181-00	63P-11181-00	211-215-218
REC63P-11351-01	63P-11351-00	211-218
REC63P-12414-00	63P-12414-00	71-138-211
REC63P-13761-01	63P-13761-00	90
REC63P-13761-01	63P-13761-01	90
REC63P-13906-00	63P-13906-00	89-90
REC63P-13907-03	63P-13907-00	86
REC63P-13907-03	63P-13907-01	86
REC63P-13907-03	63P-13907-02	86
REC63P-13907-03	63P-13907-03	86
REC63P-13915-00	63P-13915-00	70-71-72-73-82
REC63P-14984-00	63P-14984-00	71-86-88
REC63P-15312-00	63P-15312-00	272
REC63P-41114-A3	63P-41114-A1	211
REC63P-43800-20	63P-4380003	124
REC63P-43800-20	63P-4380004	124
REC63P-43800-20	63P-4380006	124
REC63P-43800-20	63P-4380007	124
REC63P-43800-20	63P-438002D	124
REC63P-43800-20	64E-43880-02-40	124
REC63P-43800-20	68V-43880-03-40	124
REC63P-43880-22	63P-43880-10	124
REC63P-43880-22	63P-43880-11	124
REC63P-43880-22	63P-43880-12	124
REC63P-43880-22	63P-43880-22	124
REC63P-45501-00	63P-45501-00	329-333
REC63P-45501-10	63P-45501-10	329-333
REC63P-45551-00	63P-45551-00	327
REC63P-46241-00	63P-46241-00	211-267
REC63P-81950-00	63P-81950-00	115
REC63P-81960-02	63P-81960-00	116

REF	R.O. / OEM	
REC63P-81960-02	63P-81960-01	116
REC63P-81960-02	63P-81960-02	116
REC63P-82380-00	63P-82380-00	90-102
REC63V-11181-A1	63V-11181-A1	248
REC63V-11181-A1	63V-11181-A2	227-254
REC63V-11412-00	63V-11412-00	227-256
REC63V-11422-00	63V-11422-00	227-256
REC63V-11432-00	63V-11432-00	227-256
REC63V-11442-00	63V-11442-00	227-256
REC63V-11445-00	63V-11445-00	227
REC63V-11515-02	63V-11515-02	227
REC63V-14126-00	63V-14126-00	94
REC63V-14301-00	63V-14301-00	93
REC63V-14984-00	63V-14984-00	94
REC63V-14985-00	63V-14985-00	93-100
REC63V-15396-01-CA	63V-15396-01-CA	227
REC63V-24411-00	63V-24411-00	87
REC63V-41111-00-1S	63V-41111-00-1S	227
REC63V-41112-A0	63V-41112-A0	140-227
REC63V-41113-00-1S	63V-41113-00-1S	227
REC63V-41133-A1	63V-41133-A1	268
REC63V-44301-00	63V-44301-00	289-291-351
REC63V-44301-00	63V-44301-00-00	147
REC63V-44301-00	63V-44301-00	154-155
REC63V-44322-00	63V-44322-00	154-155-289-291-293-351
REC63V-44323-00	63V-44323-00	154-155-291-351
REC63V-44323-00	63V-44323-00-00	149
REC63V-44352-01	63V-44352-01	143-154-155-291-293-351
REC63V-44361-01	63V-44361-01	351
REC63V-44361-11	63V-44361-11	351
REC63V-44514-01-CA	63V-44514-01-CA	135
REC63V-45113-A1	63V-45113-A1	227-253-254
REC63V-45300-03-8D	63V-45300-00-4D	279
REC63V-45300-03-8D	63V-45300-03-4D	279
REC63V-45300-03-8D	63V-45300-03-8D	279
REC63V-45300-13-8D	63V-45300-10-4D	279
REC63V-45300-13-8D	63V-45300-13-4D	279
REC63V-45300-13-8D	63V-45300-13-8D	279
REC63V-45315-A0	63V-45315-A0	291-351
REC63V-45331-00-5B	63V-45331-00-5B	291-351
REC63V-45501-10	63V-45510-11	291-387-388
REC63V-45510-01	63V-45510-01	351-387-388
REC63V-45510-11	63V-45510-11	351-387-388
REC63V-45551-00	63V-45551-00	291-293-351-387-388
REC63V-85520-00	63V-85520-00	106
REC63V-85533-00	63V-85533-00	104
REC63V-85540-00-01	63V-85540-00	118-119
REC63V-85540-00-01	63V-85540-01	118-119
REC63V-85540-00-01	63V-85540-02	118
REC63V-85570-00	63V-85570-00	105
REC63V-85570-00	65E-85570-00	105
REC63V-85580-01	63V-85580-01	107
REC63V-W0001-00	63V-W0001-00	226
REC63V-W0001-00	63V-W0001-01	249-254
REC63V-W0001-21	63V-W0001-21	144
REC63V-W0078-01	63V-W0078-00	150
REC63V-W0078-01	63V-W0078-01	65-154-155-290-350
REC63V-W0093-00	63V-W0093-00	93-95-226
REC63W-13610-00	63W-13610-00	92-99
REC646-11633-00	646-11633-00	220
REC646-11651-02	646-11651-02	220-260
REC646-11681-00	646-11681-00	220-260
REC646-14623-A1	646-14623-A1	220-254-270
REC646-44322-00	646-44322-00	343
REC646-44323-00	646-44323-00	148-155-343
REC646-44352-01	646-44352-01	143-155-343
REC646-44365-00	646-44365-00	343
REC646-44366-01	646-44366-01	343
REC646-45551-00	646-45551-00	343-387
REC646-45560-00	646-45560-00	343-387
REC647-11610-00	647-11610-00	225-262-266
REC647-11610-10	647-11610-10	225
REC647-11610-20	647-11610-20	225
REC647-14323-00	647-14323-00	98
REC647-14385-00	647-14385-00	100
REC647-14386-10	647-14386-10	99
REC647-44366-00	647-44366-00	154-155-291-346-347-351
REC647-45316-09	647-45316-09	347
REC647-45551-00	647-45551-00	347-387
REC647-45560-00	647-45560-00	347-387
REC647-45570-00	647-45570-01	347-387
REC647-45616-02	6L5-45616-02	345
REC648-11633-00	648-11633-00	237-260-261-263-264
REC648-11651-00	646-11651-00	260-261
REC648-11681-00	646-11681-00	260
REC648-13621-A0	648-13621-A1	273
REC648-13645-A0	648-13645-A0	273
REC648-14198-A0	648-14198-A0	274
REC648-14384-01-00	648-14384-01	94
REC648-14385-00	648-14385-00	100
REC648-24411-00	648-24411-00	87
REC648-24434-01	648-24434-01	88
REC648-24435-02	648-24435-02	88
REC648-44146-00	648-44146-00	134
REC648-45633-00	648-45633-00	291-295-349-351-353-355-357
REC648-45633-00	648-45633-11	293
REC648-45633-00	648-45633-11	387-388-389

REF	R.O. / OEM	
REC648-45635-00	648-45635-00	295-353-355
REC64D-11603-01	64D-11603-01	245
REC64D-11603-01	64D-11603-02	247-265-266-267
REC64D-11604-01	64D-11603-04	265
REC64D-11604-01	64D-11604-01	245-247
REC64D-11604-01	64D-11604-02	247
REC64D-11605-01	64D-11603-05	265
REC64D-11605-01	64D-11605-01	245
REC64D-11605-01	64D-11605-02	247
REC64D-11631-00K	64D-11631-02-90	247-265-267
REC64D-11642-00K	64D-11642-02-90	247-265-267
REC64D-14384-1	64D-14384-01	94
REC64D-14394-00	64D-14394-00	99
REC64D-W0093-00	64D-W0093-00	97-247
REC64E-13645-A0	64E-13645-A0	276
REC64E-43821-05	64E-43821-00	125
REC64E-43822-00	64E-43822-00	125
REC64E-4384J-00	64E-4384J-00	125
REC64J-24560-10	64J-24560-00	80
REC64J-24560-10	64J-24560-10	80
REC64J-W0001-20	69J-W0001-20	145-146
REC64J-W0001-21	64J-W0001-21	146-333
REC650-11370-00	650-11370-00	231
REC650-11370-00	650-11370-01	225-235-237-239-241-243
REC650-11651-04	650-11651-00	227-260
REC650-14485-03	650-14485-03	227
REC650-24351-51	650-24351-00	75
REC650-24351-51	650-24351-01	75
REC650-24351-51	650-24351-50	75
REC650-24351-51	650-24351-51	75
REC650-24431-A0	650-24431-A0	88
REC650-44147-00	650-44147-00	134-363-367
REC650-45635-00	650-45635-00	291-293-349-351
REC655-12414-A1	655-12414-A1	138-229
REC65L-13645-00	65L-13645-00	275
REC65L-13646-00	65L-13646-00	275
REC65L-13915-00	665L-13915-00	82
REC65L-24563-00	65L-24563-00	71-72-81-82
REC65N-45321-00	65N-45321-00	335
REC65N-W0078-A1	65N-W0078-A1	152-157
REC65W-46241-00	65W-46241-00	193-199-267
REC65W-82575-01	65W-82575-01	120
REC65W-W0001-00	65W-W0001-00	217
REC65W-W0001-00	65W-W0001-02	190
REC65W-W0001-00	65W-W0001-02	218
REC65W-W0001-20	65W-W0001-20	145-297
REC662-44352-01	662-44352-01	143-347
REC663-11193-00	663-11193-A0	239-255
REC663-11411-00	663-11411-01	239-256
REC663-11561-00	663-11561-00	239
REC663-11633-00	663-11633-00	239-243-260-261-264
REC663-11634-00	633-11634-00	233-263
REC663-11634-00	663-11634-00	235-263
REC663-12414-00	663-12414-A0	138-239
REC663-12416-00	663-12416-00	235-239
REC663-13621-00	663-13621-A0	275
REC663-14198-00	663-14198-A0	275
REC663-14483-A0	663-14483-A0	275
REC663-14548-00	663-14548-00	99
REC663-14923-00	663-14923-00	99
REC663-24411-00	663-24411-00	87
REC663-41114-00	663-41114-A0	142-239
REC663-42138-00	663-42138-00	129
REC663-43118-01-4D	663-43118-01-4D	134
REC663-44144-01	663-44144-01	369-371
REC663-44151-00	663-44151-00	369-371
REC663-44311-02	663-44311-02	359-369
REC663-44311-02	663-44311-02-00	147
REC663-44311-02	663-44341-00	369
REC663-44311-02	6J8-44311-00	357
REC663-44311-02	663-44311-02	155-156
REC663-44315-A0	663-44315-A0	155-156- 357-359-369
REC663-44316-A0	663-44316-A0	357-359-369
REC663-44322-00	663-44322-00	154-155-156-357-359-369
REC663-44323-00	663-44323-00	149-155-156-357-359-369
REC663-44324-00	663-44324-A0	357-359-369
REC663-44366-00	663-44366-00	301-305-309-313-317-321-333-357-359-361-363-367-369-371-373-385
REC663-44366-00	663-44366-00	154-155-156
REC663-44551-02-8D	663-44551-02-8D	135
REC663-45123-00	663-45123-00	268
REC663-45331-00-94	663-45331-00-94	369-390
REC663-45375-00	663-45375-00	367
REC663-45376-00	663-45376-00	305-325-335-367
REC663-45376-00	663-45376-00-94	301-309-313-317-321-329
REC663-45510-01	663-45510-01	369-390
REC663-45552-00	663-45552-00	359-365-369
REC663-45576-00	663-455576-00	365
REC663-45631-00	663-45631-01	359-363-365-369-389-390
REC663-45633-00	663-45633-00	359-361-363-365-369-389-390

REF	R.O. / OEM	
REC663-45634-00	663-45634-00	303-307-311-359-363-365-369
REC663-45987-00	663-45987-00	365
REC663-45987-00	663-45987-02	299-303-307-311-359-361-369
REC663-45987-00	663-45987-02	405
REC663-48344-00	663-48344-00	127
REC663-85518-00	633-85518-00	133
REC663-85540-15	663-85540-11	119
REC663-85540-15	663-85540-15	119
REC663-W0078-01	663-W0078-00	368
REC663-W0078-01	663-W0078-01	152-368
REC663-W0078-01	663-W0078-A0	151
REC663-W0078-01	663-W0078-A0	156
REC664-41114-A0	664-41114-A0	140
REC664-41134-A0	664-41134-A0	268
REC664-44338-00	63V-44338-00	351
REC664-44338-00	664-44338-00	289-291-293-353
REC664-44338-00	664-44338-00	154-155
REC664-45384-00	664-45384-00	353-357
REC664-45631-00	664-45631-02	355-388-389
REC664-45631-01	664-45631-01	353
REC664-45987-00	664-45987-00	353
REC66K-13907-00	66K-13907-00	86
REC66K-13915-00	66K-13915-00	82
REC66K-14984-00	66K-14984-00	86-88
REC66K-45501-00	66K-45501-00	385
REC66M-46241-00	66M-46241-00	185-267
REC66M-W0001-01	66M-W0001-01	182-216-218
REC66M-W0001-20	66M-W0001-20	144-290
REC66M-W0093-01	66M-W0093-01	95-182
REC66N-11603-00	66N-11603-00	183-219
REC66T-11181-00	66T-11181-A0	249
REC66T-11181-00	66T-11181-A2	233-254
REC66T-11193-A0	66T-11193-A0	233-255
REC66T-11412-00	66T-11412-00	233-256
REC66T-11422-00	66T-11422-00	233-256
REC66T-11432-00	66T-11432-00	233-256
REC66T-11442-00	66T-11442-00	233-256
REC66T-11603-00	66T-11603-00	233-263-266
REC66T-11604-00	66T-11604-00	233-263
REC66T-11605-00	66T-11605-00	233-263
REC66T-11631-01K	66T-11631-01-93	233-263-266
REC66T-11635-01K	66T-11635-01	233-263
REC66T-11636-01K	66T-11636-01	233-263
REC66T-11681-00	66T-11681-00	233-260-261
REC66T-14301-60	66T-14301-60	92-93
REC66T-14384-01	66T-14384-01	94
REC66T-14536-01	66T-14536-01	94
REC66T-14992-00	66T-14992-00	99
REC66T-15713-00	66T-15713-00	112
REC66T-15713-00	6F5-15713-00	112
REC66T-15713-00	6F5-15713-01	112
REC66T-26301-00	66T-26301-00	130
REC66T-41114-A0	667-41114-A0	233
REC66T-41114-A0	66T-41114-A0	141
REC66T-41133-A1	66T-41133-A0	269
REC66T-44323-00	66T-44323-00	149-154-301-361
REC66T-44514-00-4D	66T-44514-00-4D	135
REC66T-45113-A0	66T-45113-A0	233-253-254
REC66T-45114-A0	66T-45114-A0	271
REC66T-45501-01	66T-45501-01	361-389
REC66T-45501-10	66T-45501-11	361-389-390
REC66T-45551-00	667-45551-00	303
REC66T-45551-00	66T-45551-00	299-361-389-390
REC66T-45560-00	66T-45560-01	299-303-361-389-390
REC66T-45571-00	667-45571-00	303
REC66T-45571-00	66T-45571-00	299-361-389-390
REC66T-45611-00	66T-45611-00	299-361-389-390
REC66T-45631-00	66T-45631-00	299-361-389-390
REC66T-45635-00	66T-45635-00	299-361
REC66T-45997-00	667-45997-00	303-307-311
REC66T-45997-00	66T-45997-00	299-361-365-405
REC66T-82575-01	66T-82575-01	120
REC66T-85520-00	66T-85520-00	106
REC66T-85533-00	66T-85533-00	104
REC66T-85540-00-01	66T-85540-01	119
REC66T-85570-00	66T-85570-00	105
REC66T-85580-00	66T-85580-00	107
REC66T-W0001-01	66T-W0001-01	233-250-254
REC66T-W0001-20	66T-W0001-20	146-361
REC66T-W0078-00	66T-W0078-00	298-361
REC66T-W0078-00	66T-W0078-01	66-67-152-154
REC66T-W0093-01	66T-W0093-01	93-96-233
REC670-44514-00	670-44514-00	135
REC670-44555-00-94	62Y-44555-00	135
REC670-45997-00	670-45997-02	359-369
REC676-11181-01	676-11181-A2	249-254
REC676-12414-A0	676-12414-A0	233
REC676-12414-A0	676-12414-A1	138
REC676-13646-A0	676-13646-A0	274
REC676-14186-00	676-14186-00	99
REC676-14966-00	679-14966-00	100
REC676-14984-00-00	676-14984-00	94
REC676-14985-01	676-14985-01	100
REC676-41112-A0	676-41112-A0	142

REF	R.O. / OEM	
REC676-41133-A0	676-41133-A0	269
REC676-43160-02	676-43160-00	132
REC676-43160-02	676-43160-01	132
REC676-43160-02	676-43160-02	132
REC676-44311-00	676-44311-00	148-156-363-367
REC676-44315-00	676-44315-A0	367
REC676-44315-00	676-44315-A1	156-363
REC676-44316-A1	676-44316-A1	363
REC676-44322-00	676-44322-00	156-367
REC676-44323-00-40	676-44323-00	149-156-367-363
REC676-44324-A0	676-44324-A0	367
REC676-44324-A0	676-44324-A1	363
REC676-44341-00	676-44341-94	363
REC676-44361-00	676-44361-00	367
REC676-44361-10	676-44361-10	367
REC676-44518-00	676-44518-00	135
REC676-45114-A1	676-45114-A1	271
REC676-45127-00	676-45127-00	269
REC676-45128-00	676-45128-00	269
REC676-45314-00	676-45314-00	363
REC676-45361-00	676-45361-01-94	363-390
REC676-45501-10	676-45501-10	363-389-390
REC676-45533-00	676-45533-00	363
REC676-45587-00	676-45587-00-70	363
REC676-45587-00-75	676-45587-00-75	363
REC676-45587-00-80	676-45587-00-80	363
REC676-45635-00	676-45635-00	359-363-365
REC677-11181-A0	677-11181-A1	225-248-254
REC677-11412-02	677-11412-02	225-256
REC677-11422-02	677-11422-02	225-256
REC677-11432-02	677-11432-02	225-256
REC677-11442-02	677-11442-02	225-256
REC677-11631-00K	677-11631-00-97	225-262-266
REC677-11635-00K	677-11635-00	225-262
REC677-11636-00K	677-11636-00	225-262
REC677-11651-00	677-11650-01	260
REC677-13621-00	677-13621-A1	273
REC677-14198-A1	677-14198-A1	273
REC677-14227-00	677-14227-01	94
REC677-14343-68	677-14343-68	98
REC677-14384-01	677-14384-01	94
REC677-24434-02	677-24434-02	273
REC677-24435-01	677-24435-01	87
REC677-24471-01	677-24471-01	87
REC677-26301-02	677-26301-02	130
REC677-41112-A0	677-41112-A1	225
REC677-41112-A0	677-41114-A0	140
REC677-41112-A0	677-41114-A1	225-389
REC677-45113-A0	677-45113-A0	225-252-254
REC677-W0093-00	677-W0093-00	95-225
REC679-14923-00	679-14923-00	99
REC679-44150-00	679-44150-00	367
REC679-44150-10	679-44150-10	367
REC679-44152-00	679-44152-00	367
REC679-44316-A0	679-44316-A0	367
REC679-44341-00	679-44341-00-94	367
REC679-44514-00-94	679-44514-00-94	135
REC679-45315-A1	679-45315-A1	365
REC679-45321-02	679-45321-02	365
REC679-45331-00	679-45331-00-94	365
REC679-45501-10	679-45501-10	367-389
REC679-45536-00	679-45536-00	367
REC679-45560-00	679-45560-00	365-389
REC679-45571-00	679-45571-00	365
REC679-45611-00	679-45611-01	359-365-389-390
REC679-W0078-A1	679-W0078-00	151-156
REC67C-11181-01	67C-11181-01	197-215-218
REC67C-11351-00	67C-11351-01	197-207-218
REC67C-11356-00	67C-11356-00	197
REC67C-11603-00	67C-11603-00	193-195-199-201-203-205-219
REC67C-15312-00	67C-15312-00	271
REC67C-41114-00	67C-41114-00	141
REC67C-41114-00	67C-41114-10	197
REC67C-41133-00	67C-41133-00	268
REC67C-43880-01	67C-43880-00	122
REC67C-43880-01	67C-43880-01	122
REC67C-45113-00	67C-45113-00	271
REC67C-45123-00	67C-45123-00	268
REC67C-45501-00	67C-45501-00	301-305-389-390
REC67C-45501-10	67C-45501-10	301-305-389-390
REC67C-W0001-01	67C-W0001-00	217
REC67C-W0001-01	67C-W0001-01	197-217-218
REC67C-W0001-20	67C-W0001-20	298
REC67D-W0093-00	67D-W0093-00	95-177
REC67F-11181-03	67F-11181-02	209
REC67F-11181-03	67F-11181-03	215-218
REC67F-11328-00	67F-11328-00	209-211-214
REC67F-11416-00	67F11416-00	209
REC67F-11416-10	67F11416-10	209
REC67F-11416-20	67F11416-20	209
REC67F-12411-01	67F-12411-00	137
REC67F-12411-01	67F-12411-01	69-70-71-72-73-137-209-211-213
REC67F-14371-01	67F-14371-01	101
REC67F-41114-A2	6D8-41114-A0	209
REC67F-41134-A0	67F-41134-A0	269
REC67F-41138-00	67F-41138-00	269
REC67F-44311-01	67F-44311-00	321
REC67F-44311-01	67F-44311-01-00	148-154-155
REC67F-44322-00	67F-44322-00	321-154-155
REC67F-44323-00	67F-44323-00	149-154-155-321
REC67F-44352-00	67F-44352-00	143-321-154-155
REC67F-45113-00	67F-45113-00	272
REC67F-45123-00	67F-45123-00	269
REC67F-45127-00	67F-45127-00	269
REC67F-45331-00-CA	67F-45331-00-94	319
REC67F-45501-10	67F-45501-10	321-391
REC67F-45560-00	67F-45560-00	319-390-391
REC67F-45570-00	67F-45570-00	391
REC67F-45576-00	67F-45576-00	315-319
REC67F-45611-01	67F-45611-01	315-319-391
REC67F-45997-00	67F-45997-00	315-319-371-405
REC67F-46241-00	67F-46241-00	209-267
REC67F-81960-12	67F-81960-00	116
REC67F-85570-00	67F-85570-00	105
REC67F-W0001-00	67F-W0001-00	217
REC67F-W0001-00	67F-W0001-01	209
REC67F-W0001-00	67F-W0001-01	218
REC67F-W0001-20	67F-W0001-20	145-318
REC67F-W0078-00	67F-W0078-00	69-70-152-154-155-318
REC67F-W0093-00	67F-W0093-00	97-209
REC67H-11411-00	67H-11411-00	256
REC67H-13907-00	67H-13907-00	86
REC67H-8592A-01	67H-8592A-01	103
REC682-11351-A0	682-11351-A0	253
REC682-11412-00	682-11412-00	256
REC682-11422-00	682-11422-00	256
REC682-11432-00	682-11432-00	256
REC682-11442-00	682-11442-00	256
REC682-11610-01	682-11610-00	262
REC682-11610-01	682-11610-01	227-266
REC682-11610-11	682-11610-11	227-262
REC682-11610-21	682-11610-21	227-262
REC682-11681-00	682-11681-00	227-260
REC682-12413-00-1S	682-12413-00-1S	139-227
REC682-12413-00-1S	682-12413-00-9M	139
REC682-12414-A1	682-12414-A1	138-139-227
REC682-13621-00	682-13621-A0	273
REC682-41112-00	682-41112-A1	140
REC682-41114-00	682-41114-A1	140
REC682-41133-A0	682-41133-A0	268
REC682-41237-00	682-42137-00	133
REC682-41237-50	682-41237-50	133
REC682-44147-00	682-44147-00	349-357
REC682-44176-00	682-44176-00	349
REC682-44312-00	682-44312-00	349
REC682-44315-00	682-44315-00	154-155-156-349
REC682-44322-00	682-44322-00	154-155-156-349
REC682-44323-40	682-44323-00	154-155-156-349
REC682-44328-00	682-44328-00	349
REC682-44352-01	682-44352-00	349
REC682-44352-01	682-44352-03	143-154-155-156
REC682-44361-01	682-44361-01	349
REC682-44361-10	682-44361-10	349
REC682-44365-00	682-44365-00	154-155-156-349
REC682-44514-01-94	682-44514-01-94	135
REC682-45113-A0	682-45113-02	254-271
REC682-45376-01	682-45376-01	349
REC682-45631-00	682-45631-00	291-293-349-351-387-388
REC682-W0078-A1	682-W0078-A1	150-154-155-156-348
REC683-44362-01	683-44361-01	349
REC683-44365-01	683-44365-01	349
REC683-44373-00	683-44373-00	349
REC683-45315-A0	683-45315-00	349
REC683-45361-01-4D	683-45361-00-EJ	349
REC683-45361-01-4D	683-45361-02-4D	291-351
REC683-45361-01-4D	683-45361-02-8D	293
REC683-45361-02-4D	683-45361-02-8D	387-388
REC683-45611-00	683-45611-00	291-293-349-351-387-388
REC683-W0001-21	683-W0001-21	348
REC683-W0001-21	683-W0001-C1	144
REC688-11111-02-1S	688-11111-02-1S	243
REC688-11181-A1	688-11181-A1	243
REC688-11181-A1	688-11181-A2	249-254
REC688-11193-A1	688-11193-A1	243-255
REC688-11370-00	688-11370-01	237-241-243
REC688-11411-00	688-11411-01	243-256
REC688-11603-A0	688-11603-A0	239-243-264-266
REC688-11605-A0	688-11605-A0	239-243-264
REC688-11610-02	688-11610-02	264-266
REC688-11631-02K	688-11631-02-95	264-266
REC688-11631-03K	688-11631-03-94	239-243-264
REC688-11631-81K	688-11631-81-96	264-266
REC688-11634-00	688-11634-00	229-239-243-263-264
REC688-11634-00	688-11634-10	241
REC688-11635-03K	688-11635-03	239-264
REC688-11636-03K	688-11635-03	264
REC688-11636-03K	688-11636-03	239
REC688-11650-03	688-11650-03	239-243-264
REC688-11651-00	688-11651-00	261
REC688-12413-00-1S	688-12413-00-1S	139-243
REC688-12414-A1	688-12414-A1	138-139-243-245-247
REC688-12416-00	688-12416-00	139-243
REC688-13610-00	688-13610-00	99
REC688-13621-A1	688-13621-A1	274
REC688-14198-A1	688-14198-A2	274
REC688-14416-01	688-14416-01	274
REC688-14483-A0	688-14483-A0	274
REC688-14548-00	688-14548-00	99
REC688-14947-00	688-14947-00	98
REC688-41112-A0	688-41112-A0	142-243
REC688-41114-A0	688-41114-A0	142-243
REC688-41134-00	688-41134-A0	269
REC688-41211-01	688-41211-00	132
REC688-41211-01	688-41211-01	132
REC688-41217-00	688-41217-00	101
REC688-43160-01	688-43160-01	132
REC688-44120-12	688-44120-11	134
REC688-44120-12	688-44120-12	134
REC688-44120-22	688-44120-22	134
REC688-44311-01	688-44311-01	148-371
REC688-44311-01	688-44311-01	156
REC688-44311-01	688-44311-01-00	373
REC688-44315-00	688-44315-A0	321-371
REC688-44315-00	688-44315-A0	154-155-156
REC688-44315-00	688-44315-A0-00	373
REC688-44316-00	688-44316-00	321
REC688-44316-00	688-44316-A0	371
REC688-44316-00	688-44316-A0-00	373
REC688-44322-00	688-44322-00	156-371
REC688-44322-00	688-44322-00-00	373
REC688-44323-00	688-44323-00-00	149-373
REC688-44323-00	688-44323-00	156-371
REC688-44324-00	688-44324-A0	321-371
REC688-44324-00	688-44324-A0-00	373
REC688-44341-01	688-44341-01-94	371
REC688-44341-01	6D8-44341-01	321
REC688-44341-01	688-44341-01-94	373
REC688-44352-03	688-44352-03	143-156-371
REC688-44352-03	688-44352-03-00	373
REC688-44361-10	688-44361-10	371
REC688-44514-00	688-44514-00	135
REC688-44555-00	688-44555-00	135
REC688-45113-A0	688-45113-A0	243-253-254
REC688-45114-A1	688-45114-A1	272
REC688-45123-00	688-45123-00	269
REC688-45214-02	688-45214-02	323-365
REC688-45215-02	688-45215-02	323-365
REC688-45331-00-94	688-45331-00-94	371-373-388-390-391
REC688-45341-00	688-45341-00	295-359-375
REC688-45341-00	688-45341-00-00	373
REC688-45341-00	688-45341-10	299-303-307-311-315-319-323-327-331-335-337-341-355-361-363-369-370-379
REC688-45375-00	63D-45375-00	317-321-325
REC688-45375-00	688-45375-00	329-371
REC688-45383-01	688-45383-02	315-319-323-371-375
REC688-45383-01	688-45383-02-00	373
REC688-45384-00	688-45384-00	371-375
REC688-45384-00	688-45384-02	315-319-323
REC688-45384-00	688-45384-00-00	373
REC688-45501-10	688-45501-10	390-391
REC688-45501-11	688-45501-11	371-390-391
REC688-45536-01	688-45536-01	317-321
REC688-45551-00	688-45551-01	371-390-391
REC688-45551-00	688-45551-01-00	373
REC688-45560-00	688-45560-00	371-390-391
REC688-45560-00	688-45560-00-00	373
REC688-45570-00	688-45571-01	371
REC688-45571-00-00	688-45571-01	390-391
REC688-45611-00	688-45611-00	371-390-391
REC688-45631-00	688-45631-01	371-390-391
REC688-45633-00	688-45633-00	315-319-371-390-391
REC688-45633-00	688-45633-00-00	373
REC688-45634-00	688-45634-00	371
REC688-45635-00	688-45635-00	369-371
REC688-45987-00	688-45987-01	315-319-371-405
REC688-45987-00	688-45987-01-00	373
REC688-45997-00	688-45997-00	383
REC688-45997-00	688-45997-01	323-327-331-335-337-375-379-405
REC688-45997-00	688-45997-01-00	373
REC688-81950-10	688-81950-10	111-114
REC688-82560-10	688-82560-10	103
REC688-82575-01	688-82575-01	120
REC688-8258A	688-8258A-10	129
REC688-8258A-30	688-8258A-30	129
REC688-85510-01	688-85510-00	121
REC688-85510-01	688-85510-01	121
REC688-85510-10	688-85510-10	121
REC688-85510-10	688-85510-11	121
REC688-85540-00	688-85540-00	117
REC688-85540-16	688-85540-16	120
REC688-W0001-20	688-W0001-20	146
REC688-W0001-22	688-W0001-20-00	373
REC688-W0001-22	688-W0001-22	146-370
REC688-W0001-A0	688-W0001-02	243
REC688-W0001-A0	688-W0001-A0	251

REF	R.O. / OEM	
REC688-W0001-A0	688-W0001-A0	254
REC689-11181-00	689-11181-A2	248-254
REC689-11610-00	689-11610-01	263-266
REC689-11631-00K	689-11631-00-95	263-266
REC689-11633-00	689-11633-00	229-260-263
REC689-11651-00	689-11651-00	229-260-261
REC689-11681-00	689-11681-01	229-260-261
REC689-15396-01-CA	689-15396-01-5B	229
REC689-15755-00	689-15755-00	134
REC689-41112-A0	689-41112-A0	141
REC689-41114-A0	689-41114-A0	141
REC689-44311-00	689-44311-03	147-155-353
REC689-44315-A0	689-44315-A0	353
REC689-44316-A0	689-44316-A0	353
REC689-44323-00	689-44323-03	155-353
REC689-44324-A0	689-44324-A0	155-353
REC689-44352-02	689-44352-02	143-155-353
REC689-44366-00	689-44366-00	155-353-355
REC689-45501-10	689-45501-10	353-388-389
REC689-45551-00	689-45551-00	353-388-389
REC689-45560-00	689-45560-00	353-388-389
REC689-45571-00-00	689-45570-00	353-388-389
REC689-45611-00	689-45611-00	353-388-389
REC689-45997-00	689-45997-00	295-353-355-357-405
REC689-81311-40	66M-85570-00	105
REC689-85540-21	689-85540-20	119
REC689-85540-21	689-85540-21	119
REC689-W0001-20	689-W0001-20	145
REC689-W0001-21	689-W0001-21	145-353
REC689-W0001-C2	6689-W0001-C2	145
REC689-W0078-04	689-W0078-04	151-155
REC689-W0078-A6	689-W0078-A6	151-155-353
REC689-W0093-02	689-W0093-02	95
REC689-W4432-01	689-W4432-02	155-156-353
REC68D-E1603-00	68D-E1603-00	175-219
REC68F-11181-00	68F-11181-00	249-254
REC68F-11193-02	68F-11193-02	255
REC68F-11381-00	68F-11381-00	276
REC68F-13440-00	68F-13440-00	83
REC68F-13907-01	68F-13907-01	86
REC68F-13915-00	68F-13915-00	82
REC68F-24563-00	68F-24563-00	81
REC68F-24563-10	68F-24563-10	81
REC68F-41114-00	68F-41114-00	142
REC68F-45113-01	68F-45113-01	253-254
REC68F-8195A-00	68F-8195A-00	115
REC68F-83688-00	68F-83688-00	90-102
REC68F-83688-10	68F-83688-10	90-102
REC68F-8592A-00	68F-8592A-00	103
REC68F-W0001-01	68F-W0001-01	252-254
REC68T-13475-00	68T-13475-00	271
REC68T-24251-00	68T-24251-00	80-82
REC68T-24251-00	68T-24251-01	80
REC68T-24251-00	6EE-F4251-00	80
REC68T-24251-00	68T-24251-00	64-65-81
REC68T-24410-00-00	68T-24410-00	85
REC68T-24410-00-00	68T-24410-01	85
REC68T-44323-00	68T-44323-00	149-154-289-293
REC68T-44352-00	68T-44352-00	143-154-289
REC68T-44366-00	68T-44366-00	154-289
REC68T-45551-00	6N0-G5551-A0	289
REC68T-46241-00	60R-G6241-00	180
REC68T-46241-00	68T-46241-00	267
REC68T-85540-00	68T-85540-00	118
REC68T-W0001-20	68T-W0001-20	144-289
REC68T-W0078-00	68T-W0078-00	150-289
REC68T-W0078-00	68T-W0078-01	64-65-150-154
REC68V-11351-00	68V-11351-00	209-218
REC68V-12111-00	68V-12111-00	209
REC68V-13761-10	68V-13761-10	90
REC68V-13907-00	68V-13907-00	86
REC68V-13907-00	68V-13907-01	86
REC68V-13907-00	68V-13907-02	86
REC68V-13907-00	68V-13907-03	86
REC68V-13907-00	68V-13907-04	86
REC68V-13915-00	68V-13915-00	72-82
REC68V-14984-00	68V-14984-00	72-86-88
REC68V-15312-00	68V-15312-00	272
REC68V-24410-00	68V-24410-00	85
REC68V-24563-00	68V-24563-00	68-80-81-82
REC68V-44323-00	6EK-44323-00	149-155-269-325
REC68V-45123-00	68V-45123-00	269
REC68V-45501-10	68V-45501-10	325
REC68V-81950-00	68V-81950-00	115
REC68V-82380-00	68V-82380-00	90-102
REC68V-85885-00	68V-85885-00	90-102
REC68V-8A360-00	68V-13761-00	89
REC68V-8A360-00	68V-8A360-00	89-90
REC68V-W0001-20	68V-W0001-20	147-322
REC68V-W0078-00	68V-W0078-00	70-71-152-155-322
REC692-14590-01	692-14590-00	98
REC692-14590-01	692-14590-01	98
REC692-14923-00	692-14923-00	98
REC692-24410-00	692-24410-00	85
REC692-24410-00	6A0-24410-00	85
REC692-24410-00	6A0-24410-03	85
REC692-24410-00	6A0-24410-04	85
REC692-24410-00	6A0-24410-05	85
REC692-24411-00	692-24411-00	87
REC692-26301-03	692-26301-00	130
REC692-26301-03	692-26301-01	130

REF	R.O. / OEM	
REC692-26301-03	692-26301-02	130
REC692-26301-03	692-26301-03	130
REC692-41256-00	692-41256-00	101
REC692-44120-22	692-44120-21	134
REC692-44120-22	692-44120-22	134
REC692-45300-16-8D	692-45300-12-4D	280
REC692-45300-16-8D	692-45300-13-4D	280
REC692-45300-16-8D	692-45300-14-4D	280-370
REC692-W0078-02	692-W0078-00-00	373
REC692-W0078-02	692-W0078-01-00	373
REC692-W0078-02	692-W0078-00	152
REC692-W0078-02	692-W0078-01	152
REC692-W0078-02	692-W0078-02	152-156-370
REC695-11181-00	695-11181-A1	248-254
REC695-85540-11	695-85540-11	119
REC695-85540-11	695-85540-12	119
REC695-W0001-A2	695-W0001-01	250-254
REC696-14590-01	696-14590-01	98
REC696-45113-00	696-45113-00	239
REC696-45113-00	696-45113-A0	253-254
REC696-85540-12	696-85540-10	119
REC696-85540-12	696-85540-11	119
REC696-85540-12	696-85540-12	119
REC696-W0093-00	696-W0093-00	239
REC696-W0093-00	696-W0093-02	96
REC697-11181-A1	697-11181-A2	239-249-254
REC697-45114-00	697-45114-A0	254-271
REC697-45384-00	697-45384-00	359-365-369
REC697-45551-00	697-45551-00	369-390
REC697-45560-00	697-45560-00	369-390
REC697-45570-00	697-45571-00	369
REC697-45571-00-00	697-45571-00	390
REC697-45611-00	697-45611-00	369-388-390
REC697-85570-00	697-85570-00	105
REC697-85570-10	697-85570-11	105
REC697-W0001-02	697-W0001-02	239
REC697-W0001-02	697-W0001-A0	251
REC697-W0001-02	697-W0001-A0	254
REC698-W0001-21	698-W0001-21	145-368
REC69D-45501-10	69D-45501-10	390
REC69D-W0001-20	69D-W0001-20	146
REC69G-45510-10	69G-45510-10	387
REC69G-45510-20	69G-45510-20	387
REC69G-W0001-20	69G-W0001-20	144-289
REC69G-W0078-01	69G-W0078-00	150
REC69G-W0078-01	69G-W0078-01	150
REC69J-11181-03	69J-11181-03	216-218
REC69J-11182-03	69J-11182-03	216-218
REC69J-11351-11	69J-11351-11	213-218
REC69J-12111-00	69J-12111-00	211
REC69J-12119-00	69J-12119-00	211
REC69J-13645-00	69J-13645-A1	273
REC69J-13761-00	69J-13761-00	90
REC69J-13906-00	69J-13906-00	89-90
REC69J-13907-03	69J-13907-00	86
REC69J-13907-03	69J-13907-01	86
REC69J-13907-03	69J-13907-02	86
REC69J-13907-03	69J-13907-03	86
REC69J-13907-03	69J-13907-04	86
REC69J-15451-00	69J-15451-00	213
REC69J-15451-00	69J-15451-A1	273
REC69J-24410-02	69J-24410-00	86
REC69J-24410-02	69J-24410-01	86
REC69J-24410-02	69J-24410-02	86
REC69J-24501-10	69J-24501-10	71-72-81
REC69J-24502-00	69J-24502-00	81
REC69J-41134-A0	69J-41134-A0	270
REC69J-41135-A0	69J-41135-A0	270
REC69J-41138-00	69J-41138-00	270
REC69J-45123-00	69J-45123-00	270
REC69J-45361-00-8D	69J-45361-00-8D	331-383
REC69J-45375-00	69J-45375-00	331-383
REC69J-45611-00	69J-45611-00	331-337-392
REC69J-45631-00	69J-45631-00	331-337-392
REC69J-46241-00	69J-46241-00	267
REC69J-81960-13	69J-81960-10	116
REC69J-81960-13	69J-81960-11	116
REC69J-81960-13	69J-81960-12	116
REC69J-81960-13	69J-81960-13	116
REC69J-85885-00	69J-85885-00	90-102
REC69J-W0001-20-00	69J-W0001-20	147
REC69K-45611-00	69K-45611-00	331-337
REC69L-11631-00K	69L-11635-00-85	267
REC69L-11642-00	69L-11642-00-85	267
REC69M-E1603-01	69M-E1603-01	173-219
REC69P-85541-09	69P-85541-09	107
REC69W-82575-00	69W-82575-00	120
REC6A0-14325-00	6A0-14325-00	99
REC6A0-24410-04	6A0-24410-00	85
REC6A0-24410-04	6A0-24410-01	85
REC6A0-24410-04	6A0-24410-02	85
REC6A0-24410-04	6A0-24410-03	85
REC6A0-24410-04	6A0-24410-04	85
REC6A0-82550-01	6A0-82550-01	120
REC6A0-W0001-21	6A0-W0001-21	146
REC6A1-14301-03	6A1-14301-03	92-93
REC6A1-14613-A0	6A1-14613-00	270
REC6A1-14613-A0	6A1-14613-01	270
REC6A1-14613-A0	6A1-14613-A0	220-270
REC6A1-44325-00	6A1-44325-00P	343
REC6A1-44361-00	6A1-44361-00	343
REC6A1-85540-01	6A1-85540-00	118
REC6A1-85540-01	6A1-85540-01	118
REC6A1-85570-00	6A1-85570-00	105
REC6A1-W0001-22	6A1-W0001-22	144

REF	R.O. / OEM	
REC6A1-W0001-23	6A1-W0001-23	144-343
REC6A1-W0078-01	6A1-W0078-01	150-155-343
REC6A1-W0093-01	6A1-W0093-01	93-95
REC6AG-11181-00	6AG-11181-00	215
REC6AG-11181-00	6AG-11181-10	187-218
REC6AH-11351-00	6AH-11351-10	187-218
REC6AH-12411-00	69M-12411-00	136
REC6AH-12411-00	69M-12411-01	136-173-175
REC6AH-12411-00	6AH-12411-00	136-187
REC6AH-12411-00	6G8-12411-00	181
REC6AH-12411-00	6AH-12411-00	65-137
REC6AH-13329-00	6AH-13329-00	271
REC6AH-15312-00	6AH-15312-00	271
REC6AH-W0078-00	6AH-W0078-00	150-153-292
REC6AH-W0078-00	6AH-W0078-01	150-292
REC6AH-W0078-00	6AH-W0078-01	65-154
REC6AW-11181-00	6AW-11181-00	214-216-218
REC6AW-11182-00	6AW-11182-00	214-216-218
REC6AW-11351-00	6AW-11351-00	214-218
REC6AW-12411-00	6AW-12411-00	73-137-214
REC6AW-13907-00	6AW-13907-00	86
REC6AW-13907-00	6P2-13907-00	86
REC6AW-14613-00	6AW-14613-00	272
REC6AW-14623-00	6AW-14623-00	272
REC6AW-14984-00	65L-13907-00	86
REC6AW-14984-00	66K-13907-00	86
REC6AW-14984-00	67H-13907-00	86
REC6AW-14984-00	6AW-14984-00	73-88
REC6AW-15312-00	6AW-15312-00	272
REC6AW-15451-00	6AW-15451-00	214-272
REC6AW-41134-01	6AW-41134-00	270
REC6AW-43880-02	6AW-43880-00	123
REC6AW-43880-02	6AW-43880-01	123
REC6AW-43880-02	6AW-43880-02	123
REC6AW-44311-01	6AW-44311-00	148-341
REC6AW-44311-01	6AW-44311-01	148
REC6AW-44312-00	6AW-44312-00	335-341
REC6AW-44315-00	6AW-44315-00	341
REC6AW-44322-00	6AW-44322-00	335-341
REC6AW-44323-00	6AW-44323-00	341
REC6AW-44336-00	6AW-44336-00	341
REC6AW-44352-00	6AW-44352-00	143-341
REC6AW-44365-00	6AW-44365-00	335-341
REC6AW-45113-00	6AW-45113-00	272
REC6AW-81800-00	6W-81800-00	112
REC6AW-8194A-00	6AW-8194A-00	115
REC6AW-81950-00	6AW-81950-00	115
REC6AW-W0078-00	6AW-W0078-00	73-153-155-341
REC6B4-11193-A0	6B4-11193-A0	140
REC6B4-11351-A1	6B4-11351-A1	252
REC6B4-14301-00	6B4-14301-00	91-93
REC6B4-26301-00	6B4-26301-00	130
REC6B4-85520-00	6B4-85520-00	107
REC6B4-85540-01	6B4-85540-01	120
REC6B4-85570-01	6B4-85570-00	104
REC6B4-85570-01	6B4-85570-01	104
REC6B4-85580-00	6B4-85580-00	107
REC6BG-11181-00	6BG-11181-00	201-215-218
REC6BG-13761-00	6BG-13761-00	89-90
REC6BG-13915-00	6BG-13915-00	67-80
REC6BG-W0078-00	6BG-W0078-00	67-151-153-154-302
REC6BL-11181-00	6BL-11181-00	195-215-218
REC6C5-13761-00	6C5-13761-00	89-90
REC6C5-13915-00	6C5-13915-00	68-69-70-81
REC6C5-14984-00	6C5-14984-00	68-69-86-88
REC6C5-24251-00	6C5-24251-00	67-68-69-70-80
REC6C5-24410-00	6C5-24410-00	85
REC6C5-46241-00	6C5-46241-00	195-201-203-205-267
REC6C5-85885-00	6C5-85885-00	90-102
REC6CB-11181-00	6CB-11181-00	216-218
REC6CB-13016-00	6CB-13016-00	70-71-72-73-88
REC6CB-14984-00	6CB-14984-00	70-71-72-73-88
REC6CB-24501-01	6CB-24501-01	70-72-73
REC6CB-45611-00	6CB-45611-00	335
REC6CB-82310-00	6CB-82310-00	106
REC6CE-12411-00	6CE-12411-00	73-137
REC6CE-44311-01	6CE-44311-00	148
REC6CE-44311-01	6CE-44311-01	148-335
REC6CE-44315-00	6CE-44315-00	335
REC6CE-44323-01	6CE-44323-01	335
REC6CE-44352-00	6CE-44352-00	143
REC6CE-44352-00	6CE-44352-01	155-335
REC6CE-81800-01	6CE-81800-00/01	112
REC6CE-81800-01	6CB-81800-00/01	112
REC6CE-W0078-01	6CE-W0078-00	153
REC6CE-W0078-01	6CE-W0078-01	73-153-334
REC6CJ-11181-00	6CJ-11181-00	205-215-218
REC6CJ-44323-00	6CJ-44323-00	317
REC6CJ-44324-00	6CJ-44324-00	317
REC6CJ-W0078-00	6CJ-W0078-00	69-151-153-154-314
REC6D0-11181-00	6D0-11181-00	249-254
REC6D0-44362-01	6D0-44362-01	335-339
REC6D0-44367-00	6D0-44367-00	335-339
REC6D0-45332-00-CA	6D0-45332-00-CA	337
REC6D0-45361-00-8D	6D0-45361-00-8D	337
REC6D0-W0001-00	6D0-W0001-00	252-254
REC6D8-11603-10	6D8-11603-01	209
REC6D8-11604-10	6D8-11604-01	209

REF	R.O. / OEM	
REC6D8-12111-00	6D8-12111-00	209
REC6D8-12121-10	6D8-12121-10	209
REC6D8-13761-00	6D8-13761-00	89-90
REC6D8-82310-00	6D8-24560-08/09	80-81
REC6D8-82310-00	68V-24560-00/01	80-81
REC6D8-43880-09	6D8-43880-00	123
REC6D8-43880-09	6D8-43880-09	123
REC6D8-WS24A-00	6D8-24563-00	80
REC6D8-WS24A-00	6D8-WS24A-00	66-67-68-69-70-71-80-81
REC6D9-12411-00	6D9-12411-00	70-137
REC6D9-45551-00	6D9-45551-00	319
REC6DA-11181-00	6DA-11181-00	216-218
REC6DA-12411-01	6DA-12411-01	72-136-137
REC6DA-13761-00	6DA-13761-00	90
REC6E0-11193-A1	6E0-11193-A1	221
REC6E0-11631-00-98K	6E0-11631-00-98	221-262-266
REC6E0-11651-01	6E0-11651-01	221-225-260
REC6E0-24411-00	6E0-24411-00	87
REC6E0-24434-00	6G1-24431-01	87
REC6E0-24435-00	6E0-24435-00	87
REC6E0-24471-00	6E0-24471-00	87
REC6E0-26301-01	6E0-26301-01	130
REC6E0-41112-A1	6E0-41112-A1	140-21
REC6E0-41114-A1	6E0-41114-A1	140-221
REC6E0-43118-01	6E0-43118-00	134
REC6E0-43118-01	6E0-43118-01	134
REC6E0-44322-02	6E0-44322-02	154-155-345
REC6E0-44352-00	6E0-44352-00	143-154-155-287-345
REC6E0-45113-A1	6E0-45113-A1	221-252
REC6E0-45316-00	6E0-45316-09	345
REC6E0-45317-00	6E0-45317-09	345
REC6E0-45511-01	6E0-45511-01	345-387
REC6E0-45511-11	6E0-45511-11	345-387
REC6E0-45551-00	6E0-45551-00	345-387
REC6E0-45560-00	6E0-45560-00	345-387
REC6E0-45570-00	6E0-45570-00	345-387
REC6E0-45611-01	6E0-45611-01	345
REC6E0-45631-00	6E0-45631-00	345-387
REC6E0-85540-71	6E0-85540-70	119
REC6E0-85540-71	6E0-85540-71	119
REC6E0-85570-00	6E0-85570-00	104
REC6E0-W0001-C1	6E0-W0001-C1	144-285-345
REC6E0-W0078-A2	6E0-W0078-00	150-153
REC6E0-W0078-A2	6E0-W0078-01	150-153
REC6E0-W0078-A2	6E0-W0078-02	150-153
REC6E0-W0078-A2	6E0-W0078-A2	150-153-155-285-345
REC6E3-14301-05	6E3-14301-05	92-93
REC6E5-11181-A0	6E5-11181-A2	245-249-254
REC6E5-11193-A0	6E5-11193-A0	245-255
REC6E5-11381-A1	6E5-11381-A1	275
REC6E5-11381-A1	6E5-11381-A2	245-247
REC6E5-11411-00	6E5-11411-00	256
REC6E5-11447-00	6E5-11447-00	245-247
REC6E5-11610-02	6E5-11610-02	265-266-267
REC6E5-11633-00	6E5-11633-01	261-265
REC6E5-11634-00	6E5-11634-00	265
REC6E5-11650-01	6E5-11650-01	261
REC6E5-11651-00	6E5-11651-00	261
REC6E5-12411-02	6E5-12411-00	136
REC6E5-12411-02	6E5-12411-01	136-221-223-229-231-233
REC6E5-12411-02	6E5-12411-02	136-137
REC6E5-12411-30	688-12411-10	243
REC6E5-12411-30	6E5-12411-10	137
REC6E5-12411-30	6E5-12411-20	137
REC6E5-12411-30	6E5-12411-30	137-227-237-245-247
REC6E5-12411-30	6E5-12411-30	137
REC6E5-13411-00	6E5-13411-00	83
REC6E5-13621-A1	6E5-13621-A1	275
REC6E5-13645-A1-00	6E5-13645-A1	275
REC6E5-14198-A2	6E5-14198-A2	275
REC6E5-14323-03	6E5-14323-03	99
REC6E5-14328-01	6E5-14328-01	99
REC6E5-14385-02	6E5-14385-02	93-100
REC6E5-14386-01	6E5-14386-01	99
REC6E5-14386-02	6E5-14386-02	99
REC6E5-14416-A1	6E5-14416-A1	275
REC6E5-14483-A1	6E5-14483-A1	275
REC6E5-14546-00	6E5-14546-00	93-98
REC6E5-24351-51	6E5-24351-00	75
REC6E5-24351-51	6E5-24351-51	75
REC6E5-24410-03	6E5-24410-01-00	85
REC6E5-24411-00	6E5-24411-00-00	87
REC6E5-24434-02	6E5-24434-02	88
REC6E5-24435-00	6E5-24435-00	88
REC6E5-24471-00	6E5-24471-00	87
REC6E5-41112-A1	6E5-41112-A1	142-245
REC6E5-41134-A0	6E5-41134-A0	269-270
REC6E5-44150-02	6E5-44150-01	377
REC6E5-44311-00	6E5-44311-00	155-156-157-381
REC6E5-44312-00	6E5-44312-00	325-329-333-339-385-386
REC6E5-44315-A0	6E5-44315-A0	156-157-325-329-333-377-381-385
REC6E5-44322-00	6E5-44322-00	156-157-381
REC6E5-44323-00-40	6E5-44323-00	149-155-156-157-377
REC6E5-44352-01	6E5-44352-01	143-155-156-157-325-329-333-339-377-381-385-386
REC6E5-44365-00	6E5-44365-00	155-157-325-329-333-339-377-381-385-386
REC6E5-44366-00	6E5-44366-00	155-156-157-325-333-339-377-381
REC6E5-45113-A2	6E5-45113-A0	253-254
REC6E5-45114-00	6E5-45114-A0	272
REC6E5-45321-00	6E5-45321-00	325-329-377-381
REC6E5-45331-00-94	6E5-45331-00-94	377-381
REC6E5-45331-00-94	6E5-45331-00-9S	325-329-391
REC6E5-45332-00-94	6E5-45332-00-94	375
REC6E5-45332-00-94	6E5-45332-00-CA	323
REC6E5-45344-00	6E5-45344-00	325-329-333-339-377-381-385
REC6E5-45371-01	6E5-45371-01	161-169-375
REC6E5-45501-01	6E5-45501-01	377-391
REC6E5-45536-00	6E5-45536-00	325-377
REC6E5-45536-00	6E5-45536-01	329
REC6E5-45551-00	6E5-45551-02	375-391
REC6E5-45560-00	6E5-45560-01	375-391
REC6E5-45567-01	6E5-45567-01	323
REC6E5-45567-01	6E5-45567-01-60	375
REC6E5-45570-00	6E5-45571-01	375-391
REC6E5-45576-00	6E5-45576-00	323-375
REC6E5-45587-01	6E5-45587-01	325-329-377
REC6E5-45611-00	6E5-45611-00	323
REC6E5-45611-00	6E5-45611-01	375-391-392
REC6E5-45631-00	6E5-45631-01	375-391-392
REC6E5-45633-01	6E5-45633-01	323-327-335-375-379-391-392
REC6E5-45634-01	6E5-45634-01	323-327-375
REC6E5-45634-01	6E5-45634-02	327
REC6E5-45641-03	6E5-45641-02	375
REC6E5-45641-03	6E5-45641-03	327-379
REC6E5-45987-00	63P-45987-00	323-327
REC6E5-45987-00	6E5-45978-01	379
REC6E5-45987-00	6E5-45987-01	375
REC6E5-45987-00	6E5-45987-01	405
REC6E5-81900-01	6E5-81900-01	84
REC6E5-85510-11	6E5-85510-10	121
REC6E5-85510-11	6E5-85510-11	121
REC6E5-85540-12	6E5-85540-10	119
REC6E5-85540-12	6E5-85540-11	119
REC6E5-85540-12	6E5-85540-12	119
REC6E5-85570-11	6E5-85570-10	105
REC6E5-85570-11	6E5-85570-11	105
REC6E5-W0001-A2	6E5-W0001-A2	251
REC6E5-W0001-A2	6N6-W0001-A3	245
REC6E5-W0001-A2	6E5-W0001-A2	254
REC6E5-W0001-F1	6E5-W0001-F1	147-374-378
REC6E5-W0001-F1	6F3-W0001-21	147
REC6E5-W0093-06	6E5-W0093-06	97-245
REC6E5-W0093-07	6E5-W0093-07	97
REC6E5-W0093-08	6E5-W0093-08	97
REC6E7-11111-01-1S	6E7-11111-01-1S	227
REC6E7-11181-00	6E7-11181-A2	248-254
REC6E7-11631-00K	6E7-11631-00	262
REC6E7-11631-00K	6E7-11631-00-97	227
REC6E7-11631-00K	6E7-11631-00-97	266
REC6E7-11635-00K	6E7-11635-00	227-262
REC6E7-11636-00K	6E7-11636-00	227-262
REC6E7-14227-00	6E7-14227-00	94
REC6E7-14385-00	6E7-14385-00	93-100
REC6E7-44366-00	6E7-44366-00	349
REC6E7-45331-00-CA	6E7-45331-00-9M	349
REC6E7-45501-00	6E7-45501-00	349
REC6E7-45501-11	6E7-45501-10	349-387-388
REC6E7-45536-00	6E7-45536-00	349
REC6E7-45551-00	6E7-45551-00	348-387-388
REC6E7-45560-01	6E7-45560-00	349
REC6E7-45560-01	6E7-45560-01	291-293-351-387-388
REC6E7-45570-00	6E7-45570-00	293
REC6E7-45570-00	6E7-45571-00	291-349-351-387-388
REC6E7-45987-00	6E7-45987-00	291-349
REC6E7-45987-00	6E7-45987-01	293-351-405
REC6E7-85570-19	6E7-85570-19-00	106
REC6E7-W0001-A1	6E7-W0001-00	249
REC6E7-W0001-A1	6E7-W0001-A1	249-254
REC6E7-W0093-01	6E7-W0093-04	95
REC6E8-14390-12	6E8-14390-12	98
REC6E9-11193-A0	6E9-11193-A0	255
REC6E9-12413-00-1S	6E9-12413-00-1S	139-235
REC6E9-12414-A1	6E9-12414-A1	138-139-235
REC6E9-14198-A0	6E9-14198-A0	275
REC6E9-41114-A0	6E9-41114-A0	142
REC6E9-82575-02	6E9-82575-00	120
REC6E9-W0093-02	6E9-W0093-02	96
REC6E9-W0093-03	6E9-W0093-03	96
REC6EE-W0078-01	6BX-WG0078-00	150
REC6EE-W0078-01	6EE-W0078-00	150
REC6EE-W0078-01	6EE-W0078-01	150
REC6EK-13761-00	6EK-13761-00	90
REC6F3-W0001-04-00	6F3-W0001-A4	251
REC6F5-11181-A2	6F5-11181-A1	235
REC6F5-11181-A2	6F5-11181-A2	248-254
REC6F5-11515-00	6F5-11515-00	233-235
REC6F5-11610-00	6F5-11610-00	263
REC6F5-11610-00	6F6-11610-00	235
REC6F5-11610-10	6F5-11610-10	263
REC6F5-11610-10	6F6-11610-010	235
REC6F5-11610-20	6F5-11610-20	263
REC6F5-11610-20	6F6-11610-20	235
REC6F5-11633-00	6F5-11633-00	233-235-260-261-263
REC6F5-11651-00	6F5-11651-00	233-235-260-261
REC6F5-11681-00	6F5-11681-00	235-261
REC6F5-12411-03	6F5-12411-00	137
REC6F5-12411-03	6F5-12411-01	137
REC6F5-12411-03	6F5-12411-02	137-235-239
REC6F5-12411-03	6F5-12411-03	137
REC6F5-12411-03	6F5-12411-03	137
REC6F5-13621-A1	6F5-13621-A1	275
REC6F5-13645-A0	6F5-13645-A1	274
REC6F5-13646-A2	6F5-13646-A1	274
REC6F5-14198-A1	6F5-14198-A1	275
REC6F5-14323-00	6F5-14323-01	98
REC6F5-14384-00	6F5-14384-00	94
REC6F5-14390-21	6F5-14390-21	98
REC6F5-14398-00	6F5-14398-00	94
REC6F5-14483-00	6F5-14483-00	94
REC6F5-15396-01-5B	6F5-15396-01-5B	235
REC6F5-24563-00	6F5-24563-00	80-81-82
REC6F5-26311-00	6F5-26311-00	130
REC6F5-41111-01-1S	6F5-41111-01-1S	235
REC6F5-41112-A0	6F5-41112-A0	141-235
REC6F5-41113-A0-1S	6F5-41113-01-1S	235
REC6F5-41114-A0	6F5-41114-A0	142-235
REC6F5-44352-00	6F5-44352-00	143-363
REC6F5-44352-00	6F5-44352-02	156-367
REC6F5-45113-A0	6F5-45113-A0	235-253-254
REC6F5-45312-00-4D	6F5-45312-01-4D	363
REC6F5-45551-00	6F5-45551-00	363-389-390
REC6F5-45560-00	6F5-45560-00	363-389-390
REC6F5-45570-00	6F5-45570-00	363-389-390
REC6F5-85540-22	6F5-85540-22	119
REC6F5-85570-11	F5-85570-13	105
REC6F5-W0001-C0	6F5-W0001-C0	145-363
REC6F5-W0078-A0	6F5-W0078-00	151
REC6F5-W0078-A0	6F5-W0078-A0	156-363
REC6F6-11111-00-1S	6F6-11111-00-1S	235
REC6F6-11191-00-1S	6F6-11191-00-1S	235
REC6F6-11193-A1	6F6-11193-A1	235-255
REC6F6-11400-02	6F6-11400-01	235
REC6F6-11631-00K	6F6-11631-00-95	235-263
REC6F6-11635-00K	6F6-11635-00	235-263
REC6F6-11636-00K	6F6-11636-00	235-263
REC6F6-13610-00	6F6-13610-00	99
REC6F6-14301-06	6F6-14301-06	91
REC6F6-14341-00	6F6-14341-00	98
REC6F6-14385-00	6F6-14385-00	100
REC6F6-45611-00	6F6-45611-00	363-389-390
REC6F6-85530-01	6F6-85530-01	106
REC6F6-85540-01	6F6-85540-01	118
REC6F6-W0001-02	6F6-W0001-02	234-251
REC6F6-W0093-00	6F6-W0093-00	96-234
REC6F8-11181-A0	6F8-11181-A1	220-248-254
REC6FM-12411-00	6FM-12411-00	66-136-137
REC6FM-13761-00	6FM-13761-00	90
REC6FP-12411-00	6FP-12411-00	70-137
REC6G0-11412-00	69P-11412-00	229-256
REC6G0-11422-00	69P-11422-00	229-256
REC6G0-11432-00	69P-11432-00	229-256
REC6G0-11442-00	69P-11442-00	229-256
REC6G0-11681-00	6G0-11181-00	261
REC6G0-85540-11	6G0-85540-11	119
REC6G1-11193-A1	6G1-11193-A1	140-223
REC6G1-11610-00	6G1-11610-00	221-262
REC6G1-11610-00	6N0-E1603-00	223
REC6G1-11610-00	6G1-11610-00	266
REC6G1-11633-00	6G1-11633-00	221-225-260-262
REC6G1-11681-00	6G1-11681-00	221-223-225-260
REC6G1-13621-A1	6G1-13621-A1	273
REC6G1-13645-A1	6G1-13645-A1	273
REC6G1-14198-A1	6G1-14198-A1	273
REC6G1-14301-01	6G1-14301-01	91-93
REC6G1-14546-00	6G1-14546-01	93-98
REC6G1-14985-00	647-14323-00	93-100
REC6G1-24304-02	6G1-24304-02	77
REC6G1-24411-00	6G1-24411-00	87
REC6G1-24431-01	6G1-24431-01	87
REC6G1-24471-00	6G1-24471-00	87
REC6G1-41112-A1	6G1-41112-A1	140-223
REC6G1-41114-A0	6G1-41114-A0	140-223
REC6G1-41133-A0	6G1-41133-A0	268
REC6G1-44315-A0	6G1-44315-A0	155-346
REC6G1-44322-00	6G1-44322-00	155-346
REC6G1-44323-00	6G1-44323-00	155-346
REC6G1-44328-00	6G1-44328-00	346
REC6G1-44352-00	6G1-44352-00	143-155-346
REC6G1-45113-A1	6G1-45113-A1	223-252
REC6G1-45315-A0	6G1-45315-A0	346
REC6G1-45316-09	6G1-45316-09	289
REC6G1-45317-09	6G1-45317-09	289
REC6G1-45362-09	6G1-45362-09	289
REC6G1-45611-01	6G1-45611-01	346-387

REF	R.O. / OEM	
REC6G1-45631-00	6G1-45631-00	346-387
REC6G1-81970-62	664-81970-60	116
REC6G1-81970-62	664-81970-61	116
REC6G1-81970-62	664-81970-62	116
REC6G1-81970-62	664-81970-63	116
REC6G1-81970-62	676-81970-00	116
REC6G1-81970-62	6E9-81970-70	116
REC6G1-81970-62	6G1-81970-00	116
REC6G1-81970-62	6G1-81970-60	116
REC6G1-81970-62	6G1-81970-61	116
REC6G1-81970-62	6G1-81970-62	116
REC6G1-81970-62	6G1-81970-A0	116
REC6G1-W0001-C1	6G1-W0001-C0	144
REC6G1-W0001-C1	6N0-W0001-20	346
REC6G1-W0078-A1	6G1-W0078-00	150
REC6G1-W0078-A1	6G1-W0078-01	150
REC6G1-W0078-A1	6G1-W0078-A1	150-346
REC6G1-W0078-A1	6N0-W0078-A0	150
REC6G1-W0078-A1	6G1-W0078-A1	155
REC6G1-W0093-00	6G1-W0093-00	93-95-223
REC6G5-11181-A2	6G5-11181-A3	247-249-254
REC6G5-11193-A0	6F5-11193-A0	247
REC6G5-11193-A0	6G5-11193-A1	255
REC6G5-11382-A1	6G5-11382-A1	142-245-247
REC6G5-11411-02	6G5-11411-02	247-256
REC6G5-11631-00K	6G5-11631-00-93	265-266-267
REC6G5-11642-00K	6G5-11642-00-93	265-266-267
REC6G5-13645-A1	6G5-13645-A2	276
REC6G5-14416-A1	6G5-14416-A1	275
REC6G5-14483-01	6G5-14483-A1	276
REC6G5-41112-A1	6G5-41112-A1	142-247
REC6G5-41114-A0	6G5-41114-A0	142-247
REC6G5-41134-A1	6G5-41134-A1	270
REC6G5-41217-00	6G5-41217-01	101
REC6G5-43864-00	6G5-43864-00	125
REC6G5-44150-02	6G5-44150-02	381
REC6G5-44323-00	6G5-44323-00	329-333-381-385
REC6G5-44323-00	6G5-44323-01	149
REC6G5-44323-00	6G5-44323-00	155-157
REC6G5-45113-A1	6G5-45113-A1	245-247
REC6G5-45113-A1	6G5-45113-A2	253-254
REC6G5-45114-A0	6G5-45114-A1	272
REC6G5-45383-01	6G5-45383-01	327-379
REC6G5-45384-00	6G5-45384-00	327-379
REC6G5-45501-21	6G5-45501-21	381-391-392
REC6G5-45536-01	6G5-45536-01	381
REC6G5-45551-00	6G5-45551-01	379-391-392
REC6G5-45560-00	6G5-45560-01	379-391-392
REC6G5-45571-00	6G5-45571-02	379-391-392
REC6G5-45576-10	6G5-45576-10	327
REC6G5-45631-00	6G5-45631-00	379-391-392
REC6G5-81960-A0	6G5-81960-A0	116
REC6G5-85510-11	6G5-85510-10	121
REC6G5-85540-12	6G5-85540-10	119
REC6G5-85540-12	6G5-85540-11	119
REC6G5-85540-12	6G5-85540-12	119
REC6G5-W0001-A3	6G5-W0001-03	252
REC6G5-W0001-A3	6G5-W0001-A3-00	247
REC6G5-W0001-A3	6G5-W0001-03	254
REC6G5-W0078-A1	6G5-W0078-00	152
REC6G5-W0078-A1	6G5-W0078-01	152
REC6G5-W0078-A1	6G5-W0078-A1	152-157-378
REC6G8-11181-A1	6G8-11181-00	181
REC6G8-11181-A1	6G8-11181-A1	215-218
REC6G8-11351-A0	6G8-11351-00	181
REC6G8-11351-A0	6G8-11351-A0	217-218
REC6G8-12414-A0	60R-E2414-A0	180
REC6G8-12414-A0	6G8-12414-00	181
REC6G8-12414-A0	6G8-12414-A0	138
REC6G8-13440-00	6G8-13440-00	83
REC6G8-13645-00	6G8-13645-00	273
REC6G8-13646-A0	6G8-13646-00	273
REC6G8-14198-A0	6G8-14198-00	273
REC6G8-15374-00	6G8-15374-00	273
REC6G8-41112-02	6G8-41112-02	140-181
REC6G8-41114-00	6G8-41114-00	140
REC6G8-45113-A1	6G8-45113-A1	271
REC6G8-46241-00	6G8-46241-00	267
REC6G8-81870-00	6G8-81870-00	120
REC6G8-81960-A1	6G8-81960-A1	117
REC6G8-W0001-A3	6G8-W0001-A3	181-216-218
REC6G9-85540-29	6G9-85540-20	117-118
REC6G9-85540-29	6G9-85540-21	117-118
REC6G9-85540-29	6G9-85540-22	117-118
REC6G9-85540-29	6G9-85540-29	117-118
REC6G9-W0001-C4	6G9-W0001-C4	144
REC6G9-W0001-C6	6G9-W0001-C6	144
REC6H0-81960-00	6H0-81960-00	116
REC6H0-W0093-00	6H0-W0093-00	97
REC6H1-11631-03K	6H1-11631-03-95	264-266
REC6H1-15359-01-94	6H1-15359-01-94	243
REC6H1-43800-17-8D	6H1-43800-13-4D	124
REC6H1-43800-17-8D	6H1-43800-14-4D	124
REC6H1-43800-17-8D	6H1-43800-15-4D	124
REC6H1-43800-17-8D	6H1-43800-16-4D	124
REC6H1-43800-17-8D	6H1-43800-17-8D	124
REC6H1-44144-00	6H1-44144-00	373
REC6H1-45214-00	6H1-45214-00	315-319
REC6H1-45215-00	6H1-45215-00	315-319
REC6H1-45611-00	6H1-45611-01-00	373-390-391
REC6H1-45631-01	6H1-45631-01-00	373-390-391
REC6H1-45634-02	6H1-45634-02	373

REF	R.O. / OEM	
REC6H1-45668-00	6H1-45668-00	315-319-331-335-337-341-373-383
REC6H1-81950-01	6H1-81950-00	115
REC6H1-81950-01	6H1-81950-01	115
REC6H1-85510-00	6H1-85510-00	121
REC6H1-W0001-00-00	6H1-W0001-A1	251
REC6H1-W0093-01-00	6H1-W0093-01	97
REC6H1-W0093-01-00	6H1-W0093-01-00	243
REC6H1-W0093-10	6H1-W0093-10	97
REC6H2-81960-10	6H2-81960-10	116
REC6H2-85540-13	6H2-85540-10	118
REC6H2-85540-13	6H2-85540-11	118
REC6H2-85540-13	6H2-85540-12	118
REC6H2-85540-13	6H2-85540-13	118
REC6H2-W0001-20	6H2-W0001-20	146
REC6H2-W0093-10	6H2-W0093-10	96-241
REC6H3-11181-A0	6H3-11181-A2	241-248-254
REC6H3-11193-A1	6H3-11193-A1	241-255
REC6H3-11631-01K	6H3-11631-01-96	241-262-266
REC6H3-11633-00	6H3-11633-00	241-261-262-264
REC6H3-11635-01K	6H3-11635-01	241-262
REC6H3-11636-01K	6H3-11636-01	241-262
REC6H3-12411-10	6H3-12411-00	137
REC6H3-12411-10	6H3-12411-01	137
REC6H3-12411-10	6H3-12411-10	137-241
REC6H3-12411-10	6H3-12411-11	137
REC6H3-12414-A1	62Y-12414-00	203-205-207
REC6H3-12414-A1	6H3-12414-A1	138-241
REC6H3-13621-A1	6H3-13621-A1	274
REC6H3-13622-A1	6H3-13622-A1	274
REC6H3-14198-A1	6H3-14198-A1	274
REC6H3-14457-01	6H3-14457-01	94
REC6H3-14590-00	6H3-14590-01	93-98
REC6H3-41112-A0	6H3-41112-A0	141-241
REC6H3-41114-A0	6H3-41114-A0	141-241
REC6H3-41217-00	6H3-41217-00	101
REC6H3-44311-00	6H3-44311-00	148
REC6H3-44315-00	6H3-44315-00	154-156
REC6H3-44323-00	6H3-44323-00-00	149-154-156
REC6H3-44352-00	697-44352-00	369
REC6H3-44352-00	6H3-44352-00	143-154-156-313-317
REC6H3-45113-00	6H3-45113-00	241
REC6H3-45113-00	6H3-45113-A0	253-254
REC6H3-45114-A1	6H3-45114-A1	271
REC6H3-45123-00	6H3-45123-00	269
REC6H3-45127-00	6H3-45127-00	269
REC6H3-82510-03	6H3-82510-00	114
REC6H3-82510-03	6H3-82510-01	114
REC6H3-82510-03	6H3-82510-02	114
REC6H3-82510-03	6H3-82510-03	114
REC6H3-85520-00	6H3-85520-00	107
REC6H3-85540-11	6H3-85540-10	118
REC6H3-85540-11	6H3-85540-11	118
REC6H3-85540-11	6H3-85540-12	118
REC6H3-85540-13	6H3-85540-10	118
REC6H3-85540-13	6H3-85540-11	118
REC6H3-85540-13	6H3-85540-12	118
REC6H3-85540-13	6H3-85540-13	118
REC6H3-85570-10	6H3-85470-10	104
REC6H3-W0001-02	6H3-W0001-02	241-250-254
REC6H3-W0001-22	6H3-W0001-22	145
REC6H3-W0078-02	6H3-W0078-00	68-69-152-154-156
REC6H3-W0093-02	6H3-W0093-02	93-97
REC6H4-11181-00	6H4-11181-A2	248-254
REC6H4-11193-A1	6H4-11193-00	255
REC6H4-11610-00-00	6H4-11610-00	264-266
REC6H4-11631-00K	6H4-11631-00-96	264-266
REC6H4-11631-01K	6H4-11631-01-95	237-263-266
REC6H4-11634-01	6H4-11634-01	237-263-264
REC6H4-11635-00K	6H4-11635-00	264
REC6H4-11635-01K	6H4-11635-01	237-263
REC6H4-11636-00K	6H4-11636-00	264
REC6H4-11636-01K	6H4-11636-01	237-263
REC6H4-11641-00	6H4-11641-00	237-261
REC6H4-14198-01	6H4-14198-01	274
REC6H4-14198-09	6H4-14198-00	274
REC6H4-14984-00	6H4-14984-00	94
REC6H4-14985-01	650-14385-00	100
REC6H4-14985-01	6H4-14985-00	100
REC6H4-14985-01	6H4-14985-01	100
REC6H4-14985-01	6M6-14385-00	100
REC6H4-15369-A1	6H4-15369-A1	237
REC6H4-41112-A0	6H4-41112-A0	141-237
REC6H4-41114-A0	6H4-41114-A0	141-237
REC6H4-41134-A0	6H4-41134-A0	269
REC6H4-44352-02	6H4-44352-00	309
REC6H4-44352-02	6H4-44352-02	143-297-301-305-355-357-359-361
REC6H4-44352-02	6H4-44352-02	154-155-156
REC6H4-45113-00	6H4-45113-00	237
REC6H4-45113-00	6H4-45113-A0	253-254
REC6H4-45551-00	6H4-45551-00	359-389-390
REC6H4-45560-00	6H4-45560-00	359-389-390
REC6H4-45570-00	6H4-45571-00	359-389-390
REC6H4-45631-00	6H4-45631-00	389-390
REC6H4-W0001-04	6H4-W0001-04	237-250
REC6H4-W0001-21	6H4-W0001-21	359
REC6H4-W0001-A1	6H4-W0001-01	250-254
REC6H4-W0078-00	6H4-W0078-00	151
REC6H4-W0078-00	6H4-W0078-A0	359

REF	R.O. / OEM	
REC6H4-W0078-00	6H4-W0078-A0	155-156
REC6H4-W0093-01-00	6H4-W0093-01	96
REC6H4-W0093-03	6H4-W0093-03	96-237
REC6H9-45551-00	6H9-45551-00	365-389
REC6J1-11610-00	6J1-11610-00	221
REC6J8-11181-A2	6J8-11181-A1	231
REC6J8-11181-A2	6J8-11181-A2	248
REC6J8-11181-A2	6J8-11181-A2	254
REC6J8-11631-02	6J8-11631-02-97	231-263-266
REC6J8-13411-00	6J8-13411-00	83
REC6J8-24471-00	6J8-24471-00	87
REC6J8-45113-00	6J8-45113-A0	231-253-254
REC6J8-85540-H2	6J8-85540-H2	120
REC6J8-W0001-21	6J8-W0001-21	145-357
REC6J8-W0078-A2	6J8-W0078-A1	150-151
REC6J8-W0078-A2	6J8-W0078-A2	155-357
REC6J9-45332-00-CA	6J9-45332-00-CA	327-379-391-392
REC6J9-45611-00	6J9-45611-01	327-379-391-392
REC6K1-82510-07	6K1-82510-06	113
REC6K1-82570-13	6K1-82570-13	128
REC6K4-11422-00	6K4-11422-00	256
REC6K4-11432-00	6K4-11432-00	256
REC6K4-11651-00	6K4-11651-00	260
REC6K5-11601-02	6K5-11601-02	241-262-264-266
REC6K5-11601-12	6K5-11601-12	241-262-264
REC6K5-11601-22	6K5-11601-22	241-262-264
REC6K5-11631-03K	6K5-11631-03-95	264-266
REC6K5-11635-03K	6K5-11635-03	264
REC6K5-11636-03K	6K5-11636-03	264
REC6K5-11681-00	6K5-11681-00	261
REC6K5-14301-03	6K5-14301-03 + 6K5-14302-03 + 6K5-14303-03	92-93
REC6K5-45551-00	6K5-45551-00	388-390
REC6K5-45560-00	6K5-45560-00	388-390
REC6K5-45570-00	6K5-45570-00	390
REC6K5-W0001-02	6K5-W0001-02	251
REC6K5-W0078-01	6K5-W0078-01	152-156
REC6K7-11633-00	6K7-11633-00	261-265
REC6K7-13645-A2	6K7-13645-A2	276
REC6K7-13646-A2	6K7-13646-A2	276
REC6K7-W0093-09	6K7-W0093-09	97
REC6K8-41122-A1	6K8-41122-A1	141-229
REC6K8-41124-A1	6K8-41124-A1	141-229
REC6L2-11181-A1	6L2-11181-A3	248-254
REC6L2-11193-A1	6L2-11193-A1	255
REC6L2-13621-00	6L2-13621-00	274
REC6L2-14384-00-00	6L2-14384-00	94
REC6L2-14385-00	6L2-14385-00	93-100
REC6L2-14399-00	6L2-14399-00	94
REC6L2-26301-00	6L2-26301-00	130
REC6L2-41112-A3	6L2-41112-A2	141
REC6L2-41114-A1	6L2-41114-A1	141
REC6L2-41133-A3	6L2-41133-A3	268
REC6L2-41134-00	6L2-41134-00	268
REC6L2-44322-00	6L2-44322-00	155
REC6L2-44352-00	6L2-44352-00	66-143-155
REC6L2-45113-A2	6L2-45113-A1	253-254
REC6L2-45611-00	612-45611-00	295
REC6L2-45611-00	6L2-45611-00	355-388-389
REC6L2-45987-00	6L2-45987-01	295-355-357-405
REC6L2-W0001-03	6L2-W0001-A2	250-254
REC6L2-W0001-C3	6L2-W0001-C3	145
REC6L2-W0078-00	6L2-W0078-00	151-155
REC6L2-W0093-00	6L2-W0093-00	95
REC6L5-13761-00	65L-13761-00	89-90
REC6L5-14301-03	6L5-14301-03	91-93
REC6L5-44323-00	6L5-44323-00	149
REC6L5-44352-00	6L5-44352-00	143-154
REC6L8-G3118-01	6L8-G3118-01	134
REC6N0-G2177-00	6N0-G2177-00	134
REC6N0-G5551-00	6N0-G5551-00	346-387
REC6N0-G5560-00	6N0-G5560-00	346-387
REC6N0-G5571-00	6N0-G5571-00	346-387
REC6N6-W0078-02	6E5-W0078-02	374
REC6N6-W0078-02	6N6-W0078-00	152
REC6N6-W0078-02	6N6-W0078-02	152-155-156-157
REC6N6-W0093-02	6N6-W0093-02	97-245
REC6N7-11411-00	6N7-11411-00	245-256
REC6P2-11181-00	6P2-11181-00	213-216-218
REC6P2-11182-00	6P2-11182-00	213-216-218
REC6P2-11193-00	6P2-11193-00	213
REC6P2-11194-00	6P2-11194-00	213
REC6P2-1131B-00	6P2-1131B-00	213
REC6P2-13761-00	6P2-13761-00	89-90
REC6P2-13761-11	6P2-13761-11	90
REC6P2-13906-00	6P2-13906-00	89-90
REC6P2-14984-00	62P-14984-00	72-73-86-88
REC6P2-41112-00	6P2-41112-00	213
REC6P2-41114-00	6P2-41114-00	213
REC6P2-41122-00	6P2-41122-00	213
REC6P2-44150-00	6P2-44150-00	339
REC6P2-44323-00	6P2-44323-0	149
REC6P2-44323-00	6P2-44323-00	155-157-339
REC6P2-45331-00-9S	6P2-45331-00-9S	339
REC6P2-45501-01	6P2-45501-00	339
REC6P2-45501-11	6P2-45501-10	339
REC6P2-46241-02	6P2-46241-01	213
REC6P2-46241-02	6P2-46241-02	267
REC6P2-81960-03	6P2-81960-02	116

REF	R.O. / OEM	
REC6P2-81960-03	6P2-81960-03	116
REC6P2-W0001-01	6P2-W0001-00	217
REC6P2-W0001-01	6P2-W0001-01	213-217-218
REC6P2-W0078-00	61P2-W0078-00	336
REC6P2-W0078-00	6P2-W0078-00	73-153-155-157
REC6P2-WS245-00	6P2-24563-00	81
REC6P2-WS245-00	6P2-WS245-00	81
REC6P3-24564-00	6P3-24564-00	71-72-73-81
REC6P3-WS24A-00	6P3-24563-00	81
REC6P3-WS24A-00	6P3-WS24A-00	81
REC6P3-WS24A-00	6P3-WS24A-01	81
REC6P3-WS24A-00	6P3-WS24A-01	71-72-73-81
REC6R3-11411-00	6R3-11411-00	256
REC6R3-24560-00	6R3-24560-00	80-81
REC6R3-81960-10	6R3-81960-10	116
REC6R3-82563-01	6R3-82563-00	122
REC6R3-82563-01	6R3-82563-01	122
REC6R3-85570-01	6R3-85570-01104	104
REC6R3-W0001-03	6R3-W0001-A3	252
REC6R4-13200-02	6R4-13200-00	84
REC6R4-13200-02	6R4-13200-01	84
REC6R4-13200-02	6R4-13200-02	84
REC6R5-11603-00	6R5-11603-00	265-266-267
REC6R5-11631-01K	6R5-11631-11-93	265-266-267
REC6R5-11631-11K	6R5-11361-11-93	245
REC6R5-11631-11K	6R5-11631-11-93	265
REC6R5-11631-11K	6R5-11631-11-93	266-267
REC6R5-11633-00	6R5-11633-10	245-247-261-265
REC6R5-11634-00	6R5-11634-00	265
REC6R5-11634-00	6R5-11634-10	245-247-265
REC6R5-11642-01K	6R5-11642-11-93	245-265-266-267
REC6R5-11642-11K	6R5-11642-11-93	265-266-267
REC6R5-11650-10	6F5-11650-11	247
REC6R5-11650-10	6R5-116950-0	245
REC6R6-W0001-02-00	6R6-W0001-02	250-254
REC6R7-11181-A0	6R7-11181-A1	248-254
REC6S1-41136-00	6S1-41136-00	270
REC6S1-85885-00	6S1-85885-00	90-102
REC6X2-85885-10	61A-85885-00	103
REC6X2-85885-10	6X2-85885-10	103
REC703-48205-16	703-48205-10	126
REC703-48205-16	703-48205-11	126
REC703-48205-16	703-48205-12	126
REC703-48205-16	703-48205-13	126
REC703-48205-16	703-48205-14	126
REC703-48205-16	703-48205-15	126
REC703-48205-16	703-48205-16	126
REC703-48205-16	703-48205-17	126
REC703-48205-16	703-48205-18	126
REC703-48205-16	703-48205-1A	126
REC703-48205-16	703-48205-1B	126
REC703-48205-16	703-48205-20	126
REC703-48205-16	703-48205-21	126
REC703-48230-14	703-48230-10	126
REC703-48230-14	703-48230-11	126
REC703-48230-14	703-48230-12	126
REC703-48230-14	703-48230-13	126
REC703-48230-14	703-48230-14	126
REC703-48230-14	703-48230-15	126
REC703-48230-14	703-48230-16	126
REC703-48230-14	703-48230-17	126
REC703-48230-14	703-48230-18	126
REC703-48230-14	703-48230-1A	126
REC703-48230-14	703-48230-20	126
REC703-48230-14	703-48230-21	126
REC703-82510-44	703-82510-43	114
REC703-82563-21	703-82563-20/21	128
REC704-48205-R0	704-48205-11	127
REC704-48205-R0	704-48205-12	127
REC704-48205-R0	704-48205-13	127
REC704-48205-R0	704-48205-14	127
REC704-48205-R0	704-48205-15	127
REC704-48205-R0	704-48205-B0	127
REC704-48205-R0	704-48205-B1	127
REC704-48205-R0	704-48205-P0	127
REC704-48205-R0	704-48205-P1	127
REC704-48205-R0	704-48205-R0	127
REC704-48207-R0	704-48207-20	127
REC704-48207-R0	704-48207-21	127
REC704-48207-R0	704-48207-22	127
REC704-48207-R0	704-48207-30	127
REC704-48207-R0	704-48207-31	127
REC704-48207-R0	704-48207-39	127
REC704-48207-R0	704-48207-P1	127
REC704-48207-R0	704-48207-R0	127
REC704-82563-J2	704-82563-J0/J1/J2	128
REC704-82570-12	6E5-82570-05	128
REC704-82570-12	704-82570-08	128
REC704-82570-12	704-82570-10	128
REC704-82570-12	704-82570-11	128
REC704-82570-12	704-82570-12	128
REC70720		79
REC84419M	696-W0093-01	96
REC84419M	696-W0093-02	96
REC8542561	65W-W0093-02	95-190-197
REC855686		77
REC866169T01	6C5-13907-00	86
REC881346T	68V-81960-00	117
REC881346T	6D3-81960-00	117
REC89-825096T01	66G1-81941-10	114
REC89-825096T01	6E5-81950-01	114
REC89-825096T01	6G1-81940-00	114
REC89-825096T01	6G1-81941-10	110

REF	R.O. / OEM	
REC90101-06M56	90101-06M56	353
REC90101-06M56	97095-06030	209
REC90105-06M01	90105-06M01	363
REC90109-08022	90109-08022	239-243-247
REC90109-08M71	90109-08M71	245
REC90119-06M10	90119-06M10	325-329-333-377-385
REC90119-08M13	90119-08M13	321-357-371
REC90119-08M14	90119-08M14	317-325-329-333-335-339-341-377-381-385-386
REC90119-08M15	90119-08M15	301-305-309-13-361
REC90119-08M21	90119-08M21	231
REC90119-08M33	90119-08M33	317
REC90119-08M87	90119-08M87	321
REC90149-06M00	90149-06M00	365
REC90151-05M00	90152-05000	315-319
REC90170-12138	90170-012138	365
REC90170-12138	90170-12138	299-303-307-311-359-361-369
REC90170-16M01	90170-16M01	315-319-323-327-371-375-379
REC90170-16M01	90170-16M01-00	373
REC90170-16M19	90170-16M19	331-335-337-383
REC90171-10M01	90171-10M01	289-291-293-405-351
REC90171-14013-00	90171-14013	295-353-355-357-405
REC90171-16011	90171-16011	299-303-307-311-315-319-359-361-365-369-371
REC90171-16011	90171-16011	405
REC90171-16011	90171-16011-00	373
REC90171-18M04	90171-18M04	323-327-331-335-337-341-375-379-383-405
REC90179-08M06	90179-08M06	291-293-348-351
REC90179-09M02	90179-09M02	353
REC90179-10M14	90179-10M14	295-355-357
REC90183-02M03	90183-02M03	315-319-331-335-337-341-373-383
REC90201-02M00	90201-02M00	331-335-337-341-383
REC90201-10M01	90201-10M01	289-405
REC90201-12565	90201-12565	225-260
REC90201-14377	9020-14377	227-260
REC90201-16M00	90201-16M00	331-335-337-383
REC90201-17682	90201-17682	291-293-349-351
REC90201-17M00	90201-17M00-00	373
REC90201-20417	90201-20417	233-235-239-241-243-260-261-353-355-357
REC90201-20M27	90201-20M27	229-260
REC90201-21M75	90201-21M75	245-247-261
REC90201-22429	90201-22429	299-303-307-359-361-365-369
REC90201-22M01	90201-22M01	325-329-333-377-381-385
REC90201-23M01	90201-23M01	245-247-261
REC90201-30M92	90201-30M92	323-327-375-379
REC90201-31M00	90201-31M00	331-383
REC90201-42014	90201-42014	339
REC90201-46M29	90201-46M29	227
REC90206-22M19	90206-22M19	325-329-333-377-381-385
REC90209-18112	90209-18112	221-223-225-260
REC90209-20159	90209-20M23	227-260
REC90209-24M03	90209-24M03	229-260-261
REC90209-27M07	90209-27M07	233-235-260-261
REC90209-27M11	90209-27M11	261
REC90214-48M03	90214-48M03	365-369
REC90250-03M10	90250-03M10	343
REC90250-05010	90250-05010	291-293-295-349-351-353-355-357
REC90250-05036	90250-05036	347
REC90250-05046	90250-05046	345
REC90250-06023	90250-06023	299-303-307-311-359-361-363-365-369
REC90250-07M02	90250-07M02	315-319-371
REC90250-07M02	90250-07M02-00	373
REC90250-08M07	90250-08M07	323-327-335-375-379
REC90280-03024	90280-03024	154-155-156-309-313-346-347-349-357-359
REC90280-03M03	90280-03M03	154-156-301-305-317-355-361-369
REC90280-04002	90280-04002	335
REC90280-04M00	90280-04M00	156-363-367

REF	R.O. / OEM	
REC90280-04M04	90280-04M04	154-155-156-321-371
REC90280-04M04	90280-04M04-00	373
REC90280-04M05	90280-04M05	155-156-157-325-329-333-339-377-381-385-386
REC90280-05049	90280-05049	229
REC90282-04010	902082-04010	365
REC90282-04010	90282-04010	315-319-323-353-357-359-369-371-373-375
REC90282-04M00	90282-04M00	327
REC90340-08002	6E0-45316-09	346
REC90340-08002	90340-08002	283-285-287-289-291-282-299-303-307-311-315-319-323-327-331-335-337-341345-350-353-357-361-363-369-370-373-379-383
REC90340-08002	90340-08014	348-359
REC90340-08002	90340-08M04	295-343-347-365-375
REC90381-20001	90381-20001	133
REC90386-18M63	90386-18M63	133
REC90386-22M13	90386-22M13	133
REC90386-22M98	90386-22M98	133
REC90386-25M31	90386-25M31	133
REC90386-30M77	90386-30M77	133
REC90386-38M89	90386-38M89	133
REC90387-32002	90387-32002	229
REC90389-22M01	90389-22M01	299-303-307-311-361-365-405
REC90389-25M00	90389-25M00	315-319-371-405
REC90430-06M03	90430-06M03	209-211-213-214-347-363-365
REC90430-08020	90430-08003	292-303-307-311-315-323
REC90430-08020	90430-08020	283-285-287-289-291-299-327-331-335-337-341-343-345-346-347-348-350-353-355-357-359-361-363-365-369-370-375-379-383-386
REC90430-08020	93210-06ME6	295
REC90430-08020	90430-08020	64-65-66-67-68-69-70-71-72-73
REC90430-08020	90430-08020-00	373
REC90430-12072	90430-12072	301-305-309-361-367-371
REC90430-12072	90430-12072-00	373
REC90480-18065	90480-18065	235-239
REC90480-20M05	90480-20M05	139-209-211-243-245-247
REC90501-10M77	90501-10M77	331-335-337-341-383
REC90501-11M10-00	90501-11M10	329-333-339-381-385
REC90501-12M48	90501-12M48	315-319-373
REC90501-14M02	90501-14M02	235
REC90501-16233	90501-16233	369-371
REC90501-16M01	90501-16M01	359-365
REC90501-16M11	90501-16M11	139-209-211-243-245-247
REC90501-16M37	90501-16M37	323-327-375-379
REC90501-450A2	90501-450A2	339
REC90794-46866	907-94469-05	78
REC90794-46868	907-94469-13	78
REC91490-30025	91490-30020	289-291-293-351
REC91490-30025	91490-30025	64-65-67-68-69-299-303-307-311-315-357-361-365-405
REC91490-30030	91490-30030	353-359-405
REC91490-30040	91490-30040	343
REC91490-40030	91490-40025	319-369-371
REC91490-40030	91490-40030	68-69-70-71-72-73-323-327-331-335-337-341-375-379-383-405
REC91490-40030	91490-40030-00	373
REC92990-16200	92990-16200	359-369-405
REC92990-18200	92990-18200	323-327-331-335-337-375-379-405
REC93101-10M14	93101-10M14	345
REC93101-10M25	93101-10M25	221
REC93101-11M23	93101-11M23	289-346
REC93101-12M70	93101-12M70	341
REC93101-13018	93101-13018	227
REC93101-13M12	93101-13M12	287-345
REC93101-13M27	93101-13M27	270
REC93101-14M01	93101-14M01	225

REF	R.O. / OEM	
REC93101-15074	93101-15074	289-346-347
REC93101-16001	93101-16001	229-233
REC93101-17054	93101-17054	291-293-349-351
REC93101-18050	93101-18050	347
REC93101-20048	93101-20001	292
REC93101-20048	93101-20048	291-349-351-363
REC93101-20M07	93101-20M07	295-353-355-357
REC93101-20M29	93101-20M29	221-225
REC93101-20M34	93101-20M34	223
REC93101-22067	93101-22067	353-355-359-365-367-369
REC93101-22M00	93101-22067	297
REC93101-22M00	93101-22M00	299-303-307-311-361-363
REC93101-22M15	93101-22M15	245-247
REC93101-22M60	93101-22M60	301-305-361
REC93101-23070	93101-23070	317-357-359-369
REC93101-25018	93101-250-18	227
REC93101-25M03	93101-25M03	315-319-321-371
REC93101-25M03	93101-25M03-00	373
REC93101-25M35	93101-25M28	231
REC93101-25M57	93101-25M57	309-313
REC93101-28M16	93101-28M16	325-329-333-335-339-377-381-385-386
REC93101-30002	93101-300002	335-337
REC93101-30M17	93101-30M17	323-327-331-375-379-383
REC93101-30M33	93101-30M33	235
REC93102-15M32	93102-15M32	220
REC93102-20M25	93102-20M25	223-225
REC93102-23096	93102-23096	237
REC93102-25008	93102-25008	229
REC93102-25M28	93102-25M28	237
REC93102-25M48	93102-25M48	227
REC93102-26M27	93102-26M27	231
REC93102-28135	93102-28135	239
REC93102-30M05	93102-30M05	243
REC93102-30M23	93102-30M23	241
REC93102-30M56	93102-30M56	233
REC93102-32M07	93102-32M07	229-239
REC93102-35M13	93102-35M13	245-247
REC93102-35M18	93102-35M18	235
REC93102-36M02	93102-36M02	243
REC93102-36M24	93102-36M24	241
REC93102-38008	93102-38008	211-213
REC93102-38008	93102-38M59	209
REC93102-40M14	93102-40M14	245-247
REC93102-48009	93102-48009	209
REC93102-60004	93102-60004	211
REC93102-63004	93102-63008	213
REC93103-10052	93103-10052	343
REC93103-11051	93103-11051	343
REC93104-16M01	93104-16M01	235-237
REC93104-16M01	93104-16M04	231
REC93104-18049	93104-18049	239
REC93104-20M02	93104-20M02	243
REC93104-22M07	93104-22M07	335
REC93106-09014	93106-09014	305-309-313-317-321-325-329-333-335-339-369-371-377-381-385
REC93106-09014	93106-09014-00	373
REC93106-18M01	93106-18M01	241
REC93109-44M00	93109-44M00	132
REC93110-23M00	93110-23M00	227
REC93210-06ME6	93210-06ME6	289-291-292-297-301-351-361
REC93210-07540	93210-07003	329
REC93210-19MJ1	93210-19MJ1	211-213
REC93210-22M02	93210-22M02	235
REC93210-25552	93210-25552	211-213
REC93210-32738	93210-32738	65-66-68-69-80-81
REC93210-33MG4	93210-33MG4	301-305-309-313-361
REC93210-37160	93210-37160	325-329-333-335-339-341-377-381
REC93210-37M67	93210-37M67	385-386
REC93210-41042	93210-41042	357-359-367-369
REC93210-42101	93210-42101	343
REC93210-42159	93210-42159	223-225-231-239
REC93210-42M70	93210-42M70	225
REC93210-44398	93210-44398	154-155-289-291
REC93210-45161	93210-45161	155
REC93210-46044	93210-46044	317-321-371
REC93210-46044	93210-46044-00	373
REC93210-46M16	93210-46M16	227-229-241-243
REC93210-48214	93210-48214	287-341-345
REC93210-48MG8	93210-48MG8	301-309-361
REC93210-49046	93210-49046	154-289-293-317-321-346-359-369-371
REC93210-49046	93210-49046-00	373
REC93210-53M08	93210-53M08	289-346

REF	R.O. / OEM	
REC93210-54534	93210-54534	333-339-385
REC93210-54534	93210-55M14	325-329-377-381
REC93210-54M54	93210-54M54	223
REC93210-57M00	93210-57M00	363
REC93210-57M09	93210-57M09	291-293-349-351
REC93210-58677	93210-58144	325-329-377-381
REC93210-58677	93210-58677	347
REC93210-58M21	93210-58M21	229-237
REC93210-59MG7	93210-59MG7	154-156-301-305-309-313-361
REC93210-60MA3	93210-60MA3	357
REC93210-62269	93210-62269	239-243
REC93210-64ME7	93210-64ME7	295-355
REC93210-65752-00	93210-64488	333-335
REC93210-65M50	93210-65M50	233-235-241-295-355
REC93210-66M98	93210-66M98	359-365-369
REC93210-69MG6	93210-69MG6	299-303-307-311-341-361
REC93210-74M35	93210-74M35	245-247
REC93210-74MG5	93210-74MG5	299-303-311-361
REC93210-85M97	93210-85M97	371
REC93210-85M97	93210-85M97-00	373
REC93210-86M38	93210-86M38	155-156-157-325-329-333-339-377-381-385-386
REC93210-86M39	93210-86M39	315-319-323-375
REC93210-94003	93210-94003	335-341
REC93210-97M55	93210-97M55	327-379
REC93211-04001	93211-04001	245-247
REC93211-04384	93211-04384	331-337-383
REC93304-205U0	93304-205U0	257
REC93306-001U1	93306-001U1	299-303-307-311-361-394-395-396
REC93306-00501	93306-00501	291-293-349-351-393-394
REC93306-00519	93306-00519	347-393
REC93306-00612	93306-00612	353-355-357-394-395
REC93306-00702	93306-00702	359-365-369-394-395-396
REC93306-204U0	93306-204U0	221-223
REC93306-204U0	93306-240U0	225-257
REC93306-204Y7	93306-20401	363
REC93306-205U2	93306-205U7	257
REC93306-205U7	93306-205U7	227-257
REC93306-206U5	93306-206U5	243-258
REC93306-207U0	93306-207U0	315-319-371-395-396-397
REC93306-207U0	93306-207U0-00	373
REC93306-208U0	93306-208U0	245-247-258-259-323-375-393-397
REC93306-209U0	93306-209U0	327-335-379-397-398-399-400
REC93306-209U1	93306-209U1	259
REC93306-210U0	93306-210U0	331-337-383-399-400
REC93306-304U0	93306-304U0	257
REC93306-30510	93306-30510	257-258
REC93306-305U3	93306-305U3	229-231-257-258
REC93306-305U8	93306-305-U8	237-258
REC93306-306V1	93306-303V1	235
REC93306-306V1	93306-306V1	241-257-258
REC93306-306V5	9306-306V5	233-258
REC93306-307U0	93306-307U0	233-235-258
REC93310-112V0	93310-112V0	221-223-257-262
REC93310-32337	93310-323V6	245
REC93310-32337	93603-21111	265
REC93310-32337	93310-32337	247-258-259-265
REC93310-32668	93310-32668	247
REC93310-326V4	93310-326V4	259
REC93310-418U0	93310-418U0	225-257
REC93310-418V1	93310-418V1	221-223-257
REC93310-522W0	93310-522W0	257-258
REC93310-527W1	93310-527W1	258
REC93310-620V5	93310-620V5	227-257
REC93310-624U5	93310-62406	229-257-258
REC93310-636U4	93310-636U4	243-258
REC93310-727U0	93310-727U0	233-258
REC93310-727V7	93310-727V7	235-258
REC93310-730V6	93310-730V6	258
REC93310-730V8	93310-730V8	239-243-258
REC93310-835U8	93310-835U8	243-258
REC93310-836U0	93310-836U0	258-259
REC93310-836V2	93310-836V2	245-247-258-259
REC93310-954U1	93310-954U1	245-247-258-259
REC93310-954V3	93310-954V3	258-259
REC93310-959U0	93310-959U0	247
REC93311-632U1	93311-632U1	239-258
REC93311-632U7	93311-632U7	231-257
REC93311-632V4	93311-632V4	257-258
REC93311-636U6	93311-636U6	241-257-258

REF	R.O. / OEM	
REC93311-83280	93311-83280	331-335-337-383-399-400
REC93311-832U4	93311-832U4	239-258
REC93311-85894	93311-85894	335
REC93311-928U5	93311-928U5	329-381-397-398-399-400
REC93311-940U3	93311-940U3	245-247-258-259
REC93311-940V0	93311-940V0	247
REC93315-017U4	93315-017U4	353-394-395
REC93315-217U0	93315-217U0	363-395
REC93315-22004	93315-22004	295-353-355-357-394-395
REC93315-220V7	93315-220V7	355-357-394-395
REC93315-314V8	93315-314V8	291-292-351-393-394
REC93315-317U2	93315-317U2	291-293-349-351-393-394
REC93315-32224	93315-32224	301-305-309-313-359-361-367-369-394-395-396
REC93315-324U1	93315-324U1	363-395
REC93315-325V1	93315-325V1	371-394-395-396
REC93315-325V1	93315-325V1-00	373
REC93315-425U7	93315-425U7	323-375-396-397
REC93315-425V3	93315-425V3	327-379-397-398-399-400
REC93315-43061	93315-43061	327-331-335-379-383-397-398-399-400
REC93315-430U8	93315-430U8	323-375-396-397-398-399-400
REC93315-430V5	93315-430V5	396-397-398-399-400
REC93315-628U9	93315-628U9	325-377-396-397-398
REC93317-22204	93317-22204	299-303-307-311-359-361-365-369-394-395-396
REC93317-322V0	93317-322V0	315-319-396-397
REC93317-325U0	93317-325U0	315-319-371-396-397
REC93317-325U0	93317-325U0-00	373
REC93317-330U2	93317-330U2	325-329-333-339-377-381-385-396-397-398-399-400
REC93332-00001	93332-00001	301-305-309-313-357-361-369-394-395-396
REC93332-00003	93332-00003	299-303-307-361-365-369-394-395-396
REC93332-00005	93332-00005	291-293-295-349-351-353-355-393-394-395
REC93332-00023	93332-00023	394-395-396
REC93332-00048	93332-00048	327-331-397-398-399-400
REC93332-000A5	93332-000A5	335
REC93332-000U0	93332-000U0	363-395
REC93332-000U3	93332-000U3	317-321-371-396-397
REC93332-000U3	93332-000U3-00	373
REC93332-000U5	93332-000U5	396
REC93332-000U7	93332-000U7	323-375-396-397
REC93332-000UE	93332-000UE	233-235-258
REC93332-000V3	93332-000V3	327-379-397-398-399-400
REC93332-000W1	93332-000W1	331-337-383-399-400
REC93332-000W5	93332-000WS	355-394-395
REC93332-000W7	93332-000W7	371-394-395-396
REC93332-000W7	93332-000W7-00	373
REC93340-67011	93340-67011	335-341
REC93341-214U1	93314-314V8	291
REC93341-214U1	93341-214U1	348-393-394
REC93341-41414	93341-41414	351-393-394
REC93341-93020	93341-93020	333-385
REC93341-93020	93341-930U9	339
REC93341-930V2	93341-930V2	325-329-377-381-396-397-398-399-400
REC93342-624U0	93342-624U0	363
REC93390-000U0	93390-000U0	363-395
REC93390-000U2	93390-000U2	397-398-399
REC93399-99951	93399-99951	229-257
REC93440-52009	93440-52008	227
REC93440-68M03	93440-68M03	233-235
REC93450-13022	93450-13022	221-223-225-262
REC93450-15023	93450-15023	227-262
REC93501-04011	93501-04011	331-335-337-341-383
REC93503-16003	93503-16003	315-319-323-327-373-375-379
REC93507-32031	93507-32009	323-327

REF	R.O. / OEM	
REC93507-32031	93507-32031	375-379
REC93511-32027	93511-32017	327
REC93511-32027	93511-32027	323-375-379
REC93602-14104	93602-14104	227-257-262
REC93602-14118	93602-14118	225-257-262
REC93602-18M12	93602-18M12	229
REC93602-20M02	93602-20M02	229-237-257-258-263-264
REC93603-18M09	93603-18M09	241-257-258-262-264
REC93603-21111	93603-21111	233-235-239-243-258-259-263-264-265
REC93606-12019	90606-12019	205
REC93606-12019	93606-11M24	297
REC93606-12019	93606-12019	187-195-201-203-207-209-211-213-214-221-227-229-231-237-299-303-307-311-315-319-325-329-333-335-339-341-349-367-371-377-381-385
REC93606-12019	93606-42019	386
REC93608-12M05	93608-12M05	323-331-337-341-383
REC95380-06700	95380-06700	301-361
REC97075-10040	97075-10040	299-303-307-311-319-369-370
REC97080-08045	97080-08045	289-291-351
REC97095-06040	97095-06040	347-355
REC97095-06045	97095-06045	211-287-346
REC97095-08045	97095-08045	293-363-367-369
REC97095-08045	97395-08045	359
REC97095-08055	97095-08055	363-367-369
REC97095-08055	97395-08055	359
REC97395-08070	97395-08070-00	373
REC99001-06600	99001-06600	287-346
REC99001-08600-00	99001-08600	305-309-313-317-321-325-329-333-335-339-369-371-377-381-385
REC99590-10114	99590-10114	337-383
REC99999-02808	99999-02808	134
RECK0A-A3721-00	K0A-A3721-00	209
RECK0A-A3722-00	K0A-A3722-00	209
RECKITF100D		70
RECKITF100F		70
RECKITF115A		70
RECKITF115B		71
RECKITF150CR		71
RECKITF150G		72
RECKITF150RR		71
RECKITF15C		65
RECKITF2.5A		64
RECKITF2.5B		64
RECKITF200A		72
RECKITF200C		72
RECKITF20A		65
RECKITF20B		65
RECKITF225B		72
RECKITF225C		73
RECKITF250D		73
RECKITF25A		66
RECKITF25D		66
RECKITF25G		66
RECKITF300A		73
RECKITF30A		67
RECKITF30B		67
RECKITF350A		73
RECKITF40B		67
RECKITF4A		64
RECKITF50A		67
RECKITF50F		68
RECKITF5A		64
RECKITF60A		69
RECKITF6A		64
RECKITF6C		64
RECKITF70A		69
RECKITF80A		69
RECKITF80B		70
RECKITF9.9C		65
RECKITFT25B		66
RECKITFT25F		66
RECKITFT50B		68
RECKITFT50C		68
RECKITFT50G		68
RECKITFT60B		69
RECKITFT8D		65
RECN26-13440-00	N26-13440-00	83-214
RECN26-13440-00	N26-13440-02	73-83
RECOBBRACKET		77
RECOBELEMENT		78
RECOBFILALU		78
RECOBFILTER		78
RECPIN4		125
RECPIN4.5		125
RECPIN6		125
RECTOOLTRIM1		125
RECTOOLTRIM2		125

REF	R.O. / OEM	
RECTOOLTRIM3		125
RECTOOLTRIMKIT		125
RECYS-225-15		78
RM35-802893Q		78
RM92-858026QB1U6	92-858026QB1	84
RM92-858027QB1U3	92-858027QB1	84
RM92-8M0086220U6	92-8M0086220	84
RM92-8M0086221U3	92-8M0086221	84
S		
SIE18-8013		74
SIE18-8015		74
SOL2011-083-08P		402
SOL3011-073-05S	6L5-45949-00-EL	402
SOL3011-075-07S	6E0-45943-01-EL	402
SOL3011-085-07	6G1-45947-00-EL	402
SOL3011-085-08	6G1-45943-00-EL	402
SOL3011-085-09	6G1-45941-00-EL	402
SOL3011-090-07-P	647-45943-00-EL	402
SOL3111-093-07		402
SOL3111-093-08	683-45947-00-EL	402
SOL3111-093-09	683-45945-00-EL	402
SOL3111-093-10	683-45942-00-EL	402
SOL3111-093-11	683-45943-00-EL	402
SOL3111-093-12	683-45941-00-00	402
SOL3211-099-09	664-45941-01-EL	402
SOL3211-099-10	664-45945-00-EL	402
SOL3211-099-11	664-45947-01-EL	402
SOL3211-099-12	664-45954-00-EL	402
SOL3211-099-13	664-45949-02-EL	402
SOL3231-101-13	MAR-6YT30-02-12	402
SOL3231-103-12	664-45970-00-98	402
SOL3231-105-11	664-45972-00-98	402
SOL3231-108-10		402
SOL3311-110-15	663-45943-02-EL	402
SOL3311-110-16	663-45949-01-EL	402
SOL3311-110-17	663-45941-01-EL	402
SOL3311-111-13	663-45945-02-EL	402
SOL3311-111-14	663-45958-01-EL	402
SOL3311-114-12	663-45952-02-EL	402
SOL3311-115-10-P		402
SOL3311-115-11-P		402
SOL3311-115-12-P		402
SOL3311-116-11	663-45947-02-EL	402
SOL3311-121-09	663-45956-01-EL	402
SOL3331-111-13	663-45945-02-EL	402
SOL3331-111-14	663-45958-01-EL	402
SOL3331-114-12	663-45970-60-98	402
SOL3331-116-11	663-45972-60-98	402
SOL3331-119-10	663-45954-01-EL	402
SOL3411-130-19	6E5-45941-00-EL	402
SOL3411-130-21	6E5-45943-00-EL	402
SOL3411-133-17	6E5-45945-00-EL	402
SOL3411-135-15	6E5-45947-00-EL	402
SOL3411-138-13	6E5-45949-00-EL	402
SOL3411-140-11	6E5-45954-00-EL	402
SOL3412-133-17		402
SOL3412-135-15		402
SOL3412-138-13		402
SOL3413-125-19	6E5-45941-00-EL	402
SOL3413-125-21	6E5-45943-00-EL	402
SOL3413-128-17	6E5-45945-00-EL	402
SOL3413-130-15	6E5-45947-00-EL	402
SOL3413-133-13	6E5-45949-00-EL	402
SOL3431-130-19	688-45970-03-98	402
SOL3431-130-21	688-45972-02-98	402
SOL3431-133-17	688-45930-02-98	402
SOL3431-135-15	688-45978-60-98	402
SOL3432-130-19		402
SOL3432-133-17		402
SOL3511-142-23	6G5-45949-00-98	403
SOL3511-143-21	6G5-45949-00-98	403
SOL3511-145-19	6G5-45945-01-98	403
SOL3511-148-17	6G5-45947-01-98	403
SOL3511-150-15	6G5-45941-00-98	403
SOL3512-142-23	6G5-45949-00-98	403
SOL3512-143-21		403
SOL3512-145-19	6K1-45945-01-98	403
SOL3512-148-17	6K1-45947-00-98	403
SOL3512-150-15	6G5-45952-00-98	403
SOL3513-140-21	6G5-45949-00-98	403
SOL3513-143-19	6G5-45945-01-98	403
SOL3513-145-17	6G5-45947-01-98	403
SOL3513-148-15	6G5-45941-00-98	403
SOL3514-140-21		403
SOL3514-143-19	6K1-45945-01-98	403
SOL3514-145-17	6K1-45947-00-98	403
SOL3514-148-15	6G5-45952-00-98	403
SOL3531-140-19	6G5-45974-03-98	403
SOL3531-140-21	6G5-45972-02-98	403
SOL3531-140-23	6G5-45976-01-98	403
SOL3531-143-17	6G5-45978-03-98	403
SOL3531-145-15	6G5-45970-02-98	403
SOL3532-140-19	6K1-45974-02-98	403
SOL3532-140-21	6K1-45972-01-98	403
SOL3532-140-23	6K1-45976-00-98	403
SOL3532-143-17	6K1-45978-02-98	403
SOL3532-145-15	6K1-45970-01-98	403
SOL3571-145-25		403
SOL3571-145-27		403
SOL3571-148-23	6G5-45949-00-98	403
SOL3571-150-21	6G5-45949-00-98	403
SOL3571-153-19	6G5-45945-01-98	403
SOL3571-155-17	6G5-45947-01-98	403
SOL3571-158-15	6G5-45941-00-98	403

REF	R.O. / OEM	
SOL3572-148-23		403
SOL3572-150-21		403
SOL3572-153-19	6K1-45945-01-98	403
SOL3572-155-17	6K1-45947-00-98	403
SOL3572-158-15	6G5-45952-00-98	403
SOL9311-110-15		404
SOL9311-111-13		404
SOL9311-111-14		404
SOL9311-114-12		404
SOL9311-116-11		404
SOL9311-120-10		404
SOL9311-121-09		404
SOL9331-110-15		404
SOL9331-111-13		404
SOL9331-111-14		404
SOL9331-114-12		404
SOL9331-116-11		404
SOL9411-132-19		404
SOL9411-132-21		404
SOL9411-133-17		404
SOL9411-135-15		404
SOL9411-138-13		404
SOL9411-140-09		404
SOL9411-140-11		404
SOL9431-130-19		404
SOL9431-130-21		404
SOL9431-133-17		404
SOL9431-135-15		404
SOL9431-138-13		404
SOL9432-130-19		404
SOL9432-133-17		404
SOL9432-135-15		404
SOL9432-138-13		404
SOL9511-143-21		404
SOL9511-145-19		404
SOL9511-148-17		404
SOL9511-150-15		404
SOL9511-153-13		404
SOL9511-155-11		404
SOL9511-160-13		404
SOL9531-140-19		404
SOL9531-140-21		404
SOL9531-140-23		404
SOL9531-143-17		404
SOL9531-145-15		404
SOL9532-140-19		404
SOL9532-140-21		404
SOL9532-140-23		404
SOL9532-143-17		404
SOL9532-145-15		404
SOL9571-145-25		404
SOL9571-148-23		404
SOL9571-150-21		404
SOL9571-153-19		404
SOL9571-155-17		404
SOL9571-158-15		404
SOL9572-145-25		404
SOL9572-148-23		404
SOL9572-150-21		404
SOL9572-153-19		404
SOL9572-155-17		404
SOL9572-158-15		404
SOLRBX-102		405
SOLRBX-103		405
SOLRBX-108		405
SOLRBX-117		405
SOLRBX-127		405
STA93900		136
STA93922		136
STA93932		136
STA94100		136
T		
TEN01100	664-45371-01	164-169
TEN01100AL	664-45371-01	164-169
TEN01101	679-45371-00	164-169-365-369
TEN01101AL	679-45371-00	164-169
TEN01102		164
TEN01103	6L6-45371-00	164-169
TEN01103AL	6L6-45371-00	164-169
TEN01104	688-45371-02	164-169
TEN01104AL	688-45371-02	164-169
TEN01105	6E5-45251-00	164-169
TEN01106	6E8-45251-00	164
TEN01107		165
TEN01108	6G1-45251-02	165-169
TEN01109	676-45251-00	163-169
TEN01110	688-45251-01	163-169
TEN01111		163
TEN01112	6G5-45251-01	166-169
TEN01112	6G5-45251-02	166-169
TEN01112AL	6G5-45251-01	166-169
TEN01112AL	6G5-45251-02	166-169
TEN01112-1	6AW-45251	166-169
TEN01113	6H1-45251-03	166-169
TEN01114		167
TEN01115	6H1-45251-02	166-169
TEN01115AL	6H1-45251-02	166-169
TEN01116	6B4-45251-00	348
TEN01116	6E8-45251-02	164
TEN01116	6B4-45251-00	169
TEN01117	6L5-45251-02	166-169
TEN01118	6G1-45251-03	164
TEN01118	6N0-G5251-00	346

REF	R.O. / OEM	
TEN01118	6G1-45251-03	169
TEN01119	6T5-45371-00	165
TEN01120	6T5-45373-00	166
TEN01121	689-11325-00	167-229
TEN01122	6T4-45836-00	164
TEN01123	65W-45251-00	164-169
TEN01123	6E0-45251-11-00	164-169
TEN01123AL	65W-45251-00	164-169
TEN01123AL	6E0-45251-11-00	164-169
TEN01124	61A-45371-00	165-169
TEN01124AL	61A-45371-00	165-169
TEN01125	6H1-45251-01	167
TEN01126		167
TEN01127	676-45251-00	166-233-235
TEN01128	682-45251-00	166
TEN01129	6E5-45251-00	165
TEN01130	61N-45371-00	165-355
TEN01131	63D-45251-00	165
TEN01131	63D-45251-01	165
TEN01131	63D-45251-00	169
TEN01132	63D-45251-10	163
TEN01132	67C-45251-00	163
TEN01132	63D-45251-10	169
TEN01133	6J9-45371-01	165-169
TEN01133AL	6J9-45371-01	165-169
TEN01134	6K1-45371-02	165-169
TEN01135	61N-45251-01	163-169
TEN01135AL	61N-45251-01	163-169
TEN01136	66M-45371-00	65-164-169
TEN01137	6G8-45251-00	164-169
TEN01138	6AV-45251-00	164
TEN01138	6V3-45251-01	164

REF	R.O. / OEM	
TEN01139	6T5-45251-00	167
TEN01140	67F-45371-00	165
TEN01141	67F-45371-00	165-169
TEN01141AL	67F-45371-00	165-169
TEN01142	68T-45251-00	163-169
TEN01143	6J9-45371-00	165
TEN01144	6K1-45371-00	168-169
TEN01144AL	6K1-45371-00	168-169
TEN01145	69L-45371-00	168-169
TEN01146	67F-11325-00	163
TEN01146-1	67F-11325-01	163
TEN01147	688-11325-00	163-237-243
TEN01148	6G8-11325-00	163-169
TEN01149	62Y-11325-00	163
TEN01150	6J8-11325-00	163-229-231
TEN01151	66M-11325-00	163
TEN01152	6E5-11325-00	163-169-245-247
TEN01153	6E5-45371-00	164
TEN01153	6E5-45371-10	370-375
TEN01154	6AH-45251-00	169
TEN01154AL	6AH-45251-00	65-165
TEN01155	6AW-45373-00	166-169
TEN01155AL	6AW-45373-00	166-169
TEN01156	68V-11325-02	72-167
TEN01156AL	68V-11325-02	72-167
TEN01156-1	68V-11325-01	167
TEN01156/1AL	68V-11325-01	167
TEN01157	6U0-45251-00	165-169
TEN01158	6U4-45373-00	166-169
TEN01159	6U4-45251-00	167-169
TEN01160T	N51-11325-01	167

REF	R.O. / OEM	
TEN01161	6BL-11325-00	166
TEN01162	682-11325-00	166-227
TEN01163	68T-11325-00	166
TEN01164	63P-11325-11-00	166-169
TEN01165	63P-11325-21	211
TEN01165	63P-11325-21-00	163
TEN01165	63P-11325-21	70-71
TEN01166	664-11325-00	225
TEN01166	676-11325-00	166-233-235
TEN01167	63P-11325-01-00	166-169
TEN01168	61A-11325-00	163
TEN01169	6AW-45619-00	165
TEN01170	6AW-11325-00	214
TEN01170	6AW-11325-00	167
TEN01170	6AW-11325-00	73-169
TEN01171	6AQ-1132N-00	73-167-169
TEN01172	6AW-1132R-00	73-167-169-214
TEN01173	6AW-1132L-00	73-167-169
TEN01174	6AW-1132U-00	73-167
TEN01175	6AW-1132T-00	73-167-169
TEN01176	6AW-1132M-00	167-169
TEN01177	6AW-1132P-00	73-168-169-214
TENKITYAMAHA150-200		168
TENKITYAMAHA150-200C		168
TENKITYAMAHA200-250		168
TENKITYAMAHA200-300		168
TENKITYAMAHA40-60		168
TENKITYAMAHA60-90		168
TRI305-0386		74
TRI305-0566		74

RO / OEM --> REF

R.O. / OEM	REF	
137-11633-10	PAF20-05020003	189-219
30X-12117-00	PAF15-07040006	189-193-195-199-201-203-207
30X-12117-00	PAF15-07050006	185
30X-12118-00	PAF15-07040007	185-189-193-195-199-201-203-207
3FV-13440-00	REC3FV-13440-00	83
3FV-13440-10	REC3FV-13440-00	83
3FV-13440-20	REC3FV-13440-00	83
3FV-13440-30	REC3FV-13440-00	67-83
3YF-12113-00	PAF20-05030004	189
41106-ZW-000	CM41106-ZW000	158
50M-14355-00	REC50M-14355-00	99
51Y-12114-00	PAF25-05050005	193-195-199-201-203-207
51Y-12119-00	PA166F-010003	173-180-189-195-201
51Y-12119-00	PAF166-010003	179-193
51Y-12119-00	PAPS2700.04.03	175-185-199-203-205-207-213
5GH-13440-00	PAF15-07010023	183
5GH-13440-00	PAF25-05000100	191
5GH-13440-00	REC5GH-13440-00	83-183-191-197-209
5GH-13440-10	REC5GH-13440-00	207
5GH-13440-20	REC5GH-13440-60	195-203
5GH-13440-30	REC5GH-13440-00	83
5GH-13440-50	REC5GH-13440-60	83-201-205
5GH-13440-60	REC5GH-13440-60	65-66-67-68-69-83-187
5GH-13440-70	REC5GH-13440-00	65-66-67-68-69-70-71-83
6AW-81800-00	REC6AW-81800-00	112
6CB-81800-00/01	REC6CE-81800-01	112
6CB-82310-00	REC6CB-82310-00	106
6CE-81800-00/01	REC6CE-81800-01	112
6D8-24560-08/09	REC6D8-24560-08	80-81
60E-81950-00	REC60E-81950-00	115
60H-12416-00	REC60H-12416-00	245-247
60R-12113-00	PAF6-04050003	179
60R-E2414-A0	REC6G8-12414-A0	180
60R-G6241-00	REC68T-46241-00	180
60V-11181-00	REC60V-11181-00	249-254
60V-12411-00	REC60V-12411-00	70-137
60V-13621-A0	REC60V-13621-A0	276
60V-13645-00	REC60V-13645-00	276
60V-13907-00	REC60V-13907-00	86
60V-24251-01	REC60V-24251-01	82
60V-43880-00	PH200-T069	123
60V-44150-00	REC60V-44150-00	385
60V-45113-02	REC60V-45113-02	254
60V-45300-20-8D	REC421-A25	281
60V-45332-00-94	REC60V-45332-00-94	383
60V-45611-00	REC60V-45611-00	383
60V-81800-00	PH130-0076	112
60V-81950-00	REC60V-81950-00	115
60V-81960-00	REC60V-81960-05	117
60V-81960-01	REC60V-81960-05	117
60V-81960-02	REC60V-81960-05	117

R.O. / OEM	REF	
60V-81960-03	REC60V-81960-05	117
60V-81960-04	REC60V-81960-05	117
60V-81960-05	REC60V-81960-05	117
60W-45300-20-8D	REC428-A25	281
60X-44315-A0	REC60X-44315-A0	339-386
60X-81800-00	PH130-0076	112
60X-W0078-00	REC60X-W0078-00	153-157-386
612-45611-00	REC6L2-45611-00	295
61A-11193-A2	REC61A-11193-A2	255
61A-11325-00	CM61A-11325-00	161
61A-11325-00	TEN01168	163
61A-11381-A0	REC61A-11381-A0	276
61A-11650-00	REC61A-11650-00	261
61A-12414-A0	REC61A-12414-A0	138-231
61A-13411-00	REC61A-13411-00	83
61A-13621-A0	REC61A-13621-A0	276
61A-13645-00	REC61A-13645-00	276
61A-13646-00	REC61A-13646-00	276
61A-24563-00	REC61A-24563-00	81-82
61A-43811-00	REC48630-92J00	125
61A-43821-00	REC48630-94900	125
61A-43821-01	REC48630-94900	125
61A-43821-09	REC48630-94900	125
61A-43880-00	PH200-T050	124
61A-43880-01	PH200-T050	124
61A-44311-00	REC61A-44311-00	155-156-157-385
61A-44311-01	REC61A-44311-00	325-329-333-339-377-381-386
61A-44322-02	REC61A-44322-02	155-156-157-325-329-333-339-377-381-386
61A-45113-A0	REC61A-45113-A0	254
61A-45214-10	REC61A-45214-10	383
61A-45214-11	REC61A-45214-10	331
61A-45215-10	REC61A-45215-10	383
61A-45215-11	REC61A-45215-10	331
61A-45321-01	REC61A-45321-01	333-385
61A-45331-00-94	REC61A-45331-00-94	333-385-386
61A-45371-00	CM61A-45371	160-169-383
61A-45371-00	CM61A-45371-00A	160-169-331-335-337
61A-45371-00	TEN01124	165-169
61A-45371-00	TEN01124AL	165-169
61A-45376-00	REC61A-45376-00-94	333-339
61A-45376-00-94	REC61A-45376-00-94	341-385
61A-45501-20	REC61A-45501-20	385
61A-45501-30	REC61A-45501-30	385
61A-45527-00	REC61A-45527-00	325-329-333-377-381-385
61A-45538-00	REC61A-45538-00	325-329-333-377-381-385
61A-45567-00	REC61A-45567-00/60-0	331-337
61A-45577-00	REC61A-45577-00/60-0	331-337
61A-45587-00	REC61A-45587-00/60-0	333-339
61A-45587-00/60	REC61A-45587-00/60-0	385
61A-45631-03	REC61A-45631-03	383
61A-45632-00	REC61A-45632-00	331-337-383
61A-45633-00	REC61A-45633-00	331-337-383-392

R.O. / OEM	REF	
61A-45634-01	REC61A-45634-01	331-337-341-383
61A-45635-00	REC61A-45635-00	331-335-337-341-383
61A-45641-02	REC61A-45641-02	331-337-383
61A-81800-00	PH130-0059	110
61A-81800-01	PH130-0059	110
61A-81941-00	REC61A-81941-00	110-114
61A-81950-00	REC61A-81950-01	115
61A-81950-01	REC61A-81950-01	115
61A-81960-00	REC61A-81960-04	117
61A-81960-01	REC61A-81960-04	117
61A-81960-02	REC61A-81960-04	117
61A-81960-03	REC61A-81960-04	117
61A-81960-04	REC61A-81960-04	117
61A-85885-00	REC6X2-85885-10	103
61A-W0001-A1	REC61A-W0001-01	252-254
61A-W0078-01	REC61A-W0078-A1	153
61A-W0078-A1	REC61A-W0078-A1	328-383
61A-W0078-A3	REC61A-W0078-A1	71-72-155-157-333
61A-W0093-01	REC61A-W0093-01	97
61B-82510-01	REC61B-82510-02	113
61H-81800-00	PH130-0051	110
61H-81800-01	PH130-0051	110
61N-11181-A1	REC61N-11181-00	229
61N-11181-A2	REC61N-11181-00	248-254
61N-11515-00	REC61N-11515-00	229
61N-11603-00	REC61N-11603-00	229-263-266
61N-11604-00	REC61N-11604-00	229-263
61N-11605-00	REC61N-11605-00	229-263
61N-11631-00-95	REC61N-11631-00K	229-263-266
61N-11635-00	REC61N-11635-00K	229-263
61N-11636-00	REC61N-11636-00K	229-263
61N-14198-00	REC61N-14198-00	274
61N-14301-04	REC61N-14301-04	91-93
61N-24521-00	PAF15-07080002	80
61N-24560-00	PAF15-07080000	80
61N-24563-00	REC61N-24563-10	80
61N-24563-10	REC61N-24563-10	65-66-68-69-80-81-82
61N-26311-00	REC61N-26311-00	130
61N-44146-00	REC61N-44146-00	361
61N-44311-01	PAF25-04050000	297
61N-44311-01	PAF25-04050001	148-154-155-297-355
61N-44322-01	REC61N-44322-00	154-155-297-355
61N-44323-00	REC61N-44323-00	149-154-155-297-355
61N-44362-00	PAF25-04000017S	297-355
61N-44362-10	PAF25-04000017	297-355
61N-45127-00	PAF25-04000013	297-355
61N-45214-00	PAF25-04000021	295
61N-45251-00	PAF15-06000004	295
61N-45251-01	CM61N-45251-01	160-169-291-351-355
61N-45251-01	CM61N-45251-01A	65-66-160-169
61N-45251-01	TEN01135	163-169
61N-45251-01	TEN01135AL	163-169
61N-45311-02-4D	PAF25-04000001	295

R.O. / OEM	REF	
61N-45315-00	PAF25-04000009	297-355
61N-45361-01-4D	PAF25-04070001	295-355
61N-45361-01-8D	PAF25-04070000	295-388-389
61N-45371-00	TEN01130	165-355
61N-45510-00	PAF25-04010000S	297
61N-45510-00	REC61N-45510-00	355-388-389
61N-45510-10	PAF25-04010000L	297
61N-45510-10	REC61N-45510-10	355-388-389
61N-45536-00	PAF25-04000002	297-355
61N-45551-00	PAF25-04000005	295
61N-45551-00	REC61N-45551-00	355-388-389
61N-45560-00	REC61N-45560-10	295
61N-45560-10	REC61N-45560-10	355-388-389
61N-45571-00	PAF25-04070004	295
61N-45571-00	REC61N-45570-00	355-388-389
61N-45587-00-10	PAF25-04000003-2	297
61N-45587-00-11	PAF25-04000003-3	297
61N-45587-00-12	PAF25-04000003-4	297
61N-45587-00-13	PAF25-04000003-5	297
61N-45587-00-14	PAF25-04000003-6	297
61N-45587-00-15	PAF25-04000003-7	297
61N-85540-00	REC61N-85540-00	119
61N-85570-00	REC61N-85570-01	105
61N-85570-01	REC61N-85570-01	105
61N-W0001-E1	REC61N-W0001-E1	145-354
61N-W0078-10	REC61N-W0078-11	150
61N-W0078-11	REC61N-W0078-11	65-66-150-154-155-297-354
61N-W0093-00	REC61N-W0093-00	93-96-229
61P2-W0078-00	REC6P2-W0078-00	336
61T-11193-A1	REC61T-11193-A0	229-255
61T-45113-A0	REC61T-45113-A0	253-254
61T-W0001-02	REC61T-W0001-02	229-250-254-266-267
624-14485-00	PAT15-04010202	235
624-14485-00	REC624-14485-00	221-225-227-231-233-237-239-241-243
624-24634-00	PAF4-04120103	75
626-14390-90	REC626-14390-90	98
626-44365-01	REC626-44365-01	349-353
626-45316-09	REC626-45316-09	291-292-349
626-45577-00	PAF15-06080006-1	293-351
626-45577-00-01	PAF15-06080006-1	291-349
626-45577-00-03	PAF15-06080006-3	349
626-45577-00-05	PAF15-06080006-5	349
626-45577-10	PAF15-06080006-2	293
626-45577-20	PAF15-06080006-3	293
626-45577-30	PAF15-06080006-4	293
626-45577-40	PAF15-06080006-5	293
62P-14984-00	REC6P2-14984-00	72-73-86-88
62X-43880-00	PH200-T035	122
62X-43880-01	PH200-T035	122
62X-43880-09	PH200-T035	122
62Y-11325-00	CM62Y-11325-00	158
62Y-11325-00	CM62Y-11325-00A	65-66-67-68-69-158-197-203-205-207
62Y-11325-00	PAF25-02010005	191
62Y-11325-00	TEN01149	163
62Y-11372-01	PAF25-05010113	191
62Y-11416-00	PAF25-05010302-1	193-199
62Y-11416-10	PAF25-05010302-2	193-199
62Y-11633-00	PAF25-05020105	193-195-199-201-203-205-207-219
62Y-11650-10	PAF25-05020200	199
62Y-11654-00	PAF25-05020204	193-199
62Y-11656-00	PAF25-05020203-1	193-199
62Y-11656-00	PAF25-05020203-2	193
62Y-11656-10	PAF25-05020203-2	199
62Y-12116-00	PAF20-05030003	189
62Y-12116-00	PAF25-05050003	193-195-199-201-203-207
62Y-12121-00	PAF25-05050002	193-199-207
62Y-12158-00	PAF15-07040304	185-189-193-195-199-201-203-205-207
62Y-12159-00	PAF15-07040303	185-193-199
62Y-12216-00	PAF25-05050011	193-199-207
62Y-12231-00	PAF25-05050012	193-207
62Y-12238-00	PAF25-05050009	193-207
62Y-12279-00	PAF40-05040003	207
62Y-12414-00	PAF15-07010022	66-67-68-69-138-183-191-195-197-201
62Y-12414-00	REC6H3-12414-A1	203-205-207
62Y-12481-10	PAF25-05010113	203-205
62Y-14392-00	REC61N-14392-00	93-98
62Y-14485-00	PAF20-05040005	195
62Y-14485-00	PAF40-05070002	197-201-203-207
62Y-15312-00	REC62Y-15312-00	271
62Y-24410-04	PAF25-05130000	85
62Y-24471-00	PAF25-05130005	87
62Y-41113-00	REC62Y-41133-00	268

R.O. / OEM	REF	
62Y-43880-01	PH200-T036	122
62Y-43880-02	PH200-T036	122
62Y-44151-00	PAF60-04000003	303-307-311
62Y-44555-00	REC670-44555-00-94	135
62Y-45127-00	REC62Y-45127-00	268
62Y-45571-00	PAF60-04000500	311
62Y-45631-00	PAF60-04020003	307-311
62Y-46241-00	REC62Y-46241-00	207-267
62Y-82504-10	PAF15-07010103	103
62Y-W0001-20	REC62Y-W0001-22	146
62Y-W0001-21	REC62Y-W0001-22	146
62Y-W0001-22	REC62Y-W0001-22	146-306
633-11634-00	REC663-11634-00	233-263
633-85518-00	REC663-85518-00	133
634-11633-00	PAF15-07020006	183-219
634-11633-00	REC634-11633-00	227-260-262
63AH-61350-00	PAF20-07000100W	131
63D-11181-A2	REC63D-11181-A1	237-248-254
63D-11193-A0	REC63D-11193-A0	237-255
63D-11603-00	REC63D-11603-00	237-263
63D-11605-00	REC63D-11605-00	237-263
63D-44144-00	PA60-04000004	305-309-313
63D-44311-00	REC63D-44311-01	148-156-309-313
63D-44312-00	REC63D-44312-00	301-305-309-313-317-361
63D-44316-00	REC63D-44316-00	301-305-309-313-361
63D-44322-00	REC63D-44322-00	154-156-301-305-309-313-317-361
63D-44323-00	REC63D-44323-00	154-156-305-309-313
63D-44323-00-00	REC63D-44323-00	149
63D-44341-00	REC63D-44341-00	301-309-361
63D-45114-A0	REC63D-45114-A0	272
63D-45123-00	REC63D-45123-00	269
63D-45214-00	PAT40-04000022	299-303-307-311
63D-45215-00	PAT40-04000023	299-303-307-311
63D-45251-00	TEN01131	165-169
63D-45251-01	CM63D-45251-01	159-169
63D-45251-01	TEN01131	165
63D-45251-10	TEN01132	163-169
63D-45321-00	PAF60-04000101	305-309-313
63D-45344-00	PAF60-04000008	313
63D-45361-02-4D	REC63D-45361-02-4D	299-307-361
63D-45361-02-8D	PAF60-04030000	307-311
63D-45361-02-8D	REC63D-45361-02-4D	303-311-389-390
63D-45375-00	PAT40-04000014	301-305-309-313
63D-45375-00	REC688-45375-00	317-321-325
63D-45577-10	PAT40-04060005-2	299-303-307-311
63D-45577-20	PAT40-04060005-3	299-303-307-311
63D-45577-30	PAT40-04060005-4	299-303-307-311
63D-45577-40	PAT40-04060005-5	299-303-307-311
63D-45577-50	PAT40-04060005-6	299-303-307-311
63D-45577-60	PAT40-04060005-7	299-303-307-311
63D-45611-00	PAF60-04020001	303-307-311
63D-45635-00	PAF60-04020005	303-307-311
63D-85540-00	REC63D-85540-04	118
63D-85540-01	REC63D-85540-04	118
63D-85540-02	REC63D-85540-04	118
63D-85540-03	REC63D-85540-04	118
63D-85540-04	REC63D-85540-04	118
63D-W0001-00	REC63D-W0001-00	237-251-254
63D-W0078-01	REC63D-W0078-01	68-69-151-154-156-306-310
63P-11181-00	REC63P-11181-00	211-215-218
63P-11325-00	CM63P-11325-01	161
63P-11325-00	CM63P-11325-01A	161
63P-11325-01	CM63P-11325-01	161
63P-11325-01	CM63P-11325-01A	161-211-214
63P-11325-01-00	TEN01167	166-169
63P-11325-11	CM63P-11325-11	161-169
63P-11325-11	CM63P-11325-11A	71-73-161-211
63P-11325-11-00	TEN01164	166-169
63P-11325-21	TEN01165	70-71-211
63P-11325-21-00	TEN01165	163
63P-11351-00	REC63P-11351-01	211-218
63P-12414-00	REC63P-12414-00	71-138-211
63P-13761-00	REC63P-13761-01	90
63P-13761-01	REC63P-13761-01	90
63P-13906-00	REC63P-13906-00	89-90
63P-13907-00	REC63P-13907-03	86
63P-13907-01	REC63P-13907-03	86
63P-13907-02	REC63P-13907-03	86
63P-13907-03	REC63P-13907-03	86
63P-13915-00	REC63P-13915-00	70-71-72-73-82

R.O. / OEM	REF	
63P-14984-00	REC63P-14984-00	71-86-88
63P-15312-00	REC63P-15312-00	272
63P-41114-A1	REC63P-41114-A3	211
63P-4380003	REC63P-43800-20	124
63P-4380004	REC63P-43800-20	124
63P-4380006	REC63P-43800-20	124
63P-4380007	REC63P-43800-20	124
63P-438002D	REC63P-43800-20	124
63P-43811-10	REC48630-92J00	125
63P-43811-20	REC48630-92J00	125
63P-43880-03-00	REC18-6865	124
63P-43880-10	REC63P-43880-22	124
63P-43880-11	REC63P-43880-22	124
63P-43880-12	REC63P-43880-22	124
63P-43880-22	REC63P-43880-22	124
63P-45300-00-8D	REC416-B20F	278
63P-45300-02-8D	REC416-B20F	327
63P-45300-10-8D	REC416-B25F	278
63P-45300-12-8D	REC416-B25F	327
63P-45501-00	REC63P-45501-00	329-333
63P-45501-10	REC63P-45501-10	329-333
63P-45551-00	REC63P-45551-00	327
63P-45987-00	REC6E5-45987-00	323-327
63P-46241-00	REC63P-46241-00	211-267
63P-81800-00	PH130-0073	112
63P-81950-00	REC63P-81950-00	115
63P-81960-00	REC63P-81960-02	116
63P-81960-01	REC63P-81960-02	116
63P-81960-02	REC63P-81960-02	116
63P-82380-00	REC63P-82380-00	90-102
63P-85886-00	REC13650-52G00	102
63V-11181-A1	REC63V-11181-A1	248
63V-11181-A2	REC63V-11181-A1	227-254
63V-11412-00	REC63V-11412-00	227-256
63V-11422-00	REC63V-11422-00	227-256
63V-11432-00	REC63V-11432-00	227-256
63V-11442-00	REC63V-11442-00	227-256
63V-11445-00	REC63V-11445-00	227
63V-11515-02	REC63V-11515-02	227
63V-14126-00	REC63V-14126-00	94
63V-14301-00	REC63V-14301-00	93
63V-14984-00	REC63V-14984-00	94
63V-14985-00	REC63V-14985-00	93-100
63V-15396-01-CA	REC63V-15396-01-CA	227
63V-15713-00	PAF15-07130107	112
63V-15714-00	PAF15-07130201	113
63V-15716-00	PAF15-07130001	113
63V-15741-00	PAF15-07130202	112
63V-15767-00	PAF15-07130203	112
63V-15784-00	PAF15-07130204	112
63V-24411-00	REC63V-24411-00	87
63V-41111-00-1S	REC63V-41111-00-1S	227
63V-41112-A0	REC63V-41112-A0	140-227
63V-41113-00-1S	REC63V-41113-00-1S	227
63V-41133-A1	REC63V-41133-A1	268
63V-43111-00-4D	PAF15-01010100	131
63V-43111-01-4D	PAF15-01010100	131
63V-43111-A2-4D	PAF15-01010100	131
63V-43112-00-4D	PAF15-01010200	131
63V-43112-01-4D	PAF15-01010200	131
63V-43131-00	PAF15-01010001	132
63V-43131-01	PAF15-01010001	132
63V-43131-10	PAF15-01010001	132
63V-43145-00	PAF15-01010007	132
63V-43311-00-4D	PAF15-01010301S	131
63V-43311-01-4D	PAF15-01010301S	131
63V-44150-00	PAF15-06030000S	291-351
63V-44150-10	PAF15-06030000L	291-351
63V-44301-00	REC63V-44301-00	289-291-351
63V-44301-00	REC63V-44301-00	154-155
63V-44301-00-00	REC63V-44301-00	147
63V-44322-00	REC63V-44322-00	154-155-289-291-293-351
63V-44323-00	REC63V-44323-00	154-155-291-351
63V-44323-00-00	REC63V-44323-00	149
63V-44328-00	PAF15-06000014	289-291-351
63V-44328-01	PAF15-06000014	293
63V-44338-00	REC664-44338-00	351
63V-44352-01	CEF500363	143
63V-44352-01	REC63V-44352-01	143-154-155-291-293-351
63V-44361-01	REC63V-44361-01	351
63V-44361-11	REC63V-44361-11	351
63V-44365-10	PAF15-02000006	289-291-351
63V-44514-01-CA	REC63V-44514-01-CA	135
63V-45113-A1	REC63V-45113-A1	227-253-254
63V-45215-00	PAF15-06000002	293-350
63V-45300-00-4D	REC63V-45300-03-8D	279
63V-45300-03-4D	REC63V-45300-03-8D	279
63V-45300-03-8D	REC63V-45300-03-8D	279
63V-45300-10-4D	REC63V-45300-13-8D	279
63V-45300-13-4D	REC63V-45300-13-8D	279
63V-45300-13-8D	REC63V-45300-13-8D	279

R.O. / OEM	REF	
63V-45311-01-4D	PAF15-06000001	351
63V-45315-A0	REC63V-45315-A0	291-351
63V-45331-00-5B	REC63V-45331-00-5B	291-351
63V-45375-00	PAF15-06020005	289-291-292-351
63V-45510-00	PAF15-06040000S	291
63V-45510-01	REC63V-45510-01	351-387-388
63V-45510-11	REC63V-45501-10	291-387-388
63V-45510-11	REC63V-45510-11	351-387-388
63V-45536-00	PAF15-06000006	291-292-351
63V-45551-00	REC63V-45551-00	291-293-351-387-388
63V-45551-00-4D	PAF15-00000001	132
63V-45943-10-00	PAF15-06090000	402
63V-61350-00	PAF15-11020000W	131
63V-85520-00	REC63V-85520-00	106
63V-85533-00	REC63V-85533-00	104
63V-85540-00	REC63V-85540-00-01	118-119
63V-85540-01	REC63V-85540-00-01	118-119
63V-85540-02	REC63V-85540-00-01	118
63V-85570-00	REC63V-85570-00	105
63V-85580-01	REC63V-85580-01	107
63V-W0001-00	REC63V-W0001-00	226
63V-W0001-01	REC63V-W0001-00	249-254
63V-W0001-21	REC63V-W0001-21	144
63V-W0078-00	REC63V-W0078-01	150
63V-W0078-01	REC63V-W0078-01	65-154-155-290-350
63V-W0093-00	REC63V-W0093-00	93-95-226
63V-W4311-00-4D	PAF15-01010200	131
63V-W4311-03-4D	PAF15-01010200	131
63V-WS431-B6-8D	PAF15-01010200	131
63W-13610-00	REC63W-13610-00	92-99
646-11633-00	REC646-11633-00	220
646-11651-00	REC648-11651-00	260-261
646-11651-02	REC646-11651-02	220-260
646-11681-00	REC646-11681-00	220-260
646-14623-A1	REC646-14623-A1	220-254-270
646-24251-01	PAF4-05000300	80
646-24251-01	REC35-80365M	80
646-24251-02	PAF4-05000300	64-80-81
646-24251-02	REC35-80365M	80-82-83
646-44322-00	REC646-44322-00	343
646-44323-00	REC646-44322-00	343
646-44323-00	REC646-44323-00	148-155
646-44352-01	CEF500324	143
646-44352-01	REC646-44352-01	143-155-343
646-44365-00	REC646-44365-00	343
646-44366-01	REC646-44366-01	343
646-45534-00-03	PAF2.6-03000017	343
646-45551-00	REC646-45551-00	343-387
646-45560-00	REC646-45560-00	343-387
647-11610-00	REC647-11610-00	225-262-266
647-11610-10	REC647-11610-10	225
647-11610-20	REC647-11610-20	225
647-14323-00	REC647-14323-00	98
647-14323-00	REC6G1-14985-00	93-100
647-14385-00	REC647-14385-00	100
647-14386-10	REC647-14386-10	99
647-44366-00	REC647-44366-00	154-155-291-346-347-351
647-45316-09	REC647-45316-09	347
647-45551-00	REC647-45551-00	347-387
647-45560-00	REC647-45560-00	347-387
647-45570-01	REC647-45570-00	347-387
647-45943-00-EL	SOL3011-090-07-P	402
648-11633-00	REC648-11633-00	237-260-261-263-264
648-13621-A1	REC648-13621-A0	273
648-13645-A0	REC648-13645-A0	273
648-14198-A0	REC648-14198-A0	274
648-14384-01	REC648-14384-01-00	94
648-14385-00	REC648-14385-00	100
648-24411-00	REC648-24411-00	87
648-24434-01	REC648-24434-01	88
648-24435-02	REC648-24435-02	88
648-44146-00	REC648-44146-00	134
648-45633-00	REC648-45633-00	291-295-349-351-353-355-357
648-45633-11	PAF25-04060000	295
648-45633-11	REC648-45633-00	293-387-388-389
648-45635-00	REC648-45635-00	295-353-355
64D-11603-01	REC64D-11603-01	245
64D-11603-02	REC64D-11603-01	247-265
64D-11603-02	REC64D-11603-01	266-267
64D-11603-04	REC64D-11604-01	265
64D-11603-05	REC64D-11605-01	265
64D-11604-01	REC64D-11604-01	245-247
64D-11604-02	REC64D-11604-01	247
64D-11605-01	REC64D-11605-01	245
64D-11605-02	REC64D-11605-01	247
64D-11631-02-90	REC64D-11631-00K	247-265-267
64D-11642-02-90	REC64D-11642-00K	247-265-267
64D-14384-01	REC64D-14384-1	94

R.O. / OEM	REF	
64D-14394-00	REC64D-14394-00	99
64D-45300-01-8D	REC416-A20	280
64D-45300-02-8D	REC416-A20	379
64D-45300-21-8D	REC416-A25	280
64D-45300-22-8D	REC416-A25	379
64D-W0093-00	REC64D-W0093-00	97-247
64E-13645-A0	REC64E-13645-A0	276
64E-43811-02	REC48630-92J00	125
64E-43820-00	REC48630-96J03	125
64E-43820-08	REC48630-96J03	125
64E-43820-09	REC48630-96J03	125
64E-43821-00	REC48630-96J03	125
64E-43821-00	REC64E-43821-05	125
64E-43821-05	REC48630-92J00	125
64E-43821-08	REC48630-96J03	125
64E-43821-09	REC48630-96J03	125
64E-43822-00	REC64E-43822-00	125
64E-4384J-00	REC64E-4384J-00	125
64E-43880-02-40	REC18-6865	124
64E-43880-02-40	REC63P-43800-20	124
64J-12159-00	PAF15-07040303	189
64J-24560-00	REC64J-24560-10	80
64J-24560-10	REC64J-24560-10	80
64J-W0001-20	REC64J-W0001-20	145
64J-W0001-21	REC64J-W0001-21	146
64K-45300-02-NA	REC416-B20	281
64P-45300-10-8D	REC418-A25	280
64P-45300-10-8D	REC418-B25F	278
64P-45300-12-8D	REC418-B25F	327
650-11370-00	REC650-11370-00	231
650-11370-01	REC650-11370-00	225-235-237-239-241-243
650-11651-00	REC650-11651-04	227-260
650-14385-00	REC6H4-14985-01	100
650-14485-03	REC650-14485-03	227
650-24351-00	REC650-24351-51	75
650-24351-01	REC650-24351-51	75
650-24351-50	REC650-24351-51	75
650-24351-51	REC650-24351-51	75
650-24378-00	PAF4-04010102	173-175-177-179-180-235-237-241
650-24431-A0	REC650-24431-A0	88
650-44147-00	REC650-44147-00	134-363-367
650-45635-00	REC650-45635-00	291-293-349-351
655-12414-A1	REC655-12414-A1	138-229
65E-85570-00	REC63V-85570-00	105
65F-42537-00	PAF15-01000001	133
65L-13645-00	REC65L-13645-00	275
65L-13646-00	REC65L-13646-00	275
65L-13761-00	REC6L5-13761-00	89-90
65L-13907-00	REC6AW-14984-00	86
65L-24563-00	REC65L-24563-00	71-72-81-82
65L-85886-00	REC13650-56B00	102
65N-45321-00	REC65N-45321-00	335
65N-W0078-A1	REC65N-W0078-A1	152-157
65W-08M87	PAGB/T5782-M8X35	191
65W-11111-02-94	PAF25-05050100	191
65W-11119-00	PAF25-05010106	197
65W-11168-00	PAF25-05010103	191
65W-11169-00	PAF25-05010108	191
65W-11181-30	PAF25-05040000	191-215-218
65W-11191-00-94	PAF25-05000005	191
65W-11351-00	PAF25-00000013	191
65W-11351-10	PAF25-00000013	217-218
65W-11356-00	PAF25-05000004	191
65W-11411-01	PAF25-05020001	193-219
65W-11476-00	PAF25-05000022	193-199
65W-11536-10	PAF25-05000021	193-199
65W-11537-01	PAF25-05050017	193
65W-11631-00-96	PAF25-05020100	193-199-219
65W-11631-00-96	PAF25-05020101	193-199
65W-11642-11	PAF25-05020301	193
65W-11665-00	PAF25-05020310	193
65W-12146-00	PAF25-05050008	193
65W-12151-00	PAF25-05050300	193
65W-12151-00	PAF25-05050301	193-199
65W-12171-10	PAF25-05050200	193
65W-12228-00	PAGB/T5783-M6X20	191
65W-13286-00	PAF25-05010107	191
65W-13300-00	PAF25-05050400	193
65W-14457-10	PAF25-05080004	268
65W-14901-12	PAF25-05070000	91
65W-15100-00-94	PAF25-05010000	191
65W-15121-00	PAF25-05000007	191
65W-15663-00	PAGBT3452.1-97.5X1.8	191
65W-24251-00	REC40145	82
65W-24251-10	REC40145	80
65W-41113-01-94	PAF25-05010112	191
65W-41114-00	PAF25-05010111	141-191
65W-42138-00	PAF15-01030100	131
65W-43800-00-4D	PAT40-10000000	124
65W-43800-01-4D	PAT40-10000000	124
65W-43800-02-4D	PAT40-10000000	124

R.O. / OEM	REF	
65W-43800-03-4D	PAT40-10000000	124
65W-43800-20-4D	PAT40-10000000	124
65W-43800-21-4D	PAT40-10000000	124
65W-43800-22-8D	PAT40-10000000	124
65W-43800-23-8D	PAT40-10000000	124
65W-43880-00	PAT40-10020500	123
65W-43880-01	PAT40-10020500	123
65W-44150-00	PAF25-04030000S	297
65W-44150-10	PAF25-04030000L	297
65W-44176-00	PAF25-04000012	297
65W-44328-00	PAF25-04000016	297
65W-44361-00	PAF25-02000004S	297
65W-44361-10	PAF25-02000004L	297
65W-45251-00	TEN01123	164-169
65W-45251-00	TEN01123AL	164-169
65W-45300-00-4D	PAF25-04090000S	295
65W-45300-01-4D	PAF25-04090000L	278
65W-45300-01-4D	PAF25-04090000S	278
65W-45300-10-4D	PAF25-04090000L	295
65W-45331-00-5B	PAF25-04000008	297
65W-46241-00	REC65W-46241-00	193-199-267
65W-61350-00	PAF25-07000300W	131
65W-81800-00	PH130-0029	111
65W-81800-01	PH130-0029	111
65W-81800-02	PH130-0029	111
65W-81800-03	PH130-0029	111
65W-81941-00	PH375-0034	111-114
65W-81941-00	PH375-0036	110
65W-82504-00	PAF15-07010103	103
65W-82575-01	REC65W-82575-01	120
65W-85510-10	PAF25-05140000	121
65W-85550-01	PAF25-05150000	109
65W-85570-01	PAF25-05120000	104
65W-85580-00	PAF25-05110000	107
65W-85790-00	PAF25-05010201	103
65W-W0001-00	REC65W-W0001-00	217
65W-W0001-02	REC65W-W0001-00	190-
65W-W0001-02	REC65W-W0001-00	218
65W-W0001-20	REC65W-W0001-20	145-297
65W-W0093-02	REC8542561	95-190-197
661-41262-01	PAF15-07000016	100
661-41262-02	PAF15-07000016	100
662-44352-01	CEF500321	143
662-44352-01	REC662-44352-01	143-347
663-11193-A0	REC663-11193-00	239-255
663-11411-01	REC663-11411-00	239-256
663-11561-00	REC663-11561-00	239
663-11633-00	REC663-11633-00	239-243-260-261-264
663-11634-00	REC663-11634-00	235-263
663-12414-A0	REC663-12414-00	138-239
663-12416-00	REC663-12416-00	235-239
663-13621-A0	REC663-13621-00	275
663-14198-A0	REC663-14198-00	275
663-14483-A0	REC663-14483-A0	275
663-14548-00	REC663-14548-00	99
663-14923-00	REC663-14923-00	99
663-24411-00	REC663-24411-00	87
663-41114-A0	REC663-41114-00	142-239
663-42138-00	REC663-42138-00	129
663-43118-01-4D	REC663-43118-01-4D	134
663-44144-01	REC663-44144-01	369-371
663-44151-00	REC663-44151-00	369-371
663-44311-02	REC663-44311-02	155-156-359-369
663-44311-02-00	REC663-44311-02	147
663-44315-A0	REC663-44315-A0	155-156- 357-359-369
663-44316-A0	REC663-44316-A0	357-359-369
663-44322-00	REC663-44322-00	154-155-156-357-359-369
663-44323-00	REC663-44323-00	149-155-156-357-359-369
663-44324-A0	REC663-44324-00	357-359-369
663-44341-00	REC663-44311-02	369
663-44366-00	REC663-44366-00	154-155-156-301-305-309-313-317-321-333-357-359-361-363-367-369-371-373-385
663-44367-00	PAT40-02000002	301-305-309-313-317-321-367-371
663-44551-02-8D	REC663-44551-02-8D	135
663-45123-00	REC663-45123-00	268
663-45331-00-94	REC663-45331-00-94	369-390
663-45375-00	REC663-45375-00	367
663-45376-00	REC663-45376-00	305-325-335-367
663-45376-00-94	REC663-45376-00	301-309-313-317-321-329
663-45510-01	REC663-45510-01	369-390
663-45552-00	REC663-45552-00	359-365-369
663-455576-00	REC663-45576-00	365
663-45567-01	PAT40-04000004-1	299-303-307-311

R.O. / OEM	REF	
663-45567-01-10	PAT40-04000004-1	365
663-45567-01-12	PAT40-04000004-2	365
663-45567-01-15	PAT40-04000004-3	365
663-45567-01-30	PAT40-04000004-5	365
663-45567-10	PAT40-04000004-2	299-303-307-311
663-45567-20	PAT40-04000004-3	299-303-307-311
663-45567-40	PAT40-04000004-5	299-303-307-311
663-45587-01	PAT40-04000003-1	301-305-309-313
663-45587-01-10	PAT40-04000003-1	367
663-45587-01-12	PAT40-04000003-2	367
663-45587-01-15	PAT40-04000003-3	367
663-45587-01-18	PAT40-04000003-4	367
663-45587-01-30	PAT40-04000003-5	367
663-45587-01-40	PAT40-04000003-6	367
663-45587-01-50	PAT40-04000003-7	367
663-45587-10	PAT40-04000003-2	301-305-309-313
663-45587-20	PAT40-04000003-3	301-305-309-313
663-45587-30	PAT40-04000003-4	301-305-309-313
663-45587-40	PAT40-04000003-5	301-305-309-313
663-45587-50	PAT40-04000003-6	301-305-309-313
663-45587-60	PAT40-04000003-7	301-305-309-313
663-45631-01	REC663-45631-00	359-363-365-369-389-390
663-45633-00	REC663-45633-00	359-361-363-365-369-389-390
663-45634-00	REC663-45634-00	303-307-311-359-363-365-369
663-45941-01-EL	SOL3311-110-17	402
663-45943-02-EL	SOL3311-110-15	402
663-45945-02-EL	SOL3311-111-13	402
663-45945-02-EL	SOL3331-111-13	402
663-45947-02-EL	SOL3311-116-11	402
663-45949-01-EL	SOL3311-110-16	402
663-45952-02-EL	SOL3311-114-12	402
663-45954-01-EL	SOL3331-119-10	402
663-45956-01-EL	SOL3311-121-09	402
663-45958-01-EL	SOL3311-111-14	402
663-45970-60-98	SOL3331-114-12	402
663-45972-60-98	SOL3331-116-11	402
663-45987-00	REC663-45987-00	365
663-45987-02	REC663-45987-00	299-303-307-311-359-361-369
663-45987-02	REC663-45987-00	405
663-48344-00	REC663-48344-00	127
663-85540-11	REC663-85540-15	119
663-85540-15	REC663-85540-15	119
663-W0078-00	REC663-W0078-01	368
663-W0078-01	REC663-W0078-01	152-368
663-W0078-A0	REC663-W0078-01	151-156
664-11325-00	TEN01166	225
664-41114-A0	REC664-41114-A0	140
664-41134-A0	REC664-41134-A0	268
664-44338-00	REC664-44338-00	289-291-293-353
664-44338-00	REC664-44338-00	154-155
664-45371-01	CM664-45371-01	357-359-361
664-45371-01	CM664-45371-01	169
664-45371-01	TEN01100	164-169
664-45371-01	TEN01100AL	164-169
664-45371-01-00	CM664-45371-01	353
664-45371-01A	CM664-45371-01	160
664-45371-01A	CM664-45371-01A	66-160-169
664-45384-00	REC664-45384-00	353-357
664-4556-50	PAF15-06000010-7	349
664-45567-01	PAF15-06000010-1	293
664-45567-01-10	PAF15-06000010-1	291-351
664-45567-05	PAF15-06000010-1	349
664-45567-10	PAF15-06000010-2	293
664-45567-12	PAF15-06000010-2	349
664-45567-20	PAF15-06000010-3	293
664-45567-30	PAF15-06000010-4	293
664-45567-30	PAF15-06000010-5	349
664-45567-40	PAF15-06000010-5	293
664-45567-50	PAF15-06000010-6	293
664-45567-60	PAF15-06000010-7	293
664-45631-01	REC664-45631-01	353
664-45631-02	PAF25-04060003	295
664-45631-02	REC664-45631-00	355-388-389
664-45941-01-EL	SOL3211-099-09	402
664-45945-00-EL	SOL3211-099-10	402
664-45947-01-EL	PAF25-04080000	295
664-45947-01-EL	SOL3211-099-11	402
664-45949-02-EL	SOL3211-099-13	402
664-45954-00-EL	SOL3211-099-12	402
664-45970-00-98	SOL3231-103-12	402
664-45972-00-98	SOL3231-105-11	402

R.O. / OEM	REF	
664-45987-00	REC664-45987-00	353
664-81970-60	REC6G1-81970-62	116
664-81970-61	REC6G1-81970-62	116
664-81970-62	REC6G1-81970-62	116
664-81970-63	REC6G1-81970-62	116
665L-13915-00	REC65L-13915-00	82
667-41114-A0	REC66T-41114-A0	233
667-45551-00	REC66T-45551-00	303
667-45571-00	REC66T-45571-00	303
667-45997-00	REC66T-45997-00	303-307-311
6689-W0001-C2	REC689-W0001-C2	145
66G1-81941-10	REC89-825096T01	114
66K-13907-00	REC66K-13907-00	86
66K-13907-00	REC6AW-14984-00	86
66K-13915-00	REC66K-13915-00	82
66K-14984-00	REC66K-14984-00	86-88
66K-45300-12-NA	REC421-A20	281
66K-45501-00	REC66K-45501-00	385
66M-11111-01-1S	PAF15-07040000	185
66M-11168-001S	PAF15-07010200	183
66M-11181-10	PAF15-07000100	185-215-218
66M-11191-00-1S	PAF15-07050001	185
66M-11325-00	CM15008	159
66M-11325-00	CM15008A	159
66M-11325-00	PAF15-07010008	183
66M-11325-00	TEN01151	163
66M-11327-00-94	PAF15-07010011	168-183-191-197-203-205-207
66M-11328-00	PAF15-07010009	65-66-67-68-69 183-191-197-203-205-207
66M-11328-00	PAGB/T97.1-8	193
66M-11351-10	PAF15-00000014	183-217
66M-11351-10	PAF15-00000014	233
66M-11351-10	PAF15-00000014	218
66M-11356-00	PAF15-07050002	185
66M-11356-00	PAGB/T97.1-8	191
66M-11357-00	PAF15-07010014	183
66M-11411-00	PAF15-07030000	183-219
66M-11416-00	PAF15-07010024	183
66M-11536-10	PAF15-07030003	185
66M-11537-00-94	PAF15-07040018	185
66M-11557-00	PAF15-07030004	185
66M-11631-00-96	PAF15-07020001	183-219
66M-11650-00	PAF15-07020100	183
66M-12111-00	PAF15-07040001	185
66M-12113-00	PAF15-07040005	185
66M-12116-00	PAF15-07040004	185
66M-12121-00	PAF15-07040002	185
66M-12138-60	PAF15-10030001	185
66M-12146-00	PAF15-07040015	185-189
66M-12151-10	PAF15-07040301	185
66M-12170-00	PAF15-07040200	185
66M-12411-00	PAF15-07000031	137
66M-12411-01	PAF15-07000031	137-179-180-183
66M-12535-00	PAF15-07010012	183-191-197-203-205-207
66M-13300-10	PAF15-07040500	185
66M-13329-10	PAF15-07040016	185
66M-14301-00	PAF15-07090000	91
66M-14301-00	PAF15-07090000W	91
66M-15100-02-1S	PAF15-07010000	183
66M-24410-11	PAF15-07140000	85
66M-41113-20-1S	PAF15-07010019	183
66M-41114-01	PAF15-07010018	65-140-183
66M-41138-00	PAF15-04010004	268
66M-44361-00	PAF15-02000005S	291
66M-44361-10	PAF15-02000005L	291
66M-44514-00-4D	PAF15-02010000	135
66M-44551-00-4D	PAF15-00000001	132
66M-44557-00	PAF15-00000003	135
66M-45113-00	PAF15-00000005	271
66M-45115-00	PAF15-03000003	268
66M-45300-02-4D	PAF15-06100000S	277-291
66M-45300-11-4D	PAF15-06100000L	277-291
66M-45371-00	CM66M-45371-00	159-169-291
66M-45371-00	TEN01136	65-164-169
66M-46241-00	REC66M-46241-00	185-267
66M-46297-00	PAF15-07000024	185
66M-81800-00	PH130-0084	110
66M-81800-01	PH130-0034	111
66M-81800-01	PH130-0084	110
66M-81800-02	PH130-0034	111
66M-81800-02	PH130-0084	110
66M-85520-00	PAF15-07000300	106
66M-85533-00	PAF15-07000400	104
66M-85540-10	PAF15-07000500	118
66M-85550-00	PAF15-07070000	109
66M-85550-10	PAF15-07070100W	109
66M-85570-00	PAF15-07000600	104
66M-85570-00	REC689-81311-40	105
66M-85580-00	PAF15-07000200	107
66M-W0001-01	REC66M-W0001-01	182-216-218

R.O. / OEM	REF	
66M-W0001-20	REC66M-W0001-20	144-290
66M-W0093-01	REC66M-W0093-01	95-182
66M-W009B-15-1S	PAF15-07000000	185
66N-11603-00	REC66N-11603-00	183-219
66T-11181-A0	REC66T-11181-00	249
66T-11181-A2	REC66T-11181-00	233-254
66T-11193-A0	REC66T-11193-A0	233-255
66T-11412-00	REC66T-11412-00	233-256
66T-11422-00	REC66T-11422-00	233-256
66T-11432-00	REC66T-11432-00	233-256
66T-11442-00	REC66T-11442-00	233-256
66T-11603-00	REC66T-11603-00	233-263-266
66T-11604-00	REC66T-11604-00	233-263
66T-11605-00	REC66T-11605-00	233-263
66T-11631-01-93	REC66T-11631-01K	233-263-266
66T-11635-01	REC66T-11635-01K	233-263
66T-11636-01	REC66T-11636-01K	233-263
66T-11681-00	REC66T-11681-00	233-260-261
66T-14301-60	REC66T-14301-60	92-93
66T-14384-01	REC66T-14384-01	94
66T-14536-01	REC66T-14536-01	94
66T-14992-00	REC66T-14992-00	99
66T-15713-00	REC66T-15713-00	112
66T-26301-00	REC66T-26301-00	130
66T-41114-A0	REC66T-41114-A0	141
66T-41133-A0	REC66T-41133-A1	269
66T-44311-00	PAT40-04000201	148-301-305
66T-44323-00	REC66T-44323-00	149-154-301-361
66T-44514-00-4D	REC66T-44514-00-4D	135
66T-45113-A0	REC66T-45113-A0	233-253-254
66T-45114-A0	REC66T-45114-A0	271
66T-45300-10-4D	PAF40-04000000L	279
66T-45311-13-8D	PAF40-04000000L	279
66T-45321-00	PAT40-04000007	301
66T-45344-01	PAT40-04000009	301-305-309
66T-45501-01	REC66T-45501-01	361-389
66T-45501-11	REC66T-45501-10	361-389-390
66T-45551-00	REC66T-45551-00	299-361-389-390
66T-45560-01	REC66T-45560-00	299-303-361-389-390
66T-45571-00	REC66T-45571-00	299-361-389-390
66T-45611-00	REC66T-45611-00	299-361-389-390
66T-45631-00	REC66T-45631-00	299-361-389-390
66T-45635-00	REC66T-45635-00	299-361
66T-45997-00	REC66T-45997-00	299-361-365-405
66T-82575-01	REC66T-82575-01	120
66T-85520-00	REC66T-85520-00	106
66T-85533-00	REC66T-85533-00	104
66T-85540-01	REC66T-85540-00-01	119
66T-85570-00	REC66T-85570-00	105
66T-85580-00	REC66T-85580-00	107
66T-W0001-01	REC66T-W0001-01	233-250-254
66T-W0001-20	REC66T-W0001-20	146-361
66T-W0078-00	REC66T-W0078-00	298-361
66T-W0078-01	REC66T-W0078-00	66-67-152-154
66T-W0093-01	REC66T-W0093-01	93-96-233
66W-11119-00	PAF25-05010106	191
670-44514-00	REC670-44514-00	135
670-45997-02	REC670-45997-00	359-369
676-11181-A2	REC676-11181-01	249-254
676-11325-00	TEN01166	166-233-235
676-11372-00	PAF15-04000005	173-179-181-183-195-213-225-227-229-231-233
676-12414-A0	REC676-12414-A0	233
676-12414-A1	REC676-12414-A0	138
676-13646-A0	REC676-13646-A0	274
676-14186-00	REC676-14186-00	99
676-14984-00	REC676-14984-00-00	94
676-14985-01	REC676-14985-01	100
676-41112-A0	REC676-41112-A0	142
676-41133-A0	REC676-41133-A0	269
676-43160-00	REC676-43160-02	132
676-43160-01	REC676-43160-02	132
676-43160-02	REC676-43160-02	132
676-44311-00	REC676-44311-00	148-156-363-367
676-44315-A0	REC676-44315-00	367
676-44315-A1	REC676-44315-00	156-363
676-44316-A1	REC676-44316-A1	363
676-44322-00	REC676-44322-00	156-367
676-44323-00	REC676-44323-00-40	149-156-367-363
676-44324-A0	REC676-44324-A0	367
676-44324-A1	REC676-44324-A0	363
676-44341-94	REC676-44341-00	363
676-44361-00	REC676-44361-00	367
676-44361-10	REC676-44361-10	367
676-44518-00	REC676-44518-00	135
676-45114-A1	REC676-45114-A1	271

R.O. / OEM	REF	
676-45127-00	**REC676-45127-00**	269
676-45128-00	**REC676-45128-00**	269
676-45251-00	**TEN01109**	163-169
676-45251-00	**TEN01127**	166-233-235
676-45314-00	**REC676-45314-00**	363
676-45361-01-94	**REC676-45361-00**	363-390
676-45501-10	**REC676-45501-10**	363-389-390
676-45533-00	**REC676-45533-00**	363
676-45587-00-70	**REC676-45587-00**	363
676-45587-00-75	**REC676-45587-00-75**	363
676-45587-00-80	**REC676-45587-00-80**	363
676-45635-00	**REC676-45635-00**	359-363-365
676-81800-10	**PH130-0007**	111
676-81970-00	**REC6G1-81970-62**	116
677-11181-A1	**REC677-11181-A0**	225-248-254
677-11412-02	**REC677-11412-02**	225-256
677-11422-02	**REC677-11422-02**	225-256
677-11432-02	**REC677-11432-02**	225-256
677-11442-02	**REC677-11442-02**	225-256
677-11631-00-97	**REC677-11631-00K**	225-262-266
677-11635-00	**REC677-11635-00K**	225-262
677-11636-00	**REC677-11636-00K**	225-262
677-11650-01	**REC677-11651-00**	260
677-13621-A1	**REC677-13621-00**	273
677-14198-A1	**REC677-14198-A1**	273
677-14227-01	**REC677-14227-00**	94
677-14343-68	**REC677-14343-68**	98
677-14384-01	**REC677-14384-01**	94
677-24434-02	**REC677-24434-02**	273
677-24435-01	**REC677-24435-01**	87
677-24471-01	**REC677-24471-01**	87
677-26301-02	**REC677-26301-02**	130
677-41112-A1	**REC677-41112-A0**	225
677-41114-A0	**REC677-41112-A0**	140
677-41114-A1	**REC677-41112-A0**	225-389
677-45113-A0	**REC677-45113-A0**	225-252-254
677-45251-00	**CM43107M**	169
677-45251-00	**CM6E0-45251-11**	347
677-W0093-00	**REC677-W0093-00**	95-225
679-14923-00	**REC679-14923-00**	99
679-14966-00	**REC676-14966-00**	100
679-44150-00	**REC679-44150-00**	367
679-44150-10	**REC679-44150-10**	367
679-44152-00	**REC679-44152-00**	367
679-44316-A0	**REC679-44316-A0**	367
679-44341-00-94	**REC679-44341-00**	367
679-44514-00-94	**REC679-44514-00-94**	135
679-45251-00	**CM679-45251-00**	160
679-45251-00	**CM679-45251-00A**	160
679-45315-A1	**REC679-45315-A1**	365
679-45321-02	**REC679-45321-02**	365
679-45331-00-94	**REC679-45331-00**	365
679-45371-00	**TEN01101**	164-169-365-369
679-45371-00	**TEN01101AL**	164-169
679-45501-10	**REC679-45501-10**	367-389
679-45536-00	**REC679-45536-00**	367
679-45560-00	**REC679-45560-00**	365-389
679-45571-00	**REC679-45571-00**	365
679-45611-01	**REC679-45611-00**	359-365-389-390
679-W0078-00	**REC679-W0078-A1**	151-156
67C-11181-01	**REC67C-11181-01**	197-215-218
67C-11351-01	**REC67C-11351-00**	197-207-218
67C-11356-00	**REC67C-11356-00**	197
67C-11537-01	**PAF40-05040006**	199
67C-11603-00	**REC67C-11603-00**	193-195-199-201-203-205-219
67C-11650-00	**PAF25-05020200**	193
67C-12111-00	**PAF25-05050001**	193-199
67C-15312-00	**PAF25-02010007**	271
67C-15312-00	**REC67C-15312-00**	271
67C-41114-00	**REC67C-41114-00**	141
67C-41114-10	**REC67C-41114-00**	197
67C-41133-00	**REC67C-41133-00**	268
67C-43880-00	**REC67C-43880-01**	122
67C-43880-01	**REC67C-43880-01**	122
67C-45113-00	**REC67C-45113-00**	271
67C-45123-00	**REC67C-45123-00**	268
67C-45251-00	**CM67C-45251-00**	158-169-361
67C-45251-00	**CM67C-45251-00A**	66-67-69-158-299-303-307-311
67C-45251-00	**TEN01132**	163
67C-45371-00	**CM67C-45371-00**	160-169
67C-45371-00	**CM67C-45371-00A**	66-67-68-69-160-169-299-303-307-311
67C-45501-00	**REC67C-45501-00**	301-305-389-390
67C-45501-10	**REC67C-45501-10**	301-305-389-390
67C-45633-00	**PAT40-04050005**	307-311
67C-81800-00	**PH130-0028**	110
67C-81800-01	**PH130-0028**	110

R.O. / OEM	REF	
67C-81800-02	**PH130-0028**	110
67C-W0001-00	**REC67C-W0001-01**	217
67C-W0001-01	**REC67C-W0001-01**	197-217
67C-W0001-01	**REC67C-W0001-01**	218
67C-W0001-20	**REC67C-W0001-20**	298
67D-11181-A0	**PAF4-04000014**	175-215-218
67D-11191-00	**PAF4-04000018**	175
67D-11400-00	**PAF4-04030000**	175-219
67D-11650-00	**PAF4-04020100**	175
67D-11654-00	**PAF4-04020103**	175
67D-12111-00	**PA166F-010001**	173-180
67D-12111-00	**PAF4-04080005**	175
67D-12121-00	**PA166F-010002**	173
67D-12121-00	**PAF4-04080006**	175-180
67D-12151-00	**PA166F-010009**	173-175-179
67D-12154-00	**PAF4-04000015**	175
67D-12157-00	**PA166F-010008**	173-175-179
67D-12413-00-1S	**PAF4-04070001**	175
67D-14301-03	**PAF4-04140000**	91
67D-24410-03	**PAF4-04090000**	85
67D-24610-00	**PAF4-04120100**	75
67D-24610-02	**PAF4-04120100**	75
67D-24610-03	**PAF4-04120100**	75
67D-24610-04	**PAF4-04120100**	75
67D-44366-00	**PAF4-03000021**	285-287
67D-45113-A0	**PAF4-00000006**	175-217-218
67D-45560-00	**PAF4-03010000**	285-287-387
67D-45570-00	**PAF4-03040000**	285-287-387
67D-45631-01	**PAF4-03030002**	285-287
67D-45635-00	**PAF4-03000008**	285-287
67D-85640-00	**PAF4-04000038**	106
67D-W0093-00	**REC67D-W0093-00**	95-177
67F-11181-02	**REC67F-11181-03**	209
67F-11181-03	**REC67F-11181-03**	215-218
67F-11325-00	**CM67F-11325-00**	159
67F-11325-00	**TEN01146**	163
67F-11325-01	**CM67F-11325-01**	161
67F-11325-01	**CM67F-11325-01A**	70-71-72-73-161-211-213
67F-11325-01	**TEN01146-1**	163
67F-11328-00	**REC67F-11328-00**	209-211-214
67F-12411-00	**REC67F-12411-01**	137
67F-12411-01	**REC67F-12411-01**	69-70-71-72-73-137-209-211-213
67F-14371-01	**REC67F-14371-01**	101
67F-24251-02	**REC40165**	80-81-82
67F-41134-A0	**REC67F-41134-A0**	269
67F-41138-00	**REC67F-41138-00**	269
67F-4380R-00	**REC48630-94900**	125
67F-4380R-01	**REC48630-94900**	125
67F-43811-00	**REC48630-94900**	125
67F-43880-00	**PH200-T044**	123
67F-44311-00	**REC67F-44311-01**	321
67F-44311-01-00	**REC67F-44311-01**	148-154-155
67F-44322-00	**REC67F-44322-00**	321-154-155
67F-44323-00	**REC67F-44323-00**	149-154-155-321
67F-44352-00	**CEF500364**	143
67F-44352-00	**REC67F-44352-00**	143-321-154-155
67F-45113-00	**REC67F-45113-00**	272
67F-45123-00	**REC67F-45123-00**	269
67F-45127-00	**REC67F-45127-00**	269
67F-45331-00-94	**REC67F-45331-00-CA**	319
67F-45371-00	**CM67F-45371-00**	70-161
67F-45371-00	**CM67F-45371-00A**	68-69 -161-315-319
67F-45371-00	**TEN01140**	165
67F-45371-00	**TEN01141**	165-169
67F-45371-00	**TEN01141AL**	165-169
67F-45501-10	**REC67F-45501-10**	321-391
67F-45560-00	**REC67F-45560-00**	319-390-391
67F-45570-00	**REC67F-45570-00**	391
67F-45576-00	**REC67F-45576-00**	315-319
67F-45611-01	**REC67F-45611-01**	315-319-391
67F-45997-00	**REC67F-45997-00**	315-319-371-405
67F-46241-00	**REC67F-46241-00**	209-267
67F-81800-01	**PH130-0055**	112
67F-81800-02	**PH130-0055**	112
67F-81800-03	**PH130-0055**	112
67F-81800-04	**PH130-0055**	112
67F-81960-00	**REC67F-81960-12**	116
67F-85570-00	**REC67F-85570-00**	105
67F-W0001-00	**REC67F-W0001-00**	217
67F-W0001-01	**REC67F-W0001-00**	209-218
67F-W0001-20	**REC67F-W0001-20**	145-318
67F-W0078-00	**REC67F-W0078-00**	69-70-152-154-155-318
67F-W0093-00	**REC67F-W0093-00**	97-209
67F11416-00	**REC67F-11416-00**	209
67F11416-10	**REC67F-11416-10**	209
67F11416-20	**REC67F-11416-20**	209
67H-11411-00	**REC67H-11411-00**	256

R.O. / OEM	REF	
67H-13907-00	**REC67H-13907-00**	86
67H-13907-00	**REC6AW-14984-00**	86
67H-43880-00	**PH200-T057**	123
67H-8592A-01	**REC67H-8592A-01**	103
680-WE090-11-15	**PAF4-04000000**	175
682-11325-00	**TEN01162**	166-227
682-11351-A0	**REC682-11351-A0**	253
682-11412-00	**REC682-11412-00**	256
682-11422-00	**REC682-11422-00**	256
682-11432-00	**REC682-11432-00**	256
682-11442-00	**REC682-11442-00**	256
682-11610-00	**REC682-11610-01**	262
682-11610-01	**REC682-11610-01**	227-266
682-11610-11	**REC682-11610-11**	227-262
682-11610-21	**REC682-11610-21**	227-262
682-11681-00	**REC682-11681-00**	227-260
682-12413-00-1S	**REC682-12413-00-1S**	139-227
682-12413-00-9M	**REC682-12413-00-1S**	139
682-12414-A1	**REC682-12414-A1**	138-139-227
682-13621-A0	**REC682-13621-00**	273
682-41112-A1	**REC682-41112-00**	140
682-41114-A1	**REC682-41114-00**	140
682-41133-A0	**REC682-41133-A0**	268
682-41237-50	**REC682-41237-50**	133
682-42137-00	**REC682-41237-00**	133
682-44147-00	**REC682-44147-00**	349-357
682-44176-00	**REC682-44176-00**	349
682-44312-00	**REC682-44312-00**	349
682-44315-00	**REC682-44315-00**	154-155-156-349
682-44322-00	**REC682-44322-00**	154-155-156-349
682-44323-00	**REC682-44323-40**	154-155-156-349
682-44328-00	**REC682-44328-00**	349
682-44352-00	**REC682-44352-01**	349
682-44352-03	**CEF500320**	143
682-44352-03	**REC682-44352-01**	143
682-44352-03	**REC682-44352-01**	154-155-156
682-44361-01	**REC682-44361-01**	349
682-44361-10	**REC682-44361-10**	349
682-44365-00	**REC682-44365-00**	154-155-156-349
682-44514-01-94	**REC682-44514-01-94**	135
682-44555-30	**PAF15-00000002**	135
682-45113-02	**REC682-45113-A0**	254-271
682-45251-00	**TEN01128**	166
682-45376-01	**REC682-45376-01**	349
682-45631-00	**REC682-45631-00**	291-293-349-351-387-388
682-81800-10	**PH130-0061**	110
682-81800-11	**PH130-0061**	110
682-81800-12	**PH130-0061**	110
682-82556-00	**PAF4-01090401**	120
682-W0078-A1	**REC682-W0078-A1**	150-154-155-156-348
683-44361-01	**REC683-44362-01**	349
683-44365-01	**REC683-44365-01**	349
683-44373-00	**REC683-44373-00**	349
683-45315-00	**REC683-45315-A0**	349
683-45361-00-EJ	**REC683-45361-01-4D**	349
683-45361-02-4D	**REC683-45361-01-4D**	291-351
683-45361-02-8D	**PAF15-06080000**	293
683-45361-02-8D	**REC683-45361-01-4D**	293
683-45361-02-8D	**REC683-45361-02-4D**	387-388
683-45611-00	**REC683-45611-00**	291-293-349-351-387-388
683-45941-00-00	**SOL3111-093-12**	402
683-45942-00-EL	**SOL3111-093-10**	402
683-45943-00-EL	**SOL3111-093-11**	402
683-45945-00-EL	**SOL3111-093-09**	402
683-45947-00-EL	**SOL3111-093-08**	402
683-W0001-21	**REC683-W0001-21**	348
683-W0001-C1	**REC683-W0001-21**	144
688-11111-02-1S	**REC688-11111-02-1S**	243
688-11181-A1	**REC688-11181-A1**	243
688-11181-A2	**REC688-11181-A1**	249
688-11181-A2	**REC688-11181-A1**	254
688-11193-A1	**REC688-11193-A1**	243-255
688-11325-00	**CM85007**	160
688-11325-00	**CM85007A**	160
688-11325-00	**TEN01147**	163-237-243
688-11370-01	**REC688-11370-00**	237-241-243
688-11411-01	**REC688-11411-00**	243-256
688-11603-A0	**REC688-11603-A0**	239-243-264-266
688-11605-A0	**REC688-11605-A0**	239-243-264
688-11610-02	**REC688-11610-02**	264-266
688-11631-02-95	**REC688-11631-02K**	264-266
688-11631-03-94	**REC688-11631-03K**	239-243-264
688-11631-81-96	**REC688-11631-81K**	264-266
688-11634-00	**REC688-11634-00**	229-239-243-263-264
688-11634-10	**REC688-11634-00**	241
688-11635-03	**REC688-11635-03K**	239-264
688-11635-03	**REC688-11636-03K**	264

R.O. / OEM	REF	
688-11636-03	REC688-11636-03K	239
688-11650-03	REC688-11650-03	239-243-264
688-11651-00	REC688-11651-00	261
688-12411-10	REC6E5-12411-30	243
688-12413-00-1S	REC688-12413-00-1S	139-243
688-12414-A1	REC688-12414-A1	138-139-243-245-247
688-12416-00	REC688-12416-00	139-243
688-13610-00	REC688-13610-00	99
688-13621-A1	REC688-13621-A1	274
688-14198-A2	REC688-14198-A1	274
688-14416-01	REC688-14416-01	274
688-14483-A0	REC688-14483-A0	274
688-14548-00	REC688-14548-00	99
688-14947-00	REC688-14947-00	98
688-24378-00	PAF15-05000011	183-191-195-197-207
688-41112-A0	REC688-41112-A0	142-243
688-41114-A0	REC688-41114-A0	142-243
688-41134-A0	REC688-41134-00	269
688-41211-00	REC688-41211-01	132
688-41211-01	REC688-41211-01	132
688-41217-00	REC688-41217-00	101
688-43160-01	REC688-43160-01	132
688-43880-11	PH200-T037	123
688-44120-11	REC688-44120-12	134
688-44120-12	REC688-44120-12	134
688-44120-22	REC688-44120-22	134
688-44311-01	REC688-44311-01	148-156-371
688-44311-01-00	REC688-44311-01	373
688-44315-A0	REC688-44315-00	154-155-156-321-371
688-44315-A0-00	REC688-44315-00	373
688-44316-A0	REC688-44316-00	321-371
688-44316-A0-00	REC688-44316-00	373
688-44322-00	REC688-44322-00	156-371
688-44322-00-00	REC688-44322-00	373
688-44323-00	REC688-44323-00	156-371
688-44323-00-00	REC688-44323-00	149-373
688-44324-A0	REC688-44324-00	321-371
688-44324-A0-00	REC688-44324-00	373
688-44341-01-94	REC688-44341-01	371-373
688-44352-03	CEF500323	143
688-44352-03	REC688-44352-03	143-156-371
688-44352-03-00	REC688-44352-03	373
688-44361-10	REC688-44361-10	371
688-44514-00	REC688-44514-00	135
688-44555-00	REC688-44555-00	135
688-45113-A0	REC688-45113-A0	243-253-254
688-45114-A1	REC688-45114-A1	272
688-45123-00	REC688-45123-00	269
688-45214-02	REC688-45214-02	323-365
688-45215-02	REC688-45215-02	323-365
688-45251-01	CM688-45251-01	158-169
688-45251-01	CM688-45251-01A	67-68-69-158-169
688-45251-01	TEN01110	163-169
688-45331-00-94	REC688-45331-00-94	371-373-388-390-391
688-45341-00	REC688-45341-00	295-359-375
688-45341-00-00	REC688-45341-00	373
688-45341-10	REC688-45341-00	299-303-307-311-315-319-323-327-331-335-337-341-355-361-363-369-370-379
688-45371-02	CM688-45371-02	371
688-45371-02	CM688-45371-02	160-169
688-45371-02	TEN01104	164-169
688-45371-02	TEN01104AL	164-169
688-45371-02-00	CM688-45371-02	373
688-45375-00	REC688-45375-00	329-371
688-45383-02	REC688-45383-01	315-319-323-371-375
688-45383-02-00	REC688-45383-01	373
688-45384-00	REC688-45384-00	371-375
688-45384-00-00	REC688-45384-00	373
688-45384-02	REC688-45384-00	315-319-323
688-45501-10	REC688-45501-10	390-391
688-45501-11	REC688-45501-11	371-390-391
688-45536-01	REC688-45536-01	317-321
688-45551-01	REC688-45551-00	371-390-391
688-45551-01-00	REC688-45551-00	373
688-45560-00	REC688-45560-00	371-390-391
688-45560-00-00	REC688-45560-00	373
688-45567-01	PAT85-040000004-B	315-319
688-45571-01	REC688-45570-00	371
688-45571-01	REC688-45571-00-00	390-391
688-45587-01	PAT85-040000003-B	317-321
688-45611-00	REC688-45611-00	371-390-391
688-45631-01	REC688-45631-00	371-390-391
688-45633-00	REC688-45633-00	315-319-371-390-391
688-45633-00-00	REC688-45633-00	373
688-45634-00	REC688-45634-00	371
688-45635-00	REC688-45635-00	369-371

R.O. / OEM	REF	
688-45930-02-98	SOL3431-133-17	402
688-45970-03-98	SOL3431-130-19	402
688-45972-02-98	SOL3431-130-21	402
688-45978-60-98	SOL3431-135-15	402
688-45987-01	REC688-45987-00	315-319-371-405
688-45987-01-00	REC688-45987-00	373
688-45997-00	REC688-45997-00	383
688-45997-01	REC688-45997-00	323-327-331-335-337-375-379-405
688-45997-01-00	REC688-45997-00	373
688-81800-10	PH130-0058	111
688-81800-11	PH130-0058	111
688-81800-12	PH130-0058	111
688-81950-10	REC688-81950-10	111-114
688-82560-10	REC688-82560-10	103
688-82575-01	REC688-82575-01	120
688-82586-21	PAF15-13000100W	129
688-8258A-10	REC688-8258A	129
688-8258A-20	PAT85-08010100	129
688-8258A-30	REC688-8258A-30	129
688-85510-00	REC688-85510-01	121
688-85510-01	REC688-85510-01	121
688-85510-10	REC688-85510-10	121
688-85510-11	REC688-85510-10	121
688-85540-00	REC688-85540-00	117
688-85540-16	REC688-85540-16	120
688-W0001-02	REC688-W0001-A0	243
688-W0001-20	REC688-W0001-20	146
688-W0001-20-00	REC688-W0001-22	373
688-W0001-22	REC688-W0001-22	146-370
688-W0001-A0	REC688-W0001-A0	251-254
689-11181-A2	REC689-11181-00	248-254
689-11325-00	CM3082523	158
689-11325-00	CM689-11325-00A	158
689-11325-00	TEN01121	167-229
689-11610-01	REC689-11610-00	263-266
689-11631-00-95	REC689-11631-00K	263-266
689-11633-00	REC689-11633-00	229-260-263
689-11651-00	REC689-11651-00	229-260-261
689-11681-01	REC689-11681-00	229-260-261
689-15396-01-5B	REC689-15396-01-CA	229
689-15755-00	REC689-15755-00	134
689-41112-A0	REC689-41112-A0	141
689-41114-A0	REC689-41114-A0	141
689-44311-03	REC689-44311-00	147-155-353
689-44315-A0	REC689-44315-A0	353
689-44316-A0	REC689-44316-A0	353
689-44323-03	REC689-44323-00	155-353
689-44324-A0	REC689-44324-A0	155-353
689-44352-02	CEF500326	143
689-44352-02	REC689-44352-02	143-155-353
689-44366-00	REC689-44366-00	155-353-355
689-45113-A1	REC61T-45113-A0	229
689-45501-10	REC689-45501-10	353-388-389
689-45551-00	REC689-45551-00	353-388-389
689-45560-00	REC689-45560-00	353-388-389
689-45570-00	REC689-45571-00-00	353-388-389
689-45611-00	REC689-45611-00	353-388-389
689-45997-00	REC689-45997-00	295-353-355-357-405
689-81800-10	PH130-0049	110
689-81800-11	PH130-0049	110
689-81800-12	PH130-0049	110
689-81800-13	PH130-0049	110
689-85540-20	REC689-85540-21	119
689-85540-21	REC689-85540-21	119
689-W0001-20	REC689-W0001-20	145
689-W0001-21	REC689-W0001-21	145-353
689-W0078-04	REC689-W0078-04	151-155
689-W0078-A6	REC689-W0078-A6	151-155-353
689-W0093-02	REC689-W0093-02	95
689-W4432-02	REC689-W4432-01	155-156-353
68D-11351-A0	PAF4-04000002	177-270
68D-24610-10	PAF4-04120100	75
68D-65300-03-4D	PAF4-0310000S	277
68D-65300-11-4D	PAF4-0310000L	277
68D-E1111-10-1S	PAF4-04080101	175
68D-E1168-00	PAF4-04000010	177
68D-E1169-A0	PAF4-04000009	177
68D-E1193-A0	PAF4-04000017	175
68D-E1311-02-15	PAF4-04010100	177
68D-E1325-00	PAF4-04070003	64-65-66-67-68-69-70-71-173-175-179
68D-E1603-00	REC68D-E1603-00	175-219
68D-E1631-00-96	PAF4-04020001	175
68D-E1631-00-96	PAF4-04020200	175-219
68D-E1633-00	PAF4-04020005	175-219
68D-E2113-00	PAF4-04080008	173-175
68D-E2155-00	PAF4-04080009	175
68D-E2170-00	PAF4-04040000	175
68D-E2413-00-1S	PAF4-04070000	179
68D-E2413-001S	PAF4-04070100	175

R.O. / OEM	REF	
68D-E2414-A0	PAF4-04000011	64-138-173-175-179
68D-E3102-00	PAF4-04050100	177
68D-E5111-00-1S	PAF4-04050200	177
68D-E5346-00	PAF4-04010003	177
68D-E5362-00	PAF4-04000007	177
68D-E5362-00	PAF4-04000010	179
68D-E5362-00	PAGB/T5783-M5X12	183
68D-E5396-00-5B	PAF4-04060001	177-179
68D-G2177-10	PAF4-01090300	134
68D-G4150-00	PAF4-03020000S	285
68D-G4150-10	PAF4-03020000L	285
68D-G4311-01	PAF4-03000019	147-285
68D-G4315-A0	PAF4-03000018	285
68D-G4328-00	PAF4-03000020	285-287
68D-G4360-00	PAF4-02040001S	285
68D-G4360-10	PAF4-02040001	285
68D-G4365-00	PAF4-02040002	283-285
68D-G5251-00	CM6L5-45251-02A	287
68D-G5251-00	PAF4-03000022	64-283-285
68D-G5300-00-4D	PAF4-0310000S	285
68D-G5300-10-4D	PAF4-0310000L	285
68D-G5300-11-4D	PAF4-03000001	285
68D-G5315-A0	PAF4-03000011	285-287
68D-G5321-00	PAF4-03000012	285-287
68D-G5361-00-4D	PAF4-03050001	285-287
68D-G5511-00	PAF4-03000004S	287
68D-G5511-10	PAF4-03000004L	287
68D-G5978-00	PAF4-03000025	283
68D-G5987-00	PAF4-03000025	285-287
68F-11181-00	REC68F-11181-00	249-254
68F-11193-02	REC68F-11193-02	255
68F-11381-00	REC68F-11381-00	276
68F-13440-00	REC68F-13440-00	83
68F-13907-01	REC68F-13907-01	86
68F-13915-00	REC68F-13915-00	82
68F-24563-00	REC68F-24563-00	81
68F-24563-10	REC68F-24563-10	81
68F-41114-00	REC68F-41114-00	142
68F-45113-01	REC68F-45113-01	253-254
68F-81800-00	PH130-0056	111
68F-81800-01	PH130-0056	111
68F-81800-03	PH130-0056	111
68F-8195A-00	REC68F-8195A-00	115
68F-83688-00	REC68F-83688-00	90-102
68F-83688-10	REC68F-83688-10	90-102
68F-8592A-00	REC68F-8592A-00	103
68F-W0001-01	REC68F-W0001-01	252-254
68N-81940-00	PH375-0042	114
68T-11325-00	CM68T-11325-00	161
68T-11325-00	CM68T-11325-00A	71-72-73-161-211
68T-11325-00	TEN01163	166
68T-12116-00	PAF4-04080007	175-179-180
68T-13475-00	REC68T-13475-00	271
68T-24251-00	REC68T-24251-00	64-65-80-81-82
68T-24251-01	REC68T-24251-00	80
68T-24410-00	REC68T-24410-00-00	85
68T-24410-01	REC68T-24410-00-00	85
68T-44323-00	REC68T-44323-00	149-154-289-293
68T-44352-00	CEF500368	143
68T-44352-00	REC68T-44352-00	143-154-289
68T-44366-00	REC68T-44366-00	154-289
68T-45251-00	CM68T-45251-00	158-169
68T-45251-00	CM68T-45251-00A	64-65-158-169-289
68T-45251-00	TEN01142	163-169
68T-46241-00	REC68T-46241-00	267
68T-85540-00	REC68T-85540-00	118
68T-W0001-20	REC68T-W0001-20	144-289
68T-W0078-00	REC68T-W0078-00	150-289
68T-W0078-01	REC68T-W0078-00	64-65-150-154
68V-11325-01	CM68V-11325-01	158
68V-11325-01	CM68V-11325-01A	158
68V-11325-01	TEN01156-1	167
68V-11325-01	TEN01156/1AL	167
68V-11325-02	CM68V-11325-01A	209
68V-11325-02	TEN01156	72-167
68V-11325-02	TEN01156AL	72-167
68V-11351-00	REC68V-11351-00	209-218
68V-12111-00	REC68V-12111-00	209
68V-13761-00	REC68V-8A360-00	89
68V-13761-10	REC68V-13761-10	90
68V-13907-00	REC68V-13907-00	86
68V-13907-01	REC68V-13907-00	86
68V-13907-02	REC68V-13907-00	86
68V-13907-03	REC68V-13907-00	86
68V-13907-04	REC68V-13907-00	86
68V-13915-00	REC68V-13915-00	72-82
68V-14984-00	REC68V-14984-00	72-86-88
68V-15312-00	REC68V-15312-00	272
68V-24410-00	REC68V-24410-00	85
68V-24560-00/01	REC6D8-24560-08	80-81

R.O. / OEM	REF	
68V-24563-00	**REC68V-24563-00**	68-80-81-82
68V-43880-03-40	**REC18-6865**	124
68V-43880-03-40	**REC63P-43800-20**	124
68V-45501-10	**REC68V-45501-10**	325
68V-81800-00	**PH130-0057**	111
68V-81800-01	**PH130-0057**	111
68V-81800-02	**PH130-0057**	111
68V-8194A-00	**PH375-0042**	114
68V-81950-00	**REC68V-81950-00**	115
68V-81960-00	**REC881346T**	117
68V-82380-00	**REC68V-82380-00**	90-102
68V-85885-00	**REC68V-85885-00**	90-102
68V-8A360-00	**REC68V-8A360-00**	89-90
68V-W0001-20	**REC68V-W0001-20**	147-322
68V-W0078-00	**REC68V-W0078-00**	70-71-152-155-322
68W-43880-03	**PH200-T057**	123
692-14590-00	**REC692-14590-01**	98
692-14590-01	**REC692-14590-01**	98
692-14923-00	**REC692-14923-00**	98
692-24410-00	**REC692-24410-00**	85
692-24411-00	**REC692-24411-00**	87
692-26301-00	**REC692-26301-03**	130
692-26301-01	**REC692-26301-03**	130
692-26301-02	**REC692-26301-03**	130
692-26301-03	**REC692-26301-03**	130
692-41256-00	**REC692-41256-00**	101
692-44120-21	**REC692-44120-22**	134
692-44120-22	**REC692-44120-22**	134
692-45300-12-4D	**REC692-45300-16-8D**	280
692-45300-13-4D	**REC692-45300-16-8D**	280
692-45300-14-4D	**REC692-45300-16-8D**	280-370
692-W0078-00	**REC692-W0078-02**	152
692-W0078-00-00	**REC692-W0078-02**	373
692-W0078-01	**REC692-W0078-02**	152
692-W0078-01-00	**REC692-W0078-02**	373
692-W0078-02	**REC692-W0078-02**	152-156-370
695-11181-A1	**REC695-11181-00**	248-254
695-85540-11	**REC695-85540-11**	119
695-85540-12	**REC695-85540-11**	119
695-W0001-01	**REC695-W0001-A2**	250-254
696-14590-01	**REC696-14590-01**	98
696-45113-00	**REC696-45113-00**	239
696-45113-A0	**REC696-45113-00**	253-254
696-85540-10	**REC696-85540-12**	119
696-85540-11	**REC696-85540-12**	119
696-85540-12	**REC696-85540-12**	119
696-W0093-00	**REC696-W0093-00**	239
696-W0093-01	**REC84419M**	96
696-W0093-02	**REC696-W0093-00**	96
696-W0093-02	**REC84419M**	96
697-11181-A2	**REC697-11181-A1**	239-249-254
697-44352-00	**REC6H3-44352-00**	369
697-45114-A0	**REC697-45114-00**	254-271
697-45384-00	**REC697-45384-00**	359-365-369
697-45551-00	**REC697-45551-00**	369-390
697-45560-00	**REC697-45560-00**	369-390
697-45571-00	**REC697-45570-00**	369
697-45571-00	**REC697-45571-00-00**	390
697-45611-00	**REC697-45611-00**	369-388-390
697-81800-10	**PH130-0007**	111
697-81800-11	**PH130-0007**	111
697-81800-12	**PH130-0007**	111
697-85570-00	**REC697-85570-00**	105
697-85570-11	**REC697-85570-10**	105
697-W0001-02	**REC697-W0001-02**	239
697-W0001-A0	**REC697-W0001-02**	251-254
698-W0001-21	**REC698-W0001-21**	145-368
69D-45501-10	**REC69D-45501-10**	390
69D-W0001-20	**REC69D-W0001-20**	146
69G-45315-A0	**PAF20-04000001**	292
69G-45331-01-CA	**PAF20-04010001**	292
69G-45510-10	**REC69G-45510-10**	387
69G-45510-20	**REC69G-45510-20**	387
69G-W0001-20	**REC69G-W0001-20**	144-289
69G-W0078-00	**REC69G-W0078-01**	150
69G-W0078-01	**REC69G-W0078-01**	150
69J-11181-03	**REC69J-11181-03**	216-218
69J-11182-03	**REC69J-11182-03**	216-218
69J-11351-11	**REC69J-11351-11**	213-218
69J-12111-00	**REC69J-12111-00**	211
69J-12119-00	**REC69J-12119-00**	211
69J-13440-00	**REC35-822626Q15**	83
69J-13440-01	**REC35-822626Q15**	83-211-213
69J-13440-03	**REC35-822626Q15**	71-72-73-83
69J-13645-A1	**REC69J-13645-00**	273
69J-13761-00	**REC69J-13761-00**	90
69J-13906-00	**REC69J-13906-00**	89-90
69J-13907-00	**REC69J-13907-03**	86
69J-13907-01	**REC69J-13907-03**	86
69J-13907-02	**REC69J-13907-03**	86
69J-13907-03	**REC69J-13907-03**	86
69J-13907-04	**REC69J-13907-03**	86
69J-15451-00	**REC69J-15451-00**	213
69J-15451-A1	**REC69J-15451-00**	273
69J-24410-00	**REC69J-24410-02**	86
69J-24410-01	**REC69J-24410-02**	86
69J-24410-02	**REC69J-24410-02**	86
69J-24501-10	**REC69J-24501-10**	71-72-81
69J-24502-00	**REC69J-24502-00**	81
69J-41134-A0	**REC69J-41134-A0**	270
69J-41135-A0	**REC69J-41135-A0**	270
69J-41138-00	**REC69J-41138-00**	270
69J-43880-00	**PH200-T069**	123
69J-43880-01	**PH200-T069**	123
69J-45123-00	**REC69J-45123-00**	270
69J-45300-21-8D	**REC421-B25F**	279
69J-45300-22-8D	**REC421-B25F**	331
69J-45300-32-8D	**REC421-B30F**	279
69J-45361-00-8D	**REC69J-45361-00-8D**	331-383
69J-45375-00	**REC69J-45375-00**	331-383
69J-45611-00	**REC69J-45611-00**	331-337-392
69J-45631-00	**REC69J-45631-00**	331-337-392
69J-46241-00	**REC69J-46241-00**	267
69J-81800-00	**PH130-0074**	112
69J-81800-01	**PH130-0074**	112
69J-81960-10	**REC69J-81960-13**	116
69J-81960-11	**REC69J-81960-13**	116
69J-81960-12	**REC69J-81960-13**	116
69J-81960-13	**REC69J-81960-13**	116
69J-85885-00	**REC69J-85885-00**	90-102
69J-W0001-20	**REC64J-W0001-20**	146
69J-W0001-20	**REC69J-W0001-20-00**	147-333
69K-45300-21-8D	**REC428-B25F**	279
69K-45300-34-8D	**REC428-B30F**	279
69K-45611-00	**REC69K-45611-00**	331-337
69L-11181-00	**REC61A-11181-A0**	249-254
69L-11635-00-85	**REC69L-11631-00K**	267
69L-11642-00-85	**REC69L-11642-00**	267
69L-45371-00	**CM69L-45371-00**	160-169
69L-45371-00	**CM69L-45371-00A**	160-169
69L-45371-00	**TEN01145**	168-169
69L-81800-00	**PH130-0059**	110
69M-11181-00	**PAF2.6-04000001**	173-215-218
69M-11193-A0	**PAF2.6-04000005**	173
69M-11351-A0	**PAF2.6-04000004**	171-270
69M-11400-00	**PAF2.6-04030000**	173-219
69M-11650-00	**PAF2.6-04020100**	173
69M-12154-00	**PAF2.6-04000002**	173
69M-12170-01	**PAF2.6-04000100**	173
69M-12411-00	**REC6AH-12411-00**	136
69M-12411-01	**REC6AH-12411-00**	136-173-175
69M-14301-21	**PAF2.6-04000200**	91
69M-15361-00	**PAF2.6-04010102**	171
69M-24575-00	**PAF2.6-00000004**	76
69M-44361-00	**PAF2.6-02000003S**	283
69M-44361-10	**PAF2.6-02000003L**	283
69M-45113-A0	**PAF2.6-00000003**	173-217-218
69M-65300-01-4D	**PAF2.6-03020000S**	277
69M-65300-11-4D	**PAF2.6-03020000L**	277
69M-85640-00	**PAF2.6-04000600**	106
69M-E1111-00-1S	**PAF2.6-04040100**	173
69M-E1191-00-1S	**PAF2.6-04000006**	173
69M-E1311-00-1	**PAF2.6-04010100**	171
69M-E1603-01	**REC69M-E1603-01**	173-219
69M-E1631-01-96	**PAF2.6-04020001**	173-219
69M-E1633-00	**PAF2.6-04020005**	173-219
69M-E2155-00	**PAF2.6-04040001**	173
69M-E2413-00-1S	**PAF2.6-04000501**	173
69M-E3102-00	**PAF2.6-04050100**	171
69M-E5111-00-1S	**PAF2.6-04050001**	171
69M-E5363-00	**PAF15-07050004**	171-180
69M-E5396-00	**PAF2.6-04060001**	171
69M-E5396-00-5B	**PAF2.6-04060000**	171
69M-G2743-00	**PAF2.6-04000008**	171
69M-G4311-00	**PAF2.6-03000014**	147-154-283
69M-G4323-00	**PAF2.6-03000010**	148-154-283
69M-G4328-00	**PAF2.6-03000016**	283
69M-G5300-00-4D	**PAF2.6-03020000S**	283
69M-G5300-01-4D	**PAF2.6-03020000L**	283
69M-G5311-00-4D	**PAF2.6-03000001**	283
69M-G5315-A0	**PAF2.6-03000007**	283
69M-G5321-00-94	**PAF2.6-03000008**	283
69M-G5361-00-4D	**PAF2.6-03000300**	283
69M-G5361-00-4D	**PAF2.6-03000301**	283
69M-G5511-00	**PAF2.6-03000011S**	283
69M-G5511-10	**PAF2.6-03000011L**	283
69M-G5635-00	**PAF2.6-03000020**	283
69M-WE0090-01-1S	**POWERHEAD2.6**	173
69P-11412-00	**REC6G0-11412-00**	229-256
69P-11422-00	**REC6G0-11422-00**	229-256
69P-11432-00	**REC6G0-11432-00**	229-256
69P-11442-00	**REC6G0-11442-00**	229-256
69P-85541-09	**REC69P-85541-09**	107
69W-43880-00	**PH200-T036**	122
69W-43880-01	**PH200-T036**	122
69W-45300-00-4D	**PAF60-04000000**	278
69W-45300-00-8D	**PAF60-04000000**	278
69W-45300-01-8D	**PAF60-04000000**	278
69W-45300-04-8D	**PAF60-04000000**	311
69W-45301-00-8D	**PAF60-04000001**	311
69W-45501-00	**PAF60-04010000**	313
69W-45551-00	**PAF60-04000002**	311
69W-45560-00	**PAF60-04000600**	311
69W-45941-00-EL	**PAT40-04070000**	402
69W-81800-00	**PH130-0059**	110
69W-82575-00	**REC69W-82575-00**	120
6A0-14325-00	**REC6A0-14325-00**	99
6A0-24410-00	**REC692-24410-00**	85
6A0-24410-00	**REC6A0-24410-04**	85
6A0-24410-01	**REC6A0-24410-04**	85
6A0-24410-02	**REC6A0-24410-04**	85
6A0-24410-03	**REC692-24410-00**	85
6A0-24410-03	**REC6A0-24410-04**	85
6A0-24410-04	**REC692-24410-00**	85
6A0-24410-04	**REC6A0-24410-04**	85
6A0-24410-05	**REC692-24410-00**	85
6A0-82550-01	**REC6A0-82550-01**	120
6A0-W0001-21	**REC6A0-W0001-21**	146
6A1-14301-03	**REC6A1-14301-03**	92-93
6A1-14613-00	**REC6A1-14613-A0**	270
6A1-14613-01	**REC6A1-14613-A0**	270
6A1-14613-A0	**REC6A1-14613-A0**	220-270
6A1-44325-00P	**REC6A1-44325-00**	343
6A1-44361-00	**REC6A1-44361-00**	343
6A1-85540-00	**REC6A1-85540-01**	118
6A1-85540-01	**REC6A1-85540-01**	118
6A1-85570-00	**REC6A1-85570-00**	105
6A1-W0001-22	**REC6A1-W0001-22**	144
6A1-W0001-23	**REC6A1-W0001-23**	144-343
6A1-W0078-01	**REC6A1-W0078-01**	150-155-343
6A1-W0093-01	**REC6A1-W0093-01**	93-95
6AE-43880-00	**PH200-T057**	123
6AE-43880-01	**PH200-T057**	123
6AE-43880-03	**PH200-T057**	123
6AE-43880-04	**PH200-T057**	123
6AG-11181-00	**REC6AG-11181-00**	215
6AG-11181-10	**REC6AG-11181-00**	187-218
6AH-11111-10-1S	**PAF20-05030100**	187
6AH-11168-00	**PAF20-05040003**	187
6AH-11169-00	**PAF20-05040004**	187
6AH-11191-001S	**PAF20-05040000**	187
6AH-11351-10	**REC6AH-11351-00**	187-218
6AH-11356-00	**PAF20-05040002**	187
6AH-11372-00	**PAF20-05040005**	187
6AH-11411-00	**PAF20-05020004**	189-219
6AH-11416-00	**PAF20-05010003**	189
6AH-11536-00	**PAF20-05000027**	189
6AH-11537-00	**PAF20-05030012**	189
6AH-11557-00	**PAF20-05000028**	189
6AH-11603-00	**PAF20-05020100**	189-219
6AH-11631-00	**PAF20-05020001**	189-219
6AH-11650-10	**PAF20-05020200**	189
6AH-11654-00	**PAF25-05020204**	189
6AH-12111-00	**PAF20-05030001**	189
6AH-12121-10	**PAF20-05030002**	189
6AH-12151-00	**PAF20-05030301**	189
6AH-12170-00	**PAF20-05030200**	189
6AH-12279-00	**PAF20-05030008**	189
6AH-12411-00	**REC6AH-12411-00**	65-136-137-187
6AH-12413-00-1S	**PAF20-05000700**	187
6AH-12414-00	**PAF20-05000702**	65-138-187
6AH-12481-00	**PAF20-05000016**	187
6AH-13300-00	**PAF20-05030400**	189
6AH-13329-00	**REC6AH-13329-00**	271
6AH-13329-10	**PAF20-05030010**	189
6AH-15100-00	**PAF20-05010000**	187
6AH-15312-00	**REC6AH-15312-00**	271
6AH-24410-00	**PAF20-05050000**	85
6AH-41113-01-1S	**PAF20-05000600**	187
6AH-41114-00	**PAF20-05000602**	187
6AH-44150-00	**PAF20-04020000S**	292
6AH-44150-10	**PAF20-04020000L**	292
6AH-44311-00	**PAF20-04040001**	147-293
6AH-44361-01	**PAF20-02000101S**	293
6AH-44361-11	**PAF20-02000101L**	293
6AH-44365-00	**PAF20-02000007**	293
6AH-44368-00	**PAF20-02000005**	293
6AH-45251-00	**TEN01154**	169
6AH-45251-00	**TEN01154AL**	65-165
6AH-45300-00-4D	**PAF20-04000000S**	277
6AH-45300-00-8D	**PAF20-04000000S**	277-292
6AH-45300-10-4D	**PAF20-04000000L**	277
6AH-45300-10-8D	**PAF20-04000000L**	277-292
6AH-45510-00	**PAF20-04030000S**	293
6AH-45510-10	**PAF20-04030000L**	293
6AH-46241-00	**PAF20-05000003**	189-267
6AH-81800-00	**PAF20-05000900W**	111
6AH-81800-01	**PAF20-05000900W**	111
6AH-81960-00	**PAT85-05030300**	116
6AH-82560-00	**PAT40-05000100**	103

R.O. / OEM	REF	
6AH-85510-00	**PAF20-05000200**	121
6AH-85540-00	**PAF20-05000300**	118
6AH-85550-00	**PAF20-05000500**	109
6AH-85550-10	**PAF20-05000500W**	109
6AH-85580-00	**PAF20-05000100**	107
6AH-W0078-00	**REC6AH-W0078-00**	150-153-292
6AH-W0078-01	**REC6AH-W0078-00**	150-292
6AH-W0078-01	**REC6AH-W0078-00**	65-154
6AH-W009B-02-1S	**PAF20-05000000**	189
6AQ-1132N-00	**TEN01171**	73-167-169
6AU-12121-00	**PAF6-04050002**	179
6AV-45251-00	**TEN01138**	164
6AW-11181-00	**REC6AW-11181-00**	214-216-218
6AW-11182-00	**REC6AW-11182-00**	214-216-218
6AW-11325-00	**TEN01170**	214
6AW-11325-00	**TEN01170**	167
6AW-11325-00	**TEN01170**	73-169
6AW-1132L-00	**TEN01173**	73-167-169
6AW-1132M-00	**TEN01176**	167-169
6AW-1132P-00	**TEN01177**	73-168-169-214
6AW-1132R-00	**TEN01172**	73-167-169-214
6AW-1132T-00	**TEN01175**	73-167-169
6AW-1132U-00	**TEN01174**	73-167
6AW-11351-00	**REC6AW-11351-00**	214-218
6AW-12411-00	**REC6AW-12411-00**	73-137-214
6AW-13907-00	**REC6AW-13907-00**	86
6AW-14613-00	**REC6AW-14613-00**	272
6AW-14623-00	**REC6AW-14623-00**	272
6AW-14984-00	**REC6AW-14984-00**	73-88
6AW-15312-00	**REC6AW-15312-00**	272
6AW-15451-00	**REC6AW-15451-00**	214-272
6AW-41134-00	**REC6AW-41134-01**	270
6AW-4380R-00	**REC48630-96J03**	125
6AW-4380R-01	**REC48630-92J00**	125
6AW-43880-00	**REC6AW-43880-02**	123
6AW-43880-01	**REC6AW-43880-02**	123
6AW-43880-02	**REC6AW-43880-02**	123
6AW-44311-00	**REC6AW-44311-01**	148-341
6AW-44311-01	**REC6AW-44311-01**	148
6AW-44312-00	**REC6AW-44312-00**	335-341
6AW-44315-00	**REC6AW-44315-00**	341
6AW-44322-00	**REC6AW-44322-00**	335-341
6AW-44323-00	**REC6AW-44323-00**	341
6AW-44336-00	**REC6AW-44336-00**	341
6AW-44352-00	**CEF500389N**	143-155
6AW-44352-00	**REC6AW-44352-00**	143-341
6AW-44365-00	**REC6AW-44365-00**	335-341
6AW-45113-00	**REC6AW-45113-00**	272
6AW-45251	**TEN01112-1**	166-169
6AW-45251-00	**CM6AW-45251-00**	161-169
6AW-45251-00	**CM6AW-45251-00A**	72-161-169
6AW-45373-00	**CM6AW-45373-00**	161-169
6AW-45373-00	**CM6AW-45373-00A**	161-169 -341
6AW-45373-00	**TEN01155**	166-169
6AW-45373-00	**TEN01155AL**	166-169
6AW-45619-00	**CM6AW-45619-00**	161
6AW-45619-00	**CM6AW-45619-00A**	161-341
6AW-45619-00	**TEN01169**	165
6AW-8194A-00	**REC6AW-8194A-00**	115
6AW-81950-00	**REC6AW-81950-00**	115
6AW-W0078-00	**REC6AW-W0078-00**	73-153-155-341
6B4-11193-A0	**REC6B4-11193-A0**	140
6B4-11351-A1	**REC6B4-11351-A1**	252
6B4-14301-00	**REC6B4-14301-00**	91-93
6B4-26301-00	**REC6B4-26301-00**	130
6B4-45251-00	**TEN01116**	169-348
6B4-85520-00	**REC6B4-85520-00**	107
6B4-85540-01	**REC6B4-85540-01**	120
6B4-85570-00	**REC6B4-85570-01**	104
6B4-85570-01	**REC6B4-85570-01**	104
6B4-85580-00	**REC6B4-85580-00**	107
6BG-11181-00	**REC6BG-11181-00**	201-215-218
6BG-13761-00	**REC6BG-13761-00**	89-90
6BG-13915-00	**REC6BG-13915-00**	67-80
6BG-44341-00	**PAT40-04040001**	313
6BG-W0078-00	**REC6BG-W0078-00**	67-151-153-154-302
6BL-11181-00	**REC6BL-11181-00**	195-215-218
6BL-11325-00	**CM6BL-11325-00**	161
6BL-11325-00	**CM6BL-11325-00A**	161-195
6BL-11325-00	**TEN01161**	166
6BL-44391-00	**PAF15-05000009**	139
6BR-81800-00	**PH130-0073**	112
6BR-81800-01	**PH130-0073**	112
6BX-11181-00	**PAF6-04000002**	179-215
6BX-11351-00	**PAF6-04000001**	179
6BX-11356-00	**PAF6-04000005**	179
6BX-12111-00	**PAF6-04050001**	179
6BX-12154-00	**PAF6-04000003**	179
6BX-44322-00	**PAF6-03000002**	154-287
6BX-45113-00	**PAF6-00000001**	151-179-217

R.O. / OEM	REF	
6BX-E1111-00-1S	**PAF6-04050100**	179
6BX-E1168-00	**PAF6-04010004**	179
6BX-E1191-00-5B	**PAF6-04000004**	179
6BX-E2155-00	**PAF6-04050004**	179
6BX-E2170-00	**PAF6-04030000**	179
6BX-F4323-00	**PAF6-04000020**	179
6BX-G4150-00	**PAF4-03020000S**	287
6BX-G4150-10	**PAF4-03020000L**	287
6BX-G4315-01	**PAF4-03000018**	287
6BX-WG0078-00	**REC6EE-W0078-01**	150
6C5-11650-00	**PAF25-05020200**	195-203-207
6C5-11650-10	**PAF25-05020200**	201-205
6C5-11654-00	**PAF25-05020204**	195-201-203-205-207
6C5-12858-00	**PAF15-07010003**	187
6C5-13761-00	**REC6C5-13761-00**	89-90
6C5-13907-00	**REC866169T01**	86
6C5-13915-00	**REC6C5-13915-00**	68-69-70-81
6C5-14984-00	**REC6C5-14984-00**	68-69-86-88
6C5-24251-00	**REC6C5-24251-00**	67-68-69-70-80
6C5-24410-00	**REC6C5-24410-00**	85
6C5-43800-11	**PAF60-06000000**	124
6C5-43800-12	**PAF60-06000000**	124
6C5-43880-00	**PH200-T045**	123
6C5-43880-01	**PH200-T045**	123
6C5-44361-00	**PAF60-02000007**	313
6C5-46241-00	**REC6C5-46241-00**	195-201-203-205-267
6C5-81800-00	**PH130-0056**	111
6C5-82105-01	**PAT85-05000023**	112
6C5-85885-00	**REC6C5-85885-00**	90-102
6C9-81800-00	**PH130-0076**	112
6CB-11181-00	**REC6CB-11181-00**	216-218
6CB-13016-00	**REC6CB-13016-00**	70-71-72-73-88
6CB-14984-00	**REC6CB-14984-00**	70-71-72-73-88
6CB-24501-01	**REC6CB-24501-01**	70-72-73
6CB-45611-00	**REC6CB-45611-00**	335
6CE-12411-00	**REC6CE-12411-00**	73-137
6CE-44311-00	**REC6CE-44311-01**	148
6CE-44311-01	**REC6CE-44311-01**	148-335
6CE-44315-00	**REC6CE-44315-00**	335
6CE-44323-01	**REC6CE-44323-01**	335
6CE-44352-00	**CEF500401N**	143
6CE-44352-00	**REC6CE-44352-00**	143
6CE-44352-01	**REC6CE-44352-00**	155-335
6CE-W0078-00	**REC6CE-W0078-01**	153
6CE-W0078-01	**REC6CE-W0078-01**	73-153-334
6CJ-11181-00	**REC6CJ-11181-00**	205-215-218
6CJ-44323-00	**REC6CJ-44323-00**	317
6CJ-44324-00	**REC6CJ-44324-00**	317
6CJ-81800-00	**PH130-0056**	111
6CJ-W0078-00	**REC6CJ-W0078-00**	69-151-153-154-314
6D0-11181-00	**REC6D0-11181-00**	249-254
6D0-41134-00	**REC61A-41134-A0**	272
6D0-44362-01	**REC6D0-44362-01**	335-339
6D0-44367-00	**REC6D0-44367-00**	335-339
6D0-45332-00-CA	**REC6D0-45332-00-CA**	337
6D0-45361-00-8D	**REC6D0-45361-00-8D**	337
6D0-81800-00	**PH130-0076**	112
6D0-W0001-00	**REC6D0-W0001-00**	252-254
6D3-81960-00	**REC881346T**	117
6D8-11603-01	**REC6D8-11603-10**	209
6D8-11604-01	**REC6D8-11604-10**	209
6D8-12111-00	**REC6D8-12111-00**	209
6D8-12121-10	**REC6D8-12121-10**	209
6D8-13761-00	**REC6D8-13761-00**	89-90
6D8-24563-00	**REC6D8-WS24A-00**	80
6D8-41114-A0	**REC67F-41114-A2**	209
6D8-43880-00	**PH200-T068**	123
6D8-43880-00	**REC6D8-43880-09**	123
6D8-43880-01	**PH200-T068**	123
6D8-43880-09	**PH200-T068**	123
6D8-43880-09	**REC6D8-43880-09**	123
6D8-44341-01	**REC688-44341-01**	321
6D8-WS24A-00	**REC6D8-WS24A-00**	80
6D8-WS24A-00	**REC6D8-WS24A-00**	66-67-68-69-70-71-81
6D9-12411-00	**REC6D9-12411-00**	70-137
6D9-45551-00	**REC6D9-45551-00**	319
6DA-11181-00	**REC6DA-11181-00**	216-218
6DA-12411-01	**REC6DA-12411-01**	72-136-137
6DA-13761-00	**REC6DA-13761-00**	90
6E0-11193-A1	**REC6E0-11193-A1**	221
6E0-11631-00-98	**REC6E0-11631-00-98K**	221-262-266
6E0-11651-01	**REC6E0-11651-01**	221-225-260
6E0-24411-00	**REC6E0-24411-00**	87
6E0-24435-00	**REC6E0-24435-00**	87
6E0-24471-00	**REC6E0-24471-00**	87
6E0-26301-01	**REC6E0-26301-01**	130
6E0-41112-A1	**REC6E0-41112-A1**	140-21
6E0-41114-A1	**REC6E0-41114-A1**	140-221

R.O. / OEM	REF	
6E0-43118-00	**REC6E0-43118-01**	134
6E0-43118-01	**REC6E0-43118-01**	134
6E0-44311-00	**PAF4-03000019**	154-345
6E0-44315-A0	**PAF4-03000018**	345
6E0-44322-02	**PAF4-03000017**	285
6E0-44322-02	**REC6E0-44322-02**	154-155-345
6E0-44323-00	**PAF4-03000015**	154-155-285-345
6E0-44328-00	**PAF4-03000020**	345
6E0-44352-00	**CEF500325**	143
6E0-44352-00	**PAF4-03060000**	64-285
6E0-44352-00	**REC6E0-44352-00**	143-154-155-287-345
6E0-44366-00	**PAF4-03000021**	345
6E0-45113-A1	**REC6E0-45113-A1**	221-252
6E0-45251-11	**CM6E0-45251-11**	169
6E0-45251-11-00	**CM6E0-45251-11**	158
6E0-45251-11-00	**CM6E0-45251-11A**	65-66-67-68-69-158 -169
6E0-45251-11-00	**TEN01123**	164-169
6E0-45251-11-00	**TEN01123AL**	164-169
6E0-45315-A0	**PAF4-03000011**	345
6E0-45316-09	**PAF4-03000003**	285-287
6E0-45316-09	**REC6E0-45316-00**	345
6E0-45316-09	**REC90340-08002**	346
6E0-45317-09	**PAF4-03000002**	285-287
6E0-45317-09	**REC6E0-45317-00**	345
6E0-45321-01-5B	**PAF4-03000012**	345
6E0-45361-01-4D	**PAF4-03050001**	345-387
6E0-45511-01	**PAF4-03000004S**	285
6E0-45511-01	**REC6E0-45511-01**	345-387
6E0-45511-11	**PAF4-03000004L**	285
6E0-45511-11	**REC6E0-45511-11**	345-387
6E0-45551-00	**PAF4-03000007**	285
6E0-45551-00	**REC6E0-45551-00**	345-387
6E0-45560-00	**REC6E0-45560-00**	345-387
6E0-45570-00	**REC6E0-45570-00**	345-387
6E0-45611-01	**REC6E0-45611-01**	345
6E0-45631-00	**REC6E0-45631-00**	345-387
6E0-45943-01	**PAF4-03070000**	287
6E0-45943-01-EL	**PAF4-03070000**	285-402
6E0-45943-01-EL	**SOL3011-075-07S**	402
6E0-45949-00	**PAF2.6-03010000**	287
6E0-85540-70	**REC6E0-85540-71**	119
6E0-85540-71	**REC6E0-85540-71**	119
6E0-85570-00	**REC6E0-85570-00**	104
6E0-W0001-C1	**REC6E0-W0001-C1**	144-285-345
6E0-W0078-00	**PAGB/T820-M5X30**	345
6E0-W0078-00	**REC6E0-W0078-A2**	150-153
6E0-W0078-01	**PAGB/T820-M5X30**	345
6E0-W0078-01	**REC6E0-W0078-A2**	150-153
6E0-W0078-02	**PAGB/T820-M5X30**	345
6E0-W0078-02	**REC6E0-W0078-A2**	150-153
6E0-W0078-A2	**REC6E0-W0078-A2**	150-153-155-285-345
6E3-14301-05	**REC6E3-14301-05**	92-93
6E5-11181-A2	**REC6E5-11181-A0**	245-249-254
6E5-11193-A0	**REC6E5-11193-A0**	245-255
6E5-11325-00	**CM15026**	158-169
6E5-11325-00	**CM15026A**	65-70-72-73-158-169-187-209-213
6E5-11325-00	**PAF15-07010026**	183
6E5-11325-00	**TEN01152**	163-169-245-247
6E5-11381-A1	**REC6E5-11381-A1**	275
6E5-11381-A2	**REC6E5-11381-A1**	245-247
6E5-11411-00	**REC6E5-11411-00**	256
6E5-11447-00	**REC6E5-11447-00**	245-247
6E5-11610-02	**REC6E5-11610-02**	265-266-267
6E5-11633-01	**REC6E5-11633-00**	261-265
6E5-11634-00	**REC6E5-11634-00**	265
6E5-11650-01	**REC6E5-11650-01**	261
6E5-11651-00	**REC6E5-11651-00**	261
6E5-12411-00	**REC6E5-12411-02**	136
6E5-12411-01	**REC6E5-12411-02**	136-221-223-229-231-233
6E5-12411-02	**REC6E5-12411-02**	136-137
6E5-12411-10	**REC6E5-12411-30**	137
6E5-12411-20	**REC6E5-12411-30**	137
6E5-12411-30	**REC6E5-12411-30**	137-227-237-245-247
6E5-13411-00	**REC6E5-13411-00**	83
6E5-13621-A1	**REC6E5-13621-A1**	275
6E5-13645-A1	**REC6E5-13645-A1-00**	275
6E5-14198-A2	**REC6E5-14198-A2**	275
6E5-14323-03	**REC6E5-14323-03**	99
6E5-14328-01	**REC6E5-14328-01**	99
6E5-14385-02	**REC6E5-14385-02**	93-100
6E5-14386-01	**REC6E5-14386-01**	99
6E5-14386-02	**REC6E5-14386-02**	99
6E5-14416-A1	**REC6E5-14416-A1**	275
6E5-14483-A1	**REC6E5-14483-A1**	275
6E5-14546-00	**REC6E5-14546-00**	93-98
6E5-24305-05-00	**GS31076**	76
6E5-24305-06	**GS31076**	76

R.O. / OEM	REF	
6E5-24305-06-00	GS31076	76
6E5-24351-00	REC6E5-24351-51	75
6E5-24351-51	REC6E5-24351-51	75
6E5-24377-00	PAF15-07010006	181-183
6E5-24410-01-00	REC6E5-24410-03	85
6E5-24411-00-00	REC6E5-24411-00	87
6E5-24434-02	REC6E5-24434-02	88
6E5-24435-00	REC6E5-24435-00	88
6E5-24471-00	REC6E5-24471-00	87
6E5-41112-A1	REC6E5-41112-A1	142-245
6E5-41134-A0	REC6E5-41134-A0	269-270
6E5-43880-00	PH200-T037	123
6E5-43880-01	PH200-T037	123
6E5-43880-02	PH200-T037	123
6E5-44150-01	REC6E5-44150-02	377
6E5-44311-00	REC61A-44311-00	148
6E5-44311-00	REC6E5-44311-00	155-156-157-381
6E5-44312-00	REC6E5-44312-00	325-329-333-339-385-386
6E5-44315-A0	REC6E5-44315-A0	156-157-325-329-333-377-381-385
6E5-44322-00	REC6E5-44322-00	156-157-381
6E5-44323-00	REC6E5-44323-00-40	149-155-156-157-377
6E5-44352-01	CEF500371	143
6E5-44352-01	REC6E5-44352-01	143-155-156-157-325-329-333-339-377-381-385-386
6E5-44365-00	REC6E5-44365-00	155-157-325-329-333-339-377-381-385-386
6E5-44366-00	REC6E5-44366-00	155-156-157-325-333-339-377-381
6E5-45113-A0	REC6E5-45113-A2	253-254
6E5-45114-A0	REC6E5-45114-00	272
6E5-45251-00	CM6E5-45251-00	158-169
6E5-45251-00	TEN01105	164-169
6E5-45251-00	TEN01129	165
6E5-45300-16-8D	REC405-A20	375
6E5-45300-17-8D	REC405-A20	280
6E5-45300-26-8D	REC405-A25	375
6E5-45300-27-8D	REC405-A25	280
6E5-45321-00	REC6E5-45321-00	325-329-377-381
6E5-45331-00-94	REC6E5-45331-00-94	377-381
6E5-45331-00-9S	REC6E5-45331-00-94	325-329
6E5-45331-00-9S	REC6E5-45331-00-94	391
6E5-45332-00-94	REC6E5-45332-00-94	375
6E5-45332-00-CA	REC6E5-45332-00-94	323
6E5-45344-00	REC6E5-45344-00	325-329-333-339-377-381-385
6E5-45371-00	CM6E5-45371-01A	323
6E5-45371-00	TEN01153	164
6E5-45371-01	CM6E5-45371-01A	161-379
6E5-45371-01	REC6E5-45371-01	161-169-375
6E5-45371-10	CM6E5-45371-10	160
6E5-45371-10	TEN01153	370-375
6E5-45501-01	REC6E5-45501-01	377-391
6E5-45536-00	REC6E5-45536-00	325-377
6E5-45536-01	REC6E5-45536-00	329
6E5-45551-02	REC6E5-45551-00	375-391
6E5-45560-01	REC6E5-45560-00	375-391
6E5-45567-01	REC6E5-45567-01	323
6E5-45567-01-60	REC6E5-45567-01	375
6E5-45571-01	REC6E5-45570-00	375-391
6E5-45576-00	REC6E5-45576-00	323-375
6E5-45587-01	REC6E5-45587-01	325-329-377
6E5-45611-00	REC6E5-45611-00	323
6E5-45611-01	REC6E5-45611-00	375-391-392
6E5-45631-01	REC6E5-45631-00	375-391-392
6E5-45633-01	REC6E5-45633-01	323-327-335-375-379-391-392
6E5-45634-01	REC6E5-45634-01	323-327-375
6E5-45634-02	REC6E5-45634-01	327
6E5-45641-02	REC6E5-45641-03	375
6E5-45641-03	REC6E5-45641-03	327-379
6E5-45941-00-EL	SOL3411-130-19	402
6E5-45941-00-EL	SOL3413-125-19	402
6E5-45943-00-EL	SOL3411-130-21	402
6E5-45943-00-EL	SOL3413-125-21	402
6E5-45945-00-EL	SOL3411-133-17	402
6E5-45945-00-EL	SOL3413-128-17	402
6E5-45947-00-EL	SOL3411-135-15	402
6E5-45947-00-EL	SOL3413-130-15	402
6E5-45949-00-EL	SOL3411-138-13	402
6E5-45949-00-EL	SOL3413-133-13	402
6E5-45954-00-EL	SOL3411-140-11	402
6E5-45978-01	REC6E5-45987-00	379
6E5-45987-01	REC6E5-45987-00	375-405
6E5-61301-00	GS41084	131
6E5-61301-01	GS41084	131

R.O. / OEM	REF	
6E5-81800-10	PH130-0005	110
6E5-81800-11	PH130-0005	110
6E5-81800-12	PH130-0005	110
6E5-81900-01	REC6E5-81900-01	84
6E5-81941-11	REC61A-81941-00	114
6E5-81950-01	PH375-0047	110-115
6E5-81950-01	REC89-825096T01	114
6E5-8195A-01	PH375-0048	115
6E5-8195C-01	PH375-0048	115
6E5-82570-05	REC704-82570-12	128
6E5-85510-10	REC6E5-85510-11	121
6E5-85510-11	REC6E5-85510-11	121
6E5-85540-10	REC6E5-85540-12	119
6E5-85540-11	REC6E5-85540-12	119
6E5-85540-12	REC6E5-85540-12	119
6E5-85570-10	REC6E5-85570-11	105
6E5-85570-11	REC6E5-85570-11	105
6E5-W0001-A2	REC6E5-W0001-A2	251
6E5-W0001-A2	REC6E5-W0001-A2	254
6E5-W0001-F1	REC6E5-W0001-F1	147-374-378
6E5-W0078-02	REC6N6-W0078-02	374
6E5-W0093-06	REC6E5-W0093-06	97-245
6E5-W0093-07	REC6E5-W0093-07	97
6E5-W0093-08	REC6E5-W0093-08	97
6E7-11111-01-1S	REC6E7-11111-01-1S	227
6E7-11181-A2	REC6E7-11181-00	248-254
6E7-11631-00	REC6E7-11631-00K	262
6E7-11631-00-97	REC6E7-11631-00K	227-266
6E7-11635-00	REC6E7-11635-00K	227-262
6E7-11636-00	REC6E7-11636-00K	227-262
6E7-14227-00	REC6E7-14227-00	94
6E7-14385-00	REC6E7-14385-00	93-100
6E7-44366-00	REC6E7-44366-00	349
6E7-45331-00-9M	REC6E7-45331-00-CA	349
6E7-45501-00	REC6E7-45501-00	349
6E7-45501-10	REC6E7-45501-11	349-387-388
6E7-45536-00	REC6E7-45536-00	349
6E7-45551-00	REC6E7-45551-00	348-387-388
6E7-45560-00	REC6E7-45560-01	349
6E7-45560-01	REC6E7-45560-01	291-293-351-387-388
6E7-45570-00	REC6E7-45570-00	293
6E7-45571-00	REC6E7-45570-00	291-349-351-387-388
6E7-45587-01-30	PAF15-06000009	348
6E7-45987-00	REC6E7-45987-00	291-349
6E7-45987-01	PAF15-06000015	351
6E7-45987-01	REC6E7-45987-00	293-351-405
6E7-85570-19-00	REC6E7-85570-19	106
6E7-W0001-00	REC6E7-W0001-A1	249
6E7-W0001-A1	REC6E7-W0001-A1	249-254
6E7-W0093-04	REC6E7-W0093-01	95
6E8-14390-12	REC6E8-14390-12	98
6E8-45251-00	CM6E8-45251-00	159
6E8-45251-00	TEN01106	164
6E8-45251-02	CM6E8-45251-01	159-169
6E8-45251-02	TEN01116	164
6E8-45587-10	PAF15-06000008	293
6E8-45587-10-13	PAF15-06000008	291-351
6E8-45587-30	PAF15-06000009	293
6E9-11193-A0	REC6E9-11193-A0	255
6E9-12413-00-1S	REC6E9-12413-00-1S	139-235
6E9-12414-A1	REC6E9-12414-A1	138-139-235
6E9-14198-A0	REC6E9-14198-A0	275
6E9-24378-00	PAF4-04010102	187
6E9-41114-A0	REC6E9-41114-A0	142
6E9-81970-70	REC6G1-81970-62	116
6E9-82575-00	REC6E9-82575-02	120
6E9-W0093-02	REC6E9-W0093-02	96
6E9-W0093-03	REC6E9-W0093-03	96
6EE-E5362-00	PAF4-04000036	177
6EE-E5396-00-CA	PAF4-04060000	177
6EE-F4251-00	REC68T-24251-00	80
6EE-G2177-00	PAF4-01090300	134
6EE-G4315-00	PAF4-03000018	64-154
6EE-G4366-00	PAF4-03000021	154-155
6EE-G5987-00	PAF4-03000025	405
6EE-W0078-00	REC6EE-W0078-01	150
6EE-W0078-01	REC6EE-W0078-01	150
6EG-G2138-00	PAF4-01090100	131
6EK-13761-00	REC6EK-13761-00	90
6EK-4380R-00	REC48630-92J00	125
6EK-44323-00	REC68V-44323-00	149-155-269-325
6F3-W0001-21	REC6E5-W0001-F1	147
6F3-W0001-A4	REC6F3-W0001-04-00	251
6F5-11181-A1	REC6F5-11181-A2	235
6F5-11181-A2	REC6F5-11181-A2	248-254
6F5-11193-A0	REC6G5-11193-A0	247
6F5-11515-00	REC6F5-11515-00	233-235
6F5-11610-00	REC6F5-11610-00	263
6F5-11610-10	REC6F5-11610-10	263
6F5-11610-20	REC6F5-11610-20	263
6F5-11633-00	REC6F5-11633-00	233-235-260-261-263

R.O. / OEM	REF	
6F5-11650-11	REC6R5-11650-10	247
6F5-11651-00	REC6F5-11651-00	233-235-260-261
6F5-11681-00	REC6F5-11681-00	235-261
6F5-12411-00	REC6F5-12411-03	137
6F5-12411-01	REC6F5-12411-03	137
6F5-12411-02	REC6F5-12411-03	137-235-239
6F5-12411-03	REC6F5-12411-03	137
6F5-13621-A1	REC6F5-13621-A1	275
6F5-13645-A1	REC6F5-13645-A0	274
6F5-13646-A1	REC6F5-13646-A2	274
6F5-14198-A1	REC6F5-14198-A1	275
6F5-14323-01	REC6F5-14323-00	98
6F5-14384-00	REC6F5-14384-00	94
6F5-14390-21	REC6F5-14390-21	98
6F5-14398-00	REC6F5-14398-00	94
6F5-14483-00	REC6F5-14483-00	94
6F5-15396-01-5B	REC6F5-15396-01-5B	235
6F5-15713-00	REC66T-15713-00	112
6F5-15713-01	REC66T-15713-00	112
6F5-24563-00	REC6F5-24563-00	80-81-82
6F5-26311-00	REC6F5-26311-00	130
6F5-41111-01-1S	REC6F5-41111-01-1S	235
6F5-41112-A0	REC6F5-41112-A0	141-235
6F5-41113-01-1S	REC6F5-41113-A0-1S	235
6F5-41114-A0	REC6F5-41114-A0	142-235
6F5-44352-00	CEF500352	143
6F5-44352-00	REC6F5-44352-00	143-363
6F5-44352-02	REC6F5-44352-00	156-367
6F5-45113-A0	REC6F5-45113-A0	235-253-254
6F5-45312-01-4D	REC6F5-45312-00-4D	363
6F5-45551-00	REC6F5-45551-00	363-389-390
6F5-45560-00	REC6F5-45560-00	363-389-390
6F5-45570-00	REC6F5-45570-00	363-389-390
6F5-81800-10	PH130-0062	110
6F5-81800-11	PH130-0062	110
6F5-85540-22	REC6F5-85540-22	119
6F5-W0001-C0	REC6F5-W0001-C0	145-363
6F5-W0078-00	REC6F5-W0078-A0	151
6F5-W0078-A0	REC6F5-W0078-A0	156-363
6F6-11111-00-1S	REC6F6-11111-00-1S	235
6F6-11191-00-1S	REC6F6-11191-00-1S	235
6F6-11193-A1	REC6F6-11193-A1	235-255
6F6-11400-01	REC6F6-11400-02	235
6F6-11610-00	REC6F5-11610-00	235
6F6-11610-010	REC6F5-11610-10	235
6F6-11610-20	REC6F5-11610-20	235
6F6-11631-00-95	REC6F6-11631-00K	235-263
6F6-11635-00	REC6F6-11635-00K	235-263
6F6-11636-00	REC6F6-11636-00K	235-263
6F6-13610-00	REC6F6-13610-00	99
6F6-14301-06	REC6F6-14301-06	91
6F6-14341-00	REC6F6-14341-00	98
6F6-14385-00	REC6F6-14385-00	100
6F6-45611-00	REC6F6-45611-00	363-389-390
6F6-85530-01	REC6F6-85530-01	106
6F6-85540-01	REC6F6-85540-01	118
6F6-W0001-02	REC6F6-W0001-02	234-251
6F6-W0093-00	REC6F6-W0093-00	96-234
6F8-11181-A1	REC6F8-11181-A0	220-248-254
6FM-12411-00	REC6FM-12411-00	66-136-137
6FM-13761-00	REC6FM-13761-00	90
6FP-12411-00	REC6FP-12411-00	70-137
6G0-11181-00	REC6G0-11681-00	261
6G0-82519-00	PAF6-04000009	179
6G0-85540-11	REC6G0-85540-11	119
6G1-11193-A1	REC6G1-11193-A1	140-223
6G1-11610-00	REC6G1-11610-00	221-262-266
6G1-11633-00	REC6G1-11633-00	221-225-260-262
6G1-11681-00	REC6G1-11681-00	221-223-225-260
6G1-13621-A1	REC6G1-13621-A1	273
6G1-13645-A1	REC6G1-13645-A1	273
6G1-14198-A1	REC6G1-14198-A1	273
6G1-14301-01	REC6G1-14301-01	91-93
6G1-14546-01	REC6G1-14546-00	93-98
6G1-15755-00	PAF4-04130100	113
6G1-15779-00	PAF4-04130100	113
6G1-24304-02	REC6G1-24304-02	77
6G1-24305-00	GS31075	76
6G1-24305-01	GS31075	76
6G1-24305-02	GS31075	76
6G1-24305-02-00	GS31075	76
6G1-24305-03	GS31075	76
6G1-24305-03-00	GS31075	76
6G1-24305-04	GS31075	76
6G1-24305-04-00	GS31075	76
6G1-24305-05	GS31075	76
6G1-24305-05-00	GS31075	76
6G1-24305-0500	GS31075	76
6G1-24306-55	PAF15-09000000	74
6G1-24411-00	REC6G1-24411-00	87
6G1-24431-01	REC6E0-24434-00	87
6G1-24431-01	REC6G1-24431-01	87

R.O. / OEM	REF	
6G1-24471-00	REC6G1-24471-00	87
6G1-41112-A1	REC6G1-41112-A1	140-223
6G1-41114-A0	REC6G1-41114-A0	140-223
6G1-41133-A0	REC6G1-41133-A0	268
6G1-42138-00	PAF4-01090100	131
6G1-42138-01	PAF4-01090100	131
6G1-44315-A0	REC6G1-44315-A0	155-346
6G1-44322-00	REC6G1-44322-00	155-346
6G1-44323-00	REC6G1-44323-00	155-346
6G1-44328-00	REC6G1-44328-00	346
6G1-44352-00	CEF500302	143
6G1-44352-00	REC6G1-44352-00	143-155-346
6G1-45113-A1	REC6G1-45113-A1	223-252
6G1-45214-00	PAF15-06000003	289-293-350
6G1-45215-00	PAF15-06000002	289
6G1-45251-02	CM6G1-45251-02	159-169
6G1-45251-02	TEN01108	165-169
6G1-45251-03	CM6G1-45251-03	159-169
6G1-45251-03	TEN01118	164-169
6G1-45315-A0	REC6G1-45315-A0	346
6G1-45316-09	REC6G1-45316-09	289
6G1-45317-09	REC6G1-45317-09	289
6G1-45362-09	REC6G1-45362-09	289
6G1-45611-01	REC6G1-45611-01	346-387
6G1-45631-00	REC6G1-45631-00	346-387
6G1-45941-00-EL	SOL3011-085-09	402
6G1-45943-00-EL	SOL3011-085-08	402
6G1-45947-00-EL	SOL3011-085-07	402
6G1-81940-00	REC89-825096T01	114
6G1-81941-10	PAF15-05170300W	111-114
6G1-81941-10	REC89-825096T01	110
6G1-81970-00	REC6G1-81970-62	116
6G1-81970-60	REC6G1-81970-62	116
6G1-81970-61	REC6G1-81970-62	116
6G1-81970-62	REC6G1-81970-62	116
6G1-81970-A0	REC6G1-81970-62	116
6G1-W0001-C0	REC6G1-W0001-C1	144
6G1-W0078-00	REC6G1-W0078-A1	150
6G1-W0078-01	REC6G1-W0078-A1	150
6G1-W0078-A1	REC6G1-W0078-A1	150-346
6G1-W0078-A1	REC6G1-W0078-A1	155
6G1-W0093-00	REC6G1-W0093-00	93-95-223
6G5-11181-A3	REC6G5-11181-A2	247-249-254
6G5-11193-A1	REC6G5-11193-A0	255
6G5-11382-A1	REC6G5-11382-A1	142-245-247
6G5-11411-02	REC6G5-11411-02	247-256
6G5-11631-00-93	REC6G5-11631-00K	265-266-267
6G5-11642-00-93	REC6G5-11642-00K	265-266-267
6G5-12416-00	REC60H-12416-00	209-211
6G5-13645-A2	REC6G5-13645-A1	276
6G5-14416-A1	REC6G5-14416-A1	275
6G5-14483-A1	REC6G5-14483-01	276
6G5-41112-A1	REC6G5-41112-A1	142-247
6G5-41114-A0	REC6G5-41114-A0	142-247
6G5-41134-A1	REC6G5-41134-A1	270
6G5-41217-01	REC6G5-41217-00	101
6G5-43864-00	REC6G5-43864-00	125
6G5-43880-00	PH200-T030	123
6G5-43880-01	PH200-T030	123
6G5-43880-02	PH200-T030	123
6G5-44150-02	REC6G5-44150-02	381
6G5-44323-00	REC6G5-44323-00	329-333-381-385
6G5-44323-00	REC6G5-44323-00	155-157
6G5-44323-01	REC6G5-44323-00	149
6G5-45113-A1	REC6G5-45113-A1	245-247
6G5-45113-A2	REC6G5-45113-A1	253-254
6G5-45114-A1	REC6G5-45114-A0	272
6G5-45251-01	CM6G5-45251-01	158-169
6G5-45251-01	CM6G5-45251-01A	70-158-169
6G5-45251-01	TEN01112	166-169
6G5-45251-01	TEN01112AL	166-169
6G5-45251-02	TEN01112	166-169
6G5-45251-02	TEN01112AL	166-169
6G5-45383-01	REC6G5-45383-01	327-379
6G5-45384-00	REC6G5-45384-00	327-379
6G5-45501-21	REC6G5-45501-21	381-391-392
6G5-45536-01	REC6G5-45536-01	381
6G5-45551-01	REC6G5-45551-00	379-391-392
6G5-45560-01	REC6G5-45560-00	379-391-392
6G5-45571-02	REC6G5-45571-00	379-391-392
6G5-45576-10	REC6G5-45576-10	327
6G5-45631-00	REC6G5-45631-00	379-391-392
6G5-45941-00-98	SOL3511-150-15	403
6G5-45941-00-98	SOL3513-148-15	403
6G5-45941-00-98	SOL3571-158-15	403
6G5-45945-01-98	SOL3511-145-19	403
6G5-45945-01-98	SOL3513-143-19	403
6G5-45945-01-98	SOL3571-153-19	403
6G5-45947-01-98	SOL3511-148-17	403
6G5-45947-01-98	SOL3513-145-17	403
6G5-45947-01-98	SOL3571-155-17	403
6G5-45949-00-98	SOL3511-142-23	403
6G5-45949-00-98	SOL3511-143-21	403

R.O. / OEM	REF	
6G5-45949-00-98	SOL3512-142-23	403
6G5-45949-00-98	SOL3513-140-21	403
6G5-45949-00-98	SOL3571-148-23	403
6G5-45949-00-98	SOL3571-150-21	403
6G5-45952-00-98	SOL3512-150-15	403
6G5-45952-00-98	SOL3514-148-15	403
6G5-45952-00-98	SOL3572-158-15	403
6G5-45970-02-98	SOL3531-145-15	403
6G5-45972-02-98	SOL3531-140-21	403
6G5-45974-03-98	SOL3531-140-19	403
6G5-45976-01-98	SOL3531-140-23	403
6G5-45978-03-98	SOL3531-143-17	403
6G5-81960-A0	REC6G5-81960-A0	116
6G5-85510-10	REC6G5-85510-11	121
6G5-85540-10	REC6G5-85540-12	119
6G5-85540-11	REC6G5-85540-12	119
6G5-85540-12	REC6G5-85540-12	119
6G5-W0001-03	REC6G5-W0001-A3	252
6G5-W0001-03	REC6G5-W0001-A3	254
6G5-W0001-A3-00	REC6G5-W0001-A3	247
6G5-W0078-00	REC6G5-W0078-A1	152
6G5-W0078-01	REC6G5-W0078-A1	152
6G5-W0078-A1	REC6G5-W0078-A1	152-157-378
6G8-11181-00	REC6G8-11181-A1	181
6G8-11181-A1	REC6G8-11181-A1	215-218
6G8-11197-01	PAF20-05030009	203-205
6G8-11197-A0	PAF20-05030009	187
6G8-11325-00	CM6G8-11325-00	159-169-181
6G8-11325-00	CM6G8-11325-00A	65-159-180-187-195-201-203-205
6G8-11325-00	TEN01148	163-169
6G8-11351-00	REC6G8-11351-A0	181
6G8-11351-A0	REC6G8-11351-A0	217
6G8-11351-A0	REC6G8-11351-A0	218
6G8-12411-00	REC6AH-12411-00	181
6G8-12411-02	PAF15-07000031	191
6G8-12411-03	PAF15-07000031	195-197-201-203-205-207
6G8-12411-03	PAF15-07000031	66-67-68-69-137
6G8-12414-00	REC6G8-12414-A0	181
6G8-12414-A0	REC6G8-12414-A0	138
6G8-13440-00	REC6G8-13440-00	83
6G8-13645-00	REC6G8-13645-00	273
6G8-13646-00	REC6G8-13646-A0	273
6G8-14198-00	REC6G8-14198-A0	273
6G8-15363-00	PAF15-07050004	181-185-187-191-195-197-201-203-205-207-209-211-213-214
6G8-15374-00	REC6G8-15374-00	273
6G8-41112-02	REC6G8-41112-02	140-181
6G8-41114-00	REC6G8-41114-00	140
6G8-44532-00	PAF2.6-04000009	171
6G8-45113-A1	REC6G8-45113-A1	271
6G8-45251-00	CM6G8-45251-01	159-169
6G8-45251-00	TEN01137	164-169
6G8-46241-00	REC6G8-46241-00	267
6G8-818000-10	PH130-0062	110
6G8-818000-11	PH130-0062	110
6G8-81870-00	REC6G8-81870-00	120
6G8-81960-A1	REC6G8-81960-A1	117
6G8-W0001-A3	REC6G8-W0001-A3	181-216-218
6G9-85540-20	REC6G9-85540-29	117-118
6G9-85540-21	REC6G9-85540-29	117-118
6G9-85540-22	REC6G9-85540-29	117-118
6G9-85540-29	REC6G9-85540-29	117-118
6G9-W0001-C4	REC6G9-W0001-C4	144
6G9-W0001-C6	REC6G9-W0001-C6	144
6GH-45251-00	CM6G1-45251-03	159
6H0-81960-00	REC6H0-81960-00	116
6H0-82105-02	PAT85-05000023	112
6H0-82105-J2	PAT85-05000023	112
6H0-W0093-00	REC6H0-W0093-00	97
6H1-11372-00	PAF15-04000005	187
6H1-11631-03-95	REC6H1-11631-03K	264-266
6H1-14485-00	PAT15-04010202	171
6H1-15359-01-94	REC6H1-15359-01-94	243
6H1-43800-13-4D	REC6H1-43800-17-8D	124
6H1-43800-14-4D	REC6H1-43800-17-8D	124
6H1-43800-15-4D	REC6H1-43800-17-8D	124
6H1-43800-16-4D	REC6H1-43800-17-8D	124
6H1-43800-17-8D	REC6H1-43800-17-8D	124
6H1-43880-00	PH200-T041	122
6H1-43880-02	PH200-T029	122
6H1-44144-00	REC6H1-44144-00	373
6H1-45214-00	REC6H1-45214-00	315-319
6H1-45215-00	REC6H1-45215-00	315-319
6H1-45251-01	CM6H1-45251-01	158-169
6H1-45251-01	CM6H1-45251-01A	158
6H1-45251-01	TEN01125	167
6H1-45251-02	TEN01115	166-169
6H1-45251-02	TEN01115AL	166-169
6H1-45251-03	TEN01113	166-169

R.O. / OEM	REF	
6H1-45611-01-00	REC6H1-45611-00	373-390-391
6H1-45631-01-00	REC6H1-45631-01	373-390-391
6H1-45634-02	REC6H1-45634-02	373
6H1-45668-00	REC6H1-45668-00	315-319-331-335-337-341-373-383
6H1-81950-00	REC6H1-81950-01	115
6H1-81950-01	REC6H1-81950-01	115
6H1-85510-00	REC6H1-85510-00	121
6H1-W0001-A1	REC6H1-W0001-00-00	251
6H1-W0093-01	REC6H1-W0093-01-00	97
6H1-W0093-01-00	REC6H1-W0093-01-00	243
6H1-W0093-10	REC6H1-W0093-10	97
6H14525102	CM6H1-45251-02	158-169
6H14525102	CM6H1-45251-02A	69-70-71-158-169
6H2-81960-10	REC6H2-81960-10	116
6H2-85540-10	REC6H2-85540-13	118
6H2-85540-11	REC6H2-85540-13	118
6H2-85540-12	REC6H2-85540-13	118
6H2-85540-13	REC6H2-85540-13	118
6H2-W0001-20	REC6H2-W0001-20	146
6H2-W0093-10	REC6H2-W0093-10	96-241
6H3-11181-A2	REC6H3-11181-A0	241-248-254
6H3-11193-A1	REC6H3-11193-A1	241-255
6H3-11325-01	CM6H3-11325-01A	241
6H3-11631-01-96	REC6H3-11631-01K	241-262-266
6H3-11633-00	REC6H3-11633-00	241-261-262-264
6H3-11635-01	REC6H3-11635-01K	241-262
6H3-11636-01	REC6H3-11636-01K	241-262
6H3-12411-00	REC6H3-12411-10	137
6H3-12411-01	REC6H3-12411-10	137
6H3-12411-10	REC6H3-12411-10	137-241
6H3-12411-11	REC6H3-12411-10	137
6H3-12413-00-1S	PAF15-07010021	197-207-241
6H3-12413-00-9M	PAF15-07010021	191
6H3-12413-001S	PAF15-07010021	183
6H3-12414-A1	REC6H3-12414-A1	138-241
6H3-13621-A1	REC6H3-13621-A1	274
6H3-13622-A1	REC6H3-13622-A1	274
6H3-14198-A1	REC6H3-14198-A1	274
6H3-14457-01	REC6H3-14457-01	94
6H3-14590-01	REC6H3-14590-00	93-98
6H3-41112-A0	REC6H3-41112-A0	141-241
6H3-41114-A0	REC6H3-41114-A0	141-241
6H3-41217-00	REC6H3-41217-00	101
6H3-44311-00	REC6H3-44311-00	148
6H3-44315-00	REC6H3-44315-00	154-156
6H3-44323-00-00	REC6H3-44323-00	149-154-156
6H3-44352-00	CEF500316	143
6H3-44352-00	REC6H3-44352-00	143-154-156-313-317
6H3-44391-00	PAF15-05000009	139
6H3-44391-01	PAF15-05000009	139
6H3-45113-00	REC6H3-45113-00	241
6H3-45113-A0	REC6H3-45113-00	253-254
6H3-45114-A1	REC6H3-45114-A1	271
6H3-45123-00	REC6H3-45123-00	269
6H3-45127-00	REC6H3-45127-00	269
6H3-81800-10	PH130-0050	111
6H3-81800-11	PH130-0050	111
6H3-82510-00	REC6H3-82510-03	114
6H3-82510-01	REC6H3-82510-03	114
6H3-82510-02	REC6H3-82510-03	114
6H3-82510-03	REC6H3-82510-03	114
6H3-85470-10	REC6H3-85570-10	104
6H3-85520-00	REC6H3-85520-00	107
6H3-85540-10	REC6H3-85540-11	118
6H3-85540-10	REC6H3-85540-13	118
6H3-85540-11	REC6H3-85540-11	118
6H3-85540-11	REC6H3-85540-13	118
6H3-85540-12	REC6H3-85540-11	118
6H3-85540-12	REC6H3-85540-13	118
6H3-85540-13	REC6H3-85540-13	118
6H3-W0001-02	REC6H3-W0001-02	241-250-254
6H3-W0001-22	REC6H3-W0001-22	145
6H3-W0078-00	REC6H3-W0078-02	68-69-152-154-156
6H3-W0093-02	REC6H3-W0093-02	93-97
6H4-11181-A2	REC6H4-11181-00	248-254
6H4-11193-00	REC6H4-11193-A1	255
6H4-11610-00	REC6H4-11610-00-00	264-266
6H4-11631-00-96	REC6H4-11631-00K	264-266
6H4-11631-01-95	REC6H4-11631-01K	237-263-266
6H4-11634-01	REC6H4-11634-01	237-263-264
6H4-11635-00	REC6H4-11635-00K	264
6H4-11635-01	REC6H4-11635-01K	237-263
6H4-11636-00	REC6H4-11636-00K	264
6H4-11636-01	REC6H4-11636-01K	237-263
6H4-11641-00	REC6H4-11641-00	237-261
6H4-14198-00	REC6H4-14198-09	274
6H4-14198-01	REC6H4-14198-01	274
6H4-14548-00	PAF25-05070019	99
6H4-14984-00	REC6H4-14984-00	94
6H4-14985-00	REC6H4-14985-01	100

R.O. / OEM	REF	
6H4-14985-01	**REC6H4-14985-01**	100
6H4-15369-A1	**REC6H4-15369-A1**	237
6H4-41112-A0	**REC6H4-41112-A0**	141-237
6H4-41114-A0	**REC6H4-41114-A0**	141-237
6H4-41134-A0	**REC6H4-41134-A0**	269
6H4-44352-00	**REC6H4-44352-02**	309
6H4-44352-02	**CEF500385G**	143
6H4-44352-02	**REC6H4-44352-02**	143-297-301-305-355-357-359-361
6H4-44352-02	**REC6H4-44352-02**	154-155-156
6H4-45113-00	**REC6H4-45113-00**	237
6H4-45113-A0	**REC6H4-45113-00**	253-254
6H4-45536-00	**PAT40-04000002**	301-305-309-313
6H4-45551-00	**REC6H4-45551-00**	359-389-390
6H4-45560-00	**REC6H4-45560-00**	359-389-390
6H4-45571-00	**REC6H4-45570-00**	359-389-390
6H4-45631-00	**REC6H4-45631-00**	389-390
6H4-81800-10	**PH130-0063**	110
6H4-81800-11	**PH130-0063**	110
6H4-81800-12	**PH130-0063**	110
6H4-W0001-01	**REC6H4-W0001-A1**	250-254
6H4-W0001-04	**REC6H4-W0001-04**	237-250
6H4-W0001-21	**REC6H4-W0001-21**	359
6H4-W0078-00	**REC6H4-W0078-00**	151
6H4-W0078-A0	**REC6H4-W0078-00**	155-156-359
6H4-W0093-01	**REC6H4-W0093-01-00**	96
6H4-W0093-03	**REC6H4-W0093-03**	96-237
6H5-43880-00	**PH200-T048**	122
6H5-43880-01	**PH200-T048**	122
6H5-43880-02	**PH200-T048**	122
6H5-43880-09	**PH200-T048**	122
6H9-45551-00	**REC6H9-45551-00**	365-389
6J1-11610-00	**REC6J1-11610-00**	221
6J4-81800-00	**PH130-0062**	110
6J4-81800-01	**PH130-0062**	110
6J8-11181-A1	**REC6J8-11181-A2**	231
6J8-11181-A2	**REC6J8-11181-A2**	248-254
6J8-11325-00	**TEN01150**	163-229-231
6J8-11631-02-97	**REC6J8-11631-02**	231-263-266
6J8-12414-A0	**REC61A-12414-A0**	237
6J8-13411-00	**REC6J8-13411-00**	83
6J8-24471-00	**REC6J8-24471-00**	87
6J8-44311-00	**REC663-44311-02**	357
6J8-45113-A0	**REC6J8-45113-00**	231-253-254
6J8-81960-00	**PAF15-07060001**	117
6J8-85540-H2	**REC6J8-85540-H2**	120
6J8-W0001-21	**REC6J8-W0001-21**	145-357
6J8-W0078-A1	**REC6J8-W0078-A2**	150-151
6J8-W0078-A2	**REC6J8-W0078-A2**	155-357
6J9-45332-00-CA	**REC6J9-45332-00-CA**	327-379-391-392
6J9-45371-00	**TEN01143**	165
6J9-45371-01	**CM6J9-45371-01**	160-169
6J9-45371-01	**CM6J9-45371-01A**	72-160-169-327
6J9-45371-01	**TEN01133**	165-169
6J9-45371-01	**TEN01133AL**	165-169
6J9-45371-02	**CM6K1-45371-02**	160-169
6J9-45371-02	**CM6K1-45371-02A**	72-160-169
6J9-45611-01	**REC6J9-45611-00**	327-379-391-392
6K1-45371-00	**CM6K1-45371-00**	161-169
6K1-45371-00	**CM6K1-45371-00A**	161-169
6K1-45371-00	**TEN01144**	168-169
6K1-45371-00	**TEN01144AL**	168-169
6K1-45371-02	**TEN01134**	165-169
6K1-45945-01-98	**SOL3512-145-19**	403
6K1-45945-01-98	**SOL3514-143-19**	403
6K1-45945-01-98	**SOL3572-153-19**	403
6K1-45947-00-98	**SOL3512-148-17**	403
6K1-45947-00-98	**SOL3514-145-17**	403
6K1-45947-00-98	**SOL3572-155-17**	403
6K1-45970-01-98	**SOL3532-145-15**	403
6K1-45972-01-98	**SOL3532-140-21**	403
6K1-45974-02-98	**SOL3532-140-19**	403
6K1-45976-00-98	**SOL3532-140-23**	403
6K1-45978-02-98	**SOL3532-143-17**	403
6K1-82510-06	**REC6K1-82510-07**	113
6K1-82570-13	**REC6K1-82570-13**	128
6K4-11422-00	**REC6K4-11422-00**	256
6K4-11432-00	**REC6K4-11432-00**	256
6K4-11651-00	**REC6K4-11651-00**	260
6K5-11601-02	**REC6K5-11601-02**	241-262-264-266
6K5-11601-12	**REC6K5-11601-12**	241-262-264
6K5-11601-22	**REC6K5-11601-22**	241-262-264
6K5-11631-03-95	**REC6K5-11631-03K**	264-266
6K5-11635-03	**REC6K5-11635-03K**	264
6K5-11636-03	**REC6K5-11636-03K**	264
6K5-11681-00	**REC6K5-11681-00**	261
6K5-14301-03 + 6K5-14302-03 + 6K5-14303-03	**REC6K5-14301-03**	92-93
6K5-45551-00	**REC6K5-45551-00**	388-390
6K5-45560-00	**REC6K5-45560-00**	388-390
6K5-45570-00	**REC6K5-45570-00**	390
6K5-W0001-02	**REC6K5-W0001-02**	251
6K5-W0078-01	**REC6K5-W0078-01**	152-156
6K7-11633-00	**REC6K7-11633-00**	261-265
6K7-13645-A2	**REC6K7-13645-A2**	276
6K7-13646-A2	**REC6K7-13646-A2**	276
6K7-81800-10	**PH130-0051**	110
6K7-W0093-09	**REC6K7-W0093-09**	97
6K8-41122-A1	**REC6K8-41122-A1**	141-229
6K8-41124-A1	**REC6K8-41124-A1**	141-229
6L2-11181-A3	**REC6L2-11181-A1**	248-254
6L2-11193-A1	**REC6L2-11193-A1**	255
6L2-13621-00	**REC6L2-13621-00**	274
6L2-14384-00	**REC6L2-14384-00-00**	94
6L2-14385-00	**REC6L2-14385-00**	93-100
6L2-14399-00	**REC6L2-14399-00**	94
6L2-26301-00	**REC6L2-26301-00**	130
6L2-41112-A2	**REC6L2-41112-A3**	141
6L2-41114-A1	**REC6L2-41114-A1**	141
6L2-41133-A3	**REC6L2-41133-A3**	268
6L2-41134-00	**REC6L2-41134-00**	268
6L2-44322-00	**REC6L2-44322-00**	155
6L2-44352-00	**CEF500384**	143
6L2-44352-00	**REC6L2-44352-00**	66-143-155
6L2-44367-00	**PAF25-04050004**	66-154-155-293-297-355
6L2-45113-A1	**REC6L2-45113-A2**	253-254
6L2-45214-00	**PAF25-04000022**	295
6L2-45215-00	**PAF25-04000023**	295
6L2-45567-12	**PAF25-04000004-3**	295
6L2-45567-14	**PAF25-04000004-5**	295
6L2-45577-00-10	**PAF25-04070005-1**	295-355
6L2-45577-00-12	**PAF25-04070005-3**	295
6L2-45611-00	**REC6L2-45611-00**	355-388-389
6L2-45987-01	**REC6L2-45987-00**	295-355-357-405
6L2-81800-10	**PH130-0061**	110
6L2-81800-11	**PH130-0061**	110
6L2-81800-12	**PH130-0061**	110
6L2-W0001-A2	**REC6L2-W0001-03**	250-254
6L2-W0001-C3	**REC6L2-W0001-C3**	145
6L2-W0078-00	**REC6L2-W0078-00**	151-155
6L2-W0093-00	**REC6L2-W0093-00**	95
6L5-14301-03	**REC6L5-14301-03**	91-93
6L5-24251-00	**PAF4-04120005**	64-80-81-82
6L5-44322-00	**PAF2.6-03000015**	154-283
6L5-44323-00	**REC6L5-44323-00**	149
6L5-44352-00	**CEF500322**	143
6L5-44352-00	**PAF2.6-03000100**	64-283
6L5-44352-00	**REC6L5-44352-00**	143-154
6L5-45251-02	**CM6L5-45251-02**	159-343
6L5-45251-02	**CM6L5-45251-02**	169
6L5-45251-02	**CM6L5-45251-02A**	159
6L5-45251-02	**TEN01117**	166-169
6L5-45251-03	**CM6L5-45251-02**	345
6L5-45316-09	**PAF2.6-03000003**	283
6L5-45317-09	**PAF2.6-03000002**	283
6L5-45533-00-20	**PAF2.6-03000017**	283
6L5-45551-00	**PAF2.6-03000018**	283
6L5-45560-00	**PAF2.6-03000019**	283
6L5-45616-00	**PAF4-03080000**	283-285-287-405
6L5-45616-02	**REC647-45616-02**	345
6L5-45631-00	**PAF2.6-030000201**	283
6L5-45631-00	**PAF2.6-03000202**	283
6L5-45943-00-EL	**PAF2.6-03010000**	283
6L5-45949-00-EL	**PAF2.6-03010000**	402
6L5-45949-00-EL	**SOL3011-073-05S**	402
6L5-45987-01	**PAF4-03000025**	345
6L6-45371-00	**TEN01103**	164-169
6L6-45371-00	**TEN01103AL**	164-169
6L8-G3118-01	**REC6L8-G3118-01**	134
6M6-14385-00	**REC6H4-14985-01**	100
6N0-E1603-00	**REC6G1-11610-00**	223
6N0-G2177-00	**REC6N0-G2177-00**	134
6N0-G5251-00	**TEN01118**	346
6N0-G5551-00	**REC6N0-G5551-00**	346-387
6N0-G5551-A0	**REC68T-45551-00**	289
6N0-G5560-00	**REC6N0-G5560-00**	346-387
6N0-G5571-00	**REC6N0-G5571-00**	346-387
6N0-W0001-20	**REC6G1-W0001-C1**	346
6N0-W0078-A0	**REC6G1-W0078-A1**	150
6N0-WG525-00	**CM6G1-45251-03**	159
6N6-W0001-A3	**REC6E5-W0001-A2**	245
6N6-W0078-00	**REC6N6-W0078-02**	152
6N6-W0078-02	**REC6N6-W0078-02**	152-155-156-157
6N6-W0093-02	**REC6N6-W0093-02**	97-245
6N7-11411-00	**REC6N7-11411-00**	245-256
6N7-81800-00	**PH130-0051**	110
6N7-81800-01	**PH130-0051**	110
6N7-81800-10	**PH130-0051**	110
6P2-11181-00	**REC6P2-11181-00**	213-216-218
6P2-11182-00	**REC6P2-11182-00**	213-216-218
6P2-11193-00	**REC6P2-11193-00**	213
6P2-11194-00	**REC6P2-11194-00**	213
6P2-1131B-00	**REC6P2-1131B-00**	213
6P2-13761-00	**REC6P2-13761-00**	89-90
6P2-13761-11	**REC6P2-13761-11**	90
6P2-13906-00	**REC6P2-13906-00**	89-90
6P2-13907-00	**REC6AW-13907-00**	86
6P2-24563-00	**REC6P2-WS245-00**	81
6P2-41112-00	**REC6P2-41112-00**	213
6P2-41114-00	**REC6P2-41114-00**	213
6P2-41122-00	**REC6P2-41122-00**	213
6P2-44150-00	**REC6P2-44150-00**	339
6P2-44323-0	**REC6P2-44323-00**	149
6P2-44323-00	**REC6P2-44323-00**	155-157-339
6P2-45300-20-8D	**REC422-B25F**	278-339
6P2-45300-21-8D	**REC422-B25F**	278-339
6P2-45300-40-8D	**REC422-B25F**	278
6P2-45300-41-8D	**REC422-B25F**	278
6P2-45331-00-9S	**REC6P2-45331-00-9S**	339
6P2-45501-00	**REC6P2-45501-01**	339
6P2-45501-10	**REC6P2-45501-11**	339
6P2-46241-01	**REC6P2-46241-02**	213
6P2-46241-02	**REC6P2-46241-02**	267
6P2-81960-02	**REC6P2-81960-03**	116
6P2-81960-03	**REC6P2-81960-03**	116
6P2-W0001-00	**REC6P2-W0001-01**	217
6P2-W0001-01	**REC6P2-W0001-01**	213-217-218
6P2-W0078-00	**REC6P2-W0078-00**	73-153-155-157
6P2-WS245-00	**REC6P2-WS245-00**	81
6P245300208D	**REC422-B25F**	278
6P245300218D	**REC422-B25F**	278
6P245300408D	**REC422-B25F**	278
6P245300418D	**REC422-B25F**	278
6P3-24563-00	**REC6P3-WS24A-00**	81
6P3-24564-00	**REC6P3-24564-00**	71-72-73-81
6P3-45300-40-8D	**REC429-B25F**	278-339
6P3-45300-41-8D	**REC429-B25F**	278-339
6P3-45300-42-8D	**REC429-B25F**	278
6P3-WS24A-00	**REC6P3-WS24A-00**	81
6P3-WS24A-01	**REC6P3-WS24A-00**	71-72-73-81
6P345300408D	**REC429-B25F**	278
6P345300418D	**REC429-B25F**	278
6P345300428D	**REC429-B25F**	278
6R0-44366-00	**PAF4-03000021**	283
6R3-11411-00	**REC6R3-11411-00**	256
6R3-24560-00	**REC6R3-24560-00**	80-81
6R3-81960-10	**REC6R3-81960-10**	116
6R3-82563-00	**REC6R3-82563-01**	122
6R3-82563-01	**REC6R3-82563-01**	122
6R3-85570-01104	**REC6R3-85570-01**	104
6R3-W0001-A3	**REC6R3-W0001-03**	252
6R4-13200-00	**REC6R4-13200-02**	84
6R4-13200-01	**REC6R4-13200-02**	84
6R4-13200-02	**REC6R4-13200-02**	84
6R5-11361-11-93	**REC6R5-11631-11K**	245
6R5-11603-00	**REC6R5-11603-00**	265-266-267
6R5-11631-11-93	**REC6R5-11631-01K**	265-266-267
6R5-11631-11-93	**REC6R5-11631-11K**	265-266-267
6R5-11633-10	**REC6R5-11633-00**	245-247-261-265
6R5-11634-00	**REC6R5-11634-00**	265
6R5-11634-10	**REC6R5-11634-00**	245-247-265
6R5-11642-11-93	**REC6R5-11642-01K**	245-265-266-267
6R5-11642-11-93	**REC6R5-11642-11K**	265-266-267
6R5-116950-0	**REC6R5-11650-10**	245
6R6-W0001-02	**REC6R6-W0001-02-00**	250-254
6R7-11181-A1	**REC6R7-11181-A0**	248-254
6S1-41136-00	**REC6S1-41136-00**	270
6S1-85885-00	**REC6S1-85885-00**	90-102
6T4-45836-00	**CM6T4-45836-00**	159
6T4-45836-00	**TEN01122**	164
6T5-45251-00	**TEN01139**	167
6T5-45371-00	**CM6T5-45371-00**	161
6T5-45371-00	**TEN01119**	165
6T5-45373-00	**TEN01120**	166
6T545373-00	**CM6T5-45373-00**	159
6U0-45251-00	**TEN01157**	165-169
6U4-45251-00	**CM6U4-45251-00**	158-169
6U4-45251-00	**TEN01159**	167-169
6U4-45373-00	**TEN01158**	166-169
6UO-45251-00	**CM6U0-45251-00**	159-169
6V3-45251-01	**TEN01138**	164
6X2-85885-10	**REC6X2-85885-10**	103
6Y1-24268-00	**PAF15-10000003**	76
6Y1-24305-00	**GS31075**	76
6Y1-24305-01	**GS31075**	76
6Y1-24305-02	**GS31075**	76
6Y1-24305-05-00	**GS31074**	76
6Y1-24305-05-00	**GS31075**	76
6Y1-24305-06	**GS31074**	76
6Y1-24305-06-00	**GS31074**	76
6Y1-24305-06-00	**GS31075**	76
6Y1-24306-55-00	**PAF15-09000000**	74

R.O. / OEM	REF	
6Y1-24360-52	GS31187	74
6Y1-24360-52-00	GS31183	74
6Y1-24360-52-01	GS31183	74
6Y1-24360-52-02	GS31183	74
6Y1-24360-52-51	GS31183	74
6Y1-24360-52-52	GS31183	74
6Y2-24305-05-00	GS31076	76
6Y2-24305-06-00	GS31076	76
6Y2-24360-52	GS31090	74
6YJ-24167-00	PAF15-10000002	76
6YJ-24260-00	PAF15-10020000	76
6YJ-24260-10	PAF15-10020000	76
6YJ-24610-00	PAF15-10010000	75
6YJ-24610-01	PAF15-10010000	75
6YK-24305-01-00	GS31076	76
6YL-24305-01-00	GS31074	76
6YL-24305-01-00	GS31075	76
703-48152-00	PAF15-13020007W	129
703-48205-10	PAT85-08010000W	126
703-48205-10	REC703-48205-16	126
703-48205-11	REC703-48205-16	126
703-48205-12	REC703-48205-16	126
703-48205-13	REC703-48205-16	126
703-48205-14	REC703-48205-16	126
703-48205-15	REC703-48205-16	126
703-48205-16	REC703-48205-16	126
703-48205-17	REC703-48205-16	126
703-48205-18	REC703-48205-16	126
703-48205-1A	REC703-48205-16	126
703-48205-1B	REC703-48205-16	126
703-48205-20	REC703-48205-16	126
703-48205-21	REC703-48205-16	126
703-48230-10	PAF15-13000000W	126
703-48230-10	REC703-48230-14	126
703-48230-11	REC703-48230-14	126
703-48230-12	REC703-48230-14	126
703-48230-13	REC703-48230-14	126
703-48230-14	REC703-48230-14	126
703-48230-15	REC703-48230-14	126
703-48230-16	REC703-48230-14	126
703-48230-17	REC703-48230-14	126
703-48230-18	REC703-48230-14	126
703-48230-1A	REC703-48230-14	126
703-48230-20	REC703-48230-14	126
703-48230-21	REC703-48230-14	126
703-48245-00	PAF15-13010010W	129
703-48261-01	PAF15-13000500W	127
703-48272-12	PAF40-13000000EI	126
703-48293-10	PAF15-11000002W	129
703-48345-01	PAF25-07000007W	127
703-48861-11	PAT20-13000500W	1276
703-82510-12	PAF15-13000200W	113
703-82510-43	REC703-82510-44	114
703-82563-00	PAE4-10040100W	122-128
703-82563-01	PAE4-10040100W	122-128
703-82563-02	PAE4-10040100W	128
703-82563-20/21	REC703-82563-21	128
703-83383-00/01/02	PAF15-13000300W	128
703-83383-10/11	PAF15-13000300W	128
704-48205-11	REC704-48205-R0	127
704-48205-12	REC704-48205-R0	127
704-48205-13	REC704-48205-R0	127
704-48205-14	REC704-48205-R0	127
704-48205-15	REC704-48205-R0	127
704-48205-B0	REC704-48205-R0	127
704-48205-B1	REC704-48205-R0	127
704-48205-P0	REC704-48205-R0	127
704-48205-P1	REC704-48205-R0	127
704-48205-R0	REC704-48205-R0	127
704-48207-20	REC704-48207-R0	127
704-48207-21	REC704-48207-R0	127
704-48207-22	REC704-48207-R0	127
704-48207-30	REC704-48207-R0	127
704-48207-31	REC704-48207-R0	127
704-48207-39	REC704-48207-R0	127
704-48207-P1	REC704-48207-R0	127
704-48207-R0	REC704-48207-R0	127
704-82563-40/41/42	REC704-82563-41	128
704-82563-J0/J1/J2	REC704-82563-J2	128
704-82570-08	REC704-82570-12	128
704-82570-10	REC704-82570-12	128
704-82570-11	REC704-82570-12	128
704-82570-12	REC704-82570-12	128
7FK-12158-00	PA166F-010011	173-175-179
7FK-12165-00	PA166F-010010	173-175-179
7NJ-12117-00	PAF8-05030006	173-175
7NJ-12118-00	PAF8-05030007	173-175-179
90101-06M56	REC90101-06M56	353
90101-08001	PAGB/T5783-M8X35	235
90105-06035	PAGB/T5783-M6X35	189
90105-06039	PAGB/T5783-M6X16	173
90105-06M01	REC90105-06M01	363
90105-06M14	PAGB/T5783-M6X16	175
90105-06M25	PAGB/T5782-M6X45	175

R.O. / OEM	REF	
90105-08046-00	PAF4-04000033	175
90105-081A7	PAGB/T5783-M8X25	189
90105-08M36	PAF4-04000034	173-179-180
90105-08M36-00	PAF4-04000034	175
90105-08M76	PAF4-04000001	171
90105-08M78	PAF15-07000028	180-185
90105-090006	PAF20-05000002	187
90105-10M00	PAT85-00000012	323-327-331-335-337-375-379
90105-10M12	PAF25-00000011	295
90105-16M67	PAT85-00000012	315-319
90109-06M65	PAF25-05050006	191-195-197-201-203-205-207
90109-08022	REC90109-08022	239-243-247
90109-08M63	PAF25-05050019	193-199-207
90109-08M71	REC90109-08M71	245
90119-06M04	PAGB/T5783-M6X30	227
90119-06M10	REC90119-06M10	325-329-333-377-385
90119-06M40	PAGB/T5782-2000S	285
90119-06M48	PAGB/T5783-M5X12	295
90119-06M80-00	PAGB/T5783-M6X14	177
90119-06MA2	PAGB/T5783-M6X20	179-227
90119-06MA3	PAF8-05000022	187
90119-06MA3	PAGB/T5783-M6X20	191
90119-06MA3	PAGB/T5783-M6X25	187-191-235
90119-06MA4	PAGB/T5783-M6X30	235
90119-06MA5	PAGB/T5782-M6X35	191-203-205-233-241
90119-06MA5	PAGB/T5783-M6X25	191
90119-06MA5	PAGB/T5783-M6X30	195
90119-06MA5	PAGB/T5783-M6X35	243
90119-06MAS	PAGB/T5783-M6X35	191
90119-08M01	PAGB/T5782-M8X80	191
90119-08M13	REC90119-08M13	321-357-371
90119-08M14	REC90119-08M14	317-325-329-333-335-339-341-377-381-385-386
90119-08M15	REC90119-08M15	301-305-309-13-361
90119-08M21	REC90119-08M21	231
90119-08M33	REC90119-08M33	317
90119-08M87	REC90119-08M87	321
90119-08MA5	PAGB/T5783-M6X25	235
90119-09M00	PAF25-05000002	191-197-207
90142-05M06	PAGB/T820-M5X30	299
90149-06M00	REC90149-06M00	365
90151-05M05	PAGB/T820-M5X30	295
90152-05000	REC90151-05M00	315-319
90152-05010	PAGB/T820-M5X30	303-311
90152-05011	PAGB/T820-M5X20	293
90152-05M03	PAGB/T820-M5X25	289
90152-05M04	PAGB/T820-M5X25	350
90152-05M06	PAGB/T820-M5X30	307-365
90170-012138	REC90170-12138	365
90170-12138	REC90170-12138	299-303-307-311-359-361-369
90170-16M01	REC90170-16M01	315-319-323-327-371-375-379
90170-16M01-00	REC90170-16M01	373
90170-16M19	REC90170-16M19	331-335-337-383
90170-20137	PAF25-05000026	195
90170-28M37	PAF15-07030005	185
90170-30003	PAF20-05000029	189
90170-35M47	PAF25-05000026	193
90171-10M01	PAF15-06000016	349
90171-10M01	REC90171-10M01	289-291-293-405-351
90171-14013	REC90171-14013-00	295-353-355-357-405
90171-16011	REC90171-16011	299-303-307-311-315-319-359-361-365-369-371
90171-16011	REC90171-16011	405
90171-16011-00	REC90171-16011	373
90171-18M04	REC90171-18M04	323-327-331-335-337-341-375-379-383-405
90179-08M06	REC90179-08M06	291-293-348-351
90179-09M02	REC90179-09M02	353
90179-10M14	REC90179-10M14	295-355-357
90183-02M03	REC90183-02M03	315-319-331-335-337-341-373-383
90185-05002	PAGB/T6182-M5	289-293-315-319-323-327-331-335-337-341-350
90185-05002	PAGB/T889.1-2000	295
90185-22043	PAF15-01010007	132
90185-22M11	PAF15-01010007	132
9020-14377	REC90201-14377	227-260

R.O. / OEM	REF	
90201-02M00	REC90201-02M00	331-335-337-341-383
90201-06M94	PAGB/T5287-6	180-185
90201-08784	PAF20-05030013	189
90201-08818	PAF4-04000006	177
90201-08818	PAF4-04000006	64-66
90201-08818	PAGB/T5783-M5X12	183
90201-08818-00	PAF4-04000006	171
90201-08M54	PAF4-03000026	283-285-287-345-405
90201-10144	PAF25-05050018	201
90201-10M01	PAGB/T96-10	293-349
90201-10M01	REC90201-10M01	289-405
90201-10M06	PAF25-05050018	193-199-207
90201-11M49	PAF4-03000006	287-343
90201-12565	REC90201-12565	225-260
90201-13198	PAF2.6-03000021	283
90201-13201	PAF15-07040017	180-185
90201-15017	PAF15-06000020-1	293
90201-15423	PAF20-05030011	189
90201-16M00	REC90201-16M00	331-335-337-383
90201-17682	REC90201-17682	291-293-349-351
90201-17M00-00	REC90201-17M00	373
90201-20417	PAF25-04060007	295
90201-20417	REC90201-20417	233-235-239-241-243-260-261-353-355-357
90201-20M27	REC90201-20M27	229-260
90201-21M75	REC90201-21M75	245-247-261
90201-22008	PAT40-04050007	311
90201-22429	REC90201-22429	299-303-307-359-361-365-369
90201-22M01	REC90201-22M01	325-329-333-377-381-385
90201-23008	PAF2.6-04000003	173
90201-23M01	REC90201-23M01	245-247-261
90201-266P2	PAF4-04000004	175
90201-27M00	PAT40-04000008	301-305-309-313
90201-30M92	REC90201-30M92	323-327-375-379
90201-31M00	REC90201-31M00	331-383
90201-42014	REC90201-42014	339
90201-46M29	REC90201-46M29	227
90202-12060	PAF25-02000019	297-301-305-309-367-371
90204-11M49	PAF4-03000006	285-345
90206-22M19	REC90206-22M19	325-329-333-377-381-385
902082-04010	REC90282-04010	365
90209-18112	REC90209-18112	221-223-225-260
90209-20M23	REC90209-20159	227-260
90209-24M03	REC90209-24M03	229-260-261
90209-27M07	REC90209-27M07	233-235-260-261
90209-27M11	REC90209-27M11	261
90214-48M03	REC90214-48M03	365-369
90250-03M10	REC90250-03M10	343
90250-05010	REC90250-05010	291-293-295-349-351-353-355-357
90250-05036	REC90250-05036	347
90250-05046	REC90250-05046	345
90250-06023	REC90250-06023	299-303-307-311-359-361-363-365-369
90250-07M02	REC90250-07M02	315-319-371
90250-07M02-00	REC90250-07M02	373
90250-08M07	REC90250-08M07	323-327-335-375-379
90280-03017	PAGB/T1099-3X5X13	201
90280-03024	PAF25-04000015	155-297
90280-03024	REC90280-03024	154-155-156-309-313-346-347-349-357-359
90280-03M01	PAGB/T1099-3X5X13	180-185-189-195-203-205
90280-03M03	REC90280-03M03	154-156-301-305-317-355-361-369
90280-04002	REC90280-04002	335
90280-04M00	REC90280-04M00	156-363-367
90280-04M04	REC90280-04M04	154-155-156-321-371
90280-04M04-00	REC90280-04M04	373
90280-04M05	REC90280-04M05	155-156-157-325-329-333-339-377-381-385-386
90280-04M06	PAF25-05000024	199
90280-04M06	PAF4-04000019	193-207
90280-05049	REC90280-05049	229
90282-04010	REC90282-04010	315-319-323-353-357-359-369-371-373-375
90282-04M00	REC90282-04M00	327

R.O. / OEM	REF	
90304-08002	REC90340-08002	327-331-335-337-341
90340-08002	REC90340-08002	283-285-287-289-291-282-299-303-307-311-315-319-323-345-350-353-357-361-363-369-370-373-379-383
90340-08014	REC90340-08002	348-359
90340-08M04	REC90340-08002	295-343-347-365-375
90340-14M00	PAF15-04000002	237-241
90340-14M06	PAF15-04000002	191-195-197-201-203-205-207-209-211-213
90344-51003	PAF15-07010004	203-205
90381-14020	REC626-45316-09	351
90381-20001	REC90381-20001	133
90386-10M16	PAT85-01010203	133
90386-18M35	PAT85-00000017	133
90386-18M63	REC90386-18M63	133
90386-22M13	REC90386-22M13	133
90386-22M15	PAF15-01010302	133
90386-22M15	PAF25-01010002	133
90386-22M98	REC90386-22M98	133
90386-25M31	REC90386-25M31	133
90386-30048	PAF15-01000004	133
90386-30M60	PAF15-01000006	134
90386-30M77	PAT85-01020005	133
90386-30M77	REC90386-30M77	133
90386-30M78	PAT85-01020003	134
90386-38M89	REC90386-38M89	133
90386-44M03	PAF25-01000004	133
90386-52M02	PAF25-01000001	133
90387-06119	REC624-42542-00	98
90387-06806	PAF4-00000001	285-287
90387-06M14	PAF4-00000001	345
90387-06M69	PAF25-03000007	133
90387-13001	PAF15-07040009	185
90387-13002	PAF15-07040011	185
90387-13006	PAF20-05030006	189
90387-13M56	PAF15-07040012	180-185
90387-32002	REC90387-32002	229
90389-22M01	REC90389-22M01	299-303-307-311-361-365-405
90389-25M00	REC90389-25M00	315-319-371-405
90401-20M00	PAF15-07010003	183-191-197
90430-06014	PAF25-05050007	191-195-197-201-203-205-207
90430-06M03	REC90430-06M03	209-211-213-214-347-363-365
90430-08003	REC90430-08020	292-303-307-311-315-323
90430-08020	REC90430-08020	283-285-287-289-291-299-327-331-335-337-341-343-345-346-347-348-350-353-355-357-359-361-363-365-369-370-375-379-383-386
90430-08020	REC90430-08020	64-65-66-67-68-69-70-71-72-73
90430-08020-00	REC90430-08020	373
90430-08143	PAF4-04000006	197-209-211
90430-08800	PAF4-04000006	179
90430-08800-00	PAF4-04000006	175
90430-10M11	REC09168-12017	64-65
90430-12072	PAF25-02000005	297
90430-12072	REC90430-12072	301-305-309-361-367-371
90430-12072-00	REC90430-12072	373
90430-14115	PAF15-04000003	195-197-201-207-209-211-213-235-237-239-241
90430-14M09	PAF15-04000003	191
90430-14M09	PAF15-04000003	65-66-67-68-69-70-71-72-73
90445-07MA3	PAF2.6-04000015	237
90445-09061	PAF15-05000012	183
90445-09068	PAF25-03000008	191-197-207
90445-09086	PAF15-05000013	183
90445-09095	PAF25-03000009	191-197-207
90445-09104	PAF15-05000014	183-197-207
90445-09104	PAF25-03000009	195
90445-09105	PAF25-03000011	191
90445-09251	PAF25-03000011	195
90445-09807	PAF4-04000012	175
90445-09808	PAF2.6-04000007	173
90445-10M40	PAF40-05000053	209

R.O. / OEM	REF	
90445-10M46	PAF15-07010007	183
90464-07M05	PAF25-05000016	241
90465-06M86	PAT36-04000023	179
90465-08M83	PAF15-07010015	195
90465-08M99	PAGB/T5783-M5X12	171
90465-11M10	PAHT-2.5X50	293
90465-11M10	PAHT-2.5X60	180-191-197-207-209-213-301-305-309-313-317-321-325
90465-11M10	PAHT2.5X50	187
90465-11M59	REC09401-11425	75-213
90467-06016	PAHT-2.5X60	221-225-231-237-239-241
90467-08004	PAF4-04000030	75-243
90467-08M01	PAF4-03000005	285-287-345
90467-09M09	PAF4-04000030	64-65-67-191-225
90467-13M13	PAF4-05000010	75
90472-00247	NGKB8HS-10	243
90480-06M19	PAF20-05000036	189
90480-10627	PAF20-05000034	189
90480-10M16	PAF15-07050003	185
90480-12072	PAF15-07010027	185-209-211
90480-18065	REC90480-18065	235-239
90480-20M05	REC90480-20M05	139-209-211-243-245-247
90501-10064	PAF4-03030003	283
90501-10065	PAF25-04060002	295-355-357
90501-10M77	REC90501-10M77	331-335-337-341-383
90501-11M10	REC90501-11M10-00	329-333-339-381-385
90501-120A5	PAF20-05030007	189
90501-12M40	PAF15-07040014	180-185
90501-12M41	PAF15-07040013	185
90501-12M48	REC90501-12M48	315-319-373
90501-14M02	REC90501-14M02	235
90501-14M06	PAF15-06070002	291-349-351
90501-150A0	PAF15-06070002	293
90501-15M01	PAT40-04050002	361
90501-16233	REC90501-16233	369-371
90501-16M01	REC90501-16M01	359-365
90501-16M11	REC90501-16M11	139-209-211-243-245-247
90501-16M37	REC90501-16M37	323-327-375-379
90501-18001	PAF60-04020002	303-307-311
90501-450A2	REC90501-450A2	339
90606-12019	REC93606-12019	205
907-94469-05	PAF40-0701000EI	79
907-94469-05	REC90794-46866	78
907-94469-13	REC90794-46868	78
90790-77001	GS35032	75
90890-56878	GS35031	75
91490-25030	PAGB/T91-1.6X12	283-285-287-345
91490-30020	PAGB/T91-2.5X20	349
91490-30020	REC91490-30025	289-291-293-351
91490-30022	PAGB/T91-1.6X12	64-65-66-295-355-405
91490-30025	REC91490-30025	64-65-67-68-69-299-303-307-311-315-357-361-365-405
91490-30030	REC91490-30030	353-359-405
91490-30040	REC91490-30040	343
91490-40025	REC91490-40030	319-369-371
91490-40030	REC91490-40030	68-69-70-71-72-73-323-327-331-335-337-341-375-379-383-405
91490-40030-00	REC91490-40030	373
91690-30010	PAGB/T879.4-3X20	235
91810-03014	PAF15-07000001	181
92-858026QB1	RM92-858026QB1U6	84
92-858027QB1	RM92-858027QB1U3	84
92-8M0086220	RM92-8M0086220U6	84
92-8M0086221	RM92-8M0086221U3	84
92885-06600	PAGB/T97.1-6	177
92903-06600	PAGB/T848-6	203-205
92903-06600	PAGB/T97.1-6	187-197-207
92907-04600	PAGB/T97.1-4	195
92955-08600-00	PAGB/T97.1-8	177
92990-06300	PAGB/T861.1-6	293
92990-06300	PAGB/T861.1-87	283-287-289-295-343-347
92990-06600	PAGB/T97.1-6	185-231-301-343-347-349-367
92990-08600	PAGB/T97.1-8	367
92990-14200	PAGB/T97.1-14	355-357-405
92990-14200	PAGB/T97.1-8	295
92990-16200	REC92990-16200	359-369-405
92990-18200	REC92990-18200	323-327-331-335-337-375-379-405

R.O. / OEM	REF	
92995-05600	PAGB/T97.1-5	191-197-207
92995-05600	PAGB/T97.1-8	183-203-205
92995-06600	PAGB/T5783-M5X12	185-237
92995-06600	PAGB/T5783-M6X16	371
92995-06600	PAGB/T96-6	195
92995-06600	PAGB/T97.1-6	171-173-175-179-180-195-197-201-203-205-209-211-213-221-223-225-235-239-287-289-291-317-321-339-351-355
92995-06600	PAGB/T97.1-8	185-227-229-233-241
92995-08600	PAGB/T97.1-8	179-209-214-325-329-333-335-337-341-343-363-369-377
92995-10100	PAGB/T97.1-10	299
92995-10600	PAGB/T97.1-8	295-299-303-307-311-315-319-331
9306-306V5	REC93306-306V5	233-258
93101-10M14	PAF4-03000027	285-287
93101-10M14	REC93101-10M14	345
93101-10M25	REC93101-10M25	221
93101-11M23	REC93101-11M23	289-346
93101-12M70	REC93101-12M70	341
93101-13018	REC93101-13018	227
93101-13M12	PAF4-03050002	283-285
93101-13M12	REC93101-13M12	287-345
93101-13M27	REC93101-13M27	270
93101-14M01	REC93101-14M01	225
93101-15074	REC93101-15074	289-346-347
93101-16001	REC93101-16001	229-233
93101-17054	REC93101-17054	291-293-349-351
93101-18050	REC93101-18050	347
93101-20001	REC93101-20048	292
93101-20048	REC93101-20048	291-349-351-363
93101-20M07	REC93101-20M07	295-353-355-357
93101-20M29	REC93101-20M29	221-225
93101-20M34	REC93101-20M34	223
93101-22067	REC93101-22067	353-355-359-365-367-369
93101-22067	REC93101-22M00	297
93101-22M00	REC93101-22M00	299-303-307-311-361-363
93101-22M15	REC93101-22M15	245-247
93101-22M60	REC93101-22M60	301-305-361
93101-23070	REC93101-23070	317-357-359-369
93101-250-18	REC93101-25018	227
93101-25M03	REC93101-25M03	315-319-321-371
93101-25M03-00	REC93101-25M03	373
93101-25M28	REC93101-25M35	231
93101-25M57	REC93101-25M57	309-313
93101-28M16	REC93101-28M16	325-329-333-335-339-377-381-385-386
93101-300002	REC93101-30002	335-337
93101-30M17	REC93101-30M17	323-327-331-375-379-383
93101-30M33	REC93101-30M33	235
93102-10004	PAF4-04060004	177-179
93102-15M32	REC93102-15M32	220
93102-18M21	PAF15-07040008	180-185
93102-20070	PAF2.6-04010001	220
93102-20108	PAF2.6-04010001	171-177-179
93102-20108	PAGB/T97.1-8	183
93102-20M25	REC93102-20M25	223-225
93102-22010	PAF20-05030005	189
93102-23096	REC93102-23096	237
93102-25008	REC93102-25008	229
93102-25014	PAF15-07030006	189
93102-25090	PAF4-04010004	177
93102-25090	PAGB/T5783-M5X12	183
93102-25M28	REC93102-25M28	237
93102-25M48	REC93102-25M48	227
93102-25M52	PAF15-07030007	183
93102-26M27	REC93102-26M27	231
93102-28135	REC93102-28135	239
93102-30M05	REC93102-30M05	243
93102-30M23	REC93102-30M23	241
93102-30M56	REC93102-30M56	233
93102-32M07	REC93102-32M07	229-239
93102-35M13	REC93102-35M13	245-247
93102-35M18	REC93102-35M18	235
93102-35M47	PAF25-05020002	193-199
93102-35M51	PAF15-07030006	183
93102-36M02	REC93102-36M02	243
93102-36M24	REC93102-36M24	241
93102-37004	PAF25-05050021	189

R.O. / OEM	REF	
93102-37M40	PAF25-05050021	193-195-199-201-203-205-207
93102-38008	REC93102-38008	211-213
93102-38M59	REC93102-38008	209
93102-40M14	REC93102-40M14	245-247
93102-43M42	PAF25-05020003	193-195-199-201-203-207
93102-48009	REC93102-48009	209
93102-60004	REC93102-60004	211
93102-63008	REC93102-63004	213
93103-09M41	PAF2.6-03000004	283
93103-10052	REC93103-10052	343
93103-11051	REC93103-11051	343
93104-16M01	REC93104-16M01	235-237
93104-16M04	REC93104-16M01	231
93104-18049	REC93104-18049	239
93104-20M02	REC93104-20M02	243
93104-22M07	REC93104-22M07	335
93106-09014	REC93106-09014	305-309-313-317-321-325-329-333-335-339-369-371-377-381-385
93106-09014-00	REC93106-09014	373
93106-18M01	REC93106-18M01	241
93109-44M00	REC93109-44M00	132
93110-23M00	REC93110-23M00	227
93210-05001	PAF2.6-03000009	283
93210-06ME6	REC90430-08020	295
93210-06ME6	REC93210-06ME6	289-291-292-297-301-351-361
93210-07003	REC93210-07540	329
93210-09004	PAF2.6-04060002	171
93210-12MG9	PAF25-05050013	193-199-207
93210-13M63	PAGB/T3452.1-13X2	64-65-68-69-70-71-180-187-195-201-203-205
93210-14515	PAF25-05050014	193-199-207
93210-19MJ1	REC93210-19MJ1	211-213
93210-22164	PAGB/T3452.1-25.8X2	355
93210-22M02	REC93210-22M02	235
93210-24M79	PAF4-04000008	177-180-185-201-203-205
93210-24M79	PAJASOF40431-025	64-65-69-70-171-181-187-191-195-197-207-209-211-213-214
93210-25552	REC93210-25552	211-213
93210-26130	PAGB/T3452.1-25.8X2	297-355
93210-32738	PAGB/T3452.1-32.5X1.8	65-66-67-68-69-70-71
93210-32738	REC93210-32738	65-66-68-69
93210-33M49	PAJASOF404-19-033	335-339
93210-33M85	PAJASOF404-19-033	283
93210-33M85	PAJASOF404-19-033	64-154
93210-33MG4	REC93210-33MG4	301-305-309-313-361
93210-33MH2	PAF25-05050015	193-199-207
93210-35537	PAF4-04060002	171-177
93210-35537	PAGB/T345.2-D32.5XD1	179
93210-37160	REC93210-37160	325-329-333-335-339-341-377-381
93210-37M67	REC93210-37M67	385-386
93210-41042	REC93210-41042	357-359-367-369
93210-42101	REC93210-42101	343
93210-42159	REC93210-42159	223-225-231-239
93210-42M70	REC93210-42M70	225
93210-44398	PAJASOF404-31-045	351
93210-44398	REC93210-44398	154-155-289-291
93210-45161	PAF25-04050003	66-154-155-297-355
93210-45161	REC93210-45161	155
93210-46044	REC93210-46044	317-321-371
93210-46044-00	REC93210-46044	373
93210-46M16	REC93210-46M16	227-229-241-243
93210-48001	PAJASOF40424-050	313
93210-48214	PAJISB2401P48	283-285
93210-48214	REC93210-48214	287-341-345
93210-48MG8	REC93210-48MG8	301-309-361
93210-49046	REC93210-49046	154-289-293-317-321-346-359-369-371
93210-49046-00	REC93210-49046	373
93210-53M08	REC93210-53M08	289-346
93210-54534	REC93210-54534	333-339-385
93210-54M54	REC93210-54M54	223
93210-55M14	REC93210-54534	325-329-377-381
93210-56M80	PAF15-06080003	231-291-293-351
93210-57M00	REC93210-57M00	363
93210-57M09	REC93210-57M09	291-293-349-351

R.O. / OEM	REF	
93210-58144	REC93210-58677	325-329-377-381
93210-58677	REC93210-58677	347
93210-58M21	REC93210-58M21	229-237
93210-59MG7	REC93210-59MG7	154-156-301-305-309-313-361
93210-60MA3	REC93210-60MA3	357
93210-62269	REC93210-62269	239-243
93210-64488	REC93210-65752-00	333-335
93210-64ME7	REC93210-64ME7	295-355
93210-65M50	REC93210-65M50	233-235-241-295-355
93210-66M98	REC93210-66M98	359-365-369
93210-69MG6	REC93210-69MG6	299-303-307-311-341-361
93210-74M35	REC93210-74M35	245-247
93210-74MG5	REC93210-74MG5	299-303-311-361
93210-85M97	REC93210-85M97	371
93210-85M97-00	REC93210-85M97	373
93210-86M38	REC93210-86M38	155-156-157-325-329-333-339-377-381-385-386
93210-86M39	REC93210-86M39	315-319-323-375
93210-94003	REC93210-94003	335-341
93210-97M55	REC93210-97M55	327-379
93211-04001	REC93211-04001	245-247
93211-04384	REC93211-04384	331-337-383
93304-205U0	REC93304-205U0	257
93306-001U1	REC93306-001U1	299-303-307-311-361-394-395-396
93306-004UO	PAGB/T276-6004C2	345
93306-004YH	PAGB/T276-6004C2	289
93306-00501	REC93306-00501	291-293-349-351-393-394
93306-00519	REC93306-00519	347-393
93306-00612	PAGB/T276-6006/P6	295
93306-00612	REC93306-00612	353-355-357-394-395
93306-00702	REC93306-00702	359-365-369-394-395-396
93306-20401	REC93306-204Y7	363
93306-204U0	REC93306-204U0	221-223
93306-205B2	PANTN6205C3	179
93306-205U7	REC93306-205U2	257
93306-205U7	REC93306-205U7	227-257
93306-205YD	PAGB/T276-6004C2	177
93306-205YD	PAGB/T5783-M5X12	183
93306-206U5	REC93306-206U5	243-258
93306-207U0	REC93306-207U0	315-319-371-395-396-397
93306-207U0-00	REC93306-207U0	373
93306-208U0	REC93306-208U0	245-247-258-259-323-375-393-397
93306-209U0	REC93306-209U0	327-335-379-397-398-399-400
93306-209U1	REC93306-209U1	259
93306-210U0	REC93306-210U0	331-337-383-399-400
93306-240U0	REC93306-204U0	225-257
93306-272Y2	PAGB/T276-62/22/P6	171
93306-303V1	REC93306-306V1	235
93306-304U0	REC93306-304U0	257
93306-305-U8	REC93306-305U8	237-258
93306-30510	REC93306-30510	257-258
93306-305U3	REC93306-305U3	229-231-257-258
93306-306V1	REC93306-306V1	241-257-258
93306-307U0	REC93306-307U0	233-235-258
93310-112V0	REC93310-112V0	221-223-257-262
93310-32337	REC93310-32337	247-265
93310-32337	REC93310-32337	258-259
93310-323V6	REC93310-32337	245
93310-32668	REC93310-32668	247
93310-326V4	REC93310-326V4	259
93310-418U0	REC93310-418U0	225-257
93310-418V1	REC93310-418V1	221-223-257
93310-522W0	REC93310-522W0	257-258
93310-527W1	REC93310-527W1	258
93310-620V5	REC93310-620V5	227-257
93310-62406	REC93310-624U5	229-257-258
93310-636U4	REC93310-636U4	243-258
93310-727U0	REC93310-727U0	233-258
93310-727V7	REC93310-727V7	235-258
93310-730V6	REC93310-730V6	258
93310-730V8	REC93310-730V8	239-243-258
93310-835U8	REC93310-835U8	243-258
93310-836U0	REC93310-836U0	258-259
93310-836V2	REC93310-836V2	245-247-258-259
93310-954U1	REC93310-954U1	245-247-258-259
93310-954V3	REC93310-954V3	258-259
93310-959U0	REC93310-959U0	247

R.O. / OEM	REF	
93311-632U1	REC93311-632U1	239-258
93311-632U7	REC93311-632U7	231-257
93311-632V4	REC93311-632V4	257-258
93311-636U6	REC93311-636U6	241-257-258
93311-83280	REC93311-83280	331-335-337-383-399-400
93311-832U4	REC93311-832U4	239-258
93311-85894	REC93311-85894	335
93311-928U5	REC93311-928U5	329-381-397-398-399-400
93311-940U3	REC93311-940U3	245-247-258-259
93311-940V0	REC93311-940V0	247
93314-314V8	REC93341-214U1	291
93315-017U4	REC93315-017U4	353-394-395
93315-217U0	REC93315-217U0	363-395
93315-22004	REC93315-22004	295-353-355-357-394-395
93315-220V7	PAGB/T290F-2020	297
93315-220V7	REC93315-220V7	355-357-394-395
93315-314V8	REC93315-314V8	291-292-351-393-394
93315-317U2	REC93315-317U2	291-293-349-351-393-394
93315-32224	REC93315-32224	301-305-309-313-359-361-367-369-394-395-396
93315-324U1	REC93315-324U1	363-395
93315-325V1	REC93315-325V1	371-394-395-396
93315-325V1-00	REC93315-325V1	373
93315-425U7	REC93315-425U7	323-375-396-397
93315-425V3	REC93315-425V3	327-379-397-398-399-400
93315-43061	REC93315-43061	327-331-335-379-383-397-398-399-400
93315-430U8	REC93315-430U8	323-375-396-397-398-399-400
93315-430V5	REC93315-430V5	396-397-398-399-400
93315-628U9	REC93315-628U9	325-377-396-397-398
93316-003Y0	PANTN16003EY	283
93317-22204	REC93317-22204	299-303-307-311-359-361-365-369-394-395-396
93317-322V0	REC93317-322V0	315-319-396-397
93317-325U0	REC93317-325U0	315-319-371-396-397
93317-325U0-00	REC93317-325U0	373
93317-330U2	REC93317-330U2	325-329-333-339-377-381-385-396-397-398-399-400
93332-00001	REC93332-00001	301-305-309-313-357-361-369-394-395-396
93332-00003	REC93332-00003	299-303-307-361-365-369-394-395-396
93332-00005	REC93332-00005	291-293-295-349-351-353-355-393-394-395
93332-00023	REC93332-00023	394-395-396
93332-00048	REC93332-00048	327-331-397-398-399-400
93332-00079	PAT40-04000027	367
93332-00092	PAKOYOHI-CAP322/32	311
93332-000A5	REC93332-000A5	335
93332-000U0	REC93332-000U0	363-395
93332-000U3	REC93332-000U3	317-321-371-396-397
93332-000U3-00	REC93332-000U3	373
93332-000U5	REC93332-000U5	396
93332-000U7	REC93332-000U7	323-375-396-397
93332-000UE	REC93332-000UE	233-235-258
93332-000V3	REC93332-000V3	327-379-397-398-399-400
93332-000W1	REC93332-000W1	331-337-383-399-400
93332-000W5	PAHI-CAP32004JRKOYO	297
93332-000W7	REC93332-000W7	371-394-395-396
93332-000W7-00	REC93332-000W7	373
93332-000WS	REC93332-000W5	355-394-395
93340-67011	REC93340-67011	335-341
93341-214U1	REC93341-214U1	348-393-394
93341-41414	REC93341-41414	351-393-394
93341-93020	REC93341-93020	333-385
93341-930U9	REC93341-93020	339
93341-930V2	REC93341-930V2	325-329-377-381-396-397-398-399-400
93342-624U0	REC93342-624U0	363
93390-000U2	REC93390-000U2	397-398-399

R.O. / OEM	REF	
93390-000U0	REC93390-000U0	363-395
93399-99951	REC93399-99951	229-257
93420-22M03	PAGB/T893.1-22	287
93430-06005	PAGB/T896-86	343
93430-10M00	PAGB/T896-9	132
93440-08819	PAF2.6-03000012	283
93440-52008	REC93440-52009	227
93440-68M03	REC93440-68M03	233-235
93450-13022	REC93450-13022	221-223-225-262
93450-13130	PAF2.6-04020006	173
93450-14088	PAF4-04020006	175-219
93450-15023	PAF15-07020005	183-219
93450-15023	REC93450-15023	227-262
93450-17129	PAF20-05020002	189-219
93450-17129	PAF25-05020106	193-195-199-201-203-205-207-219-231
93501-04011	REC93501-04011	331-335-337-341-383
93503-16003	REC93503-16003	315-319-323-327-373-375-379
93507-32009	REC93507-32031	323-327
93507-32031	REC93507-32031	375-379
93511-32017	REC93511-32027	327
93511-32027	REC93511-32027	323-375-379
93602-14104	REC93602-14104	227-257-262
93602-14118	REC93602-14118	225-257-262
93602-18M12	REC93602-18M12	229
93602-20M02	REC93602-20M02	229-237-257-258-263-264
93603-18M09	REC93603-18M09	241-257-258-262-264
93603-21111	REC93310-32337	265
93603-21111	REC93603-21111	233-235-239-243-258-259-263-264-265
93604-07M13	PAF2.6-03000013	64-154-283
93604-08062	PAF25-04000007	214-223-239-301-305-309-313-349-357-363-367
93604-09066	PAF4-03000016	64-154-285-287-345
93604-09068	PAF2.6-03000013	343
93604-10M03	PAF15-00000013	201-317-351
93604-10M03	PAF25-04000007	195-203-205-297-321-355-371
93604-12M07	PAF15-00000013	171-173-283-289-291-293-351
93604-12M07	PAF15-07000013	183
93604-18080	PAF4-03000013	283-285-287-345
93605-14143	PAF25-05050016	193-199-207
93606-11M24	REC93606-12019	297
93606-12019	REC93606-12019	187-195-201-203-207-209-211-213-214-221-227-229-231-237-299-303-307-311-315-319-325-329-333-335-339-341-349-367-371-377-381-385
93606-42019	REC93606-12019	386
93608-12063	PAF25-00000014	235-239-241-243
93608-12M05	REC93608-12M05	323-331-337-341-383
93700-06M03	PAJB/T9740.1-M6	133
94701-00110	NGKBR7HS	108
94701-00110-00	NGKBR7HS	108
94701-00195	NGKBR8HS	108
94701-00195-00	NGKBR8HS	108
94701-00204	NGKBR8ES	108
94701-00248-00	NGKBR6HS	108
94701-00282	NGKCR6HS	181
94701-00282-00	NGKCR6HS	108
94701-00300-00	NGKCR5HSB	108
94701-00309-00	NGKBR9HS-10	108
94701-00365-00	NGKBR6FS	108
94701-00375	NGKDPR6EA-9	65-66-67-68-197-207
94701-00375	NGKDPR7EA-9	185-191
94701-00375-00	NGKDPR6EA-9	108
94701-00406-00	NGKDPR5EA-9	69-108
94702-00040	NGKB7HS	220-235-239
94702-00041	NGKB8HS	239
94702-00160	NGKB8HS-10	239
94702-00217	NGKB7HS-10	225-229
94702-00247	NGKBR8HS-10	237-241-245
94702-00247-00	NGKBR8HS-10	108
94702-00248	NGKBPR7HS	175
94702-00248	NGKBR6HS	64-173
94702-00249-00	NGKBR5HS	108
94702-00271	NGKB7HS-10	227

R.O. / OEM	REF	
94702-00271	NGKBR7HS-10	223-229-231-237
94702-00271	NGKBR8HS-10	247
94702-00271-00	NGKBR7HS-10	108
94702-00272	NGKBR7HS	221-233
94702-00274	NGKBR6HS-10	64-65-180-223
94702-00274-00	NGKBR6HS-10	108
94702-00309	NGKBR9HS-10	245
94702-00372	NGKCR6HSB	64-173-179
94702-00372-00	NGKCR6HS	108
94702-00391	NGKLFR5A-11	69-70-71-72-209-211
94702-00391-00	NGKLFR5A-11	108
94702-00396	NGKBR8ES-11	108
94702-00400	NGKLFR6A-11	70-72-73-213-214
94702-00400-00	NGKLFR6A-11	108
94702-00404-00	NGKBKR7EKU	108
94702-00405-00	NGKBKR6EKU	108
94702-00409	NGKCR9EB	108
94702-00418	NGKDPR6EB-9	65-66-67-68-69-187-195-201-203
94702-00418-00	NGKDPR6EB-9	108
94702-00429	NGKLKR7E	69-205
94702-00429-00	NGKLKR7E	108
94702-00437-00	NGKLKR6E	71-108
94702-00440	NGKLKR6E-9N	70
947395-06040	PAGB/T5782-M6X45	349
95380-05600	PAGB/T889.1-M5	299-303-307-311-365
95380-06700	REC95380-06700	301-361
95817-06012	PAGB/T5783-M6X12	171
95817-06012-00	PAGB/T5783-M6X12	177
95895-06012	PAGB/T5783-M6X14	287
95895-06012	PAGB/T5783-M6X35	343-347
95895-06016	PAGB/T5783-M5X12	287-289
95895-06016-00	PAGB/T5783-M5X12	285
95895-06020	PAGB/T5783-M5X12	283
95895-06035	PAGB/T5782-M6X125	295
95895-06035	PAGB/T5783-M6X30	293
970-95-06030	PAGB/T5783-M6X30	231
97013-05010	PAGB/T5783-M5X10	179
97013-06012	PAGB/T5783-M6X12	189
97013-06016	PAGB/T5783-M5X12	185-223-229
97013-06035	PAF15-07000030	197
97013-06035	PAGB/T5782-M6X125	193
97013-06035	PAGB/T5782-M6X125	285
97013-06040	PAF20-05010007	187
97013-06045	PAGB/T5783-M5X12	171
97075-08025	PAGB/T5783-M8X25	209
97075-08035	PAGB/T5783-M8X35	289
97075-10040	REC97075-10040	299-303-307-311-319-369-370
97080-08025	PAGB/T5783-M8X25	289-291-292-351
97080-08045	REC97080-08045	289-291-351
97090-06014	PAGB/T5783-M6X16	343
97095-05012	PAGB/T5783-M5X12	191
97095-05012	PAGB/T818-M5X12	197-203-205-207
97095-05016	PAGB/T5783-M5X16	343
97095-0512	PAGB/T5783-M5X12	183
97095-06010	PAGB/T5783-M6X10	197-349-363
97095-06016	PAGB/T5783-M6X16	221-223-225-227-231-235-239-321-339
97095-06016	PAGB/T97.1-6	371
97095-06020	PAGB/T5783-M6X20	171-173-179-180-191-195-197-201-203-205-207-209-213-233-237-241-291-347-351
97095-06020-00	PAGB/T5783-M6X20	175
97095-06025	PAGB/T5782-M6X25	209-213-231
97095-06030	PAGB/T5783-M6X30	180-211-213-343-346
97095-06030	REC90101-06M56	209
97095-06035	PAGB/T5783-M5X12	185
97095-06040	REC97095-06040	347-355
97095-06045	REC97095-06045	211-287-346
97095-08014	PAGB/T5783-M8X14	171-179
97095-08014-00	PAGB/T5783-M8X14	175
97095-08020	PAF4-04000001	331-335-337-341
97095-08020	PAGB/T5783-M8X20	179
97095-08020-00	PAF4-04000001	177
97095-08020-00	PAGB/T5783-M8X20	177
97095-08025	PAGB/T5783-M8X25	299-303-307-311-325-329-333-339
97095-08035	PAGB/T5783-M8X35	303-307-311
97095-08045	REC97095-08045	293-363-367-369
97095-08055	REC97095-08055	363-367-369
97395-06020	PAGB/T5783-M6X20	349
97395-08045	REC97095-08045	359

R.O. / OEM	REF	
97395-08055	REC97095-08055	359
97395-08070-00	REC97395-08070	373
97513-06525	PAGB/T5783-M6X25	185
97575-06520	PAGB/T5783-M6X20	293
97575-08530	PAGB/T5783-M8X30	293
97575-08550-00	PAGB/T5783-M5X12	183
97575-08550-00	PAGB/T5787-1986	177
97595-06520	PAGB/T5783-M6X20	185-187
97595-06520	PAGB/T97.1-8	183-191
97595-06520	PAGB/T97.1-8	191-193-283
97607-04210	PAGB/T818-M4X10	187
97780-40112	PAGB/T845-ST4.2X16	349
97780-50510	PAGB/T845-ST4.8X9	349
97880-05025	PAGB/T818-M5X25	173-179-203-205
97880-05025-00	PAGB/T818-M5X25	175
98503-04066-00	PAGB/T818-M4X6	177
98507-04010	PAGB/T818-M4X10	195-197-201-203-205-207
98580-06016	PAGB/T818-M6X16	365
98780-04015	PAGB/T820-M4X12	213-239
98780-04016	PAGB/T820-M4X12	187-209-237
98780-05016	PAGB/T818-M5X16	211
98980-05025	PAGB/T818-M5X25	187
99001-06600	PAGB/T896-86	283-285-345
99001-06600	REC99001-06600	287-346
99001-08600	REC99001-08600-00	305-309-313-317-321-325-329-333-335-339-369-371-377-381-385
99080-10600	PAGB/T896-9	132
99510-10114	PAF15-07000001	180-183-185
99510-10114	PAF4-04000003	175-177-179
99530-08012	PAF25-00000014	191-197-201-203-205-207
99590-10114	REC99590-10114	337-383
99999-02808	REC99999-02808	134
99999-03116	PAF15-01010301S	131
99999-03249	PH130-0007	111
99999-03938	PH130-0051	110
CS3-43880-00	PH200-T036	122
F5-85570-13	REC6F5-85570-11	105
JA9-12153-00	PA166F-000001	173-175-179
K0A-A3721-00	RECK0A-A3721-00	209
K0A-A3722-00	RECK0A-A3722-00	209
MAR-24563-00	RACS3213	78
MAR-6YT30-02-12	SOL3231-101-13	402
N26-13440-00	RECN26-13440-00	83-214
N26-13440-02	RECN26-13440-00	73-83
N51-11325-01	TEN01160T	167
YMD-63021-01	REC2TU6	84
YMD-63021-04	REC2TU3	84
YMD-63050-01	REC10W30U6	84
YMD-63050-04	REC10W30U3	84
YMD-63060-01	REC10W40U6	84
YMD-63060-04	REC10W40U3	84
YMD-RCBOX-00-10	GS40015	127
YMM-21005-00-00	PRE3300C05	130
YMM-21006-C8-00	PRE3300C06	130
YMM-21007-C8-00	PRE3300C07	130
YMM-21008-C8-00	PRE3300C08	130
YMM-21009-C8-00	PRE3300C09	130
YMM-21010-C8-00	PRE3300C10	130
YMM-21011-C8-00	PRE3300C11	130
YMM-21012-C8-00	PRE3300C12	130
YMM-21013-C8-00	PRE3300C13	130
YMM-21014-C8-00	PRE3300C14	130
YMM-21015-C8-00	PRE3300C15	130
YMM-21016-C8-00	PRE3300C16	130
YMM-21017-C8-00	PRE3300C17	130
YMM-21018-C8-00	PRE3300C18	130
YMM-21019-C8-00	PRE3300C19	130
YMM-21020-C8-00	PRE3300C20	130
YMM-21021-C8-00	PRE3300C21	130
YMM-21022-C8-00	PRE3300C22	130
YMM-21023-C8-00	PRE3300C23	130
YMM-21024-C8-00	PRE3300C24	130
YMM-21025-C8-00	PRE3300C25	130
YMM-21026-C8-00	PRE3300C26	130
YMM-21027-C8-00	PRE3300C27	130
YMM-21028-C8-00	PRE3300C28	130
YMM-21029-C8-00	PRE3300C29	130
YMM-21030-C8-00	PRE3300C30	130
YMM-2E114-00	RACS3240	79
YMM-2E227-00	RACS3227	79
YMM-2E227-01	RACS3227	79
YMM-2FE08-00	GS31166	79
YMM-2FE10-00	GS31065	79
YMM-2FS08-00	GS31066	79
YMM-2FS10-00	GS31067	79
YMM-2W114-00	RAC120R-RAC-01	79
YMM-2W227-01	RAC320R-RAC-01	78
YMM-2W227-01	RAC490R-RAC-01	79

SUZUKI

ES

GUÍA MANTENIMIENTO COLAS Y Y KITS 439

SISTEMA DE ALIMENTACIÓN Y FILTRACIÓN 442

ACEITE 450
BOMBA DE COMBUSTIBLE EN LÍNEA 442
ABRAZADERA PARA MANGUERA 443
ADAPTADOR LÍNEA DE COMBUSTIBLE 443
BOMBA DE COMBUSTIBLE 442
LÍNEA DE COMBUSTIBLE 442
MANGUERA DE COMBUSTIBLE 442
MUELLE TUBO COMBUSTIBLE 443
BOMBA DE COMBUSTIBLE 450
BOMBA DE COMBUSTIBLE ALTA PRESIÓN 451
BOMBA DE COMBUSTIBLE ELÉCTRICA 450
BOMBA DE COMBUSTIBLE MECÁNICA 450
JUNTAS VST 451
KITS MEMBRANAS Y JUNTAS 451
CARBURADOR 453
BOYAS 453
CARBURADOR COMPLETO 453
KITS CARBURADORES 453
COMPONENTES TANQUE Y CONECTORES 443
CONECTOR DE DEPÓSITO 443
PASAMAMPAROS 444
FILTRO DE ACEITE 449
GUÍA FILTROS DE ACEITE 449
JUNTA TAPÓN DE CÁRTER 449
FILTRO DE COMBUSTIBLE Y ELEMENTOS 445
BRACKET 445
FILTRO DECANTADOR DE COMBUSTIBLE COMPLETO CON VASO TRASPARENTE 445
FILTRO COMBUSTIBLE ALTA PRESIÓN 448
FILTRO DECANTADOR DE GASOLINA 446
FILTRO COMBUSTIBLE MONTAJE EN LÍNEA 447
FILTRO COMBUSTIBLE SEPARADOR AGUA 445
LLAVES PARA FILTRO 447
RACOR DE LATÓN 447
INYECTORES 452
GUÍA INYECTORES Y SENSORES 452

SISTEMA ELÉCTRICO 454

BOBINAS 455
REGULADOR-BOBINA 455
BUJÍAS 455
CDI Y CAJAS NEGRAS 460
DESCONECTORES DE SEGURIDAD 460
KITS 461
LLAVES DE ARRANQUE 458
MOTORES DE ARRANQUE 457
SOLENOIDE PARA MOTOR DE ARRANQUE 458
REGULADORES Y RECTIFICADORES 458
GUÍA REGULADORES Y RECTIFICADORES 459
RELÉ 460
RELÉ EMC 460
SENSORES 454
SENSOR CMP 454
SENSOR IAC 454
SENSOR MAP 454
TRIM, TILT & POWER TRIM 461
EXTRACTOR TAPONES DE TRIM 463
INSTALACIÓN ELÉCTRICA 461
POWER TRIM COMPLETO 462
SENSORES DE TRIM 463
TAPONES DE TRIM 463
TRIM COMPLETO 461

SISTEMA DE GOBIERNO 464

ARNÉS 466
EXTENSIÓN ARNÉS SISTEMAS ANALÓGICOS 466
COMPONENTES 466
CABLES DE ACELERADOR 467
CABLES DE CONTROL 467
CASQUILLO BASCULANTE 466
CLIP 466
CONECTORES CABLES 466
DIRECCIÓN HIDRÁULICA 467
PLACA CERRADURA SELECTOR 466
INTERRUPTORES PARA MANDOS 465
INTERRUPTOR PANEL COMPLETO O DOBLE ESTACIÓN 465
INTERRUPTOR PANEL SIMPLE 465
MANDOS DE CONTROL 464
INTERRUPTORES DE TRIM PARA MANDOS 464
MANDO LATERAL 464
MANDO PARA CONSOLA 465

SISTEMA DE REFRIGERACIÓN 468

ÁNODOS 476
ÁNODO CANADA METAL 476
ÁNODO TECNOSEAL 478
KITS DE ÁNODOS CANADA METAL 476
TORNILLO INOX 479
JUNTAS TAPA DEL ÁNODO 479
JUNTAS TÓRICA 479
BOMBA DE AGUA 471
CASQUILLO INOX 472
CUERPO BOMBA DE AGUA 471
GUÍA KITS BOMBA DE AGUA 476
JUNTAS BOMBA 473
JUNTAS BASE DE BOMBA 472
JUNTAS TÓRICA BOMBA DE AGUA 472
KITS DE REPARACIÓN BOMBA DE AGUA 474
TAPA DE LA BOMBA 472
IMPULSORES 469
CHAVETA 470
GUÍA IMPULSORES 469
TAPA DEL IMPULSOR 471
TERMOSTATO 468
TAPÓN DE AGUA 469
TERMOSTATO 468

PARTES DEL MOTOR 480

ÁRBOL DE LEVAS 483
CIGÜEÑAL 490
ARANDELAS DE BIELA 491
BIELAS 491
PARTES CIGÜEÑAL 490
RODAMIENTOS 490
RODAMIENTOS DE BIELA 491
DESPIECE MOTOR DE 4 TIEMPOS 481
DF40 • DF50 481
DF70 • DF80 • DF90 • DF100 482
DESPIECE MOTOR DE 2 TIEMPOS 480
DT40 • DTW 480
GUÍA CORREAS DE DISTRIBUCIÓN 492
JUNTAS DE MOTOR 4 TIEMPOS 483
GUÍA JUNTAS DE CULATA 484
JUNTAS BASE ACEITE 485
JUNTAS BASE DE MOTOR 484
JUNTAS BASE RETÉN 485
JUNTAS CUERPO DE MARIPOSA 485
JUNTAS DE ACEITE 485
JUNTAS DE CULATA 483
JUNTAS GUÍA CADENA 485
JUNTAS RETÉN SUPERIOR 486
JUNTAS TAPA DE BALANCINES 486
JUNTAS TAPA DE FILTRO 485
JUNTAS TAPA DE TERMOSTATO 486
JUNTAS TAPA SILENBLOCK 486
JUNTAS VÁLVULA DE PRESIÓN 486
KIT JUNTAS DE CULATA 484
JUNTAS DE MOTOR 2 TIEMPOS 487
GUÍA JUNTAS DE CULATA 487
JUNTAS BASE DE ACEITE 488
JUNTAS DE CULATA 487
JUNTAS DE CULATÍN 488
JUNTA TAPA DE TERMOSTATO 488
PISTONES 492
KIT DE PISTONES 492
RETENES DE ACEITE 488
JUNTAS TAPÓN DRENAJE 490

SISTEMA DE ESCAPE Y ADMISIÓN 493

SISTEMA DE ADMISIÓN 4 TIEMPOS 494
JUNTAS DE COLECTOR 494
JUNTAS TAPA DE ESCAPE 494
SISTEMA DE ESCAPE 4 TIEMPOS 493
JUNTAS CARTER 493
JUNTAS DE COLECTOR 493
JUNTAS MÚLTIPLE DE ESCAPE 493
SISTEMA DE ESCAPE 2 TIEMPOS 495
JUNTAS DE ESCAPE 495
JUNTAS TAPA DE ESCAPE 495
JUNTAS TUBO DE ESCAPE 495

UNIDADES DE TRANSMISIÓN 496

DESPIECE COLAS 4 TIEMPOS 496
DF4 • DF5 • DF6 496
DF8 • DF9.9 • DF15 • DF20 498
DF20 • DF25 504
DF30 506
DF40 • DF50 508
DF60 510
DF70 512
DF80 • DF90 • DF100 513
DF115 • DF140 514
DF150 • DF175 • DF200 • DF225 • DF250 517
DF300 519
COMPONENTES DE COLA 519
ARO TÓRICO DEL DIÁBOLO 521
ARO TÓRICO,VARILLA DE CAMBIO 520
DIÁBOLO 521
FUELLES VARILLA DE CAMBIO 520
GUÍA KITS DE JUNTAS 520
KITS JUNTAS Y RETENES 519
TORNILLOS Y JUNTAS DE DRENAJE 521
TUBO DRENAJE BOMBA DE AGUA 521
TUERCA VARILLA DE CAMBIO 520
SELECTOR 522
EXTREMO PARA SELECTOR 523
MUELLE APRA SELECTOR 522
PASADOR PARA SELECTOR 522
PIN 522
VARILLA PARA SELECTOR 523
RODAMIENTOS 523
ARANDELA / GRUESOS 526
BOMBA DE ACEITE 523
BOMBA DE AGUA 523
CIRCLIP BOMBA AGUA 524
DIÁBOLO 524
EJE TRANSMISIÓN INFERIOR 524
EJE TRANSMISIÓN SUPERIOR 524
PIÑÓN DE ATAQUE 525
PIÑÓN MARCHA ATRÁS 526
PIÑÓN MARCHA AVANTE 525

SISTEMA DE PROPULSIÓN 527

HÉLICES ALUMINIO E INOXIDABLE DE 3 Y 4 PALAS 527
GUÍA HÉLICES CON NÚCLEO INTEGRADO 528
GUÍA PIEZAS DE COLA 531
HÉLICES PARA NÚCLEO INTERCAMBIABLE 530
KIT CIERRE DE HÉLICE 531
NÚCLEO INTERCAMBIABLE 529
PASADOR DE HÉLICE 532
PASADOR DE LA TUERCA DE HÉLICE 532
SEPARADOR DE HÉLICE 532
TUERCA DE HÉLICE 532
REF --> RO 533
RO --> REF 538

EN

DRIVES MAINTENANCE GUIDE & KITS 439

FUEL & FILTRATION SYSTEM 442

CARBURATOR 453
- CARBURETOR KITS 453
- FLOATS 453
- FULL CARBURATOR 453

FUEL FILTERS AND ELEMENTS 445
- BRACKET 445
- COMPLET FUEL FILTER 446
- COMPLET FUEL FILTER WITH TRANSPARENT BOWL 445
- FILTER KEY 447
- HIGH PRESSURE FUEL FILTER 448
- IN-LINE FUEL FILTER 447
- RACORS 447
- WATER SEPARATING FUEL FILTER 445

FUEL PUMP 450
- DIAPHRAGMS & GASKETS 451
- FUEL PUMP ELECTRIC 450
- FUEL PUMP. HIGH PRESSURE 451
- FUEL PUMP MECHANICAL 450
- VST GASKETS 451

FUEL PUMP IN LINE 442
- CLAMP SMALL 443
- COUPLER 443
- FUEL HOSE 442
- FUEL LINE ASSEMBLY 442
- FUEL PUMP 442
- SPRING, FUEL PIPE 443

FUEL TANK COMPONENTS & CONNECTORS 443
- TANK CONNECTOR 443
- THRU HULL 444

INJEKTOR 452
- GUIDE INJECTORS & SENDERS 452

OIL 450

OIL FILTER 449
- OIL DRAIN PLUG GASKET 449
- OIL FILTER GUIDE 449

ELECTRIC SYSTEM 454

CDI & POWER PACK 460

COILS 455
- COIL 455
- REGULATOR-COIL 455

CUT OFF SWITCHES 460
- KIT 461

IGNITION STARTER SWITCH 458

REGULATOR AND RECTIFIERS 458
- REGULATORS AND RECTIFIERS GUIDE 459

RELAY 460

SENSORS 454
- SENSOR, CMP 454
- SENSOR, IAC 454
- SENSOR, MAP 454

SPARK 455

STARTERS 457
- SOLENOID FOR STARTER 458
- STARTERS 457

TRIM, TILT & POWER TRIM 461
- COMPLETE POWER TRIM ASSEMBLY 462
- COMPLETE TRIM ASSEMBLY 461
- TRIM CAP 463
- TRIM PLUGS EXTRACTOR 463
- TRIM SENSORS 463
- WIRING HARNESS 461

STEERING SYSTEM 464

ARNES 466
- ARNES EXTENSION ANALOGIC SYSTEM 466

COMPONENTS 466
- BLOCK CONTROL HANDLE 466
- BUSH SWIVEL 466
- CABLE CONNECTOR 466
- CLIP 466
- CONTROL CABLES 467
- HYDRAULIC STEERING 467
- THROTTLE THROTTLE 467

ENGINE CONTROLS 464
- CONSOLE CONTROL 465
- SIDE CONTROL 464
- TRIM SWITCH 464

SWITCHS FOR ENGINE CONTROLS 465
- PANEL TWIN STATION 465
- SWITCH 465

COOLING SYSTEM 468

ANODES 476
- ANODES CANADA METAL 476
- ANODES KIT 477
- ANODES TECNOSEAL 478
- GASKET, ANDOE COVER 479
- O-RING 479
- SS SCREW 479

IMPELLERS 469
- IMPELLERS GUIDE 469
- IMPELLER PLATE 471
- KEY 470

THERMOSTAT 468
- WATER FLUSH PLUG 469

WATER PUMP 471
- COVER 472
- GASKET 473
- GASKET BASE 472
- GUIDE, SERVICE KIT 476
- HOUSING 471
- INSERT CUP 473
- O-RING 472
- SERVICE KIT 474

ENGINE PARTS 480

CAMSHAFT 483

CRANKSHAFT 490
- CRANKSHAFT BEARINGS 490
- CRANKSHAFT PARTS 490
- CONNECTING ROD 491
- CONNECTING ROD, BEARINGS 491
- CONNECTING ROD, THRUST WASHER 491

ENGINE GASKETS 4 STROKES 483
- GASKET 484
- GASKET, CYLINDER COVER 486
- GASKET, CYLINDER HEAD 483
- GASKET, FILTER COVER 485
- GASKET KIT, CYLINDER HEAD 484
- GASKET, MOUNT OIL SEAL COVER 485
- GASKET, OIL GALLERY 485
- GASKET, PRESSURE VALVE 486
- GASKET, SILEMBLOCK COVER 486
- GASKET, THERMOSTAT COVER 486
- GASKET, THROTTLE BODY 485
- GASKET, TIMING CHAIN GUIDE BASE 485
- GASKET, UNDER OIL 485
- GASKET, UPPER SEAL 486

ENGINE GASKET 2 STROKES 487
- CYLINDER HEAD GASKET 487
- CYLINDER HEAD GASKET GUIDA 487
- GASKET, HEAD COVER 488
- GASKET, THERMOSTAT COVER 488
- GASKET, UNDER OIL 488

ENGINE PARTS 2 STROKES 480
- DT40 • DTW 480

ENGINE PARTS 4 STROKES 481
- DF40 • DF50 481
- DF70 • DF80 • DF90 • DF100 482

GUIDE TIMIMG BELT 492

PISTONS 492
- PISTON KITS 492

OIL SEALS 488
- OIL SEALS 488
- O-RING DRAIN CAP 490

EXHAUST & INTAKE SYSTEM 493

EXHAUST SYSTEM 4 STROKES 493
- GASKET, COLLECTOR 493
- OIL PAN, GASKET 493
- MULTI-EXHAUST GASKET 493

EXHAUST SYSTEM 2 STROKES 495
- GASKET, EXHAUST 495
- GASKET, EXHAUST COVER 495
- GASKET, EXHAUST TUBE 495

INTAKE SYSTEM 4 STROKES 494
- GASKETS, COLLECTOR 494
- GASKETS, EXHAUST COVER 494

UNIT DRIVES & COMPONENTS 496

BEARING 523
- CLIP 524
- DIAVOLO 524
- INITIATIVE GEAR 525
- LOWER, DRIVE SHAFT 524
- OIL PUMP 523
- POSITIVE GEAR 525
- REVERSE GEAR 526
- UPPER, DRIVE SHAFT 524
- WASHER / SHIM 526
- WATER PUMP 523

CLUTCH DOGS 522
- ARM, CLUTCH 523
- CLUTCH DOGS 522
- CLUTCH PIN 522
- PIN 522
- ROD PUSH 523
- SPRING CLUTCH 522

DRIVE COMPONENTS 519
- DIAVOLO, O-RING 521
- DRAIN EATER TUBE 521
- DRAIN, SCREW AND GASKETS 521
- GUIDE OF GASKETS KITS 520
- SEAL KITS 519
- SHIFT, BELOW 520
- SHIFT, O-RING 520
- TURNBUCKE, CLUTCH ROD 520

GEAR CASE PARTS 4 STROKES 496
- DF4 • DF5 • DF6 496
- DF8 • DF9.9 • DF15 • DF20 498
- DF20 • DF25 504
- DF30 506
- DF40 • DF50 508
- DF60 510
- DF70 512
- DF80 • DF90 • DF100 513
- DF115 • DF140 514
- DF150 • DF175 • DF200 • DF225 • DF250 517
- DF300 518

PROPULSION SYSTEM 527

3 & 4 BLADE ALUMINIUM & SS PROPELLERS 527
- COTTER PIN 532
- INTERCHANGEABLE HUB 529
- PROPELLERS APPLICATION WITH RUBBER HUB 528
- PROPELLERS FOR INTERCHANGEABLE HUB 530
- PROPELLER PIN 532
- PROPELLER NUT 532
- PROPELLER NUT KIT 531
- PROPELLER WASHER 532
- STERN DRIVE COMPONENTS, APPLICATION 531

REF --> OEM 533

OEM --> REF 538

IT

GUIDA MANUTENZIONE E KIT 439

SISTEMA DI ALIMENTAZIONE E FILTRAZIONE 442

CARBURATORE 453
- CARBURATORE COMPLETO 453
- GALLEGGIANTE 453
- KIT CARBURATORI 453

COMPONENTI SERBATOIO E CONNETTORI 443
- ATTACCO SERBATOIO 443
- PASSASCAFO 444

FILTRI BENZINA E RACCORDI 445
- CHIAVE DA FILTRO 447
- FILTRO BENZINA ALTA PRESSIONE 448
- FILTRO BENZINA PER MONTARE IN LÍNEA 447
- FILTRO DECANTATORE BENZINA 446
- FILTRO DI DECANTAZIONE BENZINA COMPLETO CON VASCHETTA TRASPARENTE 445
- FILTRO SEPARATORE ACQUA-BENZINA 445
- RACCORDI 447
- SUPPORTO 445

FILTRO OLIO 449
- GUIDA FILTRO OLIO 449
- GUARNIZIONE, TAPO COPPA L'OLIO 449

INIETTORE 452
- INIETTORE 452
- GUIDA INIETTORI E SENSORI 452

OLIO 450

POMPA BENZINA 450
- ADATTATORE 443
- FASCETTE 443
- GUARNIZIONE VST 451
- MEMBRANA E GUARNIZIONI 451
- POMPA BENZINA ALTA PRESSIONE
- POMPA BENZINA ELETTRICA 450
- POMPA BENZINA MECCANICA 450

POMPA BENZINA IN LINIA 442
- MOLLA TUBO COMBUSTIBILE 443
- POMPA BENZINA 442
- TUBO BENZINA 442
- TUBO CARBURANTE 442

SISTEMA ELETTRICO 455

BOBINE 455
- REGOLATORE - BOBINA 455

CANDELE 455

CDI E CENTRALINA 460

CHIAVETTA DI SICUREZZA 460
- KIT 461

CHIAVI DI ACCENSIONE 458

GUIDA REGOLATORE E RETTIFICATORE 459

MOTORINI AVVIAMENTO 457
- SOLENOIDE PER MOTORINI AVVIAMENTO 458

REGOLATORI E RADDRIZZATORI 458
- GUIDA REGOLATORI RADDRIZZATORI 459

RELE 460

SENSORE 454
- SENSORE CMP 454
- SENSORE IAC 454
- SENSORE MAP 454

TRIM, TILT & POWER TRIM 461
- ESTRATTORE PER TAPPI DI TRIM 463
- INSTALLAZIONE ELETTRICA 461
- MOTORINO POWER TRIM COMPLETO 462
- MOTORINO TRIM COMPLETO 461
- SENSORI TRIM 463
- TAPPO TRIM 463

SISTEMA DI GUIDA 464

CAVI 466
- ESTENSIONE SISTEMA ANALOGICO 466

COMANDI DI CONTROLLO 464
- COMANDO LATERALE 464
- COMANDO PER CONSOLLA 465
- INTERRUTTORE COMANDO 464

COMPONENTI 466
- CAVO ACCELERATORE 467
- CAVO COMANDO 467
- CAVO CONNETTORE 466
- CLIP 466
- PLACCA SERRATURA SELETTORE 466
- TAPO GIREVOLE 466
- TIMONERIA IDRAULICA 467

INTERRUTTORI PER CONTROLLO 465
- INTERRUTTORE PANELLO SINGOLO 465
- PANNELLO DOPPIA STAZIONE 465

SISTEMA DI RAFFREDDAMENTO 468

ANODI 476
- ANODI CANADA METAL 476
- ANODI TECNOSEAL 478
- KIT ANODI 477
- GUARNZIONE COPERCHIO ANODO 479
- O-RING 479
- VITE INOS 479

GIRANTE 469
- CHIAVETTA 470
- COPERCHIO GIRANTE 471
- GUIDA GIRANTE 469

POMPA ACQUA 471
- GHIERA INOX 473
- GUIDA KIT POMPA ACQUA 476
- COPERCHIO POMPA 472
- CORPO, POMPA ACQUA 471
- GUARNIZIONE BASE POMPA 472
- GUARNIZIONE POMPA 472
- KIT RICAMBI POMPA ACQUA 474

TERMOSTATO 468
- TAPPO ACQUA 469

PARTI MOTORE 480

ALBERO A CAMME 483

ALBERO MOTORE 490
- BIELLA 491
- CUSCINETTI ALBERO MOTORE 490
- CUSCINETTI BIELA 491
- PARTE ALBERO MOTORE 490
- RONDELLE BIELLA 491

GUARNIZIONI MOTORE 4 TEMPI 483
- GUARNIZIONE COPERCHIO PUNTERIE 486
- GUARNIZIONE BASE MOTORE 484
- GUARNIZIONE BASE OLIO 485
- GUARNIZIONE BASE PARAOLIO 485
- GUARNIZIONE CARTER, CATENA GUIDA BASE 485
- GUARNIZIONE COPERCHIO FILTRO 485
- GUARNIZIONE COPERCHIO SILEMBLOCK 486
- GUARNIZIONE COPERCHIO TERMOSTATO 486
- GUARNIZIONE CORPO FARFALLATO 485
- GUARNIZIONE OLIO 485
- GUARNIZIONE PARAOLIO SUPERIORE 486
- GUARNIZIONE TESTATA 483
- GUARNIZIONE VALVOLA PRESSIONE 486
- GUIDA GUARNIZIONE TESTATA 484
- KIT GUARNIZIONE TESTATA 484

GUARNIZIONI MOTORE 2 TEMPI 487
- GUARNIZIONE BASE OLIO 488
- GUARNIZIONE COPERCHIO TERMOSTATO 488
- GUARNIZIONE COPERCHIO TESTATA 488
- GUARNIZIONE DE TESTATA 487
- GUIDA GUARNIZIONE TESTATA 487

GUIDA CINGHIE DISTRIBUZIONE 492

PARAOLIO 488
- GUARNIZIONE TAPPO DRENAGIO 490

PARTI MOTORE 4 TEMPI 481
- DF40 • DF50 481
- DF70 • DF80 • DF90 • DF100 482

PARTI MOTORE 2 TEMPI 480
- DT40 • DTW 480

PISTONE 492
- KIT PISTONE 492

SISTEMA DI SCARICO E ASPIRAZIONE 493

SISTEMA ASPIRAZIONE 4 TEMPI 494
- GUARNIZIONE COLLETTORE 494
- GUARNIZIONE COPERCHIO SCARICO 494

SISTEMA SCARICO 4 TEMPI 493
- GUARNIZIONE CARTER 493
- GUARNIZIONE COLLETTORE 493
- GUARNIZIONE SCARICO MULTIPLO 493

SISTEMA SCARICO 2 TEMPI 495
- GUARNIZIONE COPERTURA SCARICO 495
- GUARNIZIONE SCARICO 495
- GUARNIZIONE TUBO SCARICO 495

UNITÀ DI TRASMISSIONE 496

COMPONENTI PIEDI 519
- DADO ASTA CAMBIO 520
- DIAVOLO 521
- GUIDA KIT GUARNIZIONE 520
- KIT GUARNIZIONE E TENUTE 519
- MANICOTTO MARCE 520
- O-RING DIAVOLO 521
- O-RING MARCE 520
- TUBO DRENAGGIO ACQUA 521
- VITI E GUARNIZIONE DRENAGGIO 521

CUSCINETTO 523
- DIAVOLO 524
- CERCLIP 524
- INFERIORE, ALBERO DI TRASMISSIONE 524
- PIGNONE ATTACCO 525
- PIGNONE MARCIA AVANTI 525
- PIGNONE MARCIA INDIETRO 526
- POMPA OLIO 523
- POMPA ACQUA 523
- RONDELLA / SPESSORE 526
- SUPERIORE, ALBERO DI TRASMISSIONE 524

PARTI PIEDI 4 TEMPI 496
- DF4 • DF5 • DF6 496
- DF8 • DF9.9 • DF15 • DF20 498
- DF20 • DF25 504
- DF30 506
- DF40 • DF50 508
- DF60 510
- DF70 512
- DF80 • DF90 • DF100 513
- DF115 • DF140 514
- DF150 • DF175 • DF200 • DF225 • DF250 517
- DF300 518

SELETTORE 522
- ASTA PRESSIONE 523
- HEBEL 523
- MOLLA SELETTORE 522
- PIN SELETTORE 522
- SELETTORE 522
- SPINOTTO 522

SISTEMA DI PROPULSIONE 527

ELICHE ALLUMINIO E INOX DA 2 E 4 PALE 527
- COPPIGLIA 532
- DADO DI ELICA 532
- DISTANZIALE ELICA 532
- ELICHE PER MOZZO INTERCAMBIABILE 530
- GUIDA ELICHE CON MOZZO 528
- GUIDA RICAMBIO PIEDE 531
- KIT CHIUSURA ELICA 531
- MOZZO INTERCAMBIABILE 529
- PIN ELICA 532

REF --> RO 533

RO --> REF 538

FR

GUIDE MAINTENANCE KITS 439

SYSTÈME D'ALIMENTATION ET DE FILTRATION 442

CARBURATEUR 453
- CARBURATEUR COMPLET 453
- FLOTTEUR DE CARBURATEUR 453
- KIT CARBURATEUR 453

COMPOSANTS ET CONNECTEURS DU RÉSERVOIR 443
- PASSE-CLOISON 444
- RACCORDS DE RESERVOIR 443

FILTRE À ESSENCE ET CARTOUCHE DE RECHANGE 445
- CLÉ À FILTRE 447
- FILTRE DÉCANTEUR ESSENCE 446
- FILTRE DÉCANTEUR ESSENCE AVEC BOL TRANSPARENT 445
- FILTRE À ESSENCE EN LIGNE 447
- FILTRE À ESSENCE HAUTE PRESION 448
- FILTRE SÉPARATEUR EAU-ESSENCE 455
- RACCORDS 447
- TÊTE DE FILTRE À ESSENCE 445

FILTRE À HUILE 449
- GUIDE FILTRE A HUILE 449
- JOINT DE VIDANGE 449

HUILES 450

INJECTEURS 452
- GUIDE INJECTEURS ET SONDES 452

POIRE À CARBURANT 442
- COLLIER 443
- POIRE À CARBURANT 442
- RACCORD COUPLEUR 443
- RESSORT, TUYAU DE CARBURANT 443
- TUYAU CARBURANT 442

POMPE À ESSENCE 450
- JOINTS VST 451
- MEMBRANES ET JOINTS 451
- POMPE À ESSENCE ELECTTRIQUE 450
- POMPE À ESSENCE HAUTE PRESSION 451
- POMPE À ESSENCE MECANIQUE 450

SYSTÈME ÉLECTRIQUE 455

BOBINES 455
- REGULATEUR-BOBINE 455

BOUGIES 455

CAPTEURS 454
- CAPTEUR CMP 454
- CAPTEUR IAC 454
- CAPTEUR MAP 454

CDI ET BOITIER ELECTRONIQUE 460

CONTACTEUR A CLÉ 458

COUPE CIRCUIT DE SECURITE 460
- KITS 461

DEMARREUR 457
- SOLENOIDE POUR DEMARREUR 458

REGULATEURS ET RECTIFIEURS 458
- GUIDE REGULATEURS ET RECTIFIEURS 459

RELAIS 460

TRIM, TILT & POWER TRIM 461
- BOUCHON VERIN DE TRIM 463
- EMETTEUR DE TRIM 463
- INSTALLATION ELECTRIQUE 461
- KIT EXTRACTEUR 463
- MOTEUR DE TRIM 461
- POWER TRIM COMPLET 462

SYSTÈME DE COMMANDE 464

BOITIER DE COMMANDE 464
- BOITIER LATERAL 464
- BOITIER POUR CONSOLE 465
- INTERRUPTEUR TRIM 464

COMPOSANT 466
- BAGUE 466
- CÂBLE D'ACCELERATEUR 467
- CÂBLES DE COMMANDE 467
- CALE POIGNEE DE CONTRÔLE 466
- CLIP 466
- DIRECTION HYDRAULIQUE 467
- EMBOUT DE CABLE 466

FAISCEAU ELECTRIQUE 466
- RALLONGE FAISCEAU SISTÈME ANALOGIQUE 466

INTERRUPTEUR DE CONTRÔLE 465
- BOITIER DE DEMARRAGE 2 MOTEURS 465
- TABLEAU DE COMMANDE SIMPLE 465

SYSTÈME DE REFROIDISSEMENT 468

ANODES 476
- ANODE CANADA METAL 476
- ANODE TECNOSEAL 478
- KIT ANODES 476
- JOINT, COUVERCLE D'ANODE 479
- JOINT TORIQUE 479
- VIS INOX 479

GUIDE TURBINES 469
- CLAVETTE 470
- GUIDE DE TURBINES 469
- PLAQUE DE POMPE À EAU 471

POMPE D'EAU 471
- CORPS DE POMPE À EAU 471
- GUIDE KITS POMPES A EAU 476
- INSERT INOX 473
- JOINTS, BASE DE POMPE À EAU 472
- JOINTS POMPE 473
- JOINTS, TORIQUE DE POMPE À EAU 472
- KIT REPARATION DE POMPE À EAU 474
- PLAQUE DE POMPE À EAU 472

THERMOSTAT 468
- BOUCHON DE REGROIDISSEMENT 469

PIÈCES MOTEUR 480

ARBRE À CAMES 483

GUIDE DES COURROIES DE DISTRIBUTION 492

JOINTS DE MOTEUR 4 TEMPS 483
- GUIDE JOINTS DE CULASSE 484
- JOINTS D'HUILE 485
- JOINTS D'HUILE SUPERIEUR 486
- JOINTS DE CACHE CULBUTEUR 486
- JOINTS DE COUVERCLE 485
- JOINTS DE COUVERCLE SILEMBLOCK 486
- JOINTS DE COUVERCLE DE FILTRE 485
- JOINTS DE GUIDE CHAINE 485
- JOINTS DE THROTTLE BODY 485
- JOINTS LOGEMENT THERMOSTAT 486
- JOINTS SOUPAPE DE PRESSION 486
- JOINTS BASE D'HUILE 485
- JOINTS DE CULASSE 483
- JOINTS DE TÊTE MOTRICE 484
- KIT JOINTS DE MOTEUR 484

JOINTS DE MOTEUR 2 TEMPS 487
- GUIDE JOINTS DE CULASSE 487
- JOINT DE COUVRE CULASSE 488
- JOINTS DE CULASSE 487
- JOINTS DE TÊTE MOTRICE 488
- JOINTS LOGEMENT THERMOSTAT 488

JOINT SPI 488
- JOINT DE VIDANGE 490

PIECES MOTEURS DE 4 TEMPS 481
- DF40 • DF50 481
- DF70 • DF80 • DF90 • DF100 482

PIECES MOTEUR 2 TEMPS 480
- DT40 • DTW 480

PISTONS 492
- KIT PISTON 492

VILEBREQUIN 490
- BIELLE 491
- PARTIES DE VILEBREQUIN 490
- RONDELLE DE BIELLE 491
- ROULEMENTS DE BIELLE 491
- ROULEMENTS VILEBREQUIN 490

SYSTÈME D'ECHAPPEMENT ET SYSTÈME D'ADMISSION 493

SYSTÈME D'ADMISSION 4 TEMPS 494
- JOINTS DE COLLECTEUR 494
- JOINTS DE COUVERCLE D'ECHAPPEMENT 494

SYSTÈME D'ECHAPPEMENT 4 TEMPS 493
- JOINTS COLLECTEUR 493
- JOINTS DE CARTER 493
- JOINTS DE PIPE D'ECHAPPEMENT 493

SYSTÈME D'ECHAPPEMENT 2 TEMPS 495
- JOINTS D'ECHAPPEMENT 495
- JOINTS DE PLAQUE D'ECHAPPEMENT 495
- JOINTS DE TUBE D'ECHAPPEMENT 495

EMBASES ET PIÈCES 496

CRABOT 522
- EMBOUT DE SELECTEUR 523
- PIN 522
- PIVOT 522
- RESSORT DE SELECTEUR 522
- TIGE DE POUSSEE 523

PIÈCES D'EMBASES DE 4 TEMPS 496
- DF4 • DF5 • DF6 496
- DF8 • DF9.9 • DF15 • DF20 498
- DF20 • DF25 504
- DF30 506
- DF40 • DF50 508
- DF60 510
- DF70 512
- DF80 • DF90 • DF100 513
- DF115 • DF140 514
- DF150 • DF175 • DF200 • DF225 • DF250 517
- DF300 518

PIÈCES D'EMBASES 519
- DIABOLO 521
- ÉCROU DU LEVIER DE CHANGEMENT DE VITESSE 520
- GUIDE DES KITS JOINTS 520
- JOINT TORIQUE DU LEVIER 520
- JOINT TORIQUE DU DIABOLO 521
- KITS JOINTS D'EMBASES 519
- SOUFFLET DU LEVIER DE CHANGEMENT DE VITESSE 520
- TUBE DE VIDANGE DE LA POMPE À EAU 521
- VIS ET JOINTS DE VIDANGE 521

ROULEMENT 523
- CLIPS 524
- DE DIABOLO 524
- DE POMPE À EAU 523
- DE POMPE À HUILE 523
- INFERIEUR D'ARBRE DE TRANSMISSION 524
- PIGNON D'ATTAQUE 525
- PIGNON DE MARCHE AVANT 525
- PIGNON DE MARCHE ARRIÈRE 526
- RONDELLE / CALE 526
- SUPERIEUR D'ARBRE DE TRANSMISSION 524

SYSTEME DE PROPULSION 527

HÉLICE ALUMINIUM ET INOX 3 ET 4 PALES 527
- CLAVETTE D'HÉLICE 532
- ÉCROU D'HÉLICE 532
- ENTRETOIS D'HÉLICE 532
- GUIDE DES HÉLICES ET MOYEUX 528
- GUIDE DES PIÈCES D'EMBASE 531
- GOUPILLE D'ECROU D'HELICE 532
- HELICES AVEC MOYEU INTERCHANGEABLE 530
- KIT ÉCROU D'HÉLICE 531
- MOYEU INTERCHANGEABLE 529

REF --> RO 533

RO --> REF 538

GUÍA KITS MANTENIMIENTO — MAINTENANCE GUIDE & KITS — GUIDA MANUTENZIONE E KIT — GUIDE MAINTENANCE KITS

	KIT	REF					
DF2 DF2.5 (2006-11)	REC17400-97820	REC17461-97JM0	TURBINA	IMPELLER	GIRANTE	TURBINE	1
		NGKCR6HSA	BUJÍA	SPARK PLUG	CANDELE	BOUGIE	1
		PAGB/T91-1.6X12	PIN BLOQUEADOR	COTTER PIN	COPPIGLIA	GOUPILLE	1
		REC09168-10022	ARANDELA TAPÓN	CAP, O-RING	RONDELLA TAPPO	JOINT DE VIDANGE	1
		REC59178-97J00	JUNTA DRENAJE COLA	DRAIN PLUG GASKET	GUARNIZIONE DRENAGGIO	JOINT DE VIDANGE D'EMBASE	2
		CM55321-87J00A	ÁNODO	ANODE	ANODO	ANODE	1
		PAJASOF404-19-033	TÓRICA	O-RING	O-RING	JOINT TORIQUE	1
		PAGB/T879.1-2.5X14	PIN	PIN	PIN	PIN	1
		REC17471-97J00	PLACA	PLATE	PIASTRA	PLAQUE	1
		REC17472-97J00	JUNTA BASE DE BOMBA	GASKET, CASE	GUARNIZIONE, BASE POMPA	JOINT, BASE POMPE	1
DF2 DF2.5 (2012+)	REC17400-97810	REC17461-97JM0	TURBINA	IMPELLER	GIRANTE	TURBINE	1
		NGKCR6HSA	BUJÍA	SPARK PLUG	CANDELE	BOUGIE	1
		REC91490-40030	PIN BLOQUEADOR	COTTER PIN	COPPIGLIA	GOUPILLE	1
		REC09168-10022	ARANDELA TAPÓN	CAP, O-RING	RONDELLA TAPPO	JOINT DE VIDANGE	1
		REC59178-97J00	JUNTA DRENAJE COLA	DRAIN PLUG GASKET	GUARNIZIONE DRENAGGIO	JOINT DE VIDANGE D'EMBASE	2
		CM55321-87J00A	ÁNODO	ANODE	ANODO	ANODE	1
		PAJASOF404-19-033	TÓRICA	O-RING	O-RING	JOINT TORIQUE	1
		PAGB/T879.1-2.5X14	PIN	PIN	PIN	PIN	1
		REC17471-97JL0	PLACA	PLATE	PIASTRA	PLAQUE	1
		REC17472-97JL0	JUNTA BASE DE BOMBA	GASKET, CASE	GUARNIZIONE, BASE POMPA	JOINT, BASE POMPE	1
DF4 DF5 DF6 (2002-10)	REC17400-91860	REC17400-98661	KIT BOMBA DE AGUA	WATER PUMP KIT	KIT POMPA ACQUA	KIT POMPE À EAU	1
		REC91490-40030	PIN BLOQUEADOR	COTTER PIN	COPPIGLIA	GOUPILLE	1
		NGKBPR6ES	BUJÍA	SPARK PLUG	CANDELE	BOUGIE	1
		REC09168-10022	ARANDELA TAPÓN	CAP, O-RING	RONDELLA TAPPO	JOINT DE VIDANGE	3
		CM55321-87J00A	ANODO	ANODE	ANODO	ANODE	2
		REC15410-98500	FILTRO COMBUSTIBLE	FUEL FILTER	FILTRO COMBUSTIBILE	FILTRE À ESSENCE	1
DF4 DF5 DF6 (2011+)	REC17400-91830	REC17400-98661	KIT BOMBA DE AGUA	WATER PUMP KIT	KIT POMPA ACQUA	KIT POMPE À EAU	1
		REC91490-40030	PIN BLOQUEADOR	COTTER PIN	COPPIGLIA	GOUPILLE	1
		NGKCPR6EA-9	BUJÍA	SPARK PLUG	CANDELE	BOUGIE	1
		REC09168-10022	ARANDELA TAPÓN	CAP, O-RING	RONDELLA TAPPO	JOINT DE VIDANGE	3
		CM55321-87J00A	ANODO	ANODE	ANODO	ANODE	2
		REC15410-98500	FILTRO COMBUSTIBLE	FUEL FILTER	FILTRO COMBUSTIBILE	FILTRE À ESSENCE	1
DF8A DF9.9A (2010+)	REC17400-99840	REC15410-98500	FILTRO COMBUSTIBLE	FUEL FILTER	FILTRO COMBUSTIBILE	FILTRE À ESSENCE	1
		REC16510-05240	FILTRO DE ACEITE	OIL FILTER	FILTRO OLIO	FILTRE A HUILE	1
		REC09204-02004	PIN BLOQUEADOR	COTTER PIN	COPPIGLIA	GOUPILLE	1
		REC09280-54001	TÓRICA	O-RING	O-RING	JOINT TORIQUE	1
		REC09168-12017	JUNTA	GASKET	GUARNIZIONE	JOINT	1
		REC59178-97J00	JUNTA DRENAJE COLA	DRAIN PLUG GASKET	GUARNIZIONE DRENAGGIO	JOINT DE VIDANGE D'EMBASE	2
		CM55321-87J00A	ANODO	ANODE	ANODO	ANODE	2
		REC09280-22019	TÓRICA	O-RING	O-RING	JOINT TORIQUE	1
		NGKCR6E	BUJÍA	SPARK PLUG	CANDELE	BOUGIE	2
		REC17400-99J01	KIT BOMBA DE AGUA	WATER PUMP KIT	KIT POMPA ACQUA	KIT POMPE À EAU	1
DF9.9 DF15 (2011-13)	REC17400-94810	REC17400-94J00	KIT BOMBA DE AGUA	WATER PUMP KIT	KIT POMPA ACQUA	KIT POMPE À EAU	1
		REC09204-02004	PIN BLOQUEADOR	COTTER PIN	COPPIGLIA	GOUPILLE	1
		NGKCPR6EA-9	BUJÍA	SPARK PLUG	CANDELE	BOUGIE	2
		REC16510-05240	FILTRO DE ACEITE	OIL FILTER	FILTRO OLIO	FILTRE A HUILE	1
		CM5033167	ANODO	ANODE	ANODO	ANODE	1
		REC09168-12017	JUNTA	GASKET	GUARNIZIONE	JOINT	1
		REC09168-10022	ARANDELA TAPÓN	CAP, O-RING	RONDELLA TAPPO	JOINT DE VIDANGE	2
		REC15410-98500	FILTRO COMBUSTIBLE	FUEL FILTER	FILTRO COMBUSTIBILE	FILTRE À ESSENCE	1
DF9.9B DF15A DF20A (2013+)	REC17400-89810	REC17400-99J01	KIT BOMBA DE AGUA	WATER PUMP KIT	KIT POMPA ACQUA	KIT POMPE À EAU	1
		REC09204-02004	PIN BLOQUEADOR	COTTER PIN	COPPIGLIA	GOUPILLE	1
		NGKCPR6EA-9	BUJÍA	SPARK PLUG	CANDELE	BOUGIE	2
		REC16510-05240	FILTRO DE ACEITE	OIL FILTER	FILTRO OLIO	FILTRE A HUILE	1
		REC09280-54001	TÓRICA	O-RING	O-RING	JOINT TORIQUE	1
		CM55321-87J00A	ANODO	ANODE	ANODO	ANODE	2
		REC09280-22019	TÓRICA	O-RING	O-RING	JOINT TORIQUE	1
		REC09168-12017	JUNTA	GASKET	GUARNIZIONE	JOINT	1
		REC59178-97J00	JUNTA DRENAJE COLA	DRAIN PLUG GASKET	GUARNIZIONE DRENAGGIO	JOINT DE VIDANGE D'EMBASE	2
		REC15410-87L00	FILTRO COMBUSTIBLE	FUEL FILTER	FILTRO COMBUSTIBILE	FILTRE À ESSENCE	1
DF20 DF25 V2 (2006+)	REC17400-95870	REC17400-95J02	KIT BOMBA DE AGUA	WATER PUMP KIT	KIT POMPA ACQUA	KIT POMPE À EAU	1
		REC16510-87J00	FILTRO DE ACEITE	OIL FILTER	FILTRO OLIO	FILTRE A HUILE	1
		NGKBKR6E	BUJÍA	SPARK PLUG	CANDELE	BOUGIE	2
		REC91490-40030	PIN BLOQUEADOR	COTTER PIN	COPPIGLIA	GOUPILLE	1
		REC09168-10022	ARANDELA TAPÓN	CAP, O-RING	RONDELLA TAPPO	JOINT DE VIDANGE	2
		REC09168-12012	JUNTA	GASKET	GUARNIZIONE	JOINT	1
		CM55321-87J00A	ANODO	ANODE	ANODO	ANODE	5
		REC09280-22019	TÓRICA	O-RING	O-RING	JOINT TORIQUE	1
		REC17413-95J00	CASQUILLO INOX	SLEEVE WATER PUMP	CAPPUCCIO	INSERT DE POMPE À EAU	1
		REC15410-87J30	FILTRO COMBUSTIBLE	FUEL FILTER	FILTRO COMBUSTIBILE	FILTRE À ESSENCE	1

	KIT	REF					
DF25 DF30 (2001-10)	REC17400-89820	REC17400-96403	KIT BOMBA DE AGUA	WATER PUMP KIT	KIT POMPA ACQUA	KIT POMPE À EAU	1
		REC16510-87J00	FILTRO DE ACEITE	OIL FILTER	FILTRO OLIO	FILTRE A HUILE	1
		NGKDCPR6E	BUJÍA	SPARK PLUG	CANDELE	BOUGIE	3
		REC91490-40030	PIN BLOQUEADOR	COTTER PIN	COPPIGLIA	GOUPILLE	1
		REC09168-10022	ARANDELA TAPÓN	CAP, O-RING	RONDELLA TAPPO	JOINT DE VIDANGE	2
		REC09168-12012	JUNTA	GASKET	GUARNIZIONE	JOINT	1
		CM55321-87J00A	ANODO	ANODE	ANODO	ANODE	1
		REC15410-87J10	FILTRO COMBUSTIBLE	FUEL FILTER	FILTRO COMBUSTIBILE	FILTRE À ESSENCE	1
DF25A DF30A (2015+)	REC17400-94821	REC17400-94L00	KIT BOMBA DE AGUA	WATER PUMP KIT	KIT POMPA ACQUA	KIT POMPE À EAU	1
		REC91490-40030	PIN BLOQUEADOR	COTTER PIN	COPPIGLIA	GOUPILLE	1
		NGKCPR6EA-9	BUJÍA	SPARK PLUG	CANDELE	BOUGIE	3
		REC16510-87J00	FILTRO DE ACEITE	OIL FILTER	FILTRO OLIO	FILTRE A HUILE	1
		CM55321-87J00A	ANODO	ANODE	ANODO	ANODE	5
		REC09280-22019	TÓRICA	O-RING	O-RING	JOINT TORIQUE	1
		REC09168-12017	JUNTA	GASKET	GUARNIZIONE	JOINT	1
		REC59178-97J00	JUNTA DRENAJE COLA	DRAIN PLUG GASKET	GUARNIZIONE DRENAGGIO	JOINT DE VIDANGE D'EMBASE	2
		REC15410-87L00	FILTRO COMBUSTIBLE	FUEL FILTER	FILTRO COMBUSTIBILE	FILTRE À ESSENCE	1
DF40 DF50 (2006-10)	REC17400-87820	REC17400-96403	KIT BOMBA DE AGUA	WATER PUMP KIT	KIT POMPA ACQUA	KIT POMPE À EAU	1
		REC16510-87J00	FILTRO DE ACEITE	OIL FILTER	FILTRO OLIO	FILTRE A HUILE	1
		NGKDCPR6E	BUJÍA	SPARK PLUG	CANDELE	BOUGIE	3
		REC91490-40030	PIN BLOQUEADOR	COTTER PIN	COPPIGLIA	GOUPILLE	1
		REC09168-10022	ARANDELA TAPÓN	CAP, O-RING	RONDELLA TAPPO	JOINT DE VIDANGE	2
		REC09168-12012	JUNTA	GASKET	GUARNIZIONE	JOINT	1
		CM55321-87J00A	ANODO	ANODE	ANODO	ANODE	2
		REC09280-22019	TÓRICA	O-RING	O-RING	JOINT TORIQUE	2
		REC15410-87J30	FILTRO COMBUSTIBLE	FUEL FILTER	FILTRO COMBUSTIBILE	FILTRE À ESSENCE	1
DF40A DF50A DF60A (2010+)	REC17400-88810	REC17400-88L00	KIT BOMBA DE AGUA	WATER PUMP KIT	KIT POMPA ACQUA	KIT POMPE À EAU	1
		REC91490-40030	PIN BLOQUEADOR	COTTER PIN	COPPIGLIA	GOUPILLE	1
		REC16510-87J00	FILTRO DE ACEITE	OIL FILTER	FILTRO OLIO	FILTRE A HUILE	1
		NGKDCPR6E	BUJÍA	SPARK PLUG	CANDELE	BOUGIE	3
		REC09168-12012	JUNTA	GASKET	GUARNIZIONE	JOINT	1
		REC09168-10022	ARANDELA TAPÓN	CAP, O-RING	RONDELLA TAPPO	JOINT DE VIDANGE	2
		CM55321-87J00A	ANODO	ANODE	ANODO	ANODE	3
		REC09280-22019	TÓRICA	O-RING	O-RING	JOINT TORIQUE	2
		REC15410-88L00	FILTRO COMBUSTIBLE	FUEL FILTER	FILTRO COMBUSTIBILE	FILTRE À ESSENCE	1
DF60 DF70 (1997-07)	REC17400-99870	REC17400-87E04	KIT BOMBA DE AGUA	WATER PUMP KIT	KIT POMPA ACQUA	KIT POMPE À EAU	1
		REC16510-87J00	FILTRO DE ACEITE	OIL FILTER	FILTRO OLIO	FILTRE A HUILE	1
		NGKBPR6ES	BUJÍA	SPARK PLUG	CANDELE	BOUGIE	4
		REC91490-40030	PIN BLOQUEADOR	COTTER PIN	COPPIGLIA	GOUPILLE	1
		REC09168-10022	ARANDELA TAPÓN	CAP, O-RING	RONDELLA TAPPO	JOINT DE VIDANGE	2
		REC09168-12012	JUNTA	GASKET	GUARNIZIONE	JOINT	1
		CM55321-87J00A	ANODO	ANODE	ANODO	ANODE	1
		REC15410-87J30	FILTRO COMBUSTIBLE	FUEL FILTER	FILTRO COMBUSTIBILE	FILTRE À ESSENCE	1
DF70A DF80A DF90A (2009+)	REC17400-87810	REC17400-87L01	KIT BOMBA DE AGUA	WATER PUMP KIT	KIT POMPA ACQUA	KIT POMPE À EAU	1
		REC16510-90J00	FILTRO DE ACEITE	OIL FILTER	FILTRO OLIO	FILTRE A HUILE	1
		NGKDCPR6E	BUJÍA	SPARK PLUG	CANDELE	BOUGIE	4
		REC09168-12012	JUNTA	GASKET	GUARNIZIONE	JOINT	1
		REC09168-10034	JUNTA	GASKET	GUARNIZIONE	JOINT	2
		CM55321-87J00A	ANODO	ANODE	ANODO	ANODE	3
		REC91490-40030	PIN BLOQUEADOR	COTTER PIN	COPPIGLIA	GOUPILLE	1
		REC09280-22019	TÓRICA	O-RING	O-RING	JOINT TORIQUE	3
		REC15410-87L00	FILTRO COMBUSTIBLE	FUEL FILTER	FILTRO COMBUSTIBILE	FILTRE À ESSENCE	1
DF100 DF115 (2010-12)	REC17400-92840	REC17400-92J21	KIT BOMBA DE AGUA	WATER PUMP KIT	KIT POMPA ACQUA	KIT POMPE À EAU	1
		REC16510-90J00	FILTRO DE ACEITE	OIL FILTER	FILTRO OLIO	FILTRE A HUILE	1
		NGKBKR6E	BUJÍA	SPARK PLUG	CANDELE	BOUGIE	4
		REC91490-40030	PIN BLOQUEADOR	COTTER PIN	COPPIGLIA	GOUPILLE	1
		REC09168-10022	ARANDELA TAPÓN	CAP, O-RING	RONDELLA TAPPO	JOINT DE VIDANGE	2
		REC09168-12012	JUNTA	GASKET	GUARNIZIONE	JOINT	1
		CM55321-87J00A	ANODO	ANODE	ANODO	ANODE	4
		REC09280-22019	TÓRICA	O-RING	O-RING	JOINT TORIQUE	2
		REC09420-05009	CHAVETA	KEY	CHIAVETTA	CLAVETTE	1
		REC15410-87J30	FILTRO COMBUSTIBLE	FUEL FILTER	FILTRO COMBUSTIBILE	FILTRE À ESSENCE	1

KIT	REF					
DF100A DF115A DF140A (2013+) REC17400-92821 	REC17400-92J21	KIT BOMBA DE AGUA	WATER PUMP KIT	KIT POMPA ACQUA	KIT POMPE À EAU	1
	REC16510-90J00	FILTRO DE ACEITE	OIL FILTER	FILTRO OLIO	FILTRE A HUILE	1
	NGKBKR6E	BUJÍA	SPARK PLUG	CANDELE	BOUGIE	4
	REC91490-40030	PIN BLOQUEADOR	COTTER PIN	COPPIGLIA	GOUPILLE	1
	REC09168-10022	ARANDELA TAPÓN	CAP, O-RING	RONDELLA TAPPO	JOINT DE VIDANGE	2
	REC09168-12012	JUNTA	GASKET	GUARNIZIONE	JOINT	1
	CM55321-87J00A	ANODO	ANODE	ANODO	ANODE	4
	REC09280-22019	TÓRICA	O-RING	O-RING	JOINT TORIQUE	2
	REC09420-05009	CHAVETA	KEY	CHIAVETTA	CLAVETTE	1
	REC15412-92J00	FILTRO COMBUSTIBLE	FUEL FILTER	FILTRO COMBUSTIBILE	FILTRE À ESSENCE	1
DF140 (2010-12) REC17400-92850 	REC17400-92J21	KIT BOMBA DE AGUA	WATER PUMP KIT	KIT POMPA ACQUA	KIT POMPE À EAU	1
	REC16510-90J00	FILTRO DE ACEITE	OIL FILTER	FILTRO OLIO	FILTRE A HUILE	1
	NGKBKR6E	BUJÍA	SPARK PLUG	CANDELE	BOUGIE	4
	REC91490-40030	PIN BLOQUEADOR	COTTER PIN	COPPIGLIA	GOUPILLE	1
	REC09168-10022	ARANDELA TAPÓN	CAP, O-RING	RONDELLA TAPPO	JOINT DE VIDANGE	2
	REC09168-12012	JUNTA	GASKET	GUARNIZIONE	JOINT	1
	CM55321-87J00A	ANODO	ANODE	ANODO	ANODE	4
	REC09280-22019	TÓRICA	O-RING	O-RING	JOINT TORIQUE	2
	REC09420-05009	CHAVETA	KEY	CHIAVETTA	CLAVETTE	1
	REC15410-87J30	FILTRO COMBUSTIBLE	FUEL FILTER	FILTRO COMBUSTIBILE	FILTRE À ESSENCE	1
DF150 DF175 (2006+) REC17400-96821 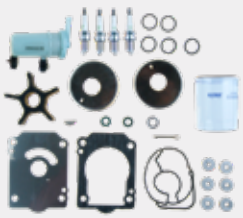	REC17400-96J03	KIT BOMBA DE AGUA	WATER PUMP KIT	KIT POMPA ACQUA	KIT POMPE À EAU	1
	REC16510-96J00	FILTRO DE ACEITE	OIL FILTER	FILTRO OLIO	FILTRE A HUILE	1
	NGKBKR6E	BUJÍA	SPARK PLUG	CANDELE	BOUGIE	4
	REC91490-40030	PIN BLOQUEADOR	COTTER PIN	COPPIGLIA	GOUPILLE	1
	REC09168-10034	JUNTA	GASKET	GUARNIZIONE	JOINT	2
	REC09168-12012	JUNTA	GASKET	GUARNIZIONE	JOINT	1
	CM55321-87J00A	ANODO	ANODE	ANODO	ANODE	6
	REC09280-22019	TÓRICA	O-RING	O-RING	JOINT TORIQUE	5
	REC17413-96J01	CASQUILLO INOX	SLEEVE WATER PUMP	CAPPUCCIO	INSERT DE POMPE À EAU	1
	REC15410-96J00	FILTRO COMBUSTIBLE	FUEL FILTER	FILTRO COMBUSTIBILE	FILTRE À ESSENCE	1
DF200 DF225 DF250 (2011+) REC17400-93851 	REC17400-93J01	KIT BOMBA DE AGUA	WATER PUMP KIT	KIT POMPA ACQUA	KIT POMPE À EAU	1
	REC16510-96J00	FILTRO DE ACEITE	OIL FILTER	FILTRO OLIO	FILTRE A HUILE	1
	NGKBKR6E	BUJÍA	SPARK PLUG	CANDELE	BOUGIE	6
	REC91490-40030	PIN BLOQUEADOR	COTTER PIN	COPPIGLIA	GOUPILLE	1
	REC09168-10034	JUNTA	GASKET	GUARNIZIONE	JOINT	2
	REC09168-12012	JUNTA	GASKET	GUARNIZIONE	JOINT	1
	CM55321-87J00A	ANODO	ANODE	ANODO	ANODE	7
	REC09280-22019	TÓRICA	O-RING	O-RING	JOINT TORIQUE	7
	CM55321-94900A	ANODO	ANODE	ANODO	ANODE	1
	REC15412-93J10	FILTRO COMBUSTIBLE	FUEL FILTER	FILTRO COMBUSTIBILE	FILTRE À ESSENCE	1
DF200A/AP DF150AP DF175AP (2016+) REC17400-96832 	REC17400-96J02	KIT BOMBA DE AGUA	WATER PUMP KIT	KIT POMPA ACQUA	KIT POMPE À EAU	1
	REC16510-96J00	FILTRO DE ACEITE	OIL FILTER	FILTRO OLIO	FILTRE A HUILE	1
	NGKLKR6E	BUJÍA	SPARK PLUG	CANDELE	BOUGIE	4
	REC91490-40030	PIN BLOQUEADOR	COTTER PIN	COPPIGLIA	GOUPILLE	1
	REC09168-10034	JUNTA	GASKET	GUARNIZIONE	JOINT	2
	REC09168-12012	JUNTA	GASKET	GUARNIZIONE	JOINT	1
	REC55321-87J01AL	ANODO	ANODE	ANODO	ANODE	6
	REC09280-22019	TÓRICA	O-RING	O-RING	JOINT TORIQUE	5
	REC17413-96J01	CASQUILLO INOX	SLEEVE WATER PUMP	CAPPUCCIO	INSERT DE POMPE À EAU	1
	REC15412-92J00	FILTRO COMBUSTIBLE	FUEL FILTER	FILTRO COMBUSTIBILE	FILTRE À ESSENCE	1
DF250A DF250S DF300 (A) (2011+) REC17400-98861 	REC17400-98J01	KIT BOMBA DE AGUA	WATER PUMP KIT	KIT POMPA ACQUA	KIT POMPE À EAU	1
	REC16510-96J00	FILTRO DE ACEITE	OIL FILTER	FILTRO OLIO	FILTRE A HUILE	1
	NGKBKR6E	BUJÍA	SPARK PLUG	CANDELE	BOUGIE	6
	REC91490-40030	PIN BLOQUEADOR	COTTER PIN	COPPIGLIA	GOUPILLE	1
	REC09168-10034	JUNTA	GASKET	GUARNIZIONE	JOINT	2
	REC09168-12012	JUNTA	GASKET	GUARNIZIONE	JOINT	1
	CM55321-87J00A	ANODO	ANODE	ANODO	ANODE	8
	REC09280-22019	TÓRICA	O-RING	O-RING	JOINT TORIQUE	7
	CM55321-94900A	ANODO	ANODE	ANODO	ANODE	1
	REC15412-93J10	FILTRO COMBUSTIBLE	FUEL FILTER	FILTRO COMBUSTIBILE	FILTRE À ESSENCE	1

SISTEMA DE ALIMENTACIÓN Y FILTRACIÓN
FUEL & FILTRATION SYSTEM
SISTEMA DI ALIMENTAZIONE E FILTRAZIONE
SYSTÈME D'ALIMENTATION ET DE FILTRATION

BOMBA DE COMBUSTIBLE | FUEL PUMP | POMPA BENZINA | POIRE À CARBURANT

BOMBA DE COMBUSTIBLE

Fabricada con elastómeros termoplásticos inyectados, resistentes al alcohol y rayos UV.s

FUEL PUMP

Premium quality bulb resistence to alcohol as well as UV and ozone.

POMPA BENZINA

Fabbricata con elastomero termoplastico, resistente ai solventi e raggi UV.

POIRE À CARBURANT

Fabriqué avec des élastomères thermo-plastiques injectés, résistant à l'alcool et aux rayons UV.

REF	RO OEM		
GS31187	65770-95541	1/4" = 6 mm	1
GS31090	65770-95504	5/16" = 8 mm	1
GS31095	65770-93J12	3/8" = 9.5 mm	1
GS31090	65770-90J12	5/16" = 8 mm	1

GOLDENSHIP



LÍNEA DE COMBUSTIBLE | FUEL LINE ASSEMBLY | TUBO CARBURANTE | TUYAU CARBURANT

Universal. Manguera resistente al alcohol.

Universal. Alcohol resistant hose.

Universale. Tubo resistente ai solventi.

Universel. Tuyau résistant à l'alcool.

REF		
GS31096	5/16" x 2 m	1
GS31097	3/8" x 2 m	1
GS31099	8 mm x 2 m	1
SIE18-8013	5/16" x 2 m	1
SIE18-8015	3/8" x 2 m	1







SIE18-8013
SIE18-8015

REF		
GS31189	3/8" x 2 m	1

MADE IN THE USA

GOLDENSHIP



new

REF		
GS31183	6 mm x 2 m	1

GOLDENSHIP



MANGUERA DE COMBUSTIBLE | FUEL HOSE | TUBO BENZINA | TUYAU CARBURANT

Manguera «Trident» para líneas de combustible. Con refuerzo termoplástico que le permite excelente flexibilidad y resistencia a los rayos UV. Color gris. Resistente al alcohol. Especialmente indicado para motores fueraborda.
Garantía: 3 años

Marine fuel hose (distribution and vent) for outboards. Fuel resistant thermo-plastic formulation with 2 spiral reinforcement provides excelent bendability and resistance to UV, aging and permeation by all marine fuels (gasoline/petrol and diesel) including alcohol blends.
Warranty: 3 years

Tubo «Trident» per linea combustibile. Con rinforzo termoplastico che gli permette un'eccellente flessibilità e resistenza ai raggi UV. Colore grigio. Resistente ai solventi. Indicato per i motori fuoribordo.
Garanzia: 3 anni

Tuyau «Trident» pour carburant. Avec renfort thermoplastique qui permet une excellente flexibilité et résistance aux rayons UV. Gris. Résistant à l'alcool Convient particulièrement aux moteurs hors-bord.
Garantie: 3 ans

REF	Ø			
TRI305-0566	5/16" = 7,92 mm	15 m	1	SAEJ1527 ISO-8469 B1 CE
TRI305-0386	3/8" = 9,53 mm	15 m	1	



TRIDENT

MADE IN THE USA

CE CERTIFIED

De goma para diesel y gasolina sin plomo. Ideal para fueraborda. Refuerzos texiles internos. Muy flexible. Contenido aromático 50%

Rubber Hose suitable for loading mineral oils, diesel and unloaded fuel

In gomma per diesel e benzina senza piombo. Ideale per motori fuoribordo. Tessuto interno rinforzato. Molto flessibile.

Caoutchouc pour diesel et essence sans plomb. Idéal pour le hors-bord. Renforts textiles internes. Très flexible

CARBUPOMP/10NL

REF	Ø (mm)					
GS35031	6x12	10 bar	50 mm	-25°C ➡80° C	50 m	ISO R1307
GS35032	8x15	10 bar	65 mm		50 m	

ht hoses technology

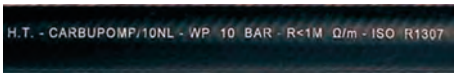

SUZUKI

RECAMBIOS MARINOS

MUELLE TUBO COMBUSTIBLE | SPRING, FUEL PIPE | MOLLA TUBO COMBUSTIBILE | RESSORT, TUYAU DE CARBURANT

new

REF
PAF4-04000030
PAF4-05000010



ABRAZADERA | CLAMP SMALL | FASCETTE | COLLIER

new

REF	
REC650-24351-51	6 mm
REC6E5-24351-51	8 mm



REF	OEM		
REC09401-11425	09401-11425	6-8 mm	1
REC09401-11425BULK	17822-90J00	6-8 mm	25



ADPATADOR LÍNEA DE COMBUSTIBLE | COUPLER | ADATTATORE | RACCORD COUPLEUR

REF	
REC22-8M0001721	Ø 11 mm --> Ø 9 mm



COMPONENTES TANQUE Y CONECTORES | FUEL TANK COMPONENTS & CONNECTORS | COMPONENTI SERBATOIO E CONNETTORI | COMPOSANTS ET CONNECTEURS DU RÉSERVOIR

CONECTOR DE DEPÓSITO | TANK CONNECTOR | ATTACCO SERBATOIO | RACCORDS DE RESERVOIR

Fabricado en latón. | Made in machined brass. | Fabbricato in ottone. | Coude MF 1/4" NPT en laiton.

REF		
GS31068	1/4" NPT	1



GOLDENSHIP

Para conectar dos motores a un sólo depósito, o viceversa. Fabricado en latón. | To connect two motors to a single tank, or vice versa. Made in machined brass | Per collegare due motori a un singolo serbatoio o viceversa. Fabbricato in ottone. | Té en laiton, pour connecter deux moteurs à un même réservoir, ou inversement.

REF		
GS31069	1/4" NPT	1



GOLDENSHIP MADE IN THE USA

new

REF	OEM	COMPATIBLE CON CONECTOR / COMPATIBLE WITH CONNECTOR / COMPATIBILE CON CONNETTORE / COMPATIBLE AVEC CONECTEUR
REC65750-94404	65750-94404 65750-94403 65750-94402 65750-94401	GS31039 GS31038

DT4 --> DT140



new

REF	OEM	COMPATIBLE CON CONECTOR / COMPATIBLE WITH CONNECTOR / COMPATIBILE CON CONNETTORE / COMPATIBLE AVEC CONECTEUR
REC65720-986L0	65720-986L0 65720-986A0 65720-986B0	GS31089

DF25 --> DF140

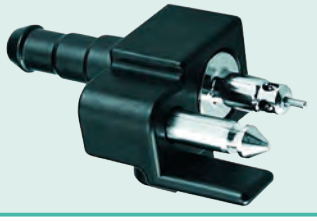

new

REF	OEM
REC65720-98520	65720-98520 65720-98500 65720-98501 65720-98502 65720-98521 65720-985L1

9.9, 15 HP 4 T/Strokes
2 --> 65 HP 2 T/Strokes

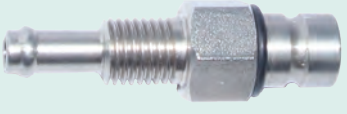

REF	OEM		COMPATIBLE CON CONECTOR COMPATIBLE WITH CONNECTOR COMPATIBILE CON CONNETTORE COMPATIBLE AVEC CONECTEUR
GS31037	65740-99100	1/4" NPT	GS31035

2 --> 60 HP 2 T/Strokes

GOLDENSHIP MADE IN THE USA



REF	OEM		COMPATIBLE CON CONECTOR COMPATIBLE WITH CONNECTOR COMPATIBILE CON CONNETTORE COMPATIBLE AVEC CONECTEUR
GS31038	65720-94411	mm	REC65750-94404

DT75- 140 HP 2T/Strokes
antigüos | old | vecchio | ancien

GOLDENSHIP MADE IN THE USA



REF	OEM		COMPATIBLE CON CONECTOR COMPATIBLE WITH CONNECTOR COMPATIBILE CON CONNETTORE COMPATIBLE AVEC CONECTEUR
GS31039	65720-94403	1/4" NPT	REC65750-94404

DT4--> 65 HP 2T/Strokes
antigüos | old | vecchio | ancien

GOLDENSHIP MADE IN THE USA



REF	OEM		COMPATIBLE CON CONECTOR COMPATIBLE WITH CONNECTOR COMPATIBILE CON CONNETTORE COMPATIBLE AVEC CONECTEUR
GS31070	65740-95D00	1/4" NPT	GS31072

GOLDENSHIP MADE IN THE USA



REF	OEM		COMPATIBLE CON CONECTOR COMPATIBLE WITH CONNECTOR COMPATIBILE CON CONNETTORE COMPATIBLE AVEC CONECTEUR
GS31035	65750-98505	5/16"	GS31037
GS31036	65750-98505	3/8"	GS31037

-60HP 2 T/Strokes

Conector pequeño.
Little connector.
Connettore piccolo.
Conecteur petit.

GOLDENSHIP MADE IN THE USA



REF	OEM		COMPATIBLE CON CONECTOR COMPATIBLE WITH CONNECTOR COMPATIBILE CON CONNETTORE COMPATIBLE AVEC CONECTEUR
GS31089	65750-89J11	3/8"	REC65720-986L0

DF4--> DF140 HP 4 T/Strokes

GOLDENSHIP MADE IN THE USA



REF	OEM		COMPATIBLE CON CONECTOR COMPATIBLE WITH CONNECTOR COMPATIBILE CON CONNETTORE COMPATIBLE AVEC CONECTEUR
GS31071	65750-95500	5/16"	GS31070
GS31072	65750-95500	3/8"	GS31070

60HP+ 2 T/Strokes

Conector grande.
Big connector.
Connettore grande.
Conecteur grand.

GOLDENSHIP MADE IN THE USA



REF		
GS31092	8 mm	1

Conector doble.
Double connector.
Connettore doppio.
Double connecteur..

GOLDENSHIP



PASAMAMPAROS

Para atravesar mamparos de hasta 12 mm. Fabricado en latón.

REF		
GS31064	3/8"	1

THRU HULL

For bulkhead up to 12 mm. Made in machined brass.



PASSASCAFO

Per attraversare paratie fino a 12 mm. Fabbricato in ottone.

PASSE-CLOISON

Pour traverser des cloisons jusqu'à 12 mm. Fait en laiton.

GOLDENSHIP MADE IN THE USA

FILTRO DE COMBUSTIBLE Y ELEMENTOS

FUEL FILTERS AND ELEMENTS

FILTRI BENZINA E RACCORDI

FILTRE À ESSENCE ET CARTOUCHE DE RECHANGE

BRACKET

Con 2 tapones de bronce y 2 tubos de extensión. (2 entradas y 2 salidas).

BRACKET

With 2 brass plugs and 2 extension tubes. (2 inputs & 2 outputs).

SUPPORTO

Con 2 tappi di bronzo e 2 tubi di estensione. (2 ingressi entrata carburante e 2 uscite carburante).

TÊTE DE FILTRE À ESSENCE

Avec 2 bouchons en bronze et 2 tubes d'extension. (2 entrées et 2 sorties).

REF		
REC25000	1/4"	AL
REC25010	1/4"	INOX /SS AISI316
REC25020	3/8"	AL
REC25030	3/8"	INOX /SS AISI316
RECOBBRACKET	1/4"	Plástico | Plastic Plastica | Plastique



REC25000 - REC25020 | REC25010 - REC25030 | RECOBBRACKET

FILTRO COMBUSTIBLE SEPARADOR DE AGUA

WATER SEPARATING FUEL FILTER

FILTRO SEPARATORE ACQUA-BENZINA

FILTRE SEPARATEUR EAU-ESSENCE

REF	MICRON	
REC24942	10	$4^{7/16}$" = 11 cm
REC35-802893Q01	10	$3^{3/4}$"
REC855686	28	$4^{7/16}$"
REC35-802893Q	25	$3^{3/4}$"
RACPFF5510	10	$4^{7/16}$"



RACPFF5510 | REC24942 | REC35-802893Q01 | REC855686 | REC35-802893Q

Filtro original.

OEM filter.

Filtro benzina originale.

Filtre à essence d'origine

REF	MICRON	
RM35-802893Q	10	$3^{3/4}$"



FILTRO CON BRACKET

Con 2 tapones de bronce y 1 tubo de extensión.

OEM FILTER WITH BRACKET

With 2 brass plugs & 1 extension tube.

FILTRO BENZINA CON SUPPORTO

Con 2 tappi di bronzo e 1 tubo di estensione.

FILTRE À ESSENCE AVEC SUPPORT

avec 2 bouchons en bronze et 1 tube d'extension

REF	MICRON			BRACKET
REC24950	25	1/4"	50 GPH	AL
REC24952	10	1/4"	50 GPH	AL



FILTRO DECANTADOR DE COMBUSTIBLE COMPLETO CON VASO TRASPARENTE

COMPLET FUEL FILTER WITH TRANSPARENT BOWL

FILTRO DI DECANTAZIONE BENZINA COMPLETO CON VASCHETTA TRASPARENTE

FILTRE DÉCANTEUR ESSENCE AVEC BOL TRANSPARENT

REF		BRACKET
RAC320R-RAC-01		AL
RAC320R-RAC-03	RACS3213 LENS3213	Plástico Plastic Plastica Plastique



REF			BRACKET
RECOBFILALU			AL
RECOBFILTER	RECOBELEMENT LENS3213	150 l/h	Plástico Plastic Plastica Plastique



SUZUKI

RECAMBIOS MARINOS

FILTRO CON BOMBA CEBADORA / FILTER WITH PRIMMING PUMP / FILTRO CON POMPETTA PER RIEMPIRE / FILTRE À ESSENCE AVEC POMPE D'AMORCAGE

RACOR

REF	OEM		OEM	MICRON			
RAC490R-RAC-01	99105-20005-ASY	RACS3227 LENS3227	99105-20005	10	340 l/h	3/8" NPTF	150 hp





FILTRO DECANTADOR GASOLINA / COMPLETE FUEL FILTER / FILTRO DECANTATORE BENZINA / FILTRE DÉCANTEUR ESSENCE

Filtro de combustible con braket. / Complete fuel filter with braket. / Filtro combustibile con supporto. / Filtre à carburant avec support.

RACOR

REF		
RAC23299-10	RAC23289-10	130 HP (4 T/ Strokes)





RECmar

REF	OEM		R.O. / OEM	MICRON		
REC90794-46866	65900-98J00	REC90794-46868	65910-98J00	10	117 l/h	175 hp







LLAVE PARA FILTRO / FILTER KEY / CHIAVE DA FILTRO / CLÉ À FILTRE

REF
RECYS-225-15



new

REF	MICRON	
PAF40-0701000EI	10	70 hp





RÁCORES · RACORS · RACCORDI · RACCORDS

REF			
GS31065	1/4" NPT	3/8" = 9.5 mm	1
GS31166	1/4" NPT	5/16" = 7.9 mm	2
GS31155	3/8" NPT	3/8" = 9.5 mm	2
GS31156	3/8" NPT	5/16" = 7.9 mm	2
GS31157	3/8" NPT	1/4" = 6.4 mm	2



REF			
GS31066	1/4" NPT	5/16" = 7.9 mm	2
GS31067	1/4" NPT	3/8" = 9.5 mm	2

GOLDENSHIP



LLAVES PARA FILTRO · FILTER KEY · CHIAVE DA FILTRO · CLÉ À FILTRE

REF	OEM
RACRK22628	99105-20003

RACOR



REF	
REC70720	65 - 110 mm

RECmar

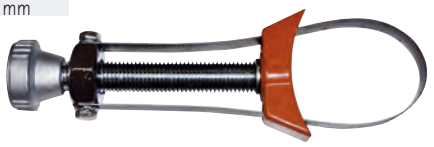

FILTRO COMBUSTIBLE PARA MONTAJE EN LÍNEA · IN-LINE FUEL FILTER · FILTRO BENZINA PER MONTARE IN LINEA · FILTRE A ESSENCE EN LIGNE

REF				
GS31001	50 l/h	6-8 mm	plástico plastic plastica plastique	1
GS31002	150 l/h	8-10 mm		1

GOLDENSHIP



GS31001



GS31002

REF			
GS30435	6, 8, 10 mm	metal + cristal metal + crystal metallo + cristallo métal + verre	1

GOLDENSHIP



REF	OEM			
REC40145	40145	1/4"	1/4"	plástico plastic plastica plastique
REC40155	40155	5/16"	5/16"	
REC40165	40165	3/8"	3/8"	
REC40135	40135	5/16"	3/8"	



REF	OEM
REC65L-24563-00	15412-93J00

DF200, DF225, DF250 (2004-11)
DF300T-Z (2007-11)



REF	OEM
REC15410-87L00	15410-87L00

DF9.9B, DF15A, DF20A (2013)
DF25A, DF30A (2015)
DF90A, DF80A, DF90A (2009+)



REF	OEM
REC15410-87J30	15410-87J30

DF20R, DF25, DF25R V2 (2006-11)
DF40, DF50X-K10 (1999-10)
DF60, DF70W-K9 (1998-09)
DF90, DF100, DF115 K1-K11 (2001-11)
DF140 (2002-12)



REF	OEM
REC15410-96J00	15410-96J00

DF150T-Z, DF175T-Z (2006-13)
DF150T (G)Z, DF175T (G)Z (2014)



REF	OEM
REC15410-87J10	15410-87J10

DF25, DF30Y-K6 (2000-06)
DF40, DF50X-K10 (1999-10)
DF60, DF70W-K9 (1998-09)
DF90, DF100, DF115K1-K11 (2001-11)
DF140 (2002-11)



REF	OEM	
PAF15-07080000	15410-94400	15 - 60 hp

DT9.9K, DT15K-G-Y (1986-00)
DT25C, DT30C-K-Y (1989-00)
DT20, DT25, DT30G-Y (1986-00)
DT55, DT65J-X (1988-99)
DT40C-W-G-X (1986-99)
DT5, DT6, DT8G-Y (1986-00)



REF	OEM
REC15410-98500	15410-98500

DF4, DF5, DF6 (2002-14)
DF8A, DFAR, DF9.9A, DF9.9AR (2010+)
DF9.9, DF15T-K3 (1996-03)
DF9.9, DF15 (R) (2004-12)
DF40, DF50X-K10 (1999-10)
DF60, DF70W-K9 (1998-09)
DF150T-Z, DF175T-Z (2006-11)



new

REF	OEM
REC15412-92J00	15412-92J00

DF100A, DF115, DF140A (2013+)
DF150, DF175, DF200 A/AP/AT (2015+)
DF70A, DF80A, DF0A, DF100B (2018+)



new

REF	OEM
REC90794-46868	65910-98J00

DF8 --> DF300
DT9.9 40HP



new

REF	OEM
REC69J-24501-10	15643-93J00

DF200, DF225, DF250 (2004+)
DF250AP, DF300AP (2013+)
DF300T/Z (2007-11)
DF300AP (2012)



new

REF	OEM
REC15410-88L00	15410-88L00

DF40A, DF50A, DF60A (2010+)



new

REF	OEM
REC15412-93J10	15412-93J10

DF200, DF225, DF250 (2004+)
DF250AP, DF300AP (2015+)
DF300T/F (2004-11)
DF350A, DF325A (2018+)



new

REF	OEM
REC15410-93J00	15410-93J00

DF200, DF225, DF250 (2004-11)
DF300T/Z (2007-11)



new

REF	OEM
REC16910-GB2-005	15410-94350

DT40C-W-G-X (1986-99)
DT40WK1-K4 (2001-04)
DT5Y (1998-02)
DT9.9, DT15K1-K4 (2001-04)
DT9.9K, DT15KG-Y (1986-00)



new

FILTRO COMBUSTIBLE ALTA PRESIÓN / HIGH PRESSURE FUEL FILTER / FILTRO BENZINA ALTA PRESSIONE / FILTRE À ESSENCE HAUTE PRESION

REF	OEM
REC15410-87J00	15410-87J10

DF40, DF50X-K10 (1999-10)



new

REF	OEM
REC15440-96J00	15440-96J00

DF150T/Z, DF175T/Z (2006-11)



new

REF	OEM
REC15440-87L10	15440-87L10

DF70A, DF80A, DF90A (2009-12)



new

REF	OEM
REC15440-90J00	15440-90J00

DF90, DF100, DF115 (2002-11)
DF140 (2002-12)



new

REF	OEM
REC15440-96J01	15440-96J01

DF150, DF175, DF200 A/P (2015+)
DF150, DF175, DF200 G/Z/AT (2006+)



new

REF	OEM
REC15440-93J00	15440-93J00

DF200, DF225, DF250 (2004-18)
DF250AP, DF300AP (2012+)
DF300T/Z (2007-11)



new

REF	OEM
REC15440-99E01	15440-99E01 15440-99E00

DF60, DF70W-K9 (1998-09)



FILTRO DE ACEITE OIL FILTER FILTRO OLIO FILTRE À HUILE

REF	OEM
REC16510-05240	16510-45H10 16510-05240

DF8A-AR, DF9.9A-AR (2010+)
DF9.9, DF15T-K3 (1996-03)
DF9.9, DF115(R) (2004-11)
DF9.9B, DF15A, DF20A (2013)
DF15 (2012)



REF	OEM
REC09280-54001	09280-54001 09280-56001

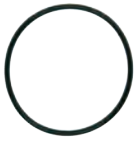

REF	OEM
REC16510-90J00	16510-90J00 16510-61A30 16510-61A31 16510-61A01 16510-61A20-MHL 16510-61A21-MHL

DF70A, DF80A, DF90A (2009-11)
DF90, DF100, DF115 K1-K11 (2001-11)
DF115WT, DF140WT-K3 (2001-11)



REF	OEM
REC16510-87J00	16510-87J00 16510-87JL0

DF20R, DF25-R-V2 (2006-11)
DF25, DF30Y-K6 (2000-06)
DF40, DF50X-K10 (1999-10)
DF40A, DF50A, DF60A (2010+)
DF60, DF70W-K9 (1998-09)



REF	OEM
REC16510-82703	16510-82703 16510-92J00 16510-81420

DF140 (2002-12)
DF115WT, DF140WT-K3 (2003)



REF	OEM
REC16510-96J00	16510-96J00
REC16510-93J00	16510-96J10

DF150T-Z, DF175T-Z (G) (2006+)
DF150AP, DF175AP, DF200AP (2018+)
DF150AT, DF175AT, DF200AT (2019)
DF200, DF225, DF250 (2004+)
DF200A (2015+)
DF300AP (2012+)
DF300T-Z (2007-11)
DF350A, DF325A (2018+)

REC16510-93J00 CAMBIA | CHANGE | CAMBIA | CHANGE --> REC16510-96J00



GUÍA FILTROS DE ACEITE OIL FILTER GUIDE GUIDA FILTRO OLIO GUIDE FILTRE À HUILE

		REF
DF9.9, 9.9TH, 9.9A, 9.9B, 15, 15A, 20A	1996+	REC16510-05240
DF25, 25V Twin, 25A, 30, 30A		REC16510-87J00
DF40, 40A, 50, 50A, 60, 60A, 70		REC16510-87J00
DF70A, 90A	2009+	REC16510-90J00
DF90, 115		REC16510-90J00

	REF
DF115A, DF140A	REC16510-90J00
DF140	REC16510-82703
DF150, 175, 200A	REC16510-96J00 REC16510-93J00
DF200, 225, 250, 300, 350	REC16510-96J00 REC16510-93J00

JUNTA TAPÓN DE CÁRTER OIL DRAIN PLUG GASKET GUARNIZIONE, TAPO COPPA L'OLIO JOINT DE VIDANGE

new

REF	OEM
REC09168-12012	09168-12012

DF25 --> DF350



new

REF	OEM
REC09168-12017	09168-12017

DF4 --> DF30



ACEITE OIL OLIO HUILES

REF				
REC2TU6		1 L	6	2 STROKES
REC2TU3		5 L	3	TC-W3
REC5W40U6		1 L	6	SAE 5W40
REC5W40U3		5 L	3	
REC10W30U6		1 L	6	SAE 10W30
REC10W30U3		5 L	3	
REC10W40U6	990C0-01E30-GLN 990C0-10W40-1GL	1 L	6	SAE 10W40
REC10W40U3	990C0-10W40-GAL 990C0-10W40-GLN	5 L	3	
REC25W40U3		5 L	3	SAE 25W40
REC80W90U3	990A0-01E81-01Q	5 L	3	SAE 80W90
REC80W90U6		1 L	6	



REF			
RM92-858026QB1U6	1 L	6	2 STROKES
RM92-858027QB1U3	3,8 L	3	
RM92-8M0086220U6	1 L	6	SAE 10W30
RM92-8M0086221U3	4 L	3	



RM92-858026QB1U6 RM92-858027QB1U3



RM92-8M0086220U6 RM92-8M0086221U3

BOMBA DE COMBUSTIBLE FUEL PUMP POMPA BENZINA POMPE À ESSENCE

BOMBA DE COMBUSTIBLE MECÁNICA FUEL PUMP MECHANICAL POMPA BENZINA MECCANICA POMPE À ESSENCE MECANIQUE

new

REF	OEM	2T STROKES	4T STROKES
PAF4-04090000	15100-91J00 15100-91J01 15100-91J02		✔

DF4, DF5, DF6 (2002+)



new

REF	OEM	2T STROKES	4T STROKES
REC692-24410-00	15100-94311 15100-94301 15100-94303 15100-94310	✔	

DT20, DT25, DT30G-Y (1986-00)
DT25C, T30C K-Y (1989-00)
DT40C-W G-X (1986-99)
DT55, DT65 J-X (1988-99)
DT8, D9.9C J-V (1988-99)
DT25, DT30 K1-K2 (2001-02)
DT40W K1-K4 (2001-04)



BOMBA DE COMBUSTIBLE ELÉCTRICA FUEL PUMP ELECTRIC POMPA BENZINA ELETTRICA POMPE À ESSENCE ÉLECTRIQUE

REF	OEM		2T STROKES	4T STROKES
REC63P-13907-03	15200-90J00 15200-92J00 15200-93J01	REC63P-14984-00		✔

DF70A, DF80A, DF90A (2009-12)
DF90, DF100, DF115 (2001-11)
DF140 (2002-12)
DF100A, DF115A (2013)
DF100A, DF115A, DF140A (2014+)
DF140A (2013)
DF7A, DF80A, DF90A (2014+)
DF200, DF225, DF250 (2004+)

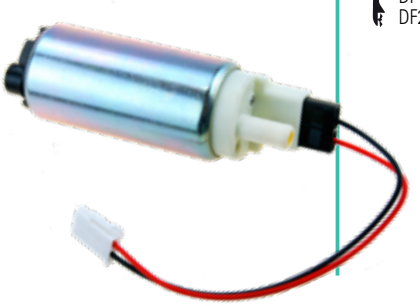

REF	OEM	2T STROKES	4T STROKES
REC15200-96J00	15200-96J00		

DF150, DF175T/Z (G) (2014)
DF150, DF175T/Z (2006-13)
DF200A (2015)



BOMBA DE COMBUSTIBLE ALTA PRESIÓN | HIGH PRESSURE FUEL PUMP | POMPA BENZINA ALTA PRESSIONE | POMPE À ESSENCE HAUTE PRESSION

new

REF	OEM
REC15200-82J20	15200-92J00 15200-92J20

DF70A, DF80A, DF90A, DF100B (2014+)
DF100A, DF115A, DF140A (BG, BZG) (2013+)



KITS MEMBRANAS Y JUNTAS | DIAPHRAGMS & GASKETS SETS | KIT MEMBRANA E GUARNIZIONI | KIT MEMBRANES ET JOINTS

REF	OEM
REC15170-93911	15170-93920

DT9.9K, DT15K-G-Y (1986-00)
DT9.9, DT15K1-K4 (2001-04)
DT8, DT9.9C-J-V (1988-97)
DT15C (1989-97)



REF	OEM
REC15170-98110	15170-98110

DT4, J4, DT5Y (1988-00)
DT4 K1 (2001)
DT5Y (1998-02)
DT5, DT6, DT8G-Y (1986-00)
DT6, DT8Y-K2 (2000-02)



REF	OEM
REC15170-94320	15170-94320

DT20, DT25, DT30G-Y (1986-00)
DT25, DT30 K1-K2 (2001-02)
DT25C, DT30C K-Y (1989-00)
DT40C-W-G-X (1986-99)
DT40W-K1-K4 (2001-04)
DT55, DT65J-X (1988-99)



REF	OEM
REC15170-91J00	15170-91J00

DF4, DF5, DF6 (2002-11)



REF	OEM
REC15170-94J00	15170-94J00

DF8A, DF8AR, DF9.9A, DF9.9AR (2010-11)
DF9.9, DF15 (R) (2004-11)



REF	OEM
REC15170-99E00	15170-99E00

DF9.9, DF15R-K3 (1996-03)
DF25, DF30Y K6 (2000-06)
DF40, DF50Z-K10 (1999-10)
DF60, DF70W-K9 (1998-09)



JUNTAS VST | VST GASKETS | GUARNIZIONE VST | JOINTS VST

new

REF	OEM
REC15626-99E00	15626-99E00 15643-99E00

DF40, DF50 X-K10 (1999-10)
DF60, DF70 W-K9 (1998-09)



new

REF	OEM
REC15626-90J00	15626-90J00

DF70A, DF80A, DF90A (2009-12)
DF90, DF100, DF115 (2001-11)
DF140 (2002-12)
14002F
14002Z

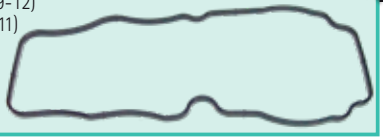

INYECTORES INJEKTOR INIETTORE INJECTEURS

GUÍA INYECTORES Y SENSORES — GUIDE INJECTORS & SENDERS — GUIDA INIETTORI E SENSORI — GUIDE INJECTEURS ET SONDES

			MAP	IAC VALVE
DF9.9B	2013+	REC15710-89L00	REC18590-58M00	
DF15A	2013+	REC15710-89L00	REC18590-58M00	
DF20A	2013+	REC15710-89L00	REC18590-58M00	
DF25A	2015+	REC15710-82M00	REC18590-58M00	
DF30A	2015+	REC15710-82M00	REC18590-58M00	
DF40	1999-10	REC15710-87J00		
DF40A	2010+	REC15710-85K00		REC18137-88L01
DF50	1999-01	REC15710-87J00		
DF50A	2010+	REC15710-85K00		REC18137-88L01
DF60 (S/N 971543-)	1998-09	REC15710-99E00		
DF60 (S/N 971544+)	1998-09	REC15710-66D00		
DF60A	2010+	REC15710-85K00		REC18137-88L01
DF70 (S/N 971543-)	1998-09	REC15710-99E00		
DF70 (S/N 971544+)	1998-09	REC15710-66D00		
DF70A	2009-11	REC15710-87L00	REC18590-68H00	REC18137-87L01
DF70A	2012+	REC15710-82K50	REC18590-68H00	REC18137-87L01
DF80A	2009-11	REC15710-87L00	REC18590-68H00	REC18137-87L01
DF80A	2012+	REC15710-82K50	REC18590-68H00	REC18137-87L01
DF90	2001-07	REC15710-65D00	REC18590-68H00	
DF90A	2009-11	REC15710-87L00	REC18590-68H00	REC18137-87L01
DF90A	2012+	REC15710-82K50	REC18590-68H00	REC18137-87L01
DF100	2001-07	REC15710-65D00	REC18590-68H00	
DF115	2001-07	REC15710-65D00	REC18590-68H00	
DF90	2008-11	REC15710-65D00	REC18590-72F21	
DF100	2008-11	REC15710-65D00	REC18590-72F21	
DF100A	2013+	REC15710-82K50	REC18590-68H00	
DF115WT	2003-07	REC15710-65D00	REC18590-72F21	

			MAP	IAC VALVE
DF115WT	2008+	REC15710-65D00	REC18590-68H00	
DF115	2008-11	REC15710-65D00	REC18590-72F21	
DF115A	2013+	REC15710-82K50	REC18590-68H00	
DF140A	2002-12	REC15710-65D00	REC18590-68H00	
DF140WT K3	2003-07	REC15710-65D00	REC18590-72F21	
DF140WT K3	2008+	REC15710-65D00	REC18590-68H00	
DF140A	2013+	REC15710-82K50	REC18590-68H00	
DF150T/Z	2006-12	REC15710-96J00	REC18590-68H00	REC18137-52D00
DF150 T/Z (G)	2013+	REC15710-96J00	REC18590-68H00	REC18137-93J00
DF150AP	2017+	REC15710-96J00	REC18590-68H00	
DF150AT	2019	REC15710-96J00	REC18590-68H00	REC18137-93J00
DF175T/Z	2006-12	REC15710-96J00	REC18590-68H00	REC18137-52D00
DF175 T/Z (G)	2013+	REC15710-96J00	REC18590-68H00	REC18137-93J00
DF175AP	2017+	REC15710-96J00	REC18590-68H00	
DF175AT	2019	REC15710-96J00	REC18590-68H00	REC18137-93J00
DF200	2004-12	REC15710-96J00	REC18590-68H00	REC18137-52D00
DF200	2014+	REC15710-93J00	REC18590-68H00	REC18137-93J00
DF200A	2015-17	REC15710-96J00	REC18590-68H00	REC18137-93J00
DF200AP	2015+	REC15710-96J00	REC18590-68H00	
DF200AT/AZ	2018+	REC15710-96J00	REC18590-68H00	REC18137-93J00
DF225	2004-12	REC15710-96J00	REC18590-68H00	REC18137-52D00
DF225	2014+	REC15710-93J00	REC18590-68H00	REC18137-93J00
DF250AP	2013-18	REC15710-96J00	REC18590-68H00	
DF250	2004-12	REC15710-96J00	REC18590-68H00	REC18137-52D00
DF250	2014+	REC15710-93J00	REC18590-68H00	REC18137-93J00
DF300T/Z	2007-11	REC15710-96J00	REC18590-68H00	
DF300AP	2012-18	REC15710-96J00	REC18590-68H00	
DF325A	2018+		REC18590-68H00	
DF350A	2018+		REC18590-68H00	

INYECTOR — INJEKTOR — INIETTORE — INJECTEUR

new

REF	OEM
REC15710-66D00	15710-66D00



new

REF	OEM
REC15710-87L00	15710-87L00

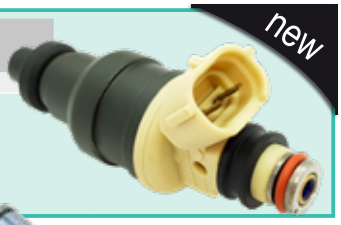

new

REF	OEM
REC15710-65D00	15710-65D00



new

REF	OEM
REC15710-89L00	15710-89L00 15710-50M00



new

REF	OEM
REC15710-87J00	15710-87J00



new

REF	OEM
REC15710-82M00	15710-82M00



new

REF	OEM
REC15710-99E00	15710-99E00

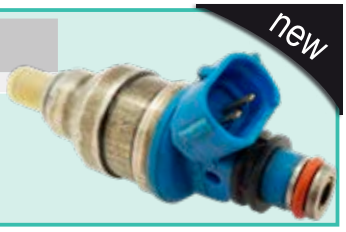

new

REF	OEM
REC15710-85K00	15710-85K00



REF	OEM
REC15710-96J00	15710-96J00

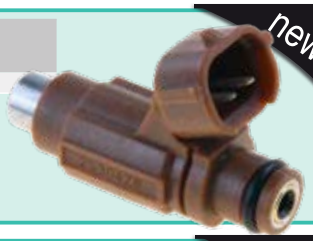

REF	OEM
REC15710-82K50	15710-82K50



REF	OEM
REC15710-93J00	15710-93J00



P. 37

REF
STA93008
STA93016



P. 38

REF
GE22207



CARBURADOR CARBURATOR CARBURATORE CARBURATEUR

CARBURADOR COMPLETO FULL CARBURATOR CARBURATORE COMPLETO CARBURATEUR COMPLET

REF	OEM
REC13200-91J70	13200-91J70

DF4, DF5, DF6 (2002-11)



REF	OEM
REC13200-91D21	13200-91D21 13200-91D20

DT9.9, DT15 K1-K4 (2001-04)
DT9.9K, DT15KG-Y (1986-00)

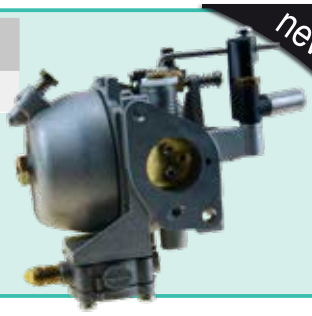

KITS CARBURADORES CARBURETOR KITS KIT CARBURATORI KIT CARBURATEUR

REF	OEM
REC13910-87D00	13910-87D00

V6 MODELS (2T/STROKE)



REF	OEM
REC13910-94701	13910-94701

DT55
DT75
DT115



REF	OEM
REC13910-94400	13910-94400

DT40
DT65
DT85
DT140



REF	OEM
REC13910-89J01	13910-89J01

DF25 (EXC V-TWIN)

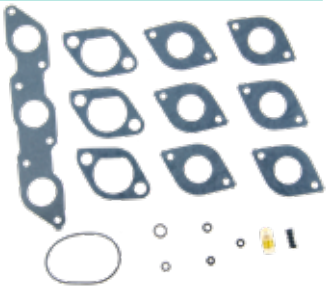

BOYAS FLOATS GALLEGGIANTE FLOTTEUR DE CARBURATEUR

REF	OEM
REC13250-95D01	13250-95D01

DF9.9, DF15 T-K3 (1996-03)
DF9.9, DF15(R) (2004-11)
DT25C, DT30C K-Y (1989-00)



P. 37

REF
GEGC15



SISTEMA ELÉCTRICO
ELECTRIC SYSTEM
SISTEMA ELETTRICO
SYSTÈME ÉLECTRIQUE

SENSORES — SENSORS — SENSORE — CAPTEURS

SENSOR MAP — MAP SENSOR — SENSORE MAP — CAPTEUR MAP

REF	OEM
REC18590-68H00	18590-68H00



REF	OEM
REC18590-58M00	18590-58M00



REF	OEM
REC18590-72F21	18590-72F21



P. 452
Guía inyectores y sensores
Guide injectors et senders
Guida iniettori e sensori
Guide injecteurs et sondes

SENSOR IAC — IAC SENSOR — SENSORE IAC — CAPTEUR IAC

REF	OEM
REC18137-93J00	18137-93J00
REC18137-52D00	18137-52D00
REC18137-88L01	18137-88L01
REC18137-87L01	18137-87L01



REF	OEM
REC13650-52G00	13650-52G00

DF9.9 --> DF350



REF	OEM
REC13650-56B00	13650-56B00

DF60, DF70W-K9 (1998-09)



SENSOR CMP — CMP SENSOR — SENSORE CMP — CAPTEUR CMP

REF	OEM
REC33220-76G02	33220-76G00 33220-76G01 33220-76G02

DF40, DF50X-K10 (1999-10)
DF90, DF100, DF115 (2001-11)
DF140 (2002-12)
DF115, DF140WT (2003)



REF	OEM
REC33220-58J20	33220-58J20

DF150, DF175 (G)Z/T (2014)
DF150, DF175T/Z (2006-13)
DF40A, DF50A, DF60A (2009-12)
DF70A, DF80A, DF90A (2012)



BOBINAS COILS BOBINE BOBINES

BOBINA COIL BOBINA BOBINE

REF	OEM
REC33410-94400-000	33410-94400-000 33410-93E10

DF9.9, DF15T -K3 (1996-03)
DF9.9, DF15(R)' (2004-10)
DT40C-W-G-X (1986-99)
DT40W-K1-K4 (2001-04)



REF	OEM
REC32140-94400	32140-94400

DT40C-WG-X (1986-99)
DT40W K1-K4 (2001-04)

new

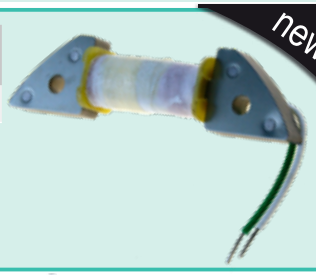

REF	OEM
REC32900-96340	32900-96340

DT20, DT25, DT30G-Y (1986-00)



REF	OEM
REC32140-96310	32140-96310

DT20, DT25, DT30G-Y (1986-00)
DT25, DT30 K1-K2 (2001-02)

new



REF	OEM
REC32900-93903	32900-93903 32900-93902

DT9.9K, DT15G-Y (1986-00)



REF	OEM
REC32140-93900	32140-93900

DT9.9, DT15K1-K4 (2001-04)
DT9.9K, DT15K-G-Y (1986-00)



REF	OEM
REC33410-93J00	33410-93J00

DF150/175T,Z (2006-18)
DF200/225/250 (2004+)
DF250AP/300AP (2012+)
DF300T,Z (2007-11)

new

REF	OEM
REC33410-96L00	33410-96L00

DF150/175/200AT,AZ (2020+)
DF150AP/175AP/200AP (2017+)
DF150AT/175AT/200AT (2019+)
DF200A, AP (2015-17)
DF200AT, AZ (2018)

new

REGULADOR-BOBINA REGULATOR-COIL REGOLATORE-BOBINA REGULATEUR-BOBINE

REF	OEM
REC32900-94480	32900-94401 32900-94421 32900-94480

DT40C-W-X-G (1986-99)



BUJÍAS SPARK CANDELE BOUGIES

4T STROKES		REF NGK	RO / OEM
DF2.5, DF6		NGKCR6HSA	09482-00406
DF4, DF6	2003-10	NGKBPR6ES	09482-00299
DF4, DF6	2011+	NGKCPR6EA-9	09482-00L04
DF9.9A		NGKCR6E	09482-00528
DF9.9, DF15	2004-	NGKDCPR6E	09482-00446
DF9.9, DF15	2004-10	NGKBKR6E	09482-00427
DF9.9, DF15	2010+	NGKCPR6EA-9	09482-00L04
DF25A, DF30A		NGKDCPR6E	09482-00446
DF25 V-TWIN		NGKBKR6E	09482-00427
DF40, DF50		NGKDCPR6E	09482-00446
DF60, DF70		NGKBPR6ES	09482-00299

4T STROKES	REF NGK	RO / OEM
DF40A, DF50A, DF60A	NGKDCPR6E	09482-00446
DF70A, DF90A	NGKDCPR6E	09482-00446
DF90, DF115, DF140	NGKBKR6E	09482-00427
DF150, DF175	NGKBKR6E	09482-00427
DF200A, DF200AP	NGKLKR6E	09482-00649
DF200, DF225, DF250	NGKBKR6E	09482-00427
DF200SS	NGKBKR6E	09482-00427
DF300	NGKBKR6E	09482-00427
DF300B, DF350A, DF325A	NGKILZKR7D8	09482-00642



2T STROKES		REF NGK	
DT2	1986-90	NGKBR4HS	
DT2	1991-99	NGKBR5HS	
DT2.2	1992	NGKBR5HS	
DT4	1988-92	NGKBP5HS	
DT4	1993-01	NGKBPR5HS	
DT4,5		NGKBR6HS	
DT4L/S	1994	NGKBPR5HS	
DT4L/S	-1993	NGKBP5HS	
DT5	1986-92	NGKBP6HS	
DT5	1993-94	NGKBPR6HS	
DT5	1995-00	NGKBR6HS	
DT5W	1986-92	NGKBR6HS	
DT5Y	1998-01	NGKBPR7HS-10	
DT6	1986-92	NGKB6HS-10	
DT6	1993-02	NGKBR6HS	
DT6	-1985	NGKB6HS	
DT6	1995-99	NGKBR6HS-10	
DT6S/5PS	-1992	NGKB6HS	
DT7.5		NGKBR6HS	
DT8	1986-02	NGKBPR6HS	
DT8C	1988-97	NGKBR6HS-10	
DT9		NGKB6HS-10	
DT9.9	1986-99	NGKBR7HS-10	
DT9.9	1977-78	NGKB7HS	
DT9.9	1879-84	NGKBR6HS	
DT9.9	1976	NGKB6HS	
DT9.9C	1988-97	NGKBR6HS-10	
DT9.9E	1982	NGKB6HS	
DT9.9E	1984	NGKB7HS	
DT9.9E	1983	NGKBR7HS-10	
DT9.9K	1985-86	NGKB6HS	
DT9.9K	-1985	NGKBR6HS	
DT9.9K	1986-90	NGKB6HS	
DT9.9P	-1983	NGKBPR6HS	
DT15	1986-02	NGKBR7HS-10	
DT15C	1989-97	NGKBR7HS-10	
DT15K	-1985	NGKBR6HS	
DT15K	1986	NGKB6HS	
DT20	1997-00	NGKBR7HS-10	
DT20/P	-1985	NGKBR7HS	
DT20/P	1986	NGKBR7HS-10	
DT20K	-1985	NGKBR7HS-10	
DT20K	1986-87	NGKB7HS-10	
DT25	-1985	NGKBR7HS	
DT25	2000-01	NGKBR7HS-10	
DT25C	1989-97	NGKBR7HS-10	
DT25E	1983-85	NGKBPR7HS-10	
DT25E	-1982	NGKB7HS	
DT25E	1986	NGKBR7HS-10	
DT25K	1986	NGKBR7HS-10	
DT28/P/E		NGKB7HS	
DT30	1986	NGKBR7HS-10	

2T STROKES		REF NGK	
DT30	1983-85	NGKBR7HS-10	
DT30C	1988-00	NGKBR7HS-10	
DT30E	1983	NGKBR7HS-10	
DT40	-1983	NGKB8HS	NGKBR8HIX
DT40C	1986-99	NGKB8HS-10	
DT40C/CR/TC	1998	NGKB8HS-10	
DT40W	1995	NGKB7HS-10	
DT40WK	1998	NGKB7HS-10	
DT40WK	-1997	NGKB7HS	
DT48M	2001	NGKB8HS-10	
DT48M	-2000	NGKB8HS	NGKBR8HIX
DT50	1979-83	NGKB8HS	NGKBR8HIX
DT50	-1978	NGKB7HS	
DT50	1984-89	NGKB8HS-10	
DT50ACR	1994-96	NGKB8HS-10	
DT50ACR	1993	NGKBR8HS	NGKBR8HIX
DT50C	1984-00	NGKB8HS-10	
DT50K		NGKB7HS	
DT50M/DT50	1986-89	NGKB8HS-10	
DT50M/DT50	-1985	NGKB8HS	NGKBR8HIX
DT50M/DT50	2001	NGKBR8HS-10	
DT55C	1988-98	NGKBR8HS-10	
DT55M/MQ	-2000	NGKB8HS	NGKBR8HIX
DT55M/MQ	2001	NGKBR8HS-10	
DT55TC/CRQ	1998	NGKBR8HS-10	
DT60		NGKB8HS-10	
DT60C	2001	NGKBR8HS-10	
DT60C	1986-87	NGKB8HS-10	
DT65/T	-1983	NGKBR8HS	NGKBR8HIX
DT65C	1988-99	NGKBR8HS-10	
DT65TC	1994-95	NGKBR8HS-10	
DT75/85	1990-92	NGKB8HS	NGKBR8HIX
DT75/85	1993-00	NGKBR8HS-10	
DT75C	2001	NGKBR8HS-10	
DT75C	1993-00	NGKB8HS	NGKBR8HIX
DT75M	2001	NGKBR8HS-10	
DT75M	-2000	NGKBR8HS	NGKBR8HIX
DT75TC	-2000	NGKB8HS	NGKBR8HIX
DT75TC	2001	NGKBR8HS-10	
DT85	-1992	NGKBR8HS	NGKBR8HIX
DT85C	2001	NGKBR8HS-10	
DT85C	1993-00	NGKBR8HS	NGKBR8HIX
DT85C	-1992	NGKBR8HS	NGKBR8HIX
DT85M	2001	NGKBR8HS-10	
DT85M	-2000	NGKBR8HS	NGKBR8HIX
DT85MQ	1995-96	NGKB8HS-10	
DT85Q	2001	NGKBR8HS-10	
DT85Q	-2000	NGKBR8HS	NGKBR8HIX
DT85TC	-2000	NGKB8HS	NGKBR8HIX
DT85TC	2001	NGKBR8HS-10	
DT85W	2001	NGKB8HS-10	
DT85W	-2000	NGKBR8HS	NGKBR8HIX

2T STROKES		REF NGK	
DT85WT	2001	NGKB8HS-10	
DT85WT	1995-96	NGKB8HS-10	
DT90	-2000	NGKBR8HCS-10	
DT90	2001	NGKBR8HS-10	
DT90TC	1996-97	NGKBR8HS	NGKBR8HIX
DT90TC	-1995	NGKBR8HCS-10	
DT90TC	1998	NGKBR8HS-10	
DT100	2001	NGKBR8HS-10	
DT100	1996-00	NGKBR8HS-10	
DT100	1990-95	NGKBR8HCS-10	
DT100	2000	NGKBR8HCS-10	
DT100TC	-1995	NGKBR8HCS-10	
DT100TC	1998	NGKBR8HS-10	
DT100TC	1996-97	NGKBR8HS	NGKBR8HIX
DT115	-1990	NGKB8HS	NGKBR8HIX
DT115	1992	NGKBR8HCS-10	
DT115C	1991-93	NGKBR8HCS-10	
DT115C	-1990	NGKB8HS	NGKBR8HIX
DT115C	2001	NGKBR8HS-10	
DT115S	1996	NGKBR8HS-10	
DT115STC	1996	NGKBR8HS-10	
DT115TC	-1988	NGKB8HS-10	
DT115TC		NGKBR8HCS-10	
DT115TC (EFI)		NGKBR8HS-10	
DT140	1992	NGKBR8HCS-10	
DT1140	-1990	NGKB8HS	NGKBR8HIX
DT140 EFI	1996	NGKBR8HS-10	
DT140C	1991-96	NGKBR8HCS-10	
DT1140C	-1990	NGKB8HS	NGKBR8HIX
DT140C EFI	1997	NGKBR8HCS-10	
DT140T	-2000	NGKBR8HCS-10	
DT140T	2001	NGKBR8HS-10	
DT140TC	-2000	NGKBR8HCS-10	
DT140TC EFI		NGKBR8HS-10	
DT150	1987-02	NGKBR8HS-10	
DT150G		NGKBR8HS-10	
DT150S		NGKBR8HS-10	
DT150SS		NGKBR8HS-10	
DT150STC		NGKBR8HS-10	
DT150TC	1989	NGKBR8HS-10	
DT150TC EFI		NGKBR8HS-10	
DT175	1989-02	NGKBR8HS-10	
DT175TC	-1988	NGKB8HS-10	
DT175TC	1989	NGKBR8HS-10	
DT200	1989-02	NGKBR8HS-10	
DT200G		NGKBR8HS-10	
DT200T		NGKBR8HS-10	
DT200TC	1989	NGKBR8HS-10	
DT200V		NGKBR8HS-10	
DT225	1991-02	NGKBR8HS-10	
DT225TC		NGKBR8HS-10	
DT225TCL EFI		NGKBR8HS	NGKBR8HIX

2T STROKES		REF CHAMPION
DT2	1977-96	CHAL90C
DT2.2	1997	CHAL90C
DT3.5	1979-84	CHAQL87YC
DT4	1985-98	CHAQL87YC
DT4.5	1977	CHAQL86C
DT5	1978-83	CHAQL87YC
DT5Y	1999-01	CHAQL82YC
DT6	1984-97	CHAQL87YC
DT6	1998-01	CHAQL87YC
DT7.5	1977-79	CHAQL86C
DT8	1980-87	CHAQL87YC
DT9	1977-79	CHAQL86C
DT9	1993	CHAQL86C
DT9.9C	1983-97	CHAQL82C
DT15	1983-88	CHAQL86C
DT15C	1989-97	CHAQL82C
T16	1977-82	CHAQL86C
DT20	1977-88	CHAQL82C
DT25C	1977-00	CHAQL82C
DT30C	1989	CHAQL82C
DT35	1989	CHAQL82C

2T STROKES		REF CHAMPION
DT40	1980-98	CHAQL78C
DT50	1997-84	CHAQL78C
DT55	1985-97	CHAQL78C
DT60	1983-84	CHAQL78C
DT65	1978-97	CHAQL78C
DT75	1983-97	CHAQL78C
DT85	1979-97	CHAQL78C
DT85	1998	CHAQL78C
DT90 V4	1989-97	CHAQL78C
DT100 V4	1989-01	CHAQL78C
DT115 Carb	1981-97	CHAQL78C
DT115 EFI	1996-01	CHAQL78C
DT115S EFI	1998	CHAQL78C
DT140 Carb	1981-96	CHAQL78C
DT140 EFI	1997-01	CHAQL78C
DT150 V6 EFI	1986-94	CHAQL78C
DT175 V6	1991-93	CHAQL78C
DT200 EFI	1986	CHAQL78C
DT225 EFI	1991	CHAQL78C

4T STROKES		REF CHAMPION
DF4	2003-04	CHARN9YC
DF6	2003-04	CHARN9YC
DF9.9	1997-04	CHARA8HC
DF15	1997-04	CHARA8HC
DF25	2000-04	CHARA8HC
DF30	2000-04	CHARA8HC
DF40	1999-04	CHARA8HC
DF50	1999-04	CHARA8HC
DF60	1998-04	CHARN9YC
DF70	1998-04	CHARN9YC
DF90	2001-04	CHARC9YC
DF115	2001-04	CHARC9YC
DF140	2002-04	CHARC9YC

CHAMPION





REF
CHAPROSU



REF
REC004

MOTORES DE ARRANQUE STARTERS MOTORINI AVVIAMENTO DEMARREURS

REF	OEM			2T STROKES	4T STROKES
PH130-0006	31100-96310 31100-96311 31100-94400 31100-94401 31100-944002 31100-89J00 31100-95D00	12V 0.6 kw	9 CCW	✔	✔

DF9.9, DF15 (1996-11)
DF25, DF30Y-K6 (2000-06)
DF25A, DF30A (2015+)
DT20, DT25, DT30G-Y (1986-00)
DT25, DT30 (1998-00)
DT40C-WG-X (1986-99)



REF	OEM			2T STROKES	4T STROKES
PH130-0053	31100-94600 31100-94601 31100-94610 31100-94500 31100-94510 31100-94511 31100-94512	12V 0.9kW	9 CCW	✔	

DT115, DT140G-Y (1986-00)



REF	OEM			2T STROKES	4T STROKES
PH130-0007	31100-95240 31100-95242 31100-95243	12V 1kW	9 CCW	✔	

DT50 (1980-83)
DT65 (1980-82)



REF	OEM			2T STROKES	4T STROKES
PH130-0075	31100-94702		9	✔	

DT55, DT65X-J (1988-99)



REF	OEM			2T STROKES	4T STROKES
PH130-0060	31100-95600 31100-95601 31100-95310 31100-95312 31100-95313 31100-95521		9	✔	

DT75-DT85Y-J (1988-00)



REF	OEM			2T STROKES	4T STROKES
PH130-0052	31100-87000 31100-87D00 31100-87D10 31100-92E00	12V 0.9kW	8	✔	

DT90, DT100L - Y (1990-00)
DT150, DT200, DT225W-K3 (1998-03)
V6H-Y (1987-00)



REF	OEM			2T STROKES	4T STROKES
PH130-0077	31100-95J00 31100-95J01 31100-94J10 31100-94J20 31100-94J21 31100-94J22	12V	9 CCW		✔

DF8A, DF9.9A (AR) (2010-16)
DF9.9, DF15 (R) (2004-11)
DF9.9B, DF15A, DF20A (2013)
DF15 (2012)
DF20R (2006-2011)
DF25, DF25R-V2 (2006-11)
DF40, DF50X-K10 (1999-10)
DF40A, DF50A, DF60A (2010-18)



REF	OEM			2T STROKES	4T STROKES
PH130-0071	31100-90J00 31100-90J01	12V 1.4kW	9 CCW		✔

DF90, DF100, DF115K1-K11 (2001-1
DF100A, DF115A, DF140A (2013+)
DF140 (2002-12)
DF140A (2013)



REF	OEM			2T STROKES	4T STROKES
PH130-0079	31100-87J00 31100-87J10 31100-87J11 31100-87500	12V	8		✔

DF40, DF50X-K10 (1999-10)
DF60, DF70W-K9 (1998-09)



REF	OEM			2T STROKES	4T STROKES
REC31100-98L10	31100-98L10	12V 1.4 kw	9 CW		✔

DF70A, DF80A, DF90A, DF100B (2018+)
DF325A, DF350A (2018+)
DF300B (2020+)
DF250A0, DF300AP (2018+)
DF200AT/AZ (2018)
DF200, DF225, DF250 (2019+)
DF150, DF175, DF200AP(AT) (2018+)

REF	OEM			2T STROKES	4T STROKES
PH130-0078	31100-96J01 31100-96J00 31100-93J00 31100-98L00 31100-98L10	12V	9		✔

DF70A, DF80A, DF90A (2009+)
DF70A, DF80A, DF90A -100B (2018+)
DF150AP, DF175AP, DF200AP (2018+)
DF150AT, DF175AT, DF200AT (2019)
DF150T/Z, DF175T/Z (2018)
DF150G/T/Z (2006+)
DF175G/T/Z (2006+)
DF200, DF225, DF250 (2004-12, 2019)
DF200AT/AZ (2018)
DF250AP, DF300AP (2018+)
DF300T/Z (2007-2011)
DF300AP (2012)
DF350, DF325A (2018+)



SOLENOIDE PARA MOTOR DE ARRANQUE | SOLENOID FOR STARTERS | SOLENOIDE PER MOTORINI AVVIAMENTO | SOLENOIDE POUR DEMARREUR

REF	OEM
REC89-825096T01	38410-94552 38410-89J00 38410-94550 38410-94551 31800-94400 31800-94401

DT40C-W G-X (1986-99)
DT55, DT65 J-X (1988-99)
DT75, DT85 J-Y (1988-00)
DF25, DF30 Y-K6 (200-06)
DT90, DT100L-Y (1990-00)
V6 H-Y (1987-00)
DT115, DT140G-Y (1986-00)

DT150, DT200, DT225W-K3 (1998-03)
DF40, DF50 X-K10 (1999-10)
DF115WT, DF140WT K3 (2003)
DF90, DF100,DF115 (2001-11)
DF60, DF70 W-K9 (1998-09)
DF140 (2002-11)



LLAVES DE ARRANQUE | IGNITION STARTER SWITCH | CHIAVI DI ACCENSIONE | CONTACTEUR A CLÉ

REF	OEM	2T STROKES	4T STROKES
REC37110-99E00	37110-99E00	✔	✔

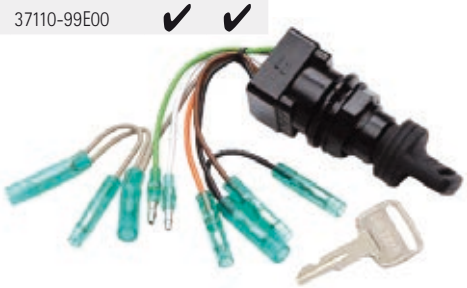

REF	OEM
REC37110-93J11	37110-93J11 37110-93J10

DF9.9 - DF250

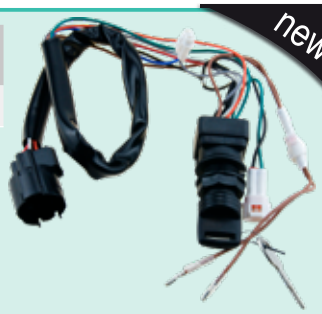

REGULADORES Y RECTIFICADORES | REGULATOR AND RECTIFIERS | REGOLATORI E RADDRIZATORI | REGULATEURS ET RECTIFIEURS

REF	OEM
REC32800-95D01	32800-95D01 32800-95D00 32800-95720

DF9.9 / DF15 (1996-11)
DT4-DT140 (1986-04)
V6 H-Y (1987-00)



REF	OEM
REC32800-94620	32800-94620 92800-94610

DT115, DT140

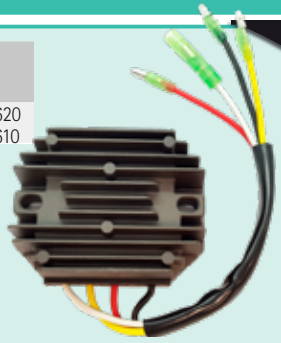

new

REF	OEM
REC32800-94J11	32800-94J11 32800-94J10

DF9.9B, DF15A, DF20A



new

REF	OEM
REC32800-99J00	32800-99J00

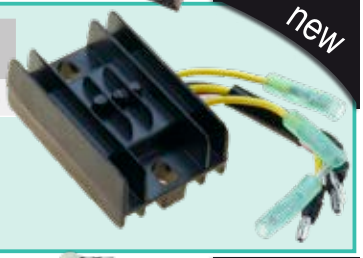

new

REF	OEM
REC32800-89L01	32800-89L01 32800-89L00

DF9.9B, DF15A, DF20A

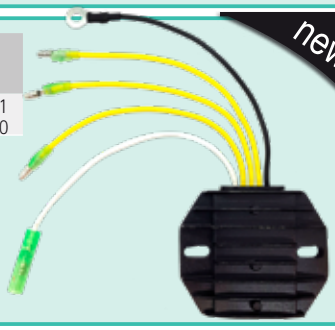

new

REF	OEM
REC32800-89J00	32800-89J00

DF25, DF30 Y-K6



new

REF	OEM
REC32800-89J11	32800-89J10 32800-89J11

DF25, DF30 Y-K6



new

REF	OEM
REC32800-93J03	32800-93J03 32800-93J02 32800-93J01

DF200, DF225, DF250



new

REF	OEM
REC32800-38F10	32800-38F10

DF40, DF50X-K10



new

REF	OEM
REC32800-88L00	32800-88L00

DF40A, DF50A, DF60A



new

REF	OEM
REC32800-87L00	32800-87L00

DF70A, DF80A, DF90A, DF100B



new

REF	OEM
REC32800-87J10	32800-87J10

DF40, DF50X-K10

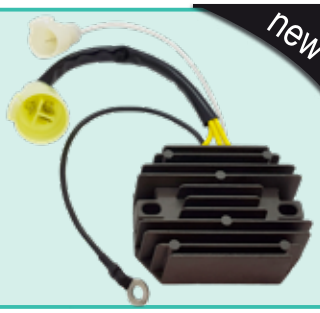

new

REF	OEM
REC32800-92E20	32800-92E20

DT150, DT200, DT225 W-K3

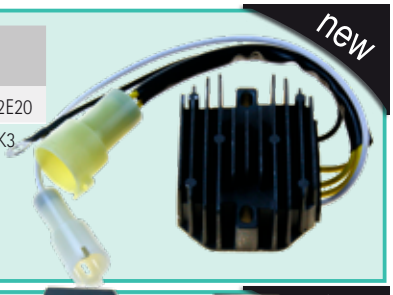

new

REF	OEM
REC32800-98J01	32800-98J01

DF250AP, DF300AP (2012+)
DF300T/Z (2007-11)



GUÍA REGULADORES Y RECTIFICADORES

	REF	
DF9.9B, DF15A, DF20A	REC32800-94J11	2013 +
	REC32800-89L01	2013 +
DF25, DF30 Y-K6	REC32800-89J00	2000-06
	REC32800-89J11	2000-06
DF25A, 30A	REC32800-88L00	2015-17
DF40, DF50X-K10	REC32800-38F10	1999-10

REGULATORS AND RECTIFIERS GUIDE

	REF	
DF40, DF50X-K10	REC32800-87J10	1999-10
DF40A, 50A, 60A	REC32800-88L00	2010-17
DF60, DF70 W-K9	REC32800-92E20	1998-09
DF70A, 80A, 90A, DF100B	REC32800-87L00	2009 +
DF200, 225, 250	REC32800-93J03	2004 +
DF250AP, 300AP	REC32800-98J01	2012+

GUIDA REGOLATORE E RETTIFICATORE

	REF	
DF300T/Z	REC32800-98J01	2007-11
DT4, DT5	REC32800-95D01	1998-01
DT15, 20, 25, 30, 40	REC32800-95D01	1986-02
DT115, DT140	REC32800-95D01	1986-00
	REC32800-94620	1986-00
DT150, 200, 225 W-K3	REC32800-92E20	1998-03

GUIDE REGULATEURS ET RECTIFIEURS

	REF	
DF300T/Z	REC32800-98J01	2007-11
DT4, DT5	REC32800-95D01	1998-01
DT15, 20, 25, 30, 40	REC32800-95D01	1986-02
DT115, DT140	REC32800-95D01	1986-00
	REC32800-94620	1986-00
DT150, 200, 225 W-K3	REC32800-92E20	1998-03

RELÉ | RELAY | RELE | RELAIS

RELÉ ECM | ECM RELAY | RELE ECM | RELAIS ECM

REF	OEM		4T STROKES
REC38860-76F01	38860-76F01	12V	✔

DF8 --> DF350

new



CDI Y CAJAS NEGRAS | CDI & POWER PACK | CDI E CENTRALINA | CDI ET BOITIER ELECTRONIQUE

REF	OEM
REC32900-93910	32900-93911

DT9.9K, DT15K-G-Y (1986-00)



REF	OEM
REC32900-94460	32900-94460 32900-94470

DT40C-W-G-X (1986-99)
DT40WK1-K4 (2001-04)



REF	OEM
REC32900-96371	32900-96371 32900-96350 32900-96370

DT20, DT25, DT30G-Y (1986-00)
DT25, DT30K1-K2 (2001-02)

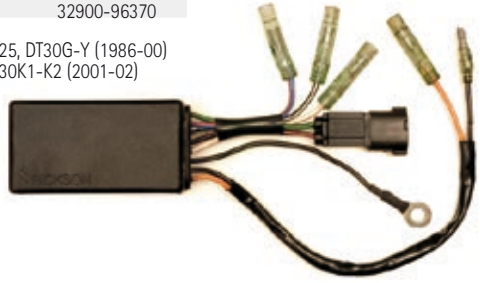

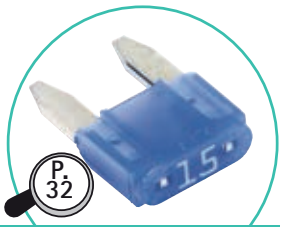

P. 32

DESCONECTORES DE SEGURIDAD | CUT OFF SWITCHES | CHIAVETTA DI SICUREZZA | COUPE CIRCUIT DE SECURITE

REF	OEM
REC37800-93954	37800-93954 37800-93953

DT2, DT2.2G-Y (1986-00)
DT20, DT25, DT30G-Y (1986-00)
DT25, DT30K1-K2 (2001-02)
DT40G-X-W-C (1986-99)
DT9.9, DT15K1-K5 (2001-04)
DT9.9K, DT15K-G-Y (1986-00)



REF	OEM
REC37820-92E03	37820-92E00

DT4, DT140HP
DF9.9, DF140 HP
V6H-Y



REF	OEM
REC37830-89E03	37830-95000 37830-89E02

DT15C (1989-97)
DT9.9, DT15K1-K4 (1986-00)
DT4, J4, DT5Y (1988-97)
DT5Y (1998-02)
DT5, DT6, DT8Y-G (1986-00)
DT6, DT8Y-K2 (2000-02)
DT8, DT9.9C-J-V (1988-97)
DT9.9K, DT15K-G-Y (1986-00)
DT75, DT85Y-J (1988-00)



new

REF	OEM	2T STROKES	4T STROKES
REC37830-95D04	37830-95D00/01/02/03/04	✔	✔

4-->30HP



KITS

Interruptor de encendido para todo tipo de motores fueraborda o intraborda

REF KIT	CUERDA WIRE CORDA CORDON	
REC40970	REC40990	1

KITS

Emergency and stop switch for inboard or outboards.



KIT

Interruttore di accensione per tutti i tipi di motori fuoribordo o entrobordo.

REF KIT	CUERDA WIRE CORDA CORDON	
GS11290	GS11291	1

KITS

Coupe circuit de sécurité pour moteur inboard ou hors-bord



REF KIT	
GS11292	1



REF	
GS11294	1



TRIM, TILT & POWER TRIM

INSTALACIÓN ELÉCTRICA

KIT CONVERSIÓN
Sustituye de 2 a 3 cables.

WIRING HARNESS

CONVERSION KIT
Converts 3-wire Tilt and Trim motors to 2-Wire design

INSTALLAZIONE ELETTRICA

KIT CONVERSIONE
Sustituisce da 2 a 3 cavi.

INSTALLATION ELECTRIQUE

KIT DE CONVERSION.
Passe un faisceau de 2 à 3 fils.

REF
PH200-WH01



TRIM COMPLETO

Motor de Trim para modelos antiguos.
Motor de 3 cables, para 2 cables instalar PH200-WH01.

COMPLETE TRIM ASSEMBLY

Trim for old models.
Trim with 3 wires, for convert to 3 wires, it needs PH200-WH01.

MOTORINO TRIM COMPLETO

Trim per modeli vecchio.
Trim con 3 cavi, per 2 cavi istallare PH200-WH01

MOTEUR DE TRIM

new

Pompe de Trim ancien modèle, avec faisceau 3 fils, pour les faisceaux à 2 fils il faut installer le kit PH200-WH01.

REF	OEM	2T STROKES	4T STROKES
PH200-T027	48500-95550-0ED 48500-95680-0ED	✔	

DT60, DT75, DT85, DT115, DT140 (1988-00)



REF	OEM			2T STROKES	4T STROKES
REC38100-87E10-0ED	38100-87D00 38100-87D0IT 38100-87D02H 38100-87E10-0ED 38100-87D01-0ED 38100-87D01-02M	12V	3	3	✔

DT90, DT100L-Y (1990-00)



REF	OEM				2T STROKES	4T STROKES
REC38100-96J00	38100-92J02 38100-92J10 38100-92J01 38100-93J02 38100-96J00 38100-96J01 38100-92J12	12V	4	2		✔

DF90, DF100, DF115K1-K11 (2001-11)
DF200, DF225, DF250 (2004-11)
DF300T/Z (2007-2011)
DF150T/Z (2006-12)



REF	OEM				2T STROKES	4T STROKES
REC38100-87J00	37100-87J00-0EP 38100-87J0EP	12V	4	2		✔

DF40, DF50X-K10 (1999-10)
TMY99-00



REF	OEM				2T STROKES	4T STROKES
PH200-T046	38100-87J11 38100-87J20	12V	4	2		✔

DF40, DF50X-K10 (1999-10)



new

REF	OEM			2T STROKES	4T STROKES
REC36120-ZY9-003	38100-87L03 38100-87L02 38100-87L01 38100-87L00	12V	4		✔

DF70A, DF80A, DF90A (2009-16)



new

REF	OEM				2T STROKES	4T STROKES
REC38100-99E01-0EP	38100-99E01-0EP 38100-99E01-00 38100-99E01-0ED	12V	2	2	✔	✔

DF60, DF70W-K9 (1998-09)
DT55, DT65J-X (1988-99)
DT75, DT85J-Y (1988-00)



REF	OEM				2T STROKES	4T STROKES
PH200-T024	38100-87D10-0ED 38100-87D10-35J 38100-87D10-0IT 38100-92E00-0ED 38100-87E20-0ED	12V	3	2	✔	

DT150, DT200, DT225W-K3 (1998-03)
V6H-Y (1987-00)



new

REF	OEM			2T STROKES	4T STROKES
REC36120-ZW4-H12	38100-88L12 38100-88L11 38100-88L00	12V	4		✔

DF40A, DF50A, DF60A (2010+)



new

REF	OEM			2T STROKES	4T STROKES
REC36120-ZY6-013	38100-90J40 38100-90J30 38100-93J13 38100-93J11	12V	4		✔

DF60, DF70 W-K9 (1998-09)



new

REF	OEM				2T STROKES	4T STROKES
REC38100-97E00-0ED	38100-97E00-0ED	12V	4	2	✔	

DT40C-W G-X (1986-99)



POWER TRIM COMPLETO — COMPLETE POWER TRIM ASSEMBLY — MOTORINO POWER TRIM COMPLETO — POWER TRIM COMPLET

REF	OEM	2T STROKES	4T STROKES
REC18-6865	48600-94511-0ED	✔	✔

3 RAM
115-225HP

SHOWA SYSTEM



new

REF	OEM	2T STROKES	4T STROKES
REC48503-93J12	48503-93J10 48503-93J12 48503-94900-0ED	✔	✔

DT115, DT140G-Y (1986-00)
DF90 --> DF250
Complete 3-Ram T/T System
SHOWA SYSTEM



RELÉ DE TRIM | TRIM RELAY | RELE TRIM | RELAIS DE TRIM

new

REF	OEM		2T STROKES	4T STROKES
REC38410-93J12	38410-93J12/11/10/00	40- 300 HP		✔

SENSORES DE TRIM | TRIM SENSORS | SENSORI TRIM | EMETTEUR DE TRIM

new

REF	OEM
REC34801-93J03	34801-93J03 34801-93J02 34801-93J01 34801-93J00

DF200, DF225, DF250 (2004+)



new

REF	OEM
REC34801-94710	34801-94710 34801-94700

DF25, DF30 Y-K6 (2000-06)
DF40, DF50 X-K10 (1999-10)
DF60, DF70 W-K9 (1998-09)
DT55, DT65 J-X (1988-99)
DT75, DT85 J-Y (1988-00)



new

REF	OEM
REC34801-99E04	34801-99E04 34801-99E03 34801-99E02 34801-99E01

DF25, DF30 (A) (2000+)
DF40, DF50 X-K10 (2001-11)
DF60, DF70 W-K9 (1998-09)
DF90, DF100, DF115 (2001-11)
DF115WT, DF115WT-K3 (2003)
DF140 (2002-12)
DF150, DF175 (G/T/Z) (2006+)
DF200, DF225, DF250 (2004+)



TAPONES DE TRIM | TRIM CAP | TAPPO TRIM | BOUCHON VERIN DE TRIM

new

REF	OEM
REC48630-96J03	48630-96J03 48630-96J02 48630-96J01

DF100A, DF115A, DF140A (2013-16)
DF140 (2000-12) (14002F/14002Z)
DF150T/Z, DF175T/Z (G) (2006-16)
DF150T (881864+)
DF150AP, DF175AP, DF200AP (2017+)
DF200, DF225, DF250 (2004-16)
DF200A/AP (2015-16)



new

REF	OEM
REC48630-94900	48630-94900

DF60, DF70W-K9 (1998-09)
DT115, DT140 G-Y (1986-00)



new

REF	OEM
REC48630-96J00	48630-96J00

DF150, DF175 T/Z (2006-11)

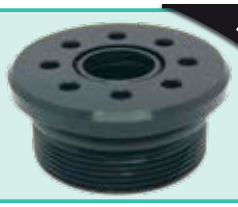

new

REF	OEM
REC48630-92J00	48630-92J00

DF140WT, DF140WT (2003)
DF140 (2002-11)
DF115WT, SF115WT K3 (2003)



new

REF	OEM
REC48630-98L01	48630-98L01 48630-98L00

DF250AP, DF300AP (2012-18)
(25003P/30002P)
DF200, DF225, DF250 (2004+)
DF300T/Z (2007-11)
DF350A, DF325A (2018+)
DF300B (2020)



new

REF	OEM
REC48630-93J00	48630-93J00

DF200, DF225, DF250 (2004-11)

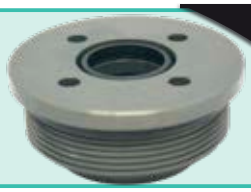

EXTRACTOR TAPONES TRIM | TRIM PLUGS EXTRACTOR | ESTRATTORE PER TAPPI DI TRIM | KIT EXTRACTEUR DE BOUCHONS TRIM

new

REF	
RECTOOLTRIMKIT	RECTOOLTRIM1 + RECTOOLTRIM2 + RECTOOLTRIM 3



REF					A
RECTOOLTRIM1	1/2"	+ RECPIN4	+	RECPIN4.5	38 mm
RECTOOLTRIM2	1/2"	+ RECPIN4	+	RECPIN4.5	32 mm
RECTOOLTRIM3	1/2"	+ RECPIN6			35 mm

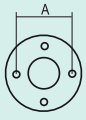

TRIM PISTON	TILT PISTON	
RECTOOLTRIM2	RECTOOLTRIM3	DF115 - DF300

REF	
RECPIN4	3 PIN x 4 mm
RECPIN4.5	3 PIN x 4.5 mm
RECPIN6	3 PIN x 6 mm



Los pines de repuesto no tienen garantía.
Replacement pins are not guaranteed.
I perni di ricambio non sono garantiti.
Les pins de remplacement ne sont pas garanties

MANDOS DE CONTROL | ENGINE CONTROLS | COMANDI DI CONTROLLO | BOITIER DE COMMANDE

MANDO LATERAL | SIDE CONTROL | COMANDO LATERALE | BOITIER LATERAL

new

RECmar

REF	OEM	POWER TRIM
REC67200-94J20	67200-94J20 67200-91J00 67200-91J01 67200-91J04	

DF8A, DF9.9A (2010+)
DF9.9, DF15 (2005-10)
DF25, DF30 (2005-08)
DF25A, DF30A (2014+)
DF25V-TWIN (2006+)

REF	RO OEM	POWER TRIM
REC67200-99E56	67200-99E56 67200-99E10-0EP 67200-99E30-0EP 67200-99E50 67200-99E51	✔

DF25, DF30 (W+W/O PT) (2000-04)
DF40, DF50 (1999-04)
DF60, DF70 (1998-04)

REF	RO OEM	POWER TRIM
REC67200-93J51	67200-93J51 67200-93J50 67200-93J06 67200-93J04 67200-93J03 67200-93J02 67200-93J01 67200-93J00	✔

DF25A, DF30A (2014+)
DF40, DF50 (2005-10)
DF40A,DF50A, DF50AV, DF60A, DF60AV (2010+)
DF60Q, DF70 (2005-10)
DF70A, DF90A (2010+)
DF90, DF115, DF140 (2005+)
DF150, DF175, DF200A (2006+)
DF200, DF225, DF250 (2005+)



REC67200-94J20

REC67200-99E56
REC67200-93J51

INTERRUPTOR DE TRIM MANDOS LATERALES | TRIM SWITCH SIDE CONTROLS | INTERRUTTORE TRIM COMANDO LATERALE | INTERRUPTEUR TRIM BOITIER LATERAL

new

REF	OEM
REC37850-90J06	37850-90J00,01,02,03,04,05,06

DF25 -->DF250



MANDO PARA CONSOLA | CONSOLE CONTROL | COMANDO PER CONSOLLA | BOITIER POUR CONSOLE

SUZUKI (BINACLE)

new

REF	RO OEM	POWER TRIM
REC67200-88L00	67200-88L00 67200-93J12 67200-93J13	✔

RECMAR



REF	RO OEM	POWER TRIM
REC67200-88L10	67200-88L10 67200-93J15	✔



INTERRUPTOR DE TRIM MANDOS CONSOLA SIMPLE | TRIM SWITCH SINGLE CONTROLS | INTERRUTTORE TRIM PANELLO SINGOLO | INTERRUPTEUR TRIM CONSOLE SIMPLE

new

REF	OEM
REC37850-93J10	37850-93J10

DF8 -->DF250



INTERRUPTOR DE TRIM MANDOS CONSOLA DUAL | TRIM SWITCH DUAL CONTROLS | INTERRUTTORE TRIM PANELLO DOPPIO | INTERRUPTEUR TRIM CONSOLE DOUBLE

new

REF	OEM
REC37220-92E00	37220-92E00

DF40 -->DF250

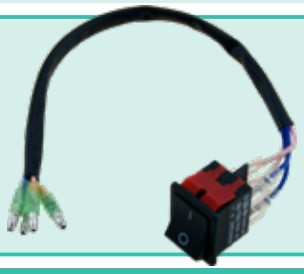

INTERRUPTORES PARA MANDOS | SWITCHS FOR ENGINE CONTROLS | INTERRUTTORI PER CONTROLLO | INTERRUPTEUR DE CONTRÔLE

INTERRUPTOR PANEL | SWITCH | INTERRUTTORE PANELLO | TABLEAU DE DEMARRAGE

new

REF	OEM	
REC37100-96J25	37100-96J20 37100-96J21 37100-96J22 37100-96J23 37100-96J24 37100-96J25	1
REC37100-96J15	37100-96J14 37100-96J15	2

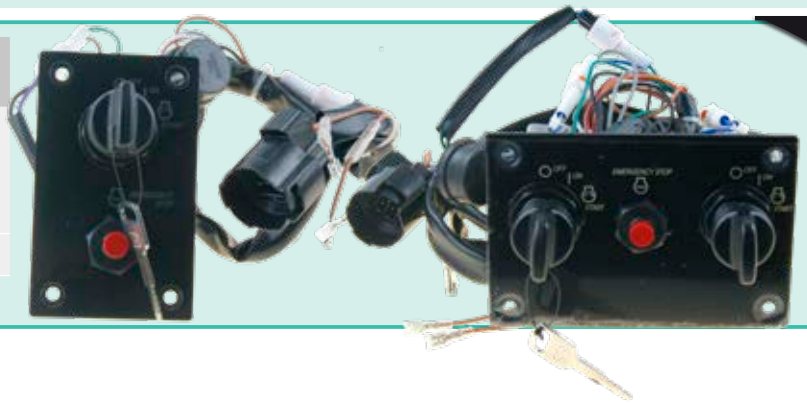

ARNÉS | ARNES | CAVI | FAISCEAU ELECTRIQUE

EXTENSIÓN DE ARNÉS SISTEMAS ANALOGICOS | ARNES EXTENSION ANALOGIC SYSTEM | ESTENSIONE SISTEMA ANALOGICO | RALLONGE FAISCEAU SISTEME ANALOGIQUE

REF	OEM		POWER TRIM
REC36620-93J02	36620-93J02	5 m	✔
REC36620-94J01	36620-94J01	5 m	



REC36620-93J02

new

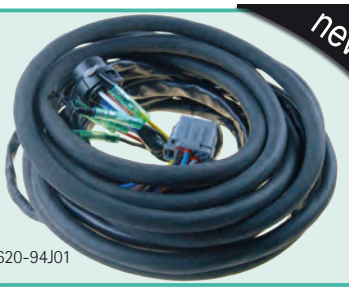

REC36620-94J01

COMPONENTES | COMPONENTS | COMPONENTI | COMPOSANT

CONECTORES DE CABLES | CABLE CONNECTOR | CAVO CONNETTORE | EMBOUT DE CABLE

REF	OEM
PAF25-07000007W	67275-95600



CLIP | CLIP | CLIP | CLIP

REF	OEM
PAGB/T896-6	57292-94300



PLACA CERRADURA SELECTOR | BLOCK CONTROL HANDLE | PLACCA SERRATURA SELETTORE | CALE POIGNEE DE CONTRÔLE

REF	OEM
PAF15-13010010W	67256-95600

new

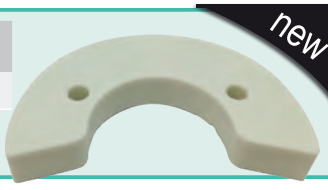

CASQUILLO BASCULANTE | BUSH, SWIVEL | TAPPO GIREVOLE | BAGUE

REF	OEM
REC43211-87JL0	43211-87JL0 43211-94401

DF8 (2010+)
DF9.9 (2004+)
DF15 (2004+)
DF20 (2011+)



REF	OEM
REC43211-94401	43211-94401

DF15 (1989-97)
DT35 (1986-89)
DT40 (1986-98)
DF9.9 (2006-10)
DF15 (2004-10)
DF25 (2000-07)
DF30 (2000-07)
DF40 (1999-10)
DF50 (1999-10)



REF	OEM
REC43711-97E11	43711-97E00 43711-97E11

DT40 --> DT225 HP
DF40 --> DF300 HP

new



CABLE DE ACELERADOR — THROTTLE CABLE — CAVO ACCELERATORE — CÂBLE D'ACCELERATEUR

REF	OEM		
REC63610-89E01	63610-89E01-000		DT15C (1989-97)
REC63610-93501	63610-93501-000		DT9.9 - 16 (1982-92)
REC63610-96302	63610-96302-000	490 mm	D20, DT25, DTG-Y (1986-00)
REC63610-96321-000	63610-96321-000	560 mm	DT9.9K, DT15K-G-Y (1986-00) DT9.9, DT15K1-K4 (2001-04)
REC63610-94402	63610-94402-000		DT40C-W-G-X (1986-99) DT40W-K1-K4 (2001-04)
REC63610-91J20	63610-91J20 63610-91J00 63610-91J01 63610-91J03 63610-91J04		DF4, DF5, DF6 (2002-15) new



CABLES DE CONTROL — CONTROL CABLES — CAVI COMANDO — CÂBLES DE COMMANDE

Recorrido trabajo: 76 mm. Rosca 10-32" — Travel 3" Threaded 10-32" — Estensione 76 mm Filetto 10-32" — Course: 76 mm. Fil 10-32

maxflex

PRETECH Cable and Controls

REF	RO	
PRE3300C08	99105-11002-008	8' / 2,45 m
PRE3300C09	99105-11002-009	9' / 2,75 m
PRE3300C10	99105-11002-010	10' / 3,05 m
PRE3300C11	99105-11002-011	11' / 3,35 m
PRE3300C12	99105-11002-012	12' / 3,65 m
PRE3300C13	99105-11002-013	13' / 3,95 m
PRE3300C14	99105-11002-014	14' / 4,25 m
PRE3300C15	99105-11002-015	15' / 4,60 m
PRE3300C16	99105-11002-016	16' / 4,90 m
PRE3300C17	99105-11002-017	17' / 5,20 m
PRE3300C18	99105-11002-018	18' / 5,50 m
PRE3300C19	99105-11002-019	19' / 5,80 m
PRE3300C20	99105-11002-020	20' / 6,10 m
PRE3300C21	99105-11002-021	21' / 6,40 m
PRE3300C22	99105-11002-022	22' / 6,70 m
PRE3300C23	99105-11002-023	23' / 7,00 m
PRE3300C24	99105-11002-024	24' / 7,30 m
PRE3300C25	99105-11002-025	25' / 7,60 m
PRE3300C26	99105-11002-026	26' / 7,90 m
PRE3300C27	99105-11002-027	27' / 8,25 m
PRE3300C28	99105-11002-028	28' / 8,55 m
PRE3300C29	99105-11002-029	29' / 8,85 m
PRE3300C30	99105-11002-030	30' / 9,15 m

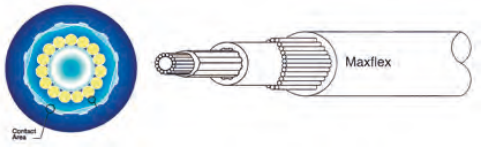

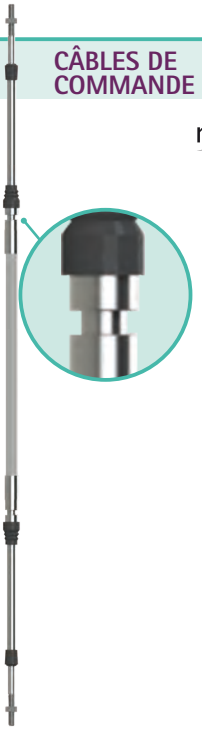

DIRECCIÓN HIDRÁULICA — HYDRAULIC STEERING — TIMONERIA IDRAULICA — DIRECTION HYDRAULIQUE

Bomba de aluminio, con válvula antiretorno incorporada. Cilindro de aluminio y acero inoxidable, con purgadores. Se suministra completa con racors, tubo flexible de rilsan y 2L de aceite hidráulico

Helm pump made in aluminum, with non-return valve incorporated. Cylinder in aluminum and stainless steel, with breather valves. Completed with racors, rilsan tubing and 2L hydraulic oil.

Corpo pompa in alluminio, con valvola anti-ritorno incorporata. Cilindo in alluminio e acciaio inox, con spurgo. Si vende completa di raccordi, tubo flessibile e 2 l di olio idraulico.

Corps de pompe en aluminium, avec clapet anti-retour intégré. Vérin en aluminium et acier inox, avec purge. Kit vendu complet avec raccords, flexible et 2L d'huile hydraulique.

				TX4200K 150 HP	TX6400K 300 HP
Modelo bomba	Pump model	Modello pompa	Modèle pompe	BayStar	SeaStar
Capacidad bomba	helm volume	Cap. Pompa	Capacité	23 cm^3	27,8 cm^3
Modelo cilindro	Cylinder model	Mod. Cilindro	Mod. vérin	HC4645H	HC5345H
Capacidad cilindro	Cylinder volume	Cap. Cilindro	Capacité	105 cm^3	139 cm^3
Carrera del pistón	Cylinder travel	Corsa pistone	Course	206 mm	206 mm
Nº vueltas babor-estribor	Turns lock to lock	N° giri a destra e sinistra	Nombre de tours	5	5
Manguera con racors	Hose with racors	Tubo con raccordo	Tuyaux avec raccords	2 x 6 m	2 x 7 m
Velocidad máxima	Max. speed	Velocità max	Vitesse max	50 kn	65 kn

BayStar



SeaStar



SISTEMA DE REFRIGERACIÓN
COOLING SYSTEM
SISTEMA DI RAFFREDDAMENTO
SYSTÈME DE REFROIDISSEMENT

TERMOSTATO THERMOSTAT TERMOSTATO THERMOSTAT

TERMOSTATO THERMOSTAT TERMOSTATO THERMOSTAT

REF	OEM	°C
REC67F-12411-01	17670-93J00	60°

DF70A, DF80A, DF90A (2009+)
DF100B (2018+)
DF90, DF100, DF115 (2001-11)
DF140 (2002-12)
DF115WT, DF140WTK-3 (2003)
DF150T/Z, DF175T/Z (2006-11)
DF200, DF225, DF250 (2004+)
DF300T/Z (2007-11)



new

REF	OEM	°C
REC17670-87J00	17670-87J00	72°

DF40, DF50X-K10 (1999-10)
DF60, DF70W-K9 (1998-09)



new

REF	OEM	°C
REC17670-90J10	1770-90J10	71°

DF100A, DF115A, DF140A (2013+)
DF140 (2002-12)
DF150, DF175 (2006+)
DF200, DF250, DF225 (2004+)
DF300 (2019+)
DF70, DF80, DF90 (A) (2009+)
DF100B (2018+)
DF90, DF100, DF115 (2001-11)



new

REF	OEM	°C
REC17670-90J20	17670-90J20	50°

DF100, DF115, DF140 (2013+)
DF150, DF175. DF200 (2018+)
DF150, DF175 (2012+)
DF200A/AP/AT (2015+)
DF250AP, DF300AP (2012+)



new

REF	OEM	°C
REC17670-91J01	17670-91J01 17670-91J00	50°

DF2.5 (2006)
DF4, DF5, DF6 (2002+)
DF9.9B, DF15A, DF20A (2013+)



new

REF	OEM	°C
REC17670-93962	17670-93962	50°

DF40, DF50X-K10 (1999-10)
DF60, DF70W-K9 (1998-09)
DT20, DT25, DT30G-Y (198600)
DT25, DT30 K1-K2 (2001-02)
DT40C-W G-X (1986-99)
DT40WK1-K4 (2001-04)
DT55, DT65J-X (1988-99)
DT9.9, DT15K1-K4 (2001-04)
DT9.9K, DT15K G-Y (1986-00)



new

REF	OEM	°C
REC17670-94402	17670-94402	60°

DF25, DF30Y-K6 (2000-06)
DF640, DF50X-K10 (1999-10)
DF60, DF70W-K9 (1998-09)
DF9.9, DF15 (1996-11)
DT20, DT25, DT30G-Y (1986-00)
DT25, DT30K1-K2 (2001-02)
DT40C-W G-X (1986-99)
DT40W K1-K4 (2001-04)
DT9.9, DT15 (1986-04)



new

REF	OEM	°C
REC17670-94J01	17670-94J01 17670-94J00	60°

DF8A, DF9.9A (AR) (2010+)
DF9.9, DF15 (R) (2004-12)
DF20R, DF25R/Q, V2 (2006-13)
DF25A, DF30A (2015+)





TAPÓN DE AGUA | WATER FLUSH PLUG | TAPPO ACQUA | BOUCHON DE REFROIDISSEMENT

REF	OEM
REC17913-93J00	17913-93J00

DF8 --> DF350



REF	OEM
REC17914-93J00	17914-93J00 17914-93JL0

new



IMPULSORES | IMPELLERS | GIRANTE | TURBINES

GUÍA DE IMPULSORES | IMPELLER GUIDE | GUIDA GIRANTE | GUIDE TURBINES

2T STROKES

		REF	OEM	CEF	A (mm)	B (mm)	C (mm)
DT4	1988-01	REC17461-98503	17461-98501,2,3	CEF500336	10,15	41	14
DT5	1986-02	REC17461-98503	17461-98501,2,3	CEF500336	10,15	41	14
DT6	1984-02	REC17461-98503	17461-98501,2,3	CEF500336	10,15	41	14
DT8	1980-87	REC17461-98503	17461-98501,2,3	CEF500336	10,15	41	14
DT8	1988-97	REC17461-92D02	17461-92D02	CEF500319	12,2	42	20
DT9,9	1980-87	REC17461-93004	17461-93001,3,4	CEF500398	15	70	12,5
DT9,9	1988-97	REC17461-92D02	17461-92D02	CEF500319	12,2	42	20
DT14	1977-80	REC17461-93004	17461-93001,3,4	CEF500398	15	70	12,5
DT15	1986-97	REC17461-93903	17461-93901,2,3	CEF500329	13,2	42	22
DT16	1977-82	REC17461-93004	17461-93001,2,3,4	CEF500398	15	70	12,5
DT20	1986-88	REC17461-96312	17461-96301	CEF500362G	17,1	67,5	16,18
DT25	1977-82	REC17461-93004	17461-93001,2,3,4	CEF500398	15	70	12,5
DT25	1983-88	REC17461-96312	17461-96301	CEF500362G	17,1	67,5	16,18
DT25	1989-00		17461-96400	CEF500399	17,2	67	16,16
DT28	1972-82	REC17461-93004	17461-93002	CEF500398	15	70	12,5
DT30	1983-85	REC17461-96312	17461-96301	CEF500362G	17,1	67,5	16,18
DT30	1989-00		17461-96400	CEF500399	17,2	67	16,16
DT35	1987-89	REC17461-96312	17461-96301	CEF500362G	17,1	67,5	16,18
DT40	1983	REC17461-94700	17461-95201	CEF500312	19,13	51,8	19
DT40	1984-98	REC17461-96312	17461-96310	CEF500362G	17,1	67,5	16,18
DT50	1978-84	REC17461-95300	17461-95501,95300	CEF500360	20,1	67,5	19
DT55	1985-97	REC17461-94700	17461-94700,1	CEF500361	17,1	67	19
DT60	1983	REC17461-94700	17461-95200	CEF500361	17,1	67	19
DT60	1984	REC17461-96312	17451-96301	CEF500362G	17,1	67,5	16,18
DT65	1985-97	REC17461-94700	17461-94701	CEF500361	17,1	67	19
DT75	1983-97	REC17461-95300	17461-95501,95300,1,2	CEF500360	20,1	67,5	19
DT85	1983-00	REC17461-95300	17461-95501,95300,1,2	CEF500360	20,1	67,5	19
DT90	1988+	REC17461-87E12	17461-87E12	CEF500365	22,2	78,3	35,1
DT100	1988+	REC17461-87E12	17461-87E12	CEF500365	22,2	78,3	35,1
DT115	1986-01	REC17461-90J01	17461-94510	CEF500367	24,3	86	31,7
DT140	1986-01	REC17461-90J01	17461-94510	CEF500367	24,3	86	31,7
DT150	1987-96	REC17461-90J01	17461-90J01	CEF500367	24,3	86	31,7
DT200	1998-03	REC17461-90J01	17461-90J00	CEF500367	24,3	86	31,7
DT225	1998-2003	REC17461-90J01	17461-90J00	CEF500367	24,3	86	31,7

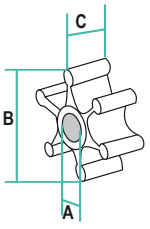



REC17461-98503



REC17461-92D02



REC17461-93004



REC17461-93903



REC17461-96312



REC17461-94700



REC17461-95300



REC17461-87E12



REC17461-90J01

4T STROKES

		REF	OEM	CEF	A (mm)	B (mm)	C (mm)
DF2.5	2003+	REC17461-97JM0	17461-97110				
DF4	2003+	REC17461-98503	17461-98503	CEF500336	10,15	41	14
DF6	2003+	REC17461-98503	17461-98503	CEF500336	10,15	41	14
DF8	2010+	REC17461-93903	17461-93903	CEF500329	13,2	42	22
DF9,9	2004+	REC17461-93903	17461-93903	CEF500329	13,2	42	22
DF15	2004+	REC17461-93903	17461-93903	CEF500329	13,2	42	22
DF25	1999-10	REC17461-96312	17461-96312	CEF500362G	17,1	67,5	16,18
DF25A	2015+	REC17461-96312	17461-94L00				
DF30	1999-07	REC17461-96312	17461-96312	CEF500362G	17,1	67,5	16,18
DF30A	2015+	REC17461-96312	17461-94L00				
DF40	1999+	REC17461-96312	17461-96312	CEF500362G	17,1	67,5	16,18
DF50	1999+	REC17461-96312	17461-96312	CEF500362G	17,1	67,5	16,18
DF60	1998-09	REC17461-87E12	17461-87E10,11,12	CEF500365	22,2	78,3	26
DF70	1998+	REC17461-87E12	17461-87E10,11,12	CEF500365	22,2	78,3	26
DF80	2010+	REC17461-87E12	17461-87E10,11,12	CEF500365	22,2	78,3	26
DF90	2010+	REC17461-87E12	17461-87E10,11,12	CEF500365	22,2	78,3	26
DF100	2001+	REC17461-90J01	17461-90J01	CEF500367	24,3	86	31,7
DF115	2002+	REC17461-90J01	17461-90J01	CEF500367	24,3	86	31,7
DF140	2002+	REC17461-90J01	17461-90J01	CEF500367	24,3	86	31,7
DF150	2008+	REC17461-90J01	17461-90J01	CEF500367	24,3	86	31,7
DF175	2007+	REC17461-90J01	17461-90J01	CEF500367	24,3	86	31,7
DF200	2004+	REC17461-93J00	17461-93J00	CEF500393	24,3	87	39
DF225	2004+	REC17461-93J00	17461-93J00	CEF500393	24,3	87	39
DF250	2004+	REC17461-93J00	17461-93J00	CEF500393	24,3	87	39
DF300	2007+	REC17461-93J00	17461-93J00	CEF500393	24,3	87	39

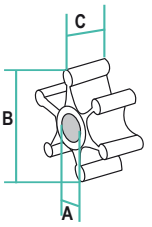


REC17461-97JM0


REC17461-98503


REC17461-96312


REC17461-87E12


REC17461-90J01


REC17461-93J00

CHAVETA KEY CHIAVETTA CLAVETTE

REF	OEM	
REC09420-03005	09420-03005 09420-03009	REC17461-93903

DF15 (2012)
DF8Z, DF9.9A (AR) (2010+)
DF9.9, DF15 (R) (2004-11)
DF9.9B, DF15A, DF20A (2013+)



REF	OEM
REC17462-93990	17462-93990



DT9.9 (1983-87)
DT15 (1983-97)
DF9.9 (2004-10)
DF15 (2004-10)

new

REF	OEM	
REC09420-03002	09420-03002	REC17461-98503

DF4, DF5, DF6 (2006+)
DT4/J4, DT5Y (1988-00)
DT4K1 (2001)
DT5, DT6, DT8G-Y (1986-00)
DT5Y (1998-02)
DT6, DT8Y-K2 (2000-02)



new

REF	OEM
REC09420-05009	09420-05009 09420-05006

DF115WT, DF140WT K3 (2003)
DT115, DT140G-Y (1986-00)
DT150, DT200, DT225W-K3 (1989-03)
V6H-Y (1987-00)
DF100A, DF115, DF140A (2013+)
DF140 (2002-12)
DF150, DF175 (2006+)
DF200, DF225, DF250 (2004+)
DF250AP. DF300AP (2013+)
DF350, DF300 (2007)
DF90, DF100, DF115 (2001-11)



new

REF	OEM	
REC09420-04006	09420-04006	REC17461-96312

DF20R, DF25 (RVZ) (2006-11)
DF25/R/QVZ (2013)
DF25, DF30Y-K6 (2000-06)
DF40, DF50X-K10 (1999-10)
DF40A, DF50A, DF60A (2010+)
DT20, DT25, DT30G-Y (1986-00)
DT25, DT30 K1-K2 (2001-02)
DT25C, DT30C K-Y (1989-00)
DT40C-W G-X (1986-99)
DT40W K1-K4 (2001-04)



TAPA DEL IMPULSOR — IMPELLER PLATE — COPERCHIO GIRANTE — PLAQUE DE POMPE À EAU

REF	OEM
REC17471-92J02	17471-93J02 17471-93J01 17471-93J00

DF150, DF175 (T/Z) (2006+)
DF200, DF225, DF250 (2004+)
DF150AP, DF175AP, DF200AP (2017+)
DF150AT, DF175AT, DF200AT (2019)
DF200A/AP (2015-17)
DF200AT/AZ (2018)



REF	OEM
REC17471-92J00	17471-92J00 17471-87E00 17471-87E01

DT90, DT100L-Y (1990-00)
DF60, DF70W-K9 (1998-09)
DF90, DF100, DF115 (2001-11)
DF140 (2002-12)
DF100A, DF115A, DF140A (2013+)



REF	OEM
REC17471-95J01	17471-95J01 17471-95J00

DF20R, DF25, DF25R/Q (V2) (2006-13)
DF40A, DF50A, DF60A (2010+)



REF	OEM
REC17471-97J00	17471-97J00-00

DF2.5 (2006-11)



REF	OEM
REC17471-98601	17471-98601 17471-98600

DT4-J4-DT5Y (1988-00)
DT4K1 (2001)
DT5Y (1998-02)



REF	OEM
REC17471-97JL0	17471-97JL0

DT2.5 (2012+)



REF	OEM
REC17471-94401	17471-94401

DF25, DF30Y-K6 (2000-06)
DF40, DF50X-K10 (1999-10)
DF20, DF25, DF30G-Y (1986-00)
DF25C, DT30C-K-Y (1989-00)
DT40C-W-G-X (1986-99)
DT25, DT30 K1-K2 (2001-02)
DT40W - K1-K4 (2001-04)



REF	OEM
REC17471-93902	17471-93902

DF9.9(R)T-K3 (1996-11)
DF15(R)-K3 (1996-12)
DT15C (1989-97)
DT9.9, DT15K1-K4 (2001-04)
DT9.9K, DT15K-G-K4 (2001-04)
DT9.9K, DT15K-G-Y (1986-00)



BOMBA DE AGUA — WATER PUMP — POMPA ACQUA — POMPE À EAU

CUERPO BOMBA DE AGUA — HOUSING, WATER PUMP — CORPO, POMPA ACQUA — CORPS DE POMPE À EAU

REF	OEM
REC17411-93901	17411-93901 17410-93910

DT9.9, DT15 K1-K4 (2001-04)
DT9.9K, DT15K-G-Y (1986-00)
DT15C (1989-97)
DF9.9, DF15 (R) (2004-11)
DF9.9, DF15T-K3 (1996-03)



REF	OEM
REC17411-94421	17411-94421 17410-94431

DF40, DF50X-K10 (1999-10)
DT20, DT25, DT30G-Y (1986-00)
DT25, DT30 K1-K2 (2001-02)
DT40C-W-G-X (1986-99)
DT40W K1-K4 (2001-04)
DF25, FG30Y-K6 (2000-06)



REF	OEM
REC17450-93921	17450-93921 17450-93920 17450-93930 17450-93440

DT9.9K, DT15K G-Y (1986-00)



TAPA DE LA BOMBA — WATER PUMP, COVER — COPERCHIO POMPA — PLAQUE DE POMPE À EAU

REF	OEM
REC56130-94413-0EP	56130-94413-0EP 56130-94411-0EP

DF40, DF50X-K10 (1999-10)
DF40W-K1-K4 (2001-04)



new

REF	OEM
REC56130-96331-0EP	56130-96331-0EP 56130-96320-0EP

DT25, DT30



JUNTA BASE DE BOMBA — WATER PUMP, GASKET BASE — GUARNIZIONE BASE POMPA — JOINT, BASE DE POMPE À EAU

REF	OEM
REC17472-98J00	17472-98J00

DF250AP, DF300AP (2012+)
DF300T/Z (2007-11)

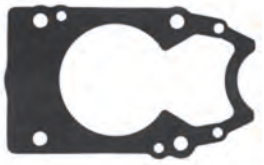

new

REF	OEM
REC17472-97JL0	17472-97JL0

DF2.5 (2012+)



new

REF	OEM
REC17472-97J00	17472-97J00

DF2.5 (2006-11)



new

REF	OEM
REC17472-87L00	17472-87L00

DF70A, DF80A, DF90A (2009+)
DF100B (2018+)



new

REF	OEM
REC17472-96303	17472-96301 17472-96302 17472-96303

DT20, DT25, DT30 (1986-04)
DF25, DF30 (2000-06)
DF20R, DF25R (VZ) (2006-13)
DF40, DF50 (1999-10)
DF40A, DF50A, DF60A (2010+)



new

REF	OEM
REC17472-87E10	17472-87E10 17472-87E00

DF100A, DF115A, DF140A (2013+)
DF115WT, DF140WT K3 (2003)
DF140 (2002-12)
DF60, DF70 W-K9 (1998-09)
DF90, DF100, DF115 (2001-11)
DF40A, DF50A, DF60A (2014+)
DT90, DT100L-Y (1990-00)



JUNTA TÓRICA BOMBA DE AGUA — WATER PUMP, O-RING — GUARNIZIONE — JOINT TORIQUE DE POMPE À EAU

new

REF	OEM
REC17417-92J00	17417-92J00

DF140 (2002-11)
DF90,DF100, DF115 (2001-11)



new

REF	OEM
REC17416-92J10	17416-92J10

DF100A, DF115A, DF140A (2013+)
DF140 (2002-12)
DF90, DF100, DF115 (2001-11)

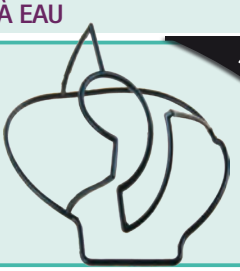

new

REF	OEM
REC17416-93J00	17416-93J00

DF200, DF225, DF250 (20004+)
DF250AP, DF300AP (2012+)
DF300T/Z (2007-11)
DF325A, DF350A (2018+)



new

REF	OEM
REC17416-95J00	17416-95J00

DF20R, DF25R (VZ) (2006-13)
DF40A, DF50A, DF60A (2010+)

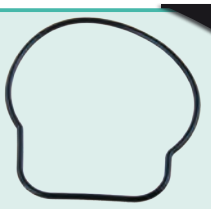

new

REF	OEM
REC17416-96J00	17416-96J00

DF150AP, DF175AP, DF200AP (2017+)
DF150AT, DF175AT, DF200AT (2019)
DF150T, DF175T (G)/Z (2006-18)
DF200A, DF200AP (2015-17)
DF200AT/AZ (2018)

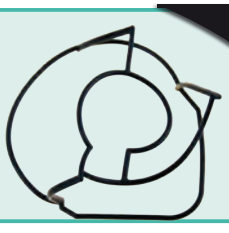

new

REF	OEM
REC17416-99E10	17416-99E10

DF40A, DF50A, DF60A (2014+)
DF70A, DF80A, DF90A (2009+)
DF100B (2018+)



JUNTAS BOMBA — WATER PUMP GASKET

REF	OEM
REC17452-93910	17452-93910

DF9.9, DF15T-K3 (1996-03)
DT15C (1989-97)
DT9.9K, DT15K-G-Y (1986-00)
DT9.9, DT15 K1-K4 (2001-04)



REF	OEM
REC17472-91J00	17472-91J00

DF4, DF5, DF6 (2002-14)



REF	OEM
REC17472-93J00	17472-93J00

DF200, DF225, DF250 (2004+)
DF200A (2015)
DF150, DF175T-Z (G) (2006-14)

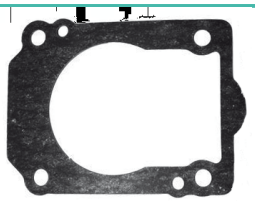

REF	OEM
REC17472-95310	17472-95310

DT55, DT65J-X (1988-99)



REF	OEM
REC17472-93911	17472-93911

DF9.9, DF15T-K3 (1996-03)
DT15C (1989-97)
DT9.9K, DT15K-G-Y (1986-00)
DT9.9, DT15K1-K4 (2001-04)



GUARNIZIONE POMPA — JOINTS POMPE

REF	OEM
REC17472-92D10	17472-92D10

DT8C, DT9.9C-J-V (1988-97)



REF	OEM
REC17472-98611	17472-98611

DT4 / J4, DT5Y (1988-00)
DT4K1 (2001)
DT5Y (1998-02)



REF	OEM
REC55122-94400	55122-88L00

DF40, DF50X-K10 (1999-10)
DF40A, DF50A, DF60A (2010+)



REF	OEM
REC17472-98503	17472-98503

DT5, DF6, DT8G-Y (1986-00)
DT6, DT8Y-K2 (2000-02)



CASQUILLO INOX — INSERT CUP

REF	OEM
REC17413-95J00	17413-95J00

DF40A, DF50A, DF60A (2010+)
DF20R, DF25, RVZ (2006-11)
DF20, DF25R, DF25QVZ (2013)



REF	OEM
REC17413-99E11	17413-99E11

DF40A, DF50A, DF60A (2014+)
DF70A, DF80A, DF90A (2009+)
DF100B (2018+)



GHIERA INOX — INSERT INOX

REF	OEM
REC17413-92J01	17413-92J01 17413-92J00

DF100A, DF115A, DF140A (2013+)
DF140 (2002-12)
DF90, DF100, DF115 (2001-11)

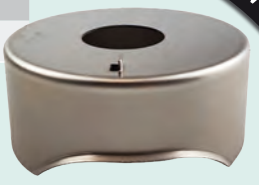

REF	OEM
REC17413-96J01	17413-96J01 17413-96J00

DF150, DF175 (2006+)
DF200A, AP (2015+)



KITS DE REPARACIÓN BOMBA DE AGUA / WATER PUMP SERVICE KITS

REF	OEM
REC17400-95351	17400-95550 17400-95350 17400-95351

DT75, DT85J-Y (1988-00)



REF	OEM
REC17400-94701	17400-94700 17400-94701

DT55, DT65J-X (1988-99)



REF	OEM
REC17400-96403	17400-96350 17400-96351 17400-96352 17400-96403 17400-96353

DT20, DT25, DT30G-Y (1986-00)
DT40C-W-G-X (1986-99)
DT25C, DT30C-K-Y (1989-00)
DF25, DF30 (2000-07)
DF40, DF50 (1999-10)



REF	OEM
REC17400-87D11	17400-87D10 17400-87D11 17400-87D00

V6H-Y (1987-00)
DT150, DT200, DT225W-K3 (1998-03)



REF	OEM
REC17400-87E04	17400-87E03

DT90, DT100L-Y (1990-00)
DF60, DF70W-K9 (1998-09)

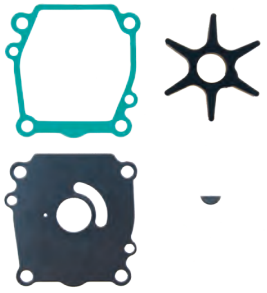

REF	OEM
REC17400-92D01	17400-92D01 17400-92D11

DT8C, DT9.9C-J-V (1988-97)



KIT RICAMBI POMPA ACQUA / KIT POMPE À EAU

REF	OEM
REC17400-93J01	17400-93J00 17400-93J01 17400-93J02 17400-93J03

DF200, DF225, DF250 (2004+)



REF	OEM
REC17400-98661	17400-98661 17400-986L0 17400-986L1

DF4, DF5, DF6 (2002-15)



REF	OEM
REC17400-98J01	17400-98J00 17400-98J01 17400-98J02

DF250AP, DF300AP (2012+)
DF300T/Z (2007-11)



REF	OEM
REC17400-98551	17400-98551

DT5,DT6, DT8G-Y (1986-00)
DT6, DT8Y-K2 (2000-02)



REF	OEM
REC17400-98652	17400-98652 17400-98661

DT4 /J4, DT5Y (1988-02)
DT4K1 (2001)



REF	OEM
REC17400-93951	17400-93950

DF9.9, DF15T-K3 (1996-03)
DT9.9K, DT15K-G-Y (1986-00)
DT15C (1989-97)



REF	OEM
REC17400-94611	17400-94611

DT115, DT140G-Y (1986-00)

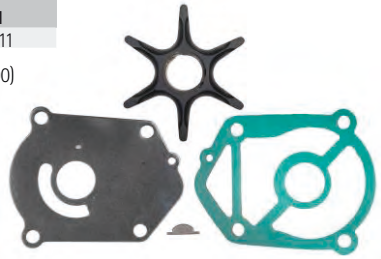

REF	OEM
REC17400-90J20	17400-90J11

DF90, DF100, DF115K1-K11 (2001-11)
DF140 (2002-11)

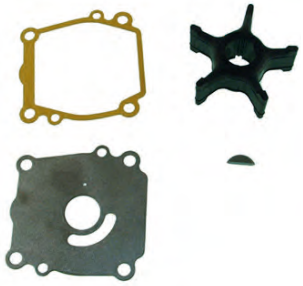

new

REF	OEM
REC17400-99J01	17400-99J00 17400-99J01

DF9.9A/AR/B (2010+)
DF8A/AR
DF15A
DF20A



new

REF	OEM
REC17400-93912	17400-93911 17400-93912

DT9.9, DT15K1-K4 (2001-04)
DT9.9K, DT15KG-Y (1986-00)



new

REF	OEM
REC17400-96J03	17400-96J00 17400-96J01 17400-96J02 17400-96J03

DF150, DF150G, DF150AP
DF170, DF175G, DF175AP
DF200A, DF200AP
(2006+)

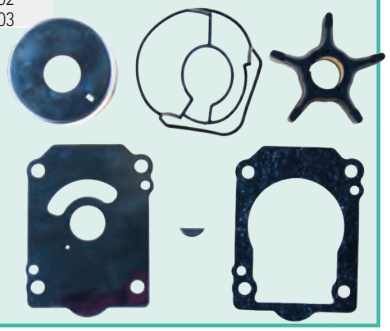

new

REF	OEM
REC17400-94L00	17400-94L00

DF25A, DF30A (2014+)



new

REF	OEM
REC17400-92J21	17400-92J21

DF100A, DF115, DF115A
DF140A, DF150AP, DF175AP
(2009+)



new

REF	OEM
REC17400-92J00	17400-92J200

DF90, DF100, DF115, DF140
(2006-08)

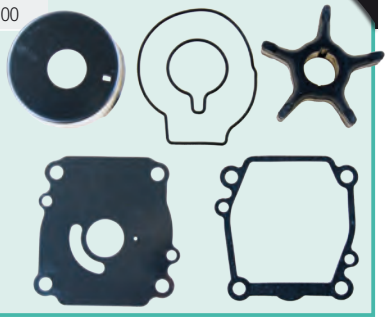

new

REF	OEM
REC17400-87L01	17400-87L00 17400-87L01

DF70A, DF80A, DF90A (2009+)



new

REF	OEM
REC17400-88L00	17400-88L00

DF40A, DF50A, DF60A (2010+)



new

REF	OEM
REC17400-94J00	17400-94J200

DF9.9, DF15 (2007+)



new

REF	OEM
REC17400-95J02	17400-95J01 17400-95J02

D25 V-TWIN (20106+)



GUÍA KITS DE BOMBA DE AGUA — GUIDE OF WATER PUMP SERVICE KITS — GUIDA KIT POMPA ACQUA — GUIDE KIT POMPE À EAU

2T STROKES		REF
DT4	1984-98	REC17400-98652
DT5	1992-02	REC17400-98652
DT6	1984-02	REC17400-98551
DT8	1986-97	REC17400-98551
DT9.9	1985-87	REC17400-98551
DT15C	1989-97	REC17400-98551
DT15	1983-88	REC17400-98551
DT8 DT9.9C	1988-97	REC17400-92D01
DT25C	1989-00	REC17400-96403
DT30C	1988-97	REC17400-96403
DT20	1985-88	REC17400-96403
DT25C	1984-88	REC17400-96403
DT30C	1984-87	REC17400-96403
DT35 DT40C	1983-98	REC17400-96403
DT55 DT65	1985-97	REC17400-94701
DT75 DT85	1985-00	REC17400-95351
DT115 DT140	1986-01	REC17400-94611
V6	1986-03	REC17400-87D11

4T STROKES		REF
DF4 DF6	2002+	REC17400-98661
DF9.9A	2010+	REC17400-99J01
DF9.9 DF15	2007+	REC17400-94J00
DF9.9 DF9.9B DF15 DF15A DF20A	1997-06	REC17400-93951
DF25 DF30	2000-07	REC17400-96403
DF40 DF50	1999-10	REC17400-96403
DF25A DF30A	2014+	REC17400-94L00
DF60 DF70	1998-10	REC17400-87E04
DF40A DF50A DF60A	2010+	REC17400-88L00
DF70A DF80A DF90A	2009+	REC17400-87L01
DF90 DF100 DF115 DF140	2006-08	REC17400-92J00

		REF
DF90 DF115 DF140	2001-05	REC17400-90J20
DF100A DF115 DF115A DF140A DF150AP DF175AP	2009+	REC17400-92J21
DF150 DF150G DF150AP DF175 DF175G DF175AP DF200A DF200AP	2006+	REC17400-96J03
DF200 DF225 DF250	2004+	REC17400-93J01
DF250SS DF300A DF300AP	2007+	REC17400-98J01

ÁNODO — ANODE — ANODI — ANODE

ZN	(KG)	AL	(KG)	OEM
CM55300-95500	0,018	CM55300-95500A	0,023	55300-95500

DF9.9 (2004-10)
DF15 (1996-03)
DF40, DF50 (1999-10)
DF40A, DF50A, DF60A (2010+)



ZN	(KG)	AL	(KG)	OEM
CM55320-98400	0,05	CM55320-98400A	0,046	55320-98400

DF9.9, DF15 (1997-10)



ZN	(KG)	AL	(KG)	OEM
CM55320-95310	0,08	CM55320-95310A	0,03	55320-95310

DF25 --> DF300 (2000+)



ZN	(KG)	AL	(KG)	OEM
CM55321-87J00	0,02	CM55321-87J00A	0,007	55321-87J00 55321-87J01

TORNILLO	TÓRICA
PAGB/T5783-M6X14	REC09280-22019



ZN	(KG)	AL	(KG)	OEM
CM41811-98500	0,05			41811-98500

DT4, DT15
DF9.9, DF15



ZN	(KG)	AL	(KG)	OEM
CM55321-94900	0,51	CM55321-94900A	0,21	55320-94900

DF60 --> DF300 HP



ZN	KG (KG)	AL	(KG)	OEM
CM55125-95500	0,25	CM55125-95500A	0,087	55125-87E01

DF40, DF50 (1999-10)
DF40A, DF50A, DF60A (2010+)



ZN	KG (KG)	AL	(KG)	OEM
CM55321-93900	0,08	CM55321-93900A	0,02	55320-93900

DF9.9, DF15 (1997-08)



ZN	KG (KG)	AL	(KG)	OEM
CM55125-87D00	0,34	CM55125-87D00A	0,14	55320-93900 55125-87801

50 --> 250 HP



ZN	KG (KG)	AL	(KG)	OEM
CM55125-96310	0,13	CM55125-96310A	0,07	55125-96310

20, 25, 30, 40 50 HP (1983-10)
DF25, DF30 (2000-10)
DF25 V-TWIN (2006+)



AL	(KG)	OEM
CM55125-95301A	0,06	55125-95301

55, 65 HP



ZN	KG (KG)	AL	(KG)	OEM
CM55125-94502	0,33			55125-94502

DT115 --> DT140 (1986-00)



ZN	KG (KG)	AL	(KG)	OEM
CM55320-98600	0,10	CM55320-98600A	0,034	55320-98600

DT4, DT5 (1988-02)



ZN	KG (KG)	AL	(KG)	OEM
CM55321-90J01	0,08	CM55321-90J01A	0,036	55321-90J01

DF60, DF70, DF90, DF115, DF140 (1998-10)



ZN	KG (KG)	AL	(KG)	OEM
CM11130-94600	0,02	CM11130-94600A	0,01	11130-94600

DT4 --> DT140 (1986-2002)

TORNILLO
PAGB/T5783-M6X14



KITS DE ÁNODOS — ANODES KIT — KIT ANODI — KIT ANODES

AL
CMSZ90140KITA

90, 100, 115, 140 hp



new

AL
CMSZ4050KITA

40 - 50 hp



new

ÁNODO ANODE ANODI ANODE

ZN	OEM	(KG)
TEN01208	55300-95500	0,08

DF9.9 (2004-10)
DF15 (1996-03)
DF40, DF50 (1999-10)
DF40A, DF50A, DF60A (2010+)



ZN	OEM	(KG)	Ø
TEN01210	55320-98400	0,05	7 mm
TEN01210/1	41811-98500	0,05	M6

DF9.9, DF15 (1997-10)



ZN	OEM	(KG)
TEN01212	55321-90J01	0,10

DF60, DF140 (1998-10)



ZN	OEM	(KG)	TORNILLO	TÓRICA
TEN01213	55321-87J00 55321-87J01	0,02	PAGB/T5783-M6X14	REC09280-22019

DF8 --> DF300



ZN	(KG)	AL	(KG)	OEM
TEN01214	0,51	TEN01214AL	0,20	55320-94900

DF60 --> DF30 HP



ZN	(KG)	OEM
TEN01202	0,095	55320-98600

DT4, DT5 (1988-02)



ZN	OEM	(KG)
TEN01211	55125-87D00 55120-87801	0,31

50 --> 70 HP
DT150, DT175, DT200, DT225
4T



ZN	OEM	(KG)
TEN01215	55125-90J01	0,25

Serie 7DF60- DF70
DF90 --> DF140 (1998+)



ZN	OEM	(KG)
TEN01200	55125-96310	0,15

20, 25, 30 HP
DF25, DF30 (2000-10)
DF25 V-TWIN (2006+)



ZN	(KG)	AL	(KG)	OEM
TEN01204	0,08	TEN01204AL	0,03	55320-98311 55320-95310

DF25, DF300 (2010+)



ZN	(KG)	OEM
TEN01201	0,16	55125-95301

DF40, DF50 (1999-10)
DF40A, DF50A, DF60A (2010+)



ZN	(KG)	OEM
TEN01206	0,05	55321-93900

DF9.9, DF15 (1997-08)



ZN	(KG)	OEM
TEN01207	0,19	55321-95500 55320-98600

75, 85, 90 HP



ZN	OEM	KG (KG)
TEN01203	41810-87D00	0,15



ZN	KG (KG)	OEM	TORNILLO
TEN01205	0,01	11130-94600	PAGB/T5783-M6X14

DT4 --> DT140 (1986-02)



ZN	KG (KG)	OEM
TEN01209	0,33	55321-94502 55125-94502

115 HP





new

ZN	KG (KG)	OEM
TEN01166	0,03	11281-94400

DT8 --> DT65 (1986-00)
DF60, DF70 (1998-09)

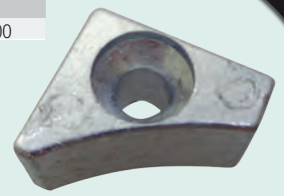

TORNILLO INOX | SS SCREW | VITE INOX | VIS INOX

new

REF	OEM	ÁNODO ANODE ANODO ANODE
PAGB/T5783-M6X14	09103-06281	CM55321-87J00 CM11130-94600 TEN01213 TEN01205

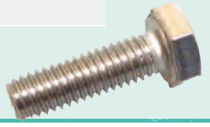

new

REF	OEM	ÁNODO ANODE ANODO ANODE
PAGB/T818-M6X14	09128-06221	11130-94600



new

REF	OEM	ÁNODO ANODE ANODO ANODE	
REC09116-06121	09116-06121	55321-94900	6 X 25



new

REF	OEM	ÁNODO ANODE ANODO ANODE	
REC09116-06094	09116-06094	55321-93J00	6 X 15



JUNTA TÓRICA | O-RING | O-RING | JOINT TORIQUE

new

REF	OEM	ÁNODO ANODE ANODO ANODE
REC09280-22019	09280-22019	CM55321-87J00 TEN01213

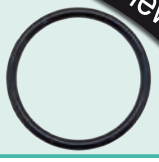

JUNTA TAPA DEL ÁNODO | GASKET, ANODE COVER | GUARNIZIONE, COPERCHIO ANODO | JOINT, COUVERCLE D'ANODE

new

REF	OEM
REC11265-87E10	11265-87E00 11265-87E00-H17

DF25 --> DF140



PARTES DEL MOTOR
ENGINE PARTS

PARTI MOTORE
PIECES MOTEUR

DESPIECE MOTOR DE 2 TIEMPOS | ENGINE PARTS 2 STROKES | PARTI MOTORI 2 TEMPI | PIECES DE MOTEURS 2 TEMPS

2T STROKES **DT40C-W-G-X (1986-99)**
DTW-K1-KA (2001-04)

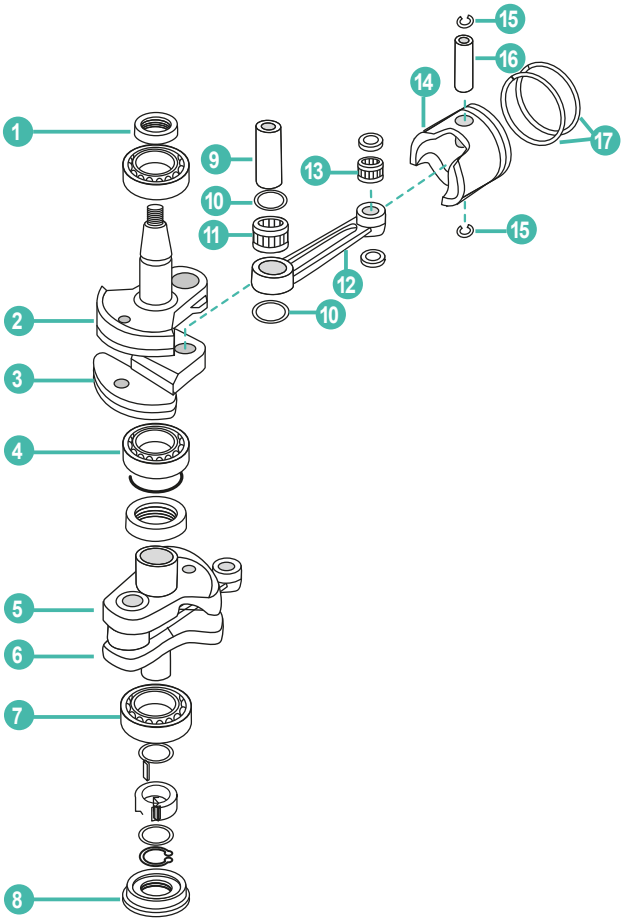

	REF	OEM					UN.
1	REC09283-35043	09283-35043	RETÉN	OIL SEAL	PARAOLIO	JOINT SPI	1
2	REC12221-94412	12221-94412	CIGÜEÑAL 1	CRANKSHAFT 1	ALBERO MOTORE 1	VILEBREQUIN 1	1
3	REC12231-94413	12231-94413	CIGÜEÑAL 2	CRANKSHAFT 2	ALBERO MOTORE 2	VILEBREQUIN 2	1
4	REC09269-30012	09269-30012	RODAMIENTO	BEARING	CUSCINETTO	ROULEMENT	1
5	REC12232-94412	12232-94412	CIGÜEÑAL 3	CRANKSHAFT 3	ALBERO MOTORE 3	VILEBREQUIN 3	1
6	REC12240-94432	12240-94432	CIGÜEÑAL 4	CRANKSHAFT 4	ALBERO MOTORE 4	VILEBREQUIN 4	1
7	REC09262-35052	09262-35052	RODAMIENTO	BEARING	CUSCINETTO	ROULEMENT	1
8	REC09283-30062	09283-30062	RETÉN	OIL SEAL	PARAOLIO	JOINT SPI	1
9	REC12211-94410	12211-94410	BULON CIGÜEÑAL	PIN CRANK	SPINOTTO	CLAVETTE	2
10	REC09160-27008	09160-27008	ARANDELA	WASHER	RONDELLA	RONDELLE	4
11	REC09263-27005	09263-27005	COJINETE BIELA	ROD BEARNG	CUSCINETTO BIELLA	ROULEMENT DE BIELLE	2
12	REC12161-94400	12161-94400	BIELA	CONNECTING ROD	BIELLA	BIELLE	2
13	REC09263-20072	09263-20072	COJINETE BIELA	ROD BEARNG	CUSCINETTO BIELLA	ROULEMENT DE BIELLE	2
14	REC12110-94400K	12110-94400K	KIT PISTON	PISTON KIT	KIT PISTONE	KIT PISTON	2
15	REC09381-20003	09381-20003	CLIP	CNAP RING	CLIP	CLIP	4
16	REC12151-94400	12151-94400	PIN	PIN	SPINA	AXE DE PISTON	2
17	REC12140-94400	12140-94400	KIT SEGMENTOS	RING SET	SET FASCE	KIT DE SEGMENS	2

4T STROKES DF40, DF50 (1999-10)

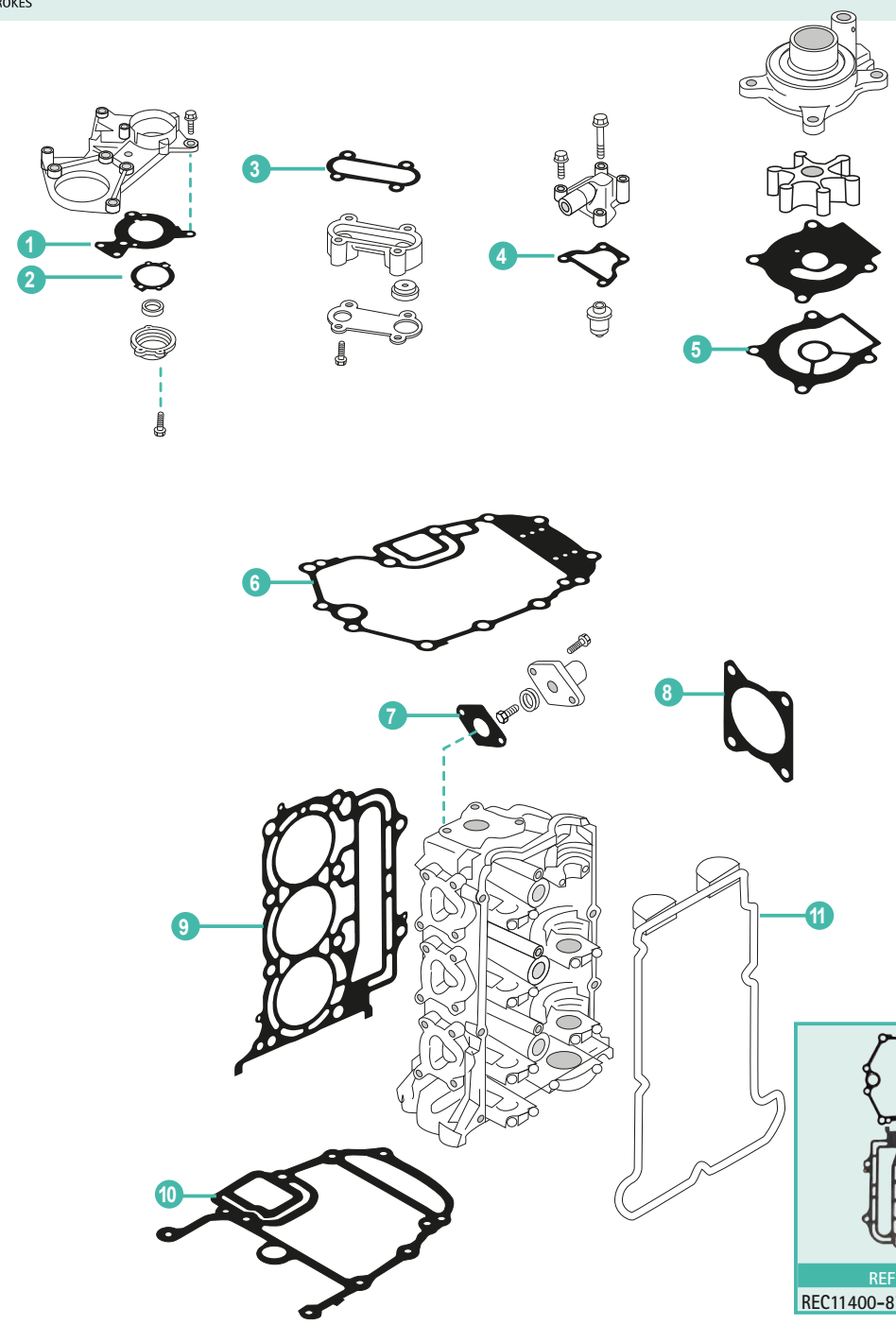

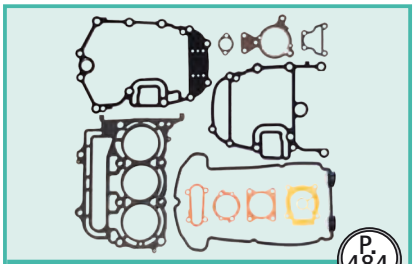

REF	OEM
REC11400-87804	11400-87804

	REF	OEM				
1	REC11413-87J00	11413-87J00	RETÉN SUPERIOR	SEAL UPPER	PARAOLIO SUPERIORE	JOINT SPI
2	REC11433-87J00	11433-87J00	JUNTA DEL RETÉN SUPERIOR	SEAL UPPER, GASKET	GUARNIZIONE PARAOLIO SUPERIORE	JOINT SPI
3	REC17616-87J00	17616-87J00	JUNTA DE LA VÁLVULA DE PRESIÓN	PRESURE VALVE, GASKET	GUARNIZIONE, VALVOLA PRESIONE	JOINT SOUPAPE DE PRESSION
4	REC17685-87D10	17685-87D10	JUNTA TAPA DE TERMOSTATO	THERMOSTAT COVER GASKET	GUARNIZIONE COPERCHIO TERMOSTATO	JOINT LOGEMENT THERMOSTAT
5	REC17472-96303	17472-96303	JUNTA DE LA BOMBA DE AGUA	WATER PUMP, GASKET	GUARNIZIONE POMPA ACQUA	JOINT POMPE À EAU
6	REC11489-87J00	11489-87J00	JUNTA DEL CÁRTER	OIL PAN, GASKET	GUARNIZIONE COPPA OLIO	JOINT DE CARTER
7	REC11265-87E10	11265-87E10	JUNTA TAPA DEL ÁNODO	GASKET, COVER ANODE	GUARNIZIONE COPERCHIO ANODO	JOINT D'ANODE D'ECHAPPEMENT
8	REC13421-87J00	13421-87J00	JUNTA DEL CUERPO DE MARIPOSA	THRPOTTLE BODY GASKET	GUARNIZIONE CORPO FARFALLATO	JOINT DE THROTTLE BODY
9	REC11141-87J02	11141-87J02	JUNTA DE CULATA	CYLINDER HEAD, GASKET	GUARNIZIONE TESTATA	JOINT DE CULASSE
10	REC51211-87J00	51211-87J00	JUNTA BASE MOTOR	GASKET ENGINE	GUARNIZIONE BASE MOTORE	JOINT DE TÊTE MOTRICE
11	REC11189-87J00	11189-87J00	JUNTA TAPA DE BALANCÍN	GASKET CYLINDER COVER	GUARNIZIONE COPERCHIO PUNTERIE	JOINT COUVERCLE

4T STROKES DF70A, DF80A, DF90A, DF100B (2009+)

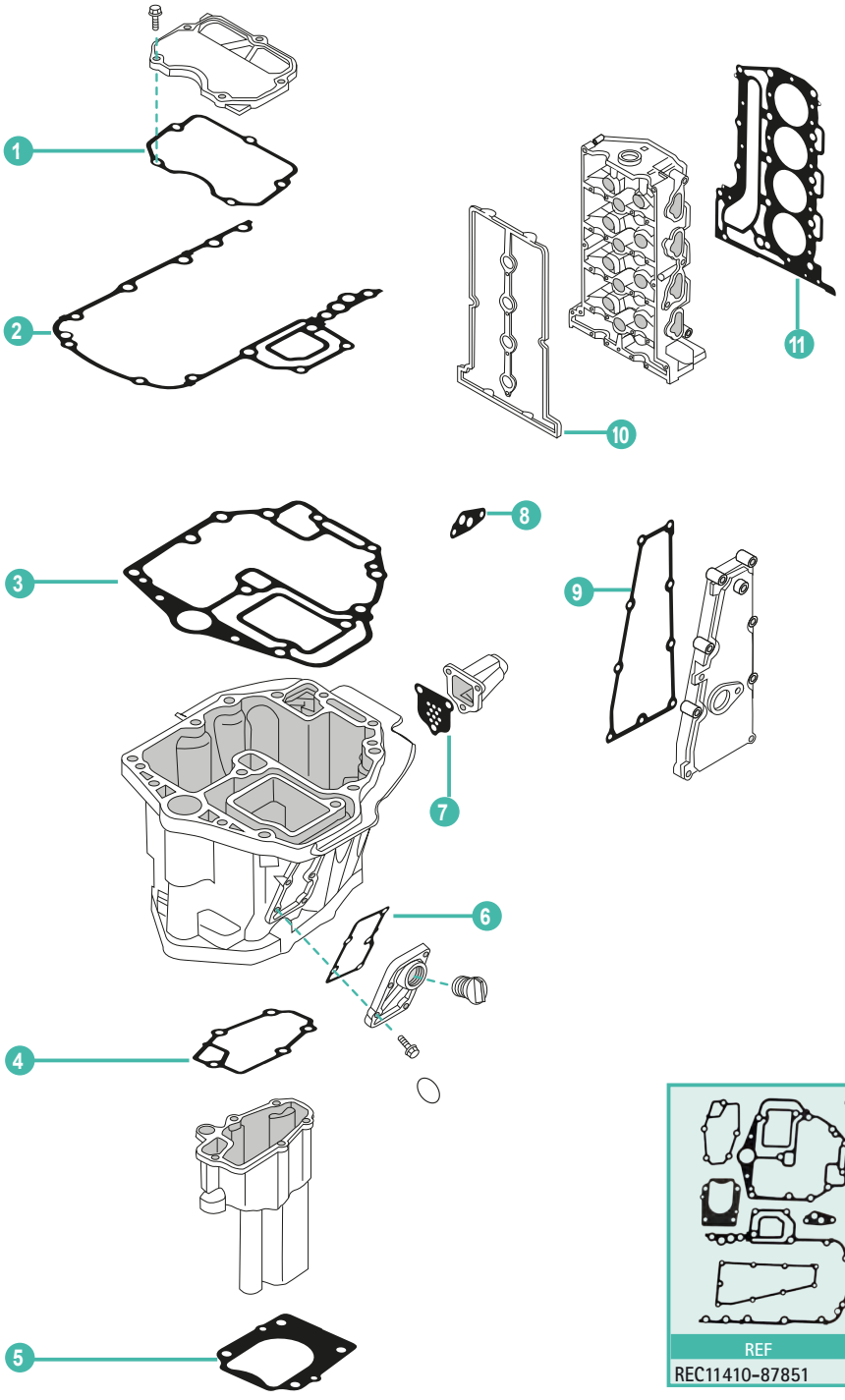

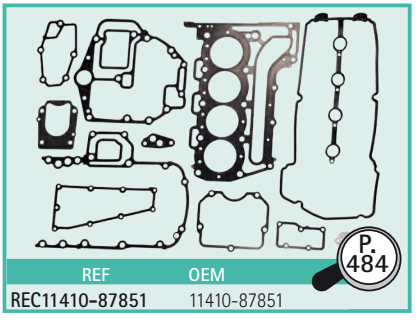

	REF	OEM				
1	REC51123-87L00	51123-87L00	JUNTA DE LA TAPA DE SILEMBLOCK	GASKET, MOUNT CASE COVER	GUARNIZIONE COPERCHIO SILEMBLOCK	JOINT DE COUVERCLE SILEMBLOCK
2	REC51211-87L10	51211-87L00 51211-87L10	JUNTA BASE MOTOR	ENGINE HOLDER GASKET	GUARNIZIONE BASE MOTORE	JOINT BASE MOTEUR
3	REC11489-87L00	11489-87L00	JUNTA CARTER	OIL PAN GASKET	GUARNIZIONE COPPA	JOINT DE CARTER
4	REC52331-87L00	52331-87L00	JUNTA TAPA DE ESCAPE	GASKET EXHAUST COVER	GUARNIZIONE COPERCHIO SCARICO	JOINT DE COUVERCLE D'ECHAPPEMENT
5	REC17472-87L00	17472-87L00	JUNTA BOMBA DE AGUA	WATER PUMP GASKET	GUARZIONE POMPA ACQUA	JOINT DE POMPE À EAU
6	REC52331-87L00	52331-87L00	JUNTA TAPA ESCAPE	GASKET EXHAUST COVER	GUARNIZIONE COPERCHIO SCARICO	JOINT DE COUVERCLE D'ECHAPPEMENT
7	REC11542-87L00	11542-87L00	JUNTA MÚLTIPLE DE ESCAPE	MULTI EXHAUST GASKET	GUARNIZIONE SCARICO MULTIPLO	JOINT DE PIPE D'ECHAPPEMENT
8	REC16539-87L00	16539-87L00	JUNTA ADAPTADOR DE FILTRO	FILTER ADAPTER GASKET	GUARNIZIONE ADATTATORE DE FILTRO	JOINT D'ADAPTATEUR DE FILTRE
9	REC14151-87L00	11151-87L00	JUNTA TAPA ESCAPE	GASKET EXHAUST COVER	GUARNIZIONE COPERCHIO SCARICO	JOINT DE COUVERCLE D'ECHAPPEMENT
10	REC11189-87L00	11189-87L00	JUNTA TAPA DE CULATA	GASKET CYLINDER HEAD COVER	GUARNIZIONE COPERCHIO TESTATA	JOINT DE COUVERTURE DE CULASSE
11	REC11141-87L00	11141-87L00	JUNTA DE CULATA	CYLINDER-HEAD GASKET	GUARNIZIONE TESTATA	JOINT DE CULASSE

ÁRBOL DE LEVAS | CAMSHAFT | ALBERO A CAMME | ARBRE A CAMES

REF	OEM
REC12710-97J00	12710-97J00

DF2.5 (2006+)



new



REF
STA82910

JUNTAS DE MOTOR 4 TIEMPOS | ENGINE GASKET 4 STROKES | GUARNIZIONI MOTORE 4 TEMPI | JOINTS DE MOTEUR 4 TEMPS

4T STROKES

JUNTAS DE CULATA | CYLINDER HEAD GASKET | GUARNIZIONE TESTA | JOINT DE CULASSE

REF	OEM
REC11141-97J02	11141-97JL0 11141-97J01

DF2.5 (2006-15)



REF	OEM
REC11141-91JL0	11141-91JL0 11141-91J01 11141-91J02

DF4, DF5, DF6 (2002-15)



new

REF	OEM
REC11141-93E20	11141-93E20

DF9.9, DF15T-K3 (1996-03)
DF9.9, DF15 (R) (2004-11) MY04



REF	OEM
REC11141-95J00	11141-95J00

DF20, DF25, DF25R V2 (2006-11)



REF	OEM
REC11141-87L00	11141-87L00

DF70A, DF80A, DF90A, DF100B (2009+)

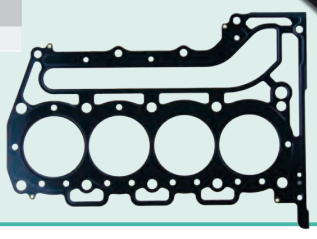

new

REF	OEM
REC11141-87J02	11141-87J00 11141-87J01 11141-87J02

DF40, DF50 (1999-10)

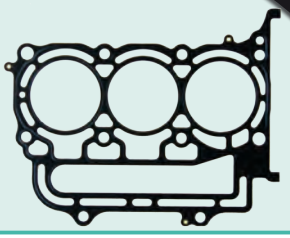

new

REF	OEM
REC11141-90J01	11141-90J00

DF90, DF100, DF115K1-K11 (2001-11)

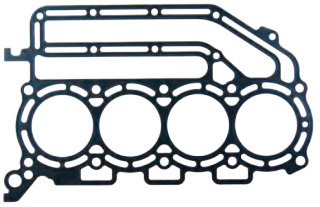

REF	OEM
REC11141-92J01	11141-92J00

DF100A, DF115A, DF140A (2013+)
DF140 (2002-12)

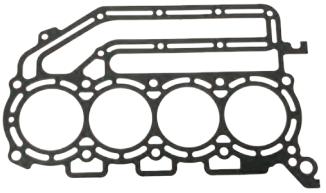

REF	OEM	
REC11142-93J10	11142-93J03	BABOR | PORT | BABORDO | GAUCHE
REC11141-93J10	11141-93J03	ESTRIBOR | STD | TRIBORDO | DROIT

DF200, DF225, DF250 (2004+)



REF	OEM	
REC11142-98J10	11142-98J00	BABOR | PORT | BABORDO | GAUCHE
REC11141-98J10	11141-98J01	ESTRIBOR | STD | TRIBORDO | DROIT

DF300AP (2012)
DF300T-Z (2007-11)

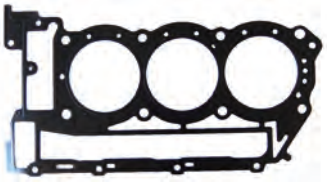

4T STROKES

GUÍA JUNTAS DE CULATA — CYLINDER HEAD GASKET GUIDE — GUIDA GUARNIZIONE TESTA — GUIDE JOINTS DE CULASSE

		REF	RO OEM
DF2.5	2006-15	**REC11141-97J02**	11141-97JL0
DF4, DF5, DF6	2002-15	**REC11141-91JL0**	11141-91JL0 11141-91J01 11141-91J02
DF9.9, DF15 T-K3	1996-03	**REC11141-93E20**	11141-93E20
DF9.9, DF15 R	2004-11	**REC11141-93E20**	11141-93E20
DF20, DF25 R-V2	2006-11	**REC11141-95J00**	11141-95J00
DF40, DF50	1999-10	**REC11141-87J02**	11141-87J00 11141-87J01 11141-87J02
DF70A, DF80A, DF90A, DF100B	2009+	**REC11141-87L00**	11141-87L00

		REF	RO OEM
DF90, DF100, DF115 K1-K11	2001-11	**REC11141-90J01**	11141-90J01
DF100A, DF115A, DF140A	2013	**REC11141-92J01**	11141-92J00
DF140	2002-12	**REC11141-92J01**	11141-92J00
DF200, DF225, DF250 V6 (STB)	2004	**REC11141-93J10**	11141-93J03
DF200, DF225, DF250 V6 (PORT)	2004	**REC11142-93J10**	11142-93J03
DF300 T/Z V6 (STB)	2007-11	**REC11141-98J10**	11141-98J01
DF300 T/Z V6 (PORT)	2007-11	**REC11141-98J10**	11142-98J00
DF300 AP V6 (STB)	2012-12	**REC11141-98J10**	11141-98J01
DF300 AP V6 (PORT)	2012-12	**REC11141-98J10**	11142-98J00

4T STROKES

KITS JUNTAS DE CULATA — CYLINDER HEAD GASKET KIT — KIT GUARNIZIONE TESTA — KITS JOINTS MOTEUR

new

REF	OEM
REC11400-87804	11400-87804 11400-87803 11400-87802 11400-87801 11400-87800

DF40, DF50 (1999-10)

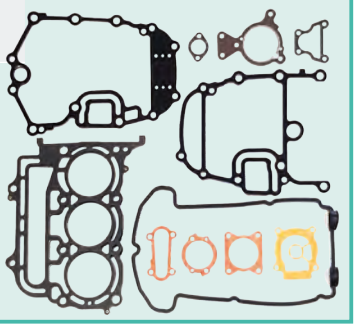

new

REF	OEM
REC11410-87851	11410-87851 11410-87850

DF70A, DF80A, DF90A, DF100B (2009+)

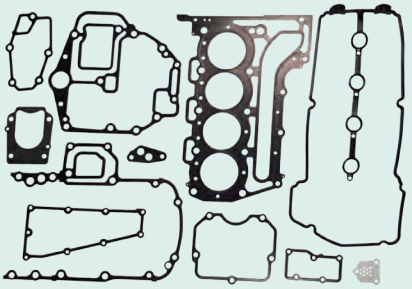

4T STROKES

JUNTAS BASE DE MOTOR — CYLINDER GASKET — GUARNIZIONE BASE MOTORE — JOINTS DE TÊTE MOTRICE

REF	OEM
REC51211-90J10	51211-90J00 51211-90J01 51211-90J02 51211-90J10

DF90, DF100, DF115 K1-K11 (2001-11)
DF140 (2002-12)

Motores antiguos
Old engines
Motore vecchio
Moteurs anciennes

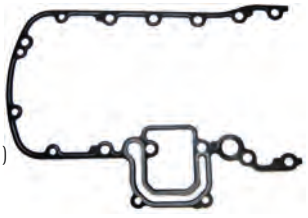

REF	OEM
REC51211-93J00	51211-93J00

DF200, DF225, DF250 (2004-15)
DF300AP (2012)
DF300T/Z (2007-11)



new

REF	OEM
REC51211-90J2	51211-90J21 51211-90J22

DF90, DF100, DF115, DF140
DF100A, DF115A, DF140A (2013+)

Motores modernos
New engines
Motore moderno
Moteurs modernes

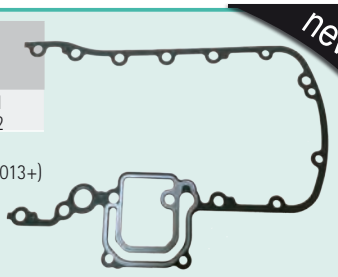

new

REF	OEM
REC51211-87L10	51211-87L00 51211-87L10

DF70A, DF80A, DF90A, DF100B (2009+)

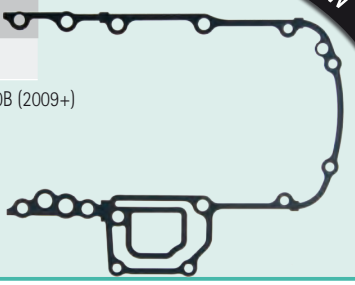

new

REF	OEM
REC51211-87J00	51211-87J00

DF40, DF50 (1999-10)

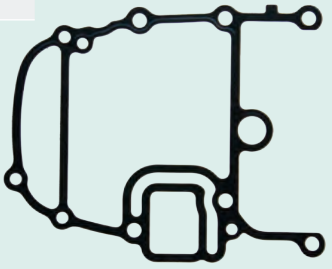

4T STROKES JUNTAS BASE ACEITE — GASKET, UNDER OIL — GUARNIZIONE BASE OLIO — JOINTS BASE D'HUILE

REF	OEM
REC51142-93J00	51142-93J00

DF200, DF225, DF250 (2004+)
DF300AP (2012)
DF300T-Z (2007-11)



4T STROKES JUNTAS BASE RETÉN — GASKET, MOUNT OIL SEAL COVER — GUARNIZIONE BASE PARAOLIO — JOINT DE COUVERCLE

REF	OEM
REC51123-93J00	51123-93J00

DF200, DF225, DF250 (2004+)
DF300AP (2012)
DF300T/Z (2007-11)

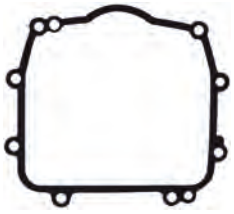

4T STROKES JUNTAS GUÍA CADENA — GASKET, TIMING CHAIN GUIDE BASE — GUARNIZIONE CARTER CATENA GUIDA BASE — JOINT DE GUIDE CHAINE

REF	OEM
REC12778-93J00	12778-93J00

DF200, DF225, DF250 (2004+)
DF300AP (2012)
DF300T/Z (2007-11)



4T STROKES JUNTAS ACEITE — GASKET, OIL GALLERY — GUARNIZIONE OLIO — JOINT D'HUILE

REF	OEM
REC16433-93J00	16433-93J00

DF200, DF225, DF250 (2004+)
DF300AP (2012)
DF300T/Z (2007-11)



REF	OEM
REC17693-95J00	17693-95J00

DF20R, DF25, DF25R V2 (2006-11)



new

REF	OEM
REC11552-87L00	11552-87L00

DF70A, DF80A, DF90A, DF100B (2000+)

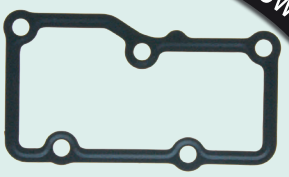

4T STROKES JUNTAS CUERPO DE MARIPOSA — GASKET, THROTTLE BODY — GUARNIZIONE CORPO FARFALLATO — JOINT DE THROTTLE BODY

REF	OEM
REC13421-98J00	13421-98J00

DF300AP (2012)
DF300T/Z (2007-11)



new

REF	OEM
REC13421-87J00	13421-87J00

DF40, DF50

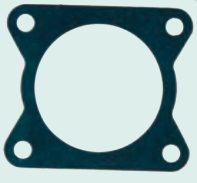

4T STROKES JUNTA TAPA DE FILTRO — GASKET, FILTER COVER — GUARNIZIONE COPERCHIO FILTRO — JOINT COUVERCLE DE FILTRE

new

REF	OEM
REC16539-87L00	16539-87L00

DF70A, DF80A, DF90A, DF100B (2009+)

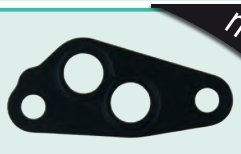

4T STROKES — JUNTA TAPA DE SILEMBLOCK | GASKET, SILEMBLOCK COVER | GUARNIZIONE COPERCHIO SILEMBLOCK | JOINT DE COUVERCLE

new

REF	OEM
REC51123-87L00	51123-87L00

DF70A, DF80A, DF90A, DF100B (2009+)

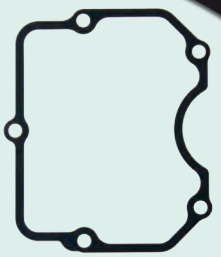

4T STROKES — JUNTA TAPA DE BALANCINES | GASKET, CYLINDER COVER | GUARNIZIONE COPERCHIO PUNTERIE | JOINT DE CACHE CULBUTEUR

new

REF	OEM
REC11189-87L00	11189-87L00

DF70A, DF80A, DF90A, DF100B (2009+)

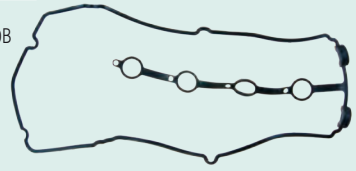

new

REF	OEM
REC11189-87J00	11189-87J00

DF40, DF50 (1999-10)

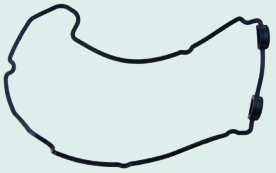

4T STROKES — JUNTA TAPA DE TERMOSTATO | GASKET, THERMOSTAT COVER | GUARNIZIONE COPERCHIO TERMOSTATO | JOINT LOGEMENT THERMOSTAT

new

REF	OEM
REC17685-87D10	17685-87D10 17685-87D00

DF40, DF50 (1999-10)
V6 H-Y (1987-00)



4T STROKES — JUNTA VÁLVULA DE PRESIÓN | GASKET, PRESSURE VALVE | GUARNIZIONE VALVOLA PRESSIONE | JOINT SOUPAPE DE PRESSION

new

REF	OEM
REC17616-87J00	17616-87J00

DF40, DF50 (1999-10)



4T STROKES — JUNTA RETÉN SUPERIOR | GASKET, UPPER SEAL | GUARNIZIONE PARAOLIO SUPERIORE | JOINT D'HUILE SUPERIEUR

new

REF	OEM
REC11413-87J00	11413-87J00

DF40, DF50 (1999-10)



new

REF	OEM
REC11433-87J00	11433-87J00

DF40, DF50 (1999-10)



JUNTAS DE MOTOR 2 TIEMPOS | ENGINE GASKET 2 STROKES | GUARNIZIONI MOTORE 2 TEMPI | JOINTS DE MOTEUR 2 TEMPS

2T STROKES

JUNTAS DE CULATA | CYLINDER HEAD GASKET | GUARNIZIONE TESTA | JOINT DE CULASSE

REF	OEM
REC11141-98401	11141-98401

DT2, DT2.2 G-Y (1686-00)



REF	OEM
REC11141-96344	11141-96344

DT25, DT30 K1-K2 (2001-02)



REF	OEM
REC11141-98130	11141-98130

DT5, DT6, DT8G-Y (1986-00)
DT6, DT8Y-KS (2000-02)



REF	OEM
REC11141-94450	11141-94450

DT40C-W-G-X (1986-99)



REF	OEM
REC11141-93960	11141-93950

DT9.9D, DT15K-G-Y (1986-00)
DT9.9, DT15K1-K4 (2001-04)
DT15C (1989-97)



REF	OEM
REC11141-94720	11141-94701 11141-94720

DT55, DT65J-X (1988-99)



REF	OEM
REC11141-96303	11141-96344

DT20, DT25, DT30G-Y (1986-00)



REF	OEM
REC11141-95505	11141-95505 11141-95621

DT75, DT85J-Y (1988-00)



REF	OEM
REC11141-95D40	11141-95D40

DT25C, DT30C-K-Y (1989-00)



REF	OEM
REC11141-87E90	11141-87D90 11141-87E20

DT25C, DT30C-K-Y (1989-00)



REF	OEM
REC11141-94506	11141-94506 11141-94620

DT115, DT140G-Y (1986-00)
4 In line



REF	OEM
REC11141-87D90	11141-87D90 11141-87D61

150/200 HP (1986)
V6



GUÍA JUNTAS DE CULATA | CYLINDER HEAD GASKET GUIDE | GUIDA GUARNIZIONE TESTA | GUIDE JOINTS DE CULASSE

		REF	RO OEM
DT2.2, DT2.2 G-Y	1986-00	REC11141-98401	11141-98411
DT5, DT6, DT8 G-Y	1986-00	REC11141-98130	11141-98130
DT6, DT8 Y-K2	2000-02	REC11141-98130	11141-98130
DT9.9K, DT15 K-G-Y	1986-00	REC11141-93960	11141-93950
DT9.9, DT15 K1-K4	2001-04	REC11141-93960	11141-93950
DT15C	1989-97	REC11141-93960	11141-93950
DT20, DT25, DT30 G-Y	1986-00	REC11141-96303	11141-96344
DT25, DT30 C-K-Y	1989-00	REC11141-95D40	11141-95D40
DT25, DT30 K1-K2	2001-01	REC11141-96344	11141-96343

		REF	RO OEM
DT40 C-W-G-X	1986-99	REC11141-94450	11141-94440
DT55, DT65 J-X	1988-99	REC11141-94720	11141-94720
DT75, DT85 J-Y	1988-00	REC11141-95505	11141-95621
DT90, DT100 L-Y	1990-00	REC11141-87E90	11141-87E20
DT115, DT140 G-Y	1986-00	REC11141-94506	11141-94620
DT150, DT200, V6	1986-86	REC11141-87D90	11141-87D61
DT150, DT200, DT225 W-K3	1998-03	REC11141-87D92	11141-87D32

2T STROKES — JUNTAS DE CULATÍN | GASKET, HEAD COVER | GUARNIZIONE COPERCHIO TESTA | JOINTS DE COUVRE CULASSE

REF	OEM
REC11162-94410	11162-94410

DT40C-WG-X (1986-99)
DT40W K1-K4 (2001-04)

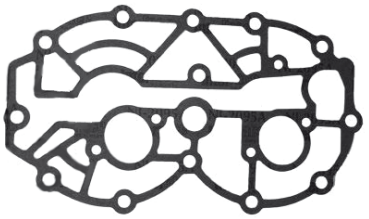

2T STROKES — JUNTAS BASE ACEITE | GASKET, UNDER OIL | GUARNIZIONE BASE OLIO | JOINTS DE TÊTE MOTRICE

REF	OEM
REC11433-93912	11433-93901

DT9.9 , DT15 K1-K4 (2001-04)
DT9.9K, DT15K-G-Y (1986-00)

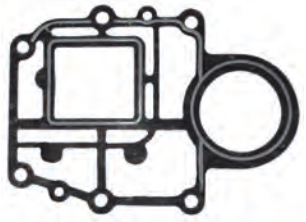

REF	OEM
REC11433-96330	11433-96302

DT20, DT25, DT30G-Y (1986-00)
DT25, DT30 K1-K2 (2001-02)

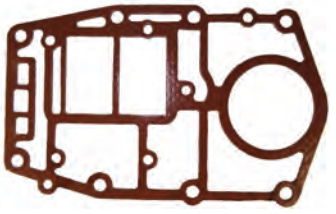

REF	OEM
REC11433-94412	11433-94401

DT40C-W-G-X (1986-00)

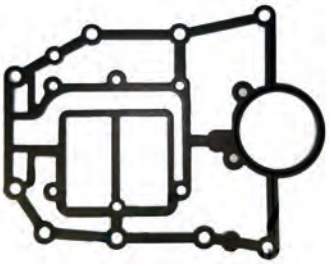

2T STROKES — JUNTA TAPA DE TERMOSTATO | GASKET, THERMOSTAT COVER | GUARNIZIONE COPERCHIO TERMOSTATO | JOINT LOGEMENT THERMOSTAT

new

REF	OEM
REC17685-87D10	17685-87D10 17685-87D00

DT150, DT200, DT225 (1998-03)
DT90, DT100 (1990-00)



RETENES DE ACEITE OIL SEALS | PARAOLIO | JOINT SPI

RETÉN DE ACEITE | OIL SEAL | PARAOLIO | JOINT SPI

REF	OEM	
REC09282-10008	09282-10008	10 x 21 x 4.5 mm

DF2.5 (2006-13)
DF4, DF5, DF6 (2002+)
DT4/J4, DT5Y (1988-02)
DT4K1 (2001)



REF	OEM	
REC09283-17002	09283-17002	17 x 29 x 7 mm

DT2, DT2.2G-Y (1986-00)
DT2.2 K1-K5 (2001-05)



REF	OEM	
REC09282-12008	09282-12008	12 x 24 x 4.5 mm

DF2.5 (2012)
DTK1 (2001)
DF4, DF5, DF6 (2002-12)
DT4, J4, DT5Y (1988-02)
DT8, DT9.9C-J-V (1988-97)



REF	OEM	
REC09283-20018	09283-20018	20 x 37 x 9 mm

DT4K1 (2001)
DT4, J4, DT5Y (1988-02)
DT8, DT9.9C-J-V (1988-97)
DT15C (1989-97)



REF	OEM	
REC09282-12010	09282-12010	12 x 25 x 7 mm

DF9.9, DF15 (R) (2004-12)
DF9.9, DF15T-K3 (1996-03)
DT15C (1989-97)
DT9.9K, DT15K-G-Y (1986-00)
DT9.9, DT15K1-K4 (2001-04)



REF	OEM	
REC09282-15008	09282-15008	14.7 x 25 x 6.5 mm

DF20R, DF25, DF25RVZ (2006-11)
DT20, DT25, DT30G-Y (1986-00)
DT25, DT301-K2 (2001-02)



REF	OEM	
REC09282-17005	09282-17005	17 x 32 x 6 mm

DF40, DF50X-K10 (1999-10)
DF40A, DF50A, DF60A (2010+)
DT40X-W-G-X (1986-99)
DT40W-K1-K4 (2001-04)



REF	OEM	
REC09282-17009	09282-17009	17 x 28 x 6 mm

DF25, DF30W-K6 (2000-06)
DF40, DF50Y-K10 (1999-10)
DT25C, DT30C-K-Y (1989-00)
DT40C-W-G-X (1986-99)
DT40W-K1-K4 (2001-04)
DT55, DT65J-X (1988-99)



REF	OEM	
REC09283-10003	09283-10003	10 x 22 x 6 mm

DT4 J4, DT5Y (1988-02)
DT4K1 (2001)
DT5, DT6, DT8G-Y (1986-00)
DT6, DT8Y-K2 (2000-02)



REF	OEM	
REC09283-10009	09283-10009	10 x 45 x 5 mm

DF4, DF5, DF6 (2002+)



REF	OEM	
REC09283-35043	09283-35043	35 x 55 x 7 mm

DT40C-W-G-X (1986-99)
DT40WK1-K4 (2001-04)
DT55, DT65J-X (1988-99)



REF	OEM	
REC09289-10005	09289-10005	

DT2, DT2.2G-Y (1986-00)
DT2.2 K1-K5 (2001-05)



REF	OEM	
REC09283-30064	09283-30064	30 x 55 x 10 mm

DT20, DT25, DT30G-Y (1986-00)
DT25, DT30K1-K2 (2001-02)



REF	OEM	
REC09283-20045	09283-20045	

DT4 -J4, DT5Y (1988-00)
DT5Y (1998-02)
DT4K1 (2001)



REF	OEM	
REC09283-25035	09283-25035	25 x 40 x 7 mm

DT15C (1989-97)
DT9.9K, DT15K-G-Y (1986-00)
DT9.9, DT15K1-K4 (2001-04)



REF	OEM	
REC09283-25075	09283-25075	25 x 52 x 7 mm

DT9.9K, DT15K-G-Y (1986-00)
DT9.9, DT15K1-K4 (2001-04)



REF	OEM	
REC09283-25076	09283-25075	25 x 45 x 5 mm

DF4, DF5, DF6 (2002+)



REF	OEM	
REC09283-30062	09283-30062	30 x 55 x 8 mm

DT20, DT25, DT30G-Y (1986-00)
DT25, DT30K1-K2 (2001-02)
DT40C-W-G-X (1986-99)
DT40W K1-K4 (2001-04)
DT55, DT65J-X (1988-99)
DT75, DT85J-Y (1988-00)



REF	OEM	
REC09289-12002	09289-12002	12 x 28 x 8 mm

DT2, DT2.2 G-Y (1986-00)
DT2.2 K1-K5 (2001-05)



REF	OEM	
REC09289-17004	09289-17004	17 x 30 x 9 mm

DT20, DT25, DT30G-Y (1986-00)
DT25, DT30K1-K2 (2001-02)



REF	OEM	
REC09289-17006	09289-17006	17 x 30 x 6 mm

DF8A-AR, DF9.9A-AR (2010-12)
DF9.9, DF15(R) (2004-12)
DF9.9, DF15T-K3 (1996-03)
D9.9K, DT15K-G-Y (1986-00)
DT9.9, DT15K1-K4 (2001-04)
DT15C (1989-97)



REF	OEM	
REC09289-20009	09289-20009	20 x 34 x 6,5 mm

DF20R, DF25, DF25RVZ (2006-11)
DF25, DF30Y-K6 (2000-06)
DT20, DT25, DT30G-Y (1986-00)
DT25, DT30K1-K2 (2001-02)
DT25C, DT30C-K-Y (1989-00)



REF	OEM	
REC09289-22007	09289-22007	21.2 x 35 x 5 mm

DF40A, DF50A, DF60A (2010+)
DF40, DF50X-K10 (1999-10)
DT40X-W-G-X (1986-99)
DT40C-W-G-X (1986-99)
DT40W-K1-K4 (2001-04)
DT55, DT65J-X (1988-99)



new

REF	OEM	
REC09289-12003	09289-12003	13 x 26 x 10 mm

DF15 (2012)
DF9.9, DF15T-K3 (1996-03)
DF9.9, DF15(R) (2004-11)
DT15C (1989-97)
DT9.9, DT15 K1-K4 (2001-04)
DT9.9K, DT15K G-Y (1986-00)



REF	OEM	
REC09289-30008	09289-30008	30 x 52 x 10 mm

DT9.9K, DT15K-G-Y (1986-00)
DT9.9, DT15K1-K4 (2001-04)



new

REF	OEM	
REC93101-22067	09282-22007 09282-22004	22 x 36 x 6 mm

DT90, DT100 (1990-00)
DF40A, DF50A, DF60A (2014+)
DF60, DF70 (1998-09)
DF70A, DF80A, DF90A (2009-14)



JUNTA TAPÓN DE DRENAJE — O-RING DRAIN CAP — GUARNIZIONE TAPPO DRENAGIO — JOINT DE VIDANGE

new

REF	OEM	
REC09168-10022	09168-10022	10 x 17 x 1.5 mm

2.5 --> 225 HP



CIGÜEÑAL — CRANKSHAFT — ALBERO MOTORE — VILEBREQUIN

PARTES DE CIGÜEÑAL — CRANKSHAFT PARTS — PARTE ALBERO MOTORE — PARTIES DE VILEBREQUIN

	REF	OEM
1	REC12221-94412	12221-94412
2	REC12231-94413	12231-94413
3	REC12232-94412	12232-94412
4	REC12240-94432	12240-94432

DT40C-W-G-X (1986-99)
DTW-K1-K4 (2001-04)

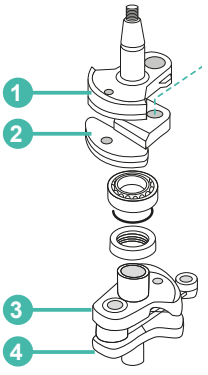



RODAMIENTOS DE CIGÜEÑAL — CRANKSHAFT BEARINGS — CUSCINETTI ALBERO MOTORE — ROULEMENTS VILEBREQUIN

REF	OEM	
REC09262-25078	09262-25078	25 x 25 x 15 mm

DT9.9K, DT15K-G-Y (1986-00)
DT9.9, DT15K1-K4 (2001-04)



REF	OEM	
REC09269-30012	09269-30012	30 x 72 x 19 mm

DT40X-W-G-X (1986-99)
DT40WK1-K4 (2001-04)
DT55, DT65J-X (1988-99)
DT75, DT85J-Y (1988-00)



REF	OEM	
REC09262-30055	09262-30055	30 x 72 x 19 mm

DT20, DT25, DT30G-Y (1986-00)
DT25, DT30K1-K2 (2001-04)
DT75, DT85J-Y (1988-00)



BIELAS | CONNECTING ROD | BIELLA | BIELLE

REF	OEM
REC12161-93902	12161-93902

DT9.9K, DT15K-G-Y (1986-00)
DT9.9, DT15K1-K4 (2001-04)
DT15C (1989-97)



REF	OEM
REC12161-94400	12161-94400

DT40C-W-G-Y (1986-99)
DT40W K1-K4 (2001-04)
DT55, DT65J-X (1988-99)



REF	OEM
REC12161-96300	12161-96300

DT20, DT25, DT30G-Y (1986-00)
DT25, DT30K1-K2 (2001-02)



ARANDELAS DE BIELA | CONNECTING ROD, THRUST WASHER | RONDELLE BIELLA | RONDELLE DE BIELLE

REF	OEM
REC09160-27008	09160-27008

DT35 (1987-89)
DT40 (1986-98)
DT55 (1985-97)
DT65 (1985-97)



REF	OEM
REC09181-24001	09181-24001

DT20, DT25, DT30G-Y (1986-00)
DT25, DT30K1-K2 (2001-02)



REF	OEM
REC09160-20052	09160-20052

DT15C (1989-97)
DT9.9, DT15K1-K4 (2001-04)
DT9.9K, DT15K-G-Y (1986-00)



COJINETES DE BIELA | CONNECTING ROD, BEARINGS | CUSCINETTI BIELLA | ROULEMENTS DE BIELLE

1 REF	OEM
REC09263-14022	09263-14022

DT9.9K, DT15K G-Y (1986-00)
DT9.9, DT15K1-K4 (2001-04)



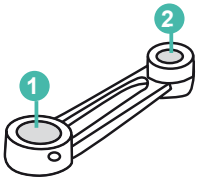

1 REF	OEM
REC09263-18016	09263-14022

DT25 (1983-88)
DT30 (1983-88)



2 REF	OEM
REC09263-20051	09263-20051

DT15C (1989-97)
DT9.9, DT15K1-K4 (2001-04)
DT9.9K, DT15K-G-Y (1986-00)



1 REF	OEM
REC09263-20072	09263-20072

DT40C-W-G-X (1986-99)
DT40W K1-K4 (2001-04)
DT55, DT65J-X (1988-99)
DT90, DT100L-Y (1990-00)



2 REF	OEM
REC09263-27005	09263-27005

DT40C-W-G-X (1986-99)
DT40W K1-K4 (2001-04)
DT55, DT65J-X (1988-99)



1 REF	OEM
REC09263-24018	09263-24018

DF20 (1986-88)
DT25 (1983-88)
DT30 (1983-85)
DT40 (1984-85)
DT50 (1984+)





PISTONES PISTONS PISTONI PISTONS

KITS DE PISTONES — PISTON KITS — KIT PISTONE — KIT PISTON

	STD REF	OEM
	REC12110-93130K	12110-93130
	REC12140-93121	12140-93121
	REC09263-14022	09263-14014

DT9.9, DT15K-G-Y (1986-00)
DT9.9, DT15K1-K4 (2001-04)



	STD REF	OEM
	REC12110-94350K	12110-94350

DT35 (1980-82)
DT40 (1980-82)



	STD REF	OEM
	REC12110-94400K	12110-94400K
	REC12140-94400	12140-94400
	REC09263-20072	09263-20072

DT40C-W-G-X (1986-99)
DT40W-K1-K4 (2001-04)



GUÍA CORREAS DE DISTRIBUCIÓN — GUIDE TIMIMG BELT — GUIDA CINGHIE DISTRIBUZIONE — GUIDE DES COURROIES DE DISTRIBUTION

			REF	OEM
DF8A, DF8AR, DF9.9A, DF9.9AR	2010+	66	REC12761-99J00	12761-99J00
DF15	2012	69	REC12761-93EL0	12761-93EL0
DF9.9, DF15T-K3	1996-03	69	REC12761-93EL0	12761-93EL0
DF9.9, DF15 R	2004-11	69	REC12761-93EL0	12761-93EL0
DF9.9B, DF15A	2013+	69	REC12761-93EL0	12761-93EL0
DF60, DF70 W-K9	1998-09	89	REC12761-72F00	12761-72F00



SISTEMA DE ESCAPE Y ADMISIÓN
EXHAUST & INTAKE SYSTEM
SISTEMA DI SCARICO E ASPIRAZIONE
SYSTÈME D'ECHAPPEMENT ET D'ADMISSION

SISTEMA DE ESCAPE 4 TIEMPOS	EXHAUST SYSTEM 4 STROKES	SISTEMA SCARICO 4 TEMPI	SYSTÈME D'ECHAPPEMENT 4 TEMPS

4T STROKES

JUNTAS COLECTOR — GASKET, COLLECTOR — GUARNIZIONE COLLETTORE — JOINT DE COLLECTEUR

REF	OEM
REC13147-98J00	13147-98J00

DF300AP (2012)
DF300T/Z (2007-11)

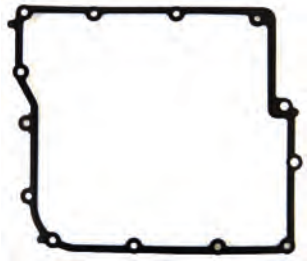

4T STROKES

JUNTAS CARTER — OIL PAN GASKET — GUARNIZIONE CARTER — JOINTS DE CARTER

REF	OEM
REC11489-90J00	11489-90J00

DF90, DF100, DF115 K1-K11 (2001-11)
DF140 (2002-12)
DF115WT, DF140WT-K3 (2003)
DF100A, DF115A 7, DF140 (2013+)

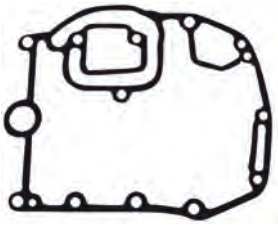

REF	OEM
REC11489-93E11	11489-93E10

DF9.9, DF15 (R) (2004-11)
DF15 (2012)

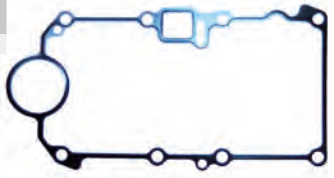

REF	OEM
REC11489-93J00	11489-93J00

DF200, DF225, DF250 (2004+)
DF300AP (2012)
DF300T-Z (2007-11)

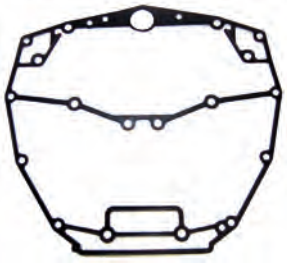

new

REF	OEM
REC11489-87L00	11489-87L00

DF70A, DF80A, DF90A, DF100B (2009+)

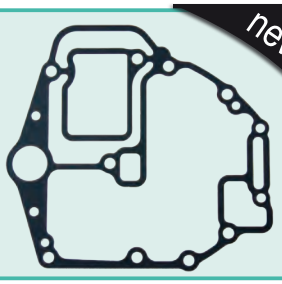

new

REF	OEM
REC11489-87J00	11489-87J00

DF40, DF50 (1999-10)

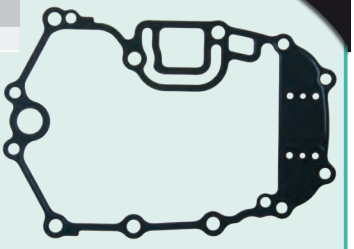

4T STROKES

JUNTA MÚLTIPLE DE ESCAPE — MULTI EXHAUST GASKET — GUARNIZIONE SCARICO MULTIPLO — JOINT DE PIPE D'ECHAPPEMENT

new

REF	OEM
REC11542-87L00	11542-87L00

DF70A, DF80A, DF90A, DF100B (2009+)



SISTEMA DE ADMISIÓN 4 TIEMPOS | INTAKE SYSTEM 4 STROKES | SISTEMA ASPIRAZIONE 4 TEMPI | SYSTÈME D'ADMISSION 4 TEMPS

4T STROKES — JUNTAS COLECTOR | GASKET, COLLECTOR | GUARNIZIONE COLLETTORE | JOINT DE COLLECTEUR

REF	OEM
REC13122-95J00	13122-95J00

DF20R, DF25, DF25R V2 (2006 -11)



REF	OEM
REC13119-93J00	13119-93J00

DF200, DF225, DF250 (2004+)



4T STROKES — JUNTA TAPA ESCAPE | GASKET EXHAUST COVER | GUARNIZIONE COPERCHIO SCARICO | JOINT DE COUVERCLE D'ECHAPPEMENT

REF	OEM
REC14212-93J00	14212-93J00

DF200, DF225, DF250 (2004+)
DF300AP (2012)
DF300T/Z (2007-11)

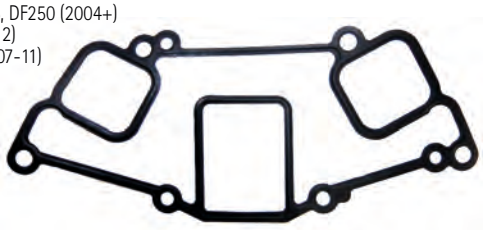

REF	OEM
REC52331-87L00	52331-87L00

DF70A, DF80A, DF90A (2009+)



REF	OEM	
REC14152-93J00	14152-93J00	BABOR | PORT | BABORDO | GAUCHE
REC14151-93J00	14151-93J00	ESTRIBOR | STD | TRIBORDO | DROIT

DF200, DF225, DF250 (2004+)
DF300AP (2015)
DF300T/Z (2007-11)



REC14151-93J00

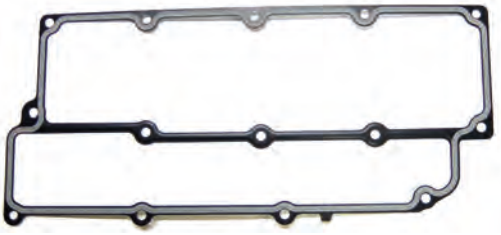

REC14152-93J00

new

REF	OEM
REC14151-87L00	14151-87L00

DF70A, DF80A, DF90A, DF100B (2009+)

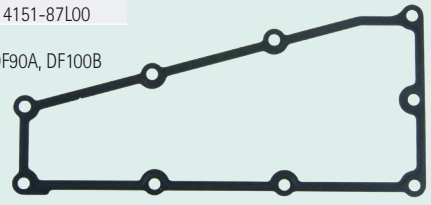

2T STROKES

JUNTAS DE ESCAPE | GASKET, EXHAUST | GUARNIZIONE SCARICO | JOINTS D'ECHAPPEMENT

REF	OEM
REC14212-94413	14212-94412

DT40C-W-G-X (1986-99)



REF	OEM
REC52113-93910	52113-93901

DT9.9, DT15 K1-K4 (2001-04)
DT9.9K, DT15K-G-Y (1986-00)

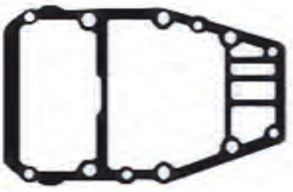

REF	OEM
REC52113-96330	52113-96304

DT20, DT25, DT30G-Y (1986-00)
DT25, DT30K1-K4 (2001-02)

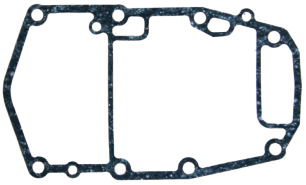

REF	OEM
REC14151-96311	14151-96310

DT20, DT25, DT30G-Y (1986-00)
DT25, DT30 K1-K2 (2001-02)

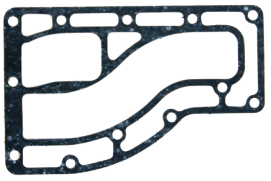

REF	OEM
REC14151-93912	14151-93901

DT9.9, DT15 K1-K4 (2001-04)
DT9.9K, DT15K-G-Y (1986-00)

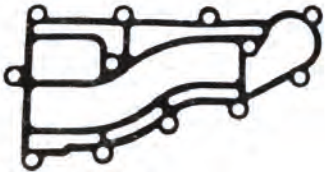

REF	OEM
REC11434-94411	11434-94411

DT40C-W-G-X (1986-99)
DT40W K1-K4 (2001-04)

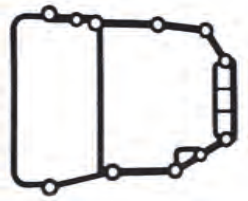

REF	OEM
REC14151-94411	14151-94412

DT40C-W-G-X (1986-99)
DT40W K1-K4 (2001-04)

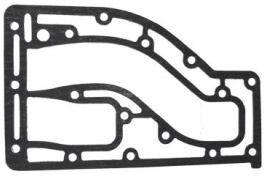

2T STROKES

JUNTAS TAPA DE ESCAPE | GASKET, EXHAUST COVER | GUARNIZIONE COPERTURA SCARICO | JOINTS DE PLAQUE D'ECHAPPEMENT

REF	OEM
REC14141-93952-0EP	14141-93952-0EP

DT9.9, DT15 K1-K4 (2001-04)
DT9.9K, DT15K G-Y (1986-00)

new

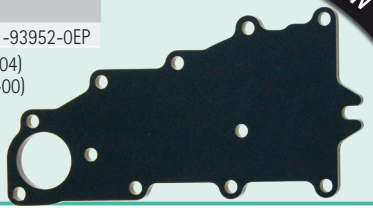

2T STROKES

JUNTAS TUBO DE ESCAPE | GASKET, EXHAUST TUBE | GUARNIZIONE TUBO DI SCARICO | JOINT TUBE D'ECHAPPEMENT

REF	OEM
REC14212-91L00	14212-91L00 14212-96310

DT20, DT25, DT30 G-Y (1986-00)
DT25, DT30 K1-K2 (2001-02)

new

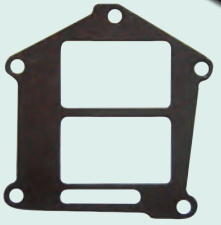

DESPIECE COLAS 4 TIEMPOS | GEAR CASE PARTS 4 STROKES | PARTI PIEDI DE 4 TEMPI | PIECES D'EMBASES 4 TEMPS

4T STROKES DF4, DF5, DF6

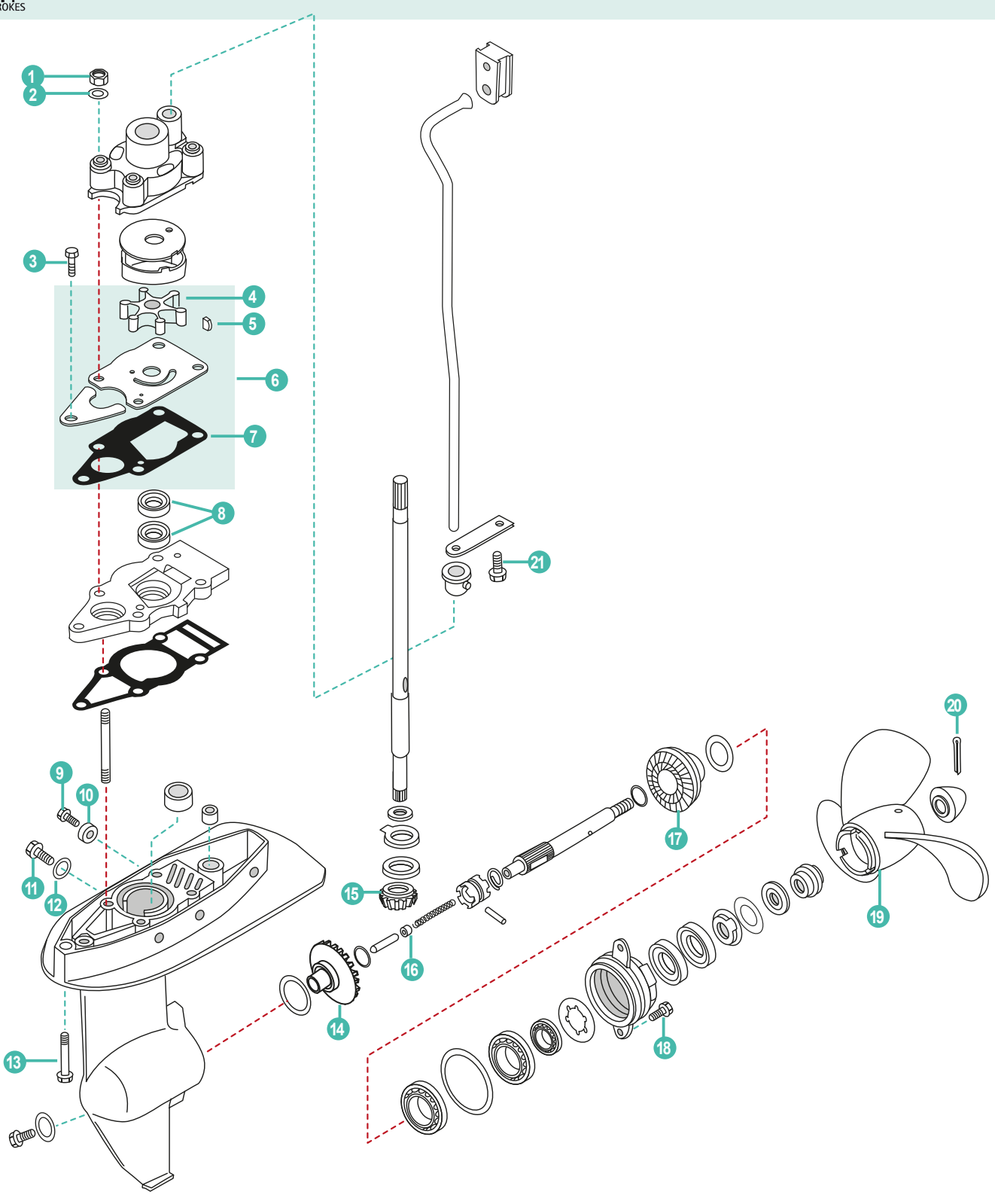

	REF	OEM				
1	PAGB/T6170-M6	29141-93J00	TUERCA HEXÁGONO M6	NUT HEXAGON M6	DADO ESAGONALE M6	ECROU HEXAGONAL M6
2	PAGB/T848-6	09160-06082	ARANDELA	WASHER	RONDELLA	RONDELLE
3	PAGB/T5283-M6X25	09116-06229	TORNILLO HEXAGONAL M6x25	HEXAGON BOLT M6x25	BULLONE ESAGONALE M6x25	BOULON HEXAGONAL M6x25
4	REC17461-98503	17461-985M0	IMPULSOR	IMPELLER	GIRANTE	TURBINE
5	REC09420-03002	09420-03002	CHAVETA IMPELLER	KEY	CHIUSURA	CLAVETTE TURBINE
6	REC17400-98661	17400-98661	KIT BOMBA AGUA	WATER PUMP KIT	KIT POMPA ACQUA	KIT POMPE À EAU
7	REC17472-91J00	17472-91J00	JUNTA DE LA BOMBA	GASKET PUMPCASE	GUARNIZIONE POMPA	JOINT DE POMPE
8	REC09282-10008	09282-10008	RETÉN ACEITE	OIL SEAL	PARAOLIO	JOINT SPI
9	PAGB/T5783-M6X14	09103-06281	TORNILLO HEXAGONAL M6x14	HEXAGON BOLT M6x14	BULLONE ESAGONALE M6x14	BOULON HEXAGONAL M6x14
10	CM55321-87J00	55321-87J00	ÁNODO	ANODE	ANODO	ANODE
11	REC09248-10008	09248-10008	TORNILLO 10x7,5	SCREW 10x7,5	VITE 10x7,5	VIS 10x7,5
12	REC09168-10022	09168-10022	ARANDELA TAPÓN	CAP, O-RING	RONDELLA TAPPO	JOINT DE VIDANGE
13	PAGB/T5787-1986	09116-08156	TORNILLO HEXAGONAL M8x50	HEXAGON BOLT M8x50	BULLONE ESAGONALE M8x50	BOULON HEXAGONAL M8x50
14	REC57510-91J00	57510-91J00	PIÑON MARCHA AVANTE	FORWARD GEAR	INGRANAGGIO MARCIA AVANTI	PIGNON MARCHE AV
15	REC57311-98600	57311-91J00	PIÑON ATAQUE	INITIATIVE GEAR	PIGNONE	PIGNON D'ATTAQUE
16	REC57632-97L00	57632-98501	PIN SELECTOR	SELECTOR PIN	PIN SELETTORE	CLAVETTE
17	REC57521-91J00	57521-91J00	PIÑON MARCHA ATRÁS	RESERVE GEAR	PIGNONE MARCIA INDIETRO	PIGNON MARCHE AR
18	PAGB/T5783-M6X16	09116-06225	TORNILLO HEXAGONAL M6x16	HEXAGON BOLT M6x16	BULLONE ESAGONALE M6x16	BOULON HEXAGONAL M6x16
19	SOL4011-079-07S	58110-91JN0-019	HÉLICE AMITA 3 7.9x6.75	PROPELLER AMITA 3 7.9x6.75	ELICA AMITA 3 7.9x6.75	HELICE AMITA 3 7.9x6.75
20	REC91490-40030	09204-03003	PASADOR	PIN	FERMO	GOUPILLE
21	PAGB/T5783-M6X16	09116-06225	TORNILLO HEXAGONAL M6x16	HEXAGON BOLT M6x16	BULLONE ESAGONALE M6x16	BOULON HEXAGONAL M6x16



REC80W90U3
REC80W90U6
RECGREU1
RECGREU12

P. 43

4T STROKES DF8A/AR, DF9.9A/AR, DF9.9B, DF15A, DF20A

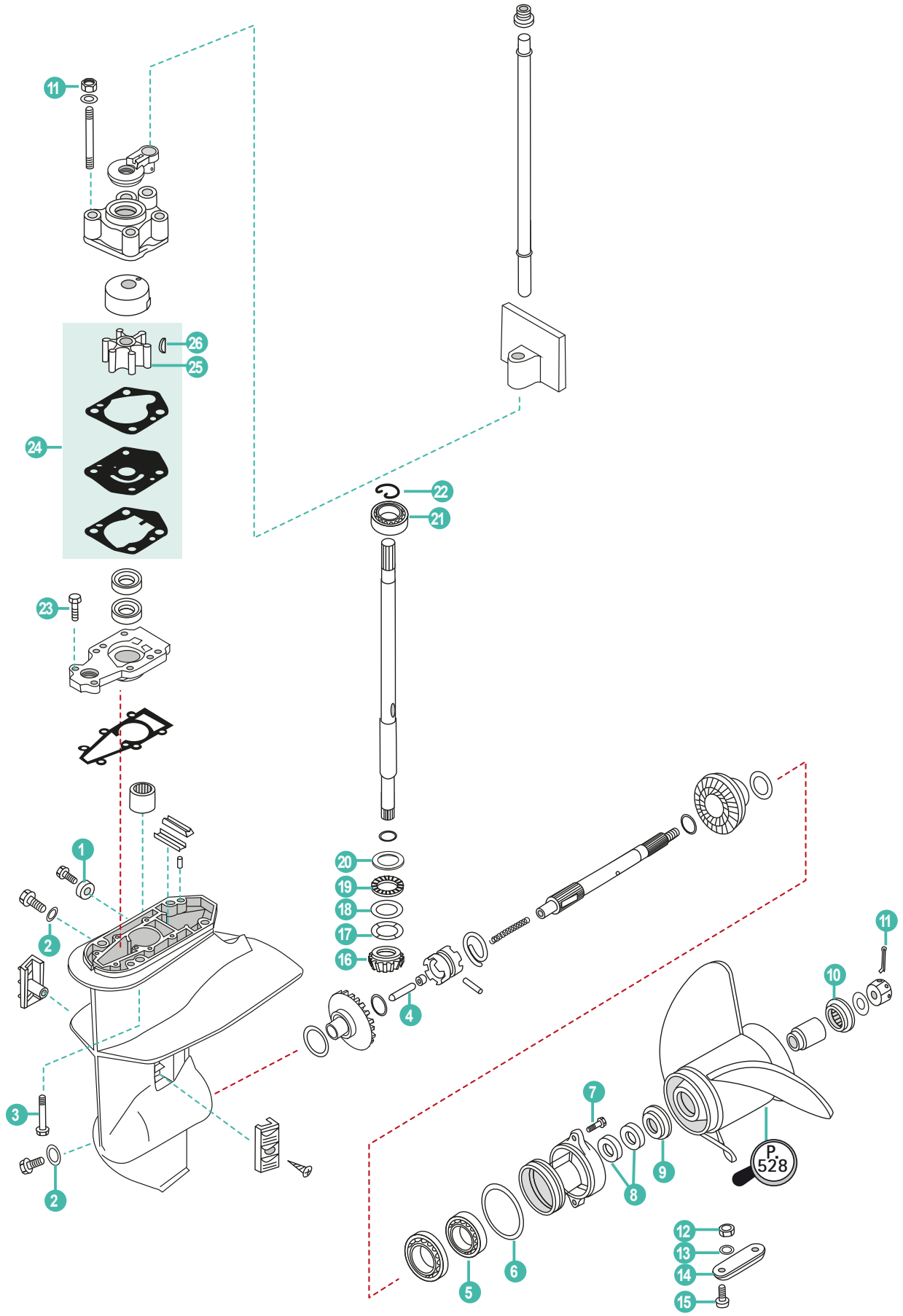

	REF	OEM				
1	CM55321-87J00	55321-87J01	ÁNODO	ANODE	ANODO	ANODE
2	REC59178-97J00	59178-97J00	JUNTA DRENAJE COLA	DRAIN PLUG GASKET	GUARNIZIONE DRENAGGIO	JOINT DE VIDANGE
3	PAGB/T5783-M8X30	09116-08151	PERNO M8x30	BOLT M8x30	BULLONE M8x30	BOULON M8x30
4	REC57631-93901	57631-93901	VARILLA SELECTOR	ROD PUSH	ASTA SELETTORE	CLAVETTE
5	REC08110-60050	08110-60050	RODAMIENTO	BEARING	CUSCINETTO	ROULEMENT
6	REC09280-57002	09280-57002	ARO TORICO	O-RING	O-RING	JOINT TORIQUE
7	PAGB/T5787-M6X20	09116-06227	TORNILLO	BOLT, FLANGE	VITE	VIS DE BRIDE
8	REC09289-17006	09289-17L02	RETÉN ACEITE	OIL SEAL	PARAOLIO	JOINT SPI
9	REC57632-94J00	57632-94J00	SEPARADOR HELICE	PROPELLER WASHER	DISTANZIALE ELICA	RONDELLE HÉLICE
10	REC57633-93901	57633-93901	SEPARADOR	SPACER	DISTANZIALE	ENTRETOISE
11	REC09204-02004	09204-02004	PIN BLOQUEADOR	COTTER PIN	COPPIGLIA	GOUPILLE
12	PAGB/T6170-M6	29141-93J00	TUERCA HEXÁGONO M6	NUT HEXAGON M6	DADO ESAGONALE M6	ECROU HEXAGONAL M6
13	PAGB/T93-6	29162-93J00	ARANDELA MUELLE 6	WASHER SPRING 6	RONDELLA MOLLA 6	RESSORT 6
14	CM55300-95500	55300-95500	ÁNODO	ANODE	ANODO	ANODE
15	PAGB/T820-M6X20	09126-06006	TORNILLO M6x20	SCREW M6x20	VITE M6x20	VIS M6x20
16	REC57311-99J10	57311-99J10	PIÑON ATAQUE	INITIATIVE GEAR	PIGNONE	PIGNON D'ATTAQUE
	REC09160-20042	09160-20042	GRUESO 1.10	SHIM 1.10	SPESSORE 1.10	CALE 1.10
17	REC09160-20043	09160-20043	GRUESO 1.20	SHIM 1.20	SPESSORE 1.20	CALE 1.20
	REC09160-20044	09160-20044	GRUESO 1.30	SHIM 1.30	SPESSORE 1.30	CALE 1.30
18	REC09160-20027	09160-20027	ARANDELA PIÑON	WASHER GEAR	RONDELLA PIGNONE	RONDELLE DE PIGNON
19	REC09263-20L04	09263-20024	RODAMIENTO	BEARING	CUSCINETTO	ROUEMENT
20	REC09160-21009	09160-21009	ARANDELA PIÑON	WASHER GEAR	RONDELLA PIGNONE	RONDELLE DE PIGNON
21	REC08110-60020	08110-60020	RODAMIENTO	BEARING	CUSCINETTO	ROULEMENT
22	REC09380-15001	09380-15001	CIRCLIP	CLIP	CERCLIP	CLIPS
23	REC09116-06121	09116-06229	TORNILLO	BOLT	VITE	VIS
24	REC17400-99J01	17400-99J01	KIT BOMBA	PUMP KIT	KIT POMPA	KIT POMPA À EAU
25	REC17461-93903	17461-939M0	IMPULSOR	IMPELLER	GIRANTE	TURBINE
26	REC09420-03005	09420-03009	CHAVETA	KEY	CHIAVETTA	CLAVETTE



REC80W90U3
REC80W90U6
RECGREU1
RECGREU12

P. 43



REF	OEM
REC17400-99J01	17400-99J01

P. 475

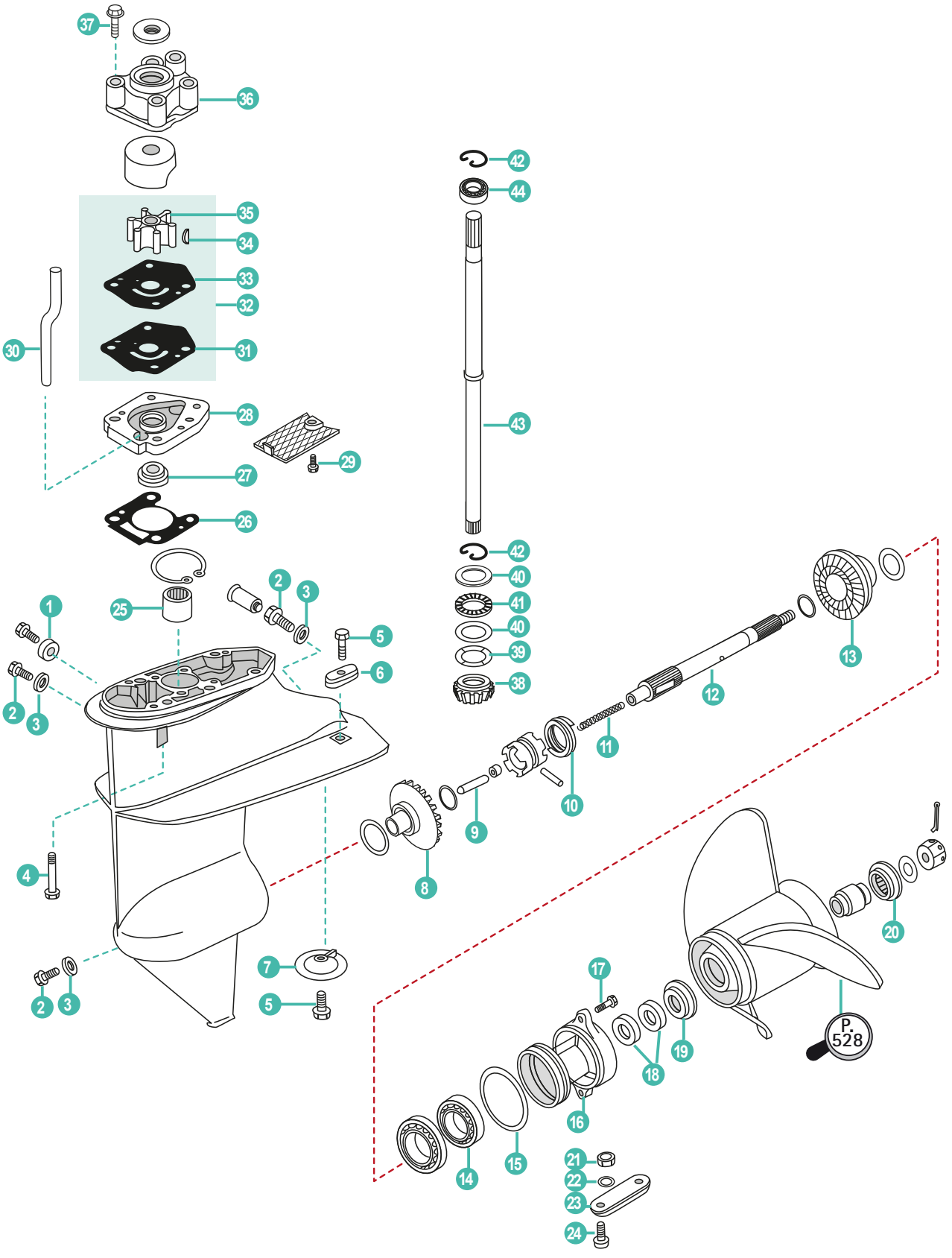
37
36
35
34
33
32
31
30
28
29
27
26
25
42
44
43
42
40
41
40
39
38
1
2
3
5
6
2
3
4
2
3
7
5
8
9
10
11
12
13
20
17
18
19
16
15
14
21
22
23
24
P. 528

	REF	OEM				
1	CM55321-87J00	55321-87J00	ÁNODO	ANODE	ANODO	ANODE
2	REC09248-10008	09248-10008	TORNILLO 10x7,5	SCREW 10x7,5	VITE 10x7,5	VIS 10x7,5
3	REC09168-10022	09168-10022	ARANDELA TAPÓN	CAP, O-RING	RONDELLA TAPPO	JOINT DE VIDANGE
4	PAGB/T5783-M8X30	09117-08047	TORNILLO M8X30	BOLT M8X30	BULLONE M8X30	BOULON M8X30
5	REC09116-06094	09116-06094	TORNILLO 6x15	SCREW 6x15	VITE 6x15	VIS 6x15
6	CM41811-98500	41811-98500	ÁNODO	ANODE	ANODO	ANODE
7	CM55321-93900	55321-93900	ÁNODO	ANODE	ANODO	ANODE
8	REC57510-93910	57510-93910	PIÑON MARCHA AVANTE	FORWARD GEAR	INGRANAGGIO MARCIA AVANTI	PIGNON MARCHE AVANT
9	REC57631-93901	67631-93901	VARILLA SELECTOR	ROD PUSH	ASTA SELETTORE	CLAVETTE
10	REC09440-32008	09440-32008	MUELLE	CLUTCH	MOLLA	RESSORT
11	REC09440-05027	09440-05027	MUELLE SELECTOR	SELECTOR SPRING	MOLLA SELETTORE	RESSORT DE SELECTEUR
12	REC57610-93901	57610-93901	EJE HELICE	PROPELLER SHAFT	ASSE ELICA	ARBRE D'HELICE
13	REC57521-93910	57521-93910	PIÑÓN MARCHA ATRÁS	REVERSER GEAR	INGRANNAGGIO MARCIA INDIETRO	PIGNON MARCHE ARRIÈRE
14	REC08110-60050	08110-60050	RODAMIENTO	BEARING	CUSCINETTO	ROULEMENT
15	REC09280-57002	09280-57002	ARO TORICO	O-RING	O-RING	JOINT TORIQUE
16	REC56120-93900	56120-93901-0EP	DIÁBOLO	CARRIER	DIAVOLO	DIABOLO
17	PAGB/T5787-M6X20	29116-93J00	TORNILLO	BOLT, FLANGE	VITE	VIS DE BRIDE
18	REC09289-17006	09289-17006	RETÉN ACEITE	OIL SEAL	PARAOLIO	JOINT SPI
19	REC57632-94J00	57632-93902	SEPARADOR HÉLICE	PROPELLER WASHER	DISTANZIALE ELICA	RONDELLE HÉLICE
20	REC57633-93901	57633-93901	SEPARADOR	SPACER	DISTANZIALE	ENTRETOISE
21	PAGB/T6170-M6	29141-93J00	TUERCA HEXÁGONAL M6	HEXAGON NUT M6	DADO ESAGONALE M6	ECROU HEXAGONAL M6
22	PAGB/T93-6	29162-93J00	ARANDELA MUELLE 6	SPRING WASHER 6	RONDELLA MOLLA 6	RESSORT RONDELLE 6
23	CM55300-95500	55300-95500	ÁNODO	ANODE	ANODO	ANODE
24	PAGB/T820-M6X20	09126-06006	TORNILLO M6x20	SCREW M6x20	VITE M6x20	VIS M6X20
25	REC09263-15019	09263-15019	RODAMIENTO	BEARING	CUSCINETTO	ROULEMENT
26	REC17452-93910	17452-93910	JUNTA COLA	DRIVE GASKET	GUARNIZIONE PIEDE	JOINT D'EMBASE
27	REC09289-12003	09289-12003	RETÉN	OIL SEAL	PARAOLIO	JOINT SPI
28	REC17450-93921	17450-93921	CARCASA BOMBA AGUA	PUMP BASE	BASE POMPA ACQUA	CORPS DE POMPE À EAU
29	PAGB/T818-M6X10	09125-06063	TORNILLO M6x10	BOLT M6x10	BULLONE M6x10	BOULON M6x10
30	REC17453-93901	17453-93900	TUBO VACIADO DE AGUA	WATER TUBE	TUBO ACQUA	TUBE VIDANGE D'EAU
31	REC17472-93911	17472-93911	JUNTA BOMBA AGUA	WATER PUMP GASKET	GUARNIZIONE POMPA ACQUA	JOINT DE POMPE À EAU
32	REC17400-93951	17400-93951	KIT BOMBA AGUA	WATER PUMP SERVICE KIT	KIT POMPA ACQUA	KIT POMPE À EAU
33	REC17471-93902	17471-93902	BASE BOMBA AGUA	WATER PUMP PLATE	COPERCHIO GIRANTE	BASE DE POMPE À EAU
34	REC17462-93990	17462-93990	CHAVETA	KEY	CHIAVETTA	CLAVETTE
35	REC17461-93903	17461-93903	IMPULSOR	IMPELLER	GIRANTE	TURBINE
36	REC17411-93901	17411-93901	CUERPO BOMBA AGUA	HOUSING WATER PUMP	CORPO POMPA ACQUA	CORPS DE POMPE À EAU
37	PAGB/T5783-M8X55	09116-08117	TORNILLO HEXAGONAL M8x55	BOLT HEXAGON M8x55	BULLONE ESAGONALE M8x55	VIS HEXAGONAL M8x55
38	REC57311-93910	57311-93910	PIÑON ATAQUE	INITIATIVE GEAR	PIGNONE ATTACCO	PIGNON D'ATTAQUE
39	REC09160-20041	09160-20041	GRUESO 1.00	SHIM 1.00	SPESSORE 1.00	CALE 1.00
	REC09160-20042	09160-20042	GRUESO 1.10	SHIM 1.10	SPESSORE 1.10	CALE 1.10
	REC09160-20043	09160-20043	GRUESO 1.20	SHIM 1.20	SPESSORE 1.20	CALE 1.20
	REC09160-20044	09160-20044	GRUESO 1.30	SHIM 1.30	SPESSORE 1.30	CALE 1.30
40	REC09160-21009	09160-21009	ARANDELA PIÑÓN	WASHER GEAR	RONDELLA PIGNONE	RONDELLE DE PIGNON
41	REC09263-20L04	09263-20L04	RODAMIENTO	BEARING	CUSCINETTO	ROULEMENT
42	REC09380-15001	09380-15001	CIRCLIP	CLIP	CERCLIP	CLIPS
43	REC57100-93902	57100-93902	EJE VERTICAL	DRIVE SHAFT	ASSE VERTICALE	ARBRE DE TRANSMISSION
44	REC08110-60020	08110-60020	RODAMIENTO	BEARING	CUSCINETTO	ROULEMENT



REC80W90U3
REC80W90U6
RECGREU1
RECGREU12

P. 43

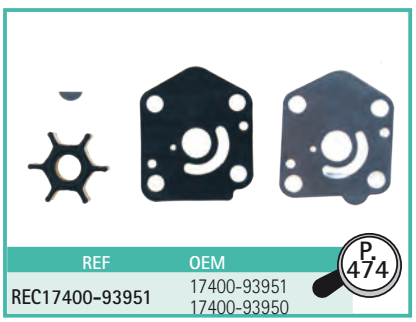

REF	OEM
REC17400-93951	17400-93951 17400-93950

P. 474

4T STROKES DF9.9B, DF15A, DF20A

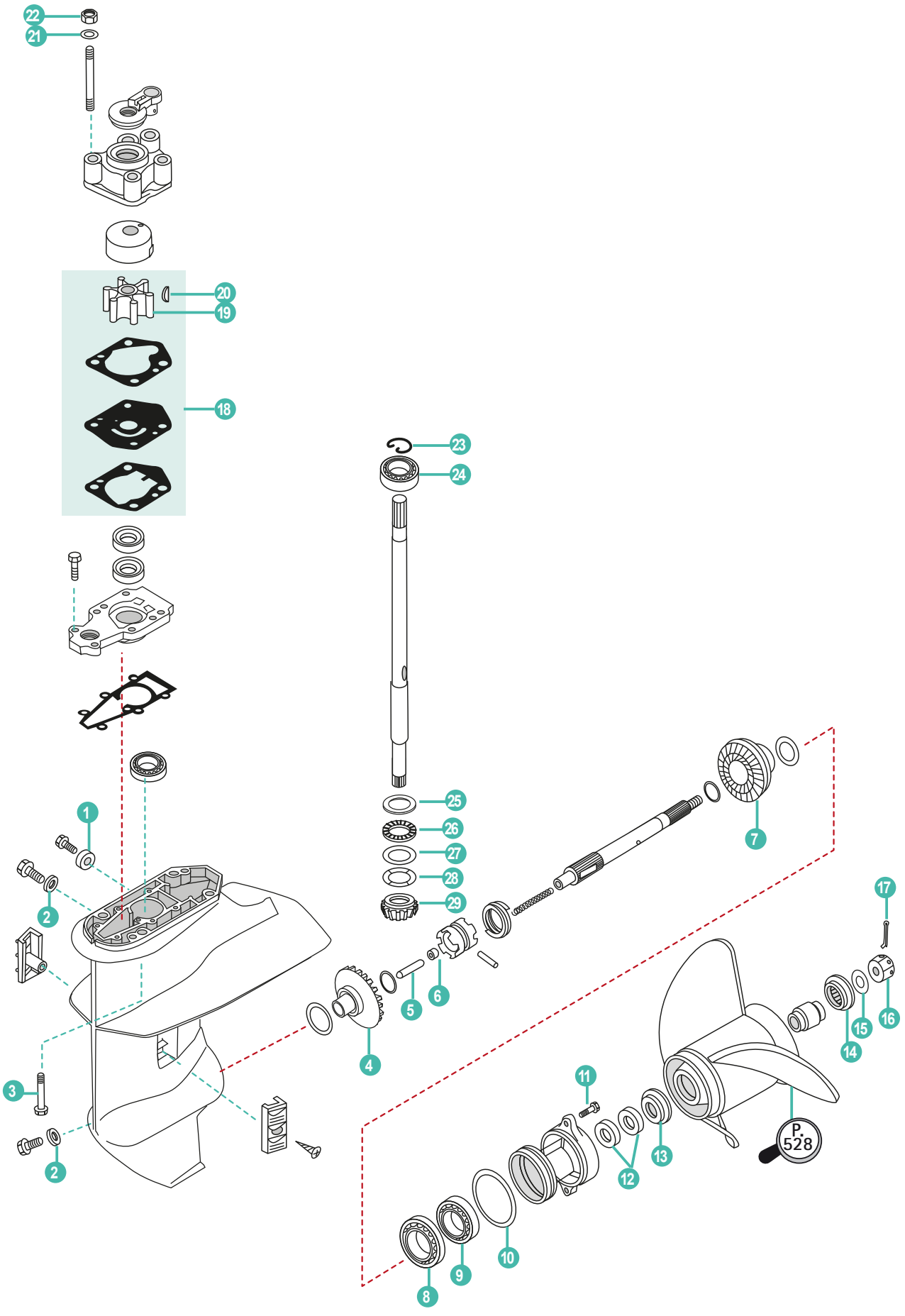

	REF	OEM				
1	CM55321-87J00	55321-87J01	ÁNODO	ANODE	ANODO	ANODE
2	REC59178-97J00	59178-97J00	JUNTA DRENAJE COLA	DRAIN PLUG GASKET	GUARNIZIONE DRENAGGIO	JOINT DE VIDANGE
3	PAGB/T5783-M8X30	09116-08151	TORNILLO M8x30	BOLT M8x30	BULLONE M8x30	BOULON M8x30
4	REC57510-99J11	57510-99J10	PIÑÓN MARCHA AVANTE	POSITIVE GEAR	PIGNONE MARCIA AVANTI	PIGNON MARCHE AVANT
5	REC57631-93901	57631-93901	VARILLA SELECTOR	ROD PUSH	ASTA SELETTORE	CLAVETTE
6	REC57632-97L00	57632-97L00	PIN SELECTOR	SELECTOR PIN	PIN SELETTORE	CLAVETTE
7	REC57521-99J10	57521-99J10	PIÑÓN MARCHA ATRÁS	REVERSE GEAR	PIGNONE MARCIA INDIETRO	PIGNON MARCHE ARRIÈRE
8	REC09262-25078	09262-25003	COJINETE CIGÜEÑAL	CRANKSHAFT BEARING	CUSCINETTO ALBERO MOTORE	PALIER DE VILEBREQUIN
9	REC08110-60050	08110-60050	RODAMIENTO	BEARING	CUSCINETTO	ROULEMENT
10	REC09280-57002	09280-57002	ARO TORICO	O-RING	O-RING	JOINT TORIQUE
11	PAGB/T5787-M6X20	09116-06227	TORNILLO	BOLT, FLANGE	VITE	VIS DE BRIDE
12	REC09289-17006	09289-17L02	RETÉN ACEITE	OIL SEAL	PARAOLIO	JOINT SPI
13	REC57632-94J00	57632-94J00	SEPARADOR HELICE TRASERO	PROPELLER WASHER, BACK	DISTANZIALE ELICA, POSTERIORE	RONDELLE HÉLICE, ARRIÈRE
14	REC57633-93901	57633-93901	SEPARADOR HELICE DELANTERO	PROPELLER WASHER, FRONT	DISTANZIALE ELICA, ANTERIORE	RONDELLE HÉLICE, AVANT
15	REC09160-12066	09160-12066	ARANDELA	WASHER	RONDELLA	RONDELLE
16	REC09141-12005	09141-12005	TUERCA HÉLICE	PROPELLER NUT	DADO ELICA	ECROU D'HELICE
17	REC09204-02004	09204-02004	PIN BLOQUEADOR	COTTER PIN	COPPIGLIA	GOUPILLE
18	REC17400-99J01	17400-99J01	KIT BOMBA	PUMP KIT	KIT POMPA	KIT POMPA À EAU
19	REC17461-93903	17461-93903	IMPULSOR	IMPELLER	GIRANTE	TURBINE
20	REC09420-03005	09420-03005	CHAVETA	KEY	CHIAVETTA	CLAVETTE
21	PAGB/T848-6	09160-06082	ARANDELA	WASHER	RONDELLA	RONDELLE
22	PAGB/T6184-2000	29141-93J00	TUERCA M6	NUT M6	DADO M6	ÉCROU M6
23	REC09380-15001	09380-15001	CIRCLIP	CLIP	CERCLIP	CLIPS
24	REC08110-60020	08110-60020	RODAMIENTO	BEARING	CUSCINETTO	ROULEMENT
25	REC09160-21009	09160-21009	ARANDELA PIÑÓN	WASHER GEAR	RONDELLA PIGNONE	RONDELLE DE PIGNON
26	REC09263-20L04	09263-20L04	RODAMIENTO	BEARING	CUSCINETTO	ROULEMENT
27	REC09160-20027	09160-20027	ARANDELA PIÑON	WASHER GEAR	RONDELLA PIGNONE	RONDELLE DE PIGNON
28	REC09160-20041	09160-20041	GRUESO 1.00	SHIM 1.00	SPESSORE 1.00	CALE 1.00
	REC09160-20042	09160-20042	GRUESO 1.10	SHIM 1.10	SPESSORE 1.10	CALE 1.10
	REC09160-20043	09160-20043	GRUESO 1.20	SHIM 1.20	SPESSORE 1.20	CALE 1.20
	REC09160-20044	09160-20044	GRUESO 1.30	SHIM 1.30	SPESSORE 1.30	CALE 1.30
29	REC57311-99J10	57311-97J10	PIÑON ATAQUE	INITIATIVE GEAR	PIGNONE	PIGNON D'ATTAQUE



REC80W90U3
REC80W90U6
RECGREU1
RECGREU12

P. 43



REF	OEM
REC17400-99J01	17400-99J01

P. 475

4T STROKES DF20R, DF25R

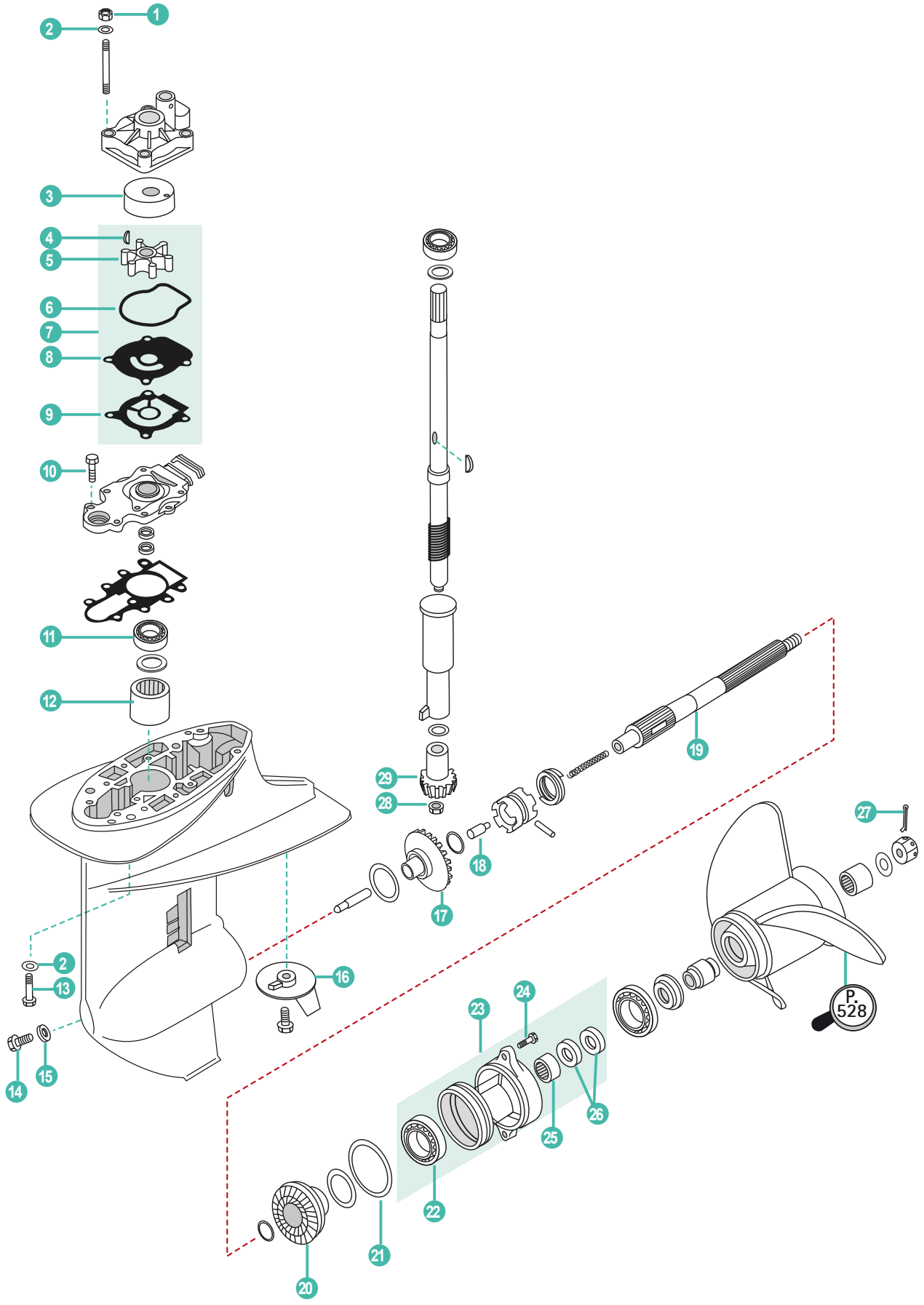

	REF	OEM				
1	PAGB/T6170-M6	29141-93J00	TUERCA HEXÁGONO M6	NUT HEXAGON M6	DADO ESAGONALE M6	ECROU HEXAGONAL M6
2	PAGB/T848-6	09160-06082	ARANDELA	WASHER	RONDELLA	RONDELLE
3	REC17413-95J00	17413-95J00	CASQUILLO INOX	SLEEVE WATER PUMP	CAPPUCCIO	INSERT DE POMPE À EAU
4	REC09420-04006	09420-04006	CHAVETA	KEY	CHIAVETTA	CLAVETTE
5	REC17461-96312	17461-96312	IMPULSOR	IMPELLER	GIRANTE	TURBINE
6	REC17416-95J00	17416-95J00	ARO TÓRICO	O-RING	FASCIA TONDA	JOINT TORIQUE
7	REC17400-95J02	17400-95J02	KIT BOMBA DE AGUA	WATER PUMP KIT	KIT POMPA ACQUA	KIT POMPE A EAU
8	REC17471-95J01	17471-95J01	TAPA DEL IMPULSOR	OUTER PLATE CARTRIDGE	COPERCHIO GIRANTE	PLAQUE DE POMPE À EAU
9	REC17472-96303	17472-96303	JUNTA DE LA BOMBA DE AGUA	WATER PUMP, GASKET	GUARNIZIONE POMPA ACQUA	JOINT POMPE À EAU
10	REC09116-06094	09116-06094	TORNILLO 6x15	SCREW 6x15	VITE 6x15	VIS 6x15
11	REC09265-17002	09265-17002	RODAMIENTO	BEARING	CUSCINETTO	ROULEMENT
12	REC09263-20046	09263-20046	RODAMIENTO	BEARING	CUSCINETTO	ROULEMENT
13	PAGB/T5787-M6X30	09116-08122	TORNILLO M6x30	BOLT M6x30	BULLONE M6x30	BOULON M6x30
14	REC09248-10008	09248-10008	TORNILLO 10x7,5	SCREW 10x7,5	VITE 10x7,5	VIS M10x7,5
15	REC09168-10022	09168-10022	ARANDELA TAPÓN	CAP, O-RING	RONDELLA TAPPO	JOINT DE VIDANGE
16	CM55125-96310	55125-96310	ÁNODO	ANODE	ANODO	ANODE
17	REC57510-89J00	57510-89J00	PIÑÓN MARCHA AVANTE	POSITIVE GEAR	PIGNONE MARCIA AVANTI	PIGNON MARCHE AVANT
18	REC09209-08016	09209-08016	VARILLA PRESION ACEITE	ROD PUSH	ASTA PRESSIONE OLIO	CLAVETTE
19	REC57610-96311	57610-96311	EJE HELICE	PROPELLER SHAFT	ASSE ELICA	ARBRE D'HELICE
20	REC57521-89J00	57521-89J00	PIÑÓN MARCHA ATRÁS	REVERSER GEAR	PIGNONE MARCIA INDIETRO	PIGNON MARCHE ARRIÈRE
21	REC09280-75001	09280-75001	ARO TÓRICO	O-RING	FASCIA TONDA	JOINT TORIQUE
22	REC08113-60060	08113-60060	RODAMIENTO	BEARING	CUSCINETTO	ROULEMENT
23	REC56120-96332-0EP	56120-96332-0EP	DIÁBOLO	CARRIER	DIAVOLO	DIABOLO
24	REC09116-06121	09116-06121	TORNILLO	BOLT	VITE	VIS
25	REC09263-20047	09263-20047	RODAMIENTO	BEARING	CUSCINETTO	ROULEMENT
26	REC09289-20009	09289-20009	RETÉN ACEITE	OIL SEAL	PARAOLIO	JOINT SPI
27	REC91490-40030	09204-03003	PIN BLOQUEADOR	COTTER PIN	COPPIGLIA	GOUPILLE
28	REC90179-08M06	09159-08046	TUERCA DE PIÑÓN M8X1	NUT, PINION M8X1	DADO PIGNONE M8X1	ECROU DE PIGNON M8
29	REC57311-96320	57311-96320	PIÑON ATAQUE	INITIATIVE GEAR	PIGNONE ATTACCO	PIGNON D'ATTAQUE



REC80W90U3
REC80W90U6
RECGREU1
RECGREU12
P. 43

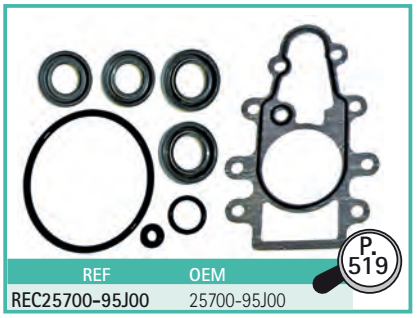
REF OEM
REC25700-95J00 25700-95J00
P. 519


REF OEM
REC57630-96300 57630-96300
P. 531

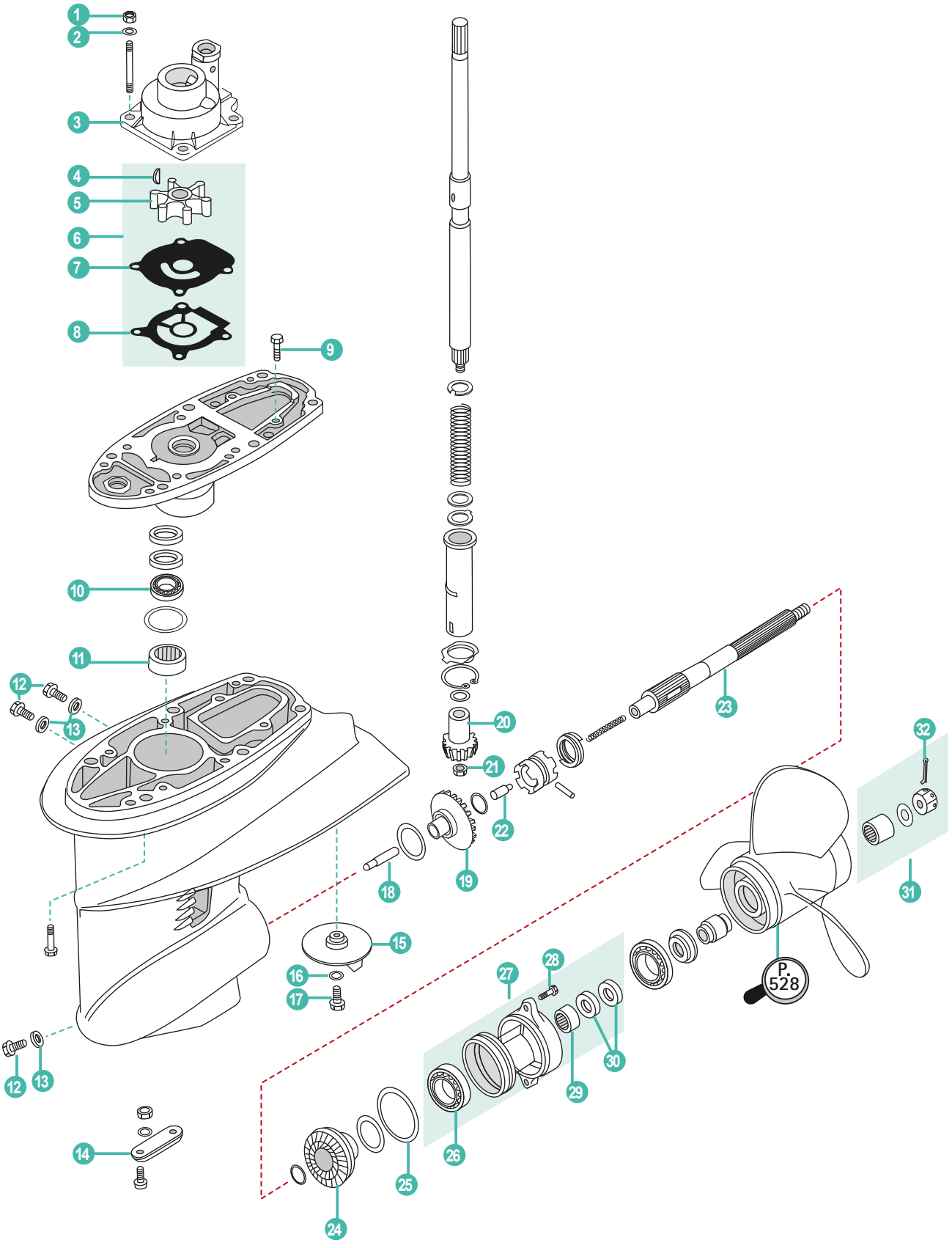
1
2
3
4
5
6
7
8
9
10
11
12
13
14
15
16
17
18
19
20
21
22
23
24
25
26
27
28
29
30
31
32
P. 528

	REF	OEM				
1	PAGB/T6184-2000	09141-06020	TUERCA M6	NUT M6	DADO M6	ÉCROU M6
2	PAGB/T848-6	09162-06006	ARANDELA	WASHER	RONDELLA	RONDELLE
3	REC17411-94421	17411-94421	CUERPO BOMBA AGUA	HOUSING WATER PUMP	CORPO POMPA ACQUA	CORPS DE POMPE À EAU
4	REC09420-04006	09420-04006	CHAVETA	KEY	CHIAVETTA	CLAVETTE
5	REC17461-96312	17461-96312	IMPULSOR	IMPELLER	GIRANTE	TURBINE
6	REC17400-96403	17400-96352	KIT BOMBA DE AGUA	WATER PUMP KIT	KIT POMPA ACQUA	KIT POMPE A EAU
7	REC17471-94401	17471-94401	BASE BOMBA AGUA	PLATE, WATER PUMP	BASE POMPA ACQUA	BASE DE POMPE À EAU
8	REC17472-96303	17472-96303	JUNTA DE LA BOMBA DE AGUA	WATER PUMP, GASKET	GUARNIZIONE POMPA ACQUA	JOINT POMPE À EAU
9	PAGB/T5787-M6X20	09116-06106	TORNILLO	BOLT, FLANGE	VITE	VIS DE BRIDE
10	REC09265-17002	09265-17002	RODAMIENTO	BEARING	CUSCINETTO	ROULEMENT
11	REC09263-20046	09263-20046	RODAMIENTO	BEARING	CUSCINETTO	ROULEMENT
12	REC09248-10008	09248-10008	TORNILLO 10x7,5	SCREW 10x7,5	VITE 10x7,5	VIS 10x7,5
13	REC09168-10022	09168-10022	ARANDELA TAPÓN	CAP, O-RING	RONDELLA TAPPO	JOINT DE VIDANGE
14	CM55300-95500	55300-95500	ÁNODO	ANODE	ANODO	ANODE
15	CM55125-96310	55125-96310	ÁNODO	ANODE	ANODO	ANODE
16	PAGB/T97.1-8		ARANDELA 8	WASHER 8	RONDELLA 8	RONDELLE 8
17	PAGB/T5783-M8X16	09117-08037	TORNILLO M8x16	BOLT M8x16	BULLONE M8x16	BOULON M8x16
18	REC57631-96301	57631-96301	VARILLA PRESION ACEITE	ROD PUSH	ASTA PRESSIONE OLIO	CLAVETTE
19	REC57510-89J00	57510-89J00	PIÑÓN MARCHA AVANTE	POSITIVE GEAR	PIGNONE MARCIA AVANTI	PIGNON MARCHE AVANT
20	REC57311-96320	57311-96320	PIÑON ATAQUE	INITIATIVE GEAR	PIGNONE ATTACCO	PIGNON D'ATTAQUE
21	REC90179-08M06	09159-08046	TUERCA DE PIÑÓN M8X1	NUT, PINION M8X1	DADO PIGNONE M8X1	ECROU DE PIGNON M8
22	REC09209-08016	09209-08016	VARILLA PRESION ACEITE	ROD PUSH	ASTA PRESSIONE OLIO	CLAVETTE
23	REC57610-96311	57610-96311	EJE HELICE	PROPELLER SHAFT	ASSE ELICA	ARBRE D'HELICE
24	REC57521-89J00	57521-89J00	PIÑÓN MARCHA ATRÁS	REVERSER GEAR	PIGNONE MARCIA INDIETRO	PIGNON MARCHE ARRIÈRE
25	REC925093	09280-75002	ARO TORICO SUPERIOR	O-RING UPPER	O-RING SUPERIORE	JOINT TORIQUE SUPERIEUR
26	REC08113-60060	08113-60060	RODAMIENTO	BEARING	CUSCINETTO	ROULEMENT
27	REC56120-96332-0EP	56120-96332-0EP	DIÁBOLO	CARRIER	DIAVOLO	DIABOLO
28	REC09116-06121	09116-06121	TORNILLO	BOLT	VITE	VIS
29	REC09263-20047	09263-20047	RODAMIENTO	BEARING	CUSCINETTO	ROULEMENT
30	REC09289-20009	09289-20009	RETÉN ACEITE	OIL SEAL	PARAOLIO	JOINT SPI
31	REC57630-96300	57630-96300	KIT CIERRE DE HÉLICE	PROP NUT KIT	KIT CHIUSURA ELICA	KIT ECROU D'HELICE
32	REC91490-40030	09204-03003	PIN BLOQUEADOR	COTTER PIN	COPPIGLIA	GOUPILLE



REC80W90U3
REC80W90U6
RECGREU1
RECGREU12

P. 43

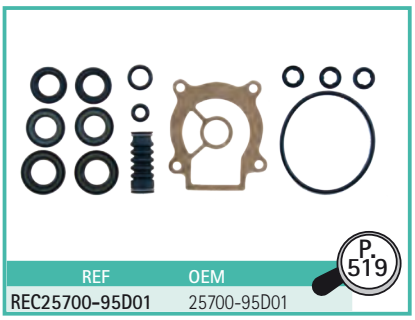

REF	OEM
REC25700-95D01	25700-95D01

P. 519

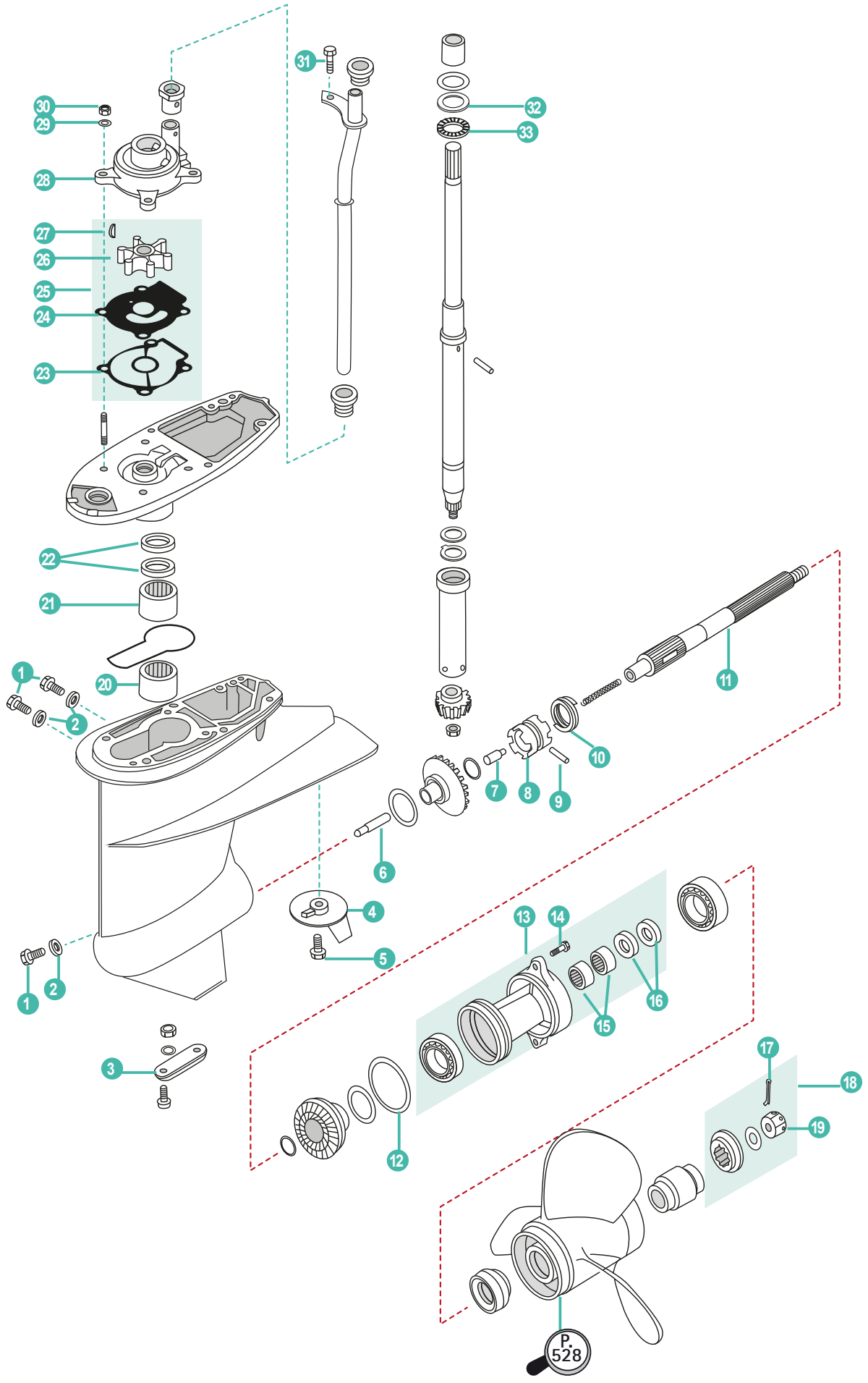
31
30
29
28
27
26
25
24
23
32
33
22
21
20
1
2
11
10
7
8
9
6
4
5
13
14
16
15
12
17
18
19
3
P. 528

	REF	OEM				
1	REC09248-10008	09248-10008	TORNILLO 10x7,5	SCREW 10x7,5	VITE 10x7,5	VIS M10x7,5
2	REC09168-10022	09168-10022	ARANDELA TAPÓN	CAP, O-RING	RONDELLA TAPPO	JOINT DE VIDANGE
3	CM55300-95500	55300-95500	ÁNODO	ANODE	ANODO	ANODE
4	CM55125-95500	55125-95500	ÁNODO	ANODE	ANODO	ANODE
5	PAGB/T5783-M8X16	09117-08109	TORNILLO M8x16	BOLT M8x16	BULLONE M8x16	BOULON M8x16
6	REC57631-95303	57631-95303	VARILLA PRESION ACEITE	ROD PUSH	ASTA PRESSIONE OLIO	CLAVETTE
7	REC57634-88L00	57634-88L00	PIN SELECTOR	CLUTCH PIN	PIN SELETTORE	CALVETTE
8	REC57621-94403	57621-87J03	SELECTOR	SELETTORE	CLUTCH DOG	CRABOT
9	REC09202-04002	09202-04002	PIN HELICE	PROPELLER PIN	PIN ELICA	CLAVETTE D'HELICE
10	REC09440-40002	09440-40002	MUELLE SELECTOR	SPRING CLUTCH	MOLLA SELETTORE	RESSORT
11	REC57610-94402	57610-94402	EJE HELICE	PROPELLER SHAFT	ASSE ELICA	ARBRE D'HELICE
12	REC09280-75001	09280-75001	ARO TÓRICO	O-RING	FASCIA TONDA	JOINT TORIQUE
13	REC56120-94321-0EP	56120-94321-0EP	DIÁBOLO	CARRIER	DIAVOLO	DIABOLO
14	PAGB/T5783-M8X30	09117-08047	TORNILLO M8x30	BOLT M8x30	BULLONE M8x30	BOULON M8x30
15	REC09263-22020	09263-22020	RODAMIENTO	BEARING	CUSCINETTO	ROULEMENT
16	REC09289-22007	09289-22007	RETÉN ACEITE	OIL SEAL	PARAOLIO	JOINT SPI
17	REC91490-40030	09204-03003	PIN BLOQUEADOR	COTTER PIN	COPPIGLIA	GOUPILLE
18	REC57630-94300	57630-94301	KIT CIERRE DE HÉLICE	PROP NUT KIT	KIT CHIUSURA ELICA	KIT ECROU D'HELICE
19	REC90171-18M04	09141-18005	TUERCA	NUT	DADO	ÉCROU
20	REC09263-22L03	09263-22039	RODAMIENTO	BEARING	CUSCINETTO	ROULEMENT
21	REC09263-25025	09263-25025	RODAMIENTO	BEARING	CUSCINETTO	ROULEMENT
22	REC09282-17005	09282-17005	RETÉN ACEITE	OIL SEAL	PARAOLIO	JOINT SPI
23	REC17472-96303	17472-96303	JUNTA DE LA BOMBA DE AGUA	WATER PUMP, GASKET	GUARNIZIONE POMPA ACQUA	JOINT POMPE À EAU
24	REC17471-94401	17471-94401	BASE BOMBA AGUA	PLATE, WATER PUMP	BASE POMPA ACQUA	BASE DE POMPE À EAU
25	REC17400-96403	17400-96403	KIT BOMBA DE AGUA	WATER PUMP KIT	KIT POMPA ACQUA	KIT POMPE A EAU
26	REC17461-96312	17461-96312	IMPULSOR	IMPELLER	GIRANTE	TURBINE
27	REC09420-04006	09420-04006	CHAVETA	KEY	CHIAVETTA	CLAVETTE
28	REC17411-94421	17411-94421	CUERPO BOMBA AGUA	HOUSING WATER PUMP	CORPO POMPA ACQUA	CORPS DE POMPE À EAU
29	PAGB/T93-6	29162-93J00	ARANDELA 6	WASHER 6	RONDELLA 6	RONDELLE 6
30	PAGB/T6170-M6	29141-93J00	TUERCA HEXÁGONO M6	NUT HEXAGON M6	DADO ESAGONALE M6	ECROU HEXAGONAL M6
31	REC09116-06094	09116-06094	TORNILLO 6x15	SCREW 6x15	VITE 6x15	VIS 6x15
32	REC09160-26015	09160-26015	ARANDELA PIÑÓN	WASHER GEAR	RONDELLA PIGNONE	RONDELLE DE PIGNON
33	REC09263-25062	09263-25062	RODAMIENTO	BEARING	CUSCINETTO	ROULEMENT



REC80W90U3
REC80W90U6
RECGREU1
RECGREU12

P. 43



REF	OEM
REC17400-96403	17400-96353

P. 474

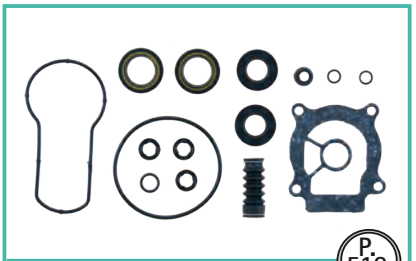

REF	OEM
REC25700-88L00	

P. 519

4T STROKES DF40A, DF50A, DF60A

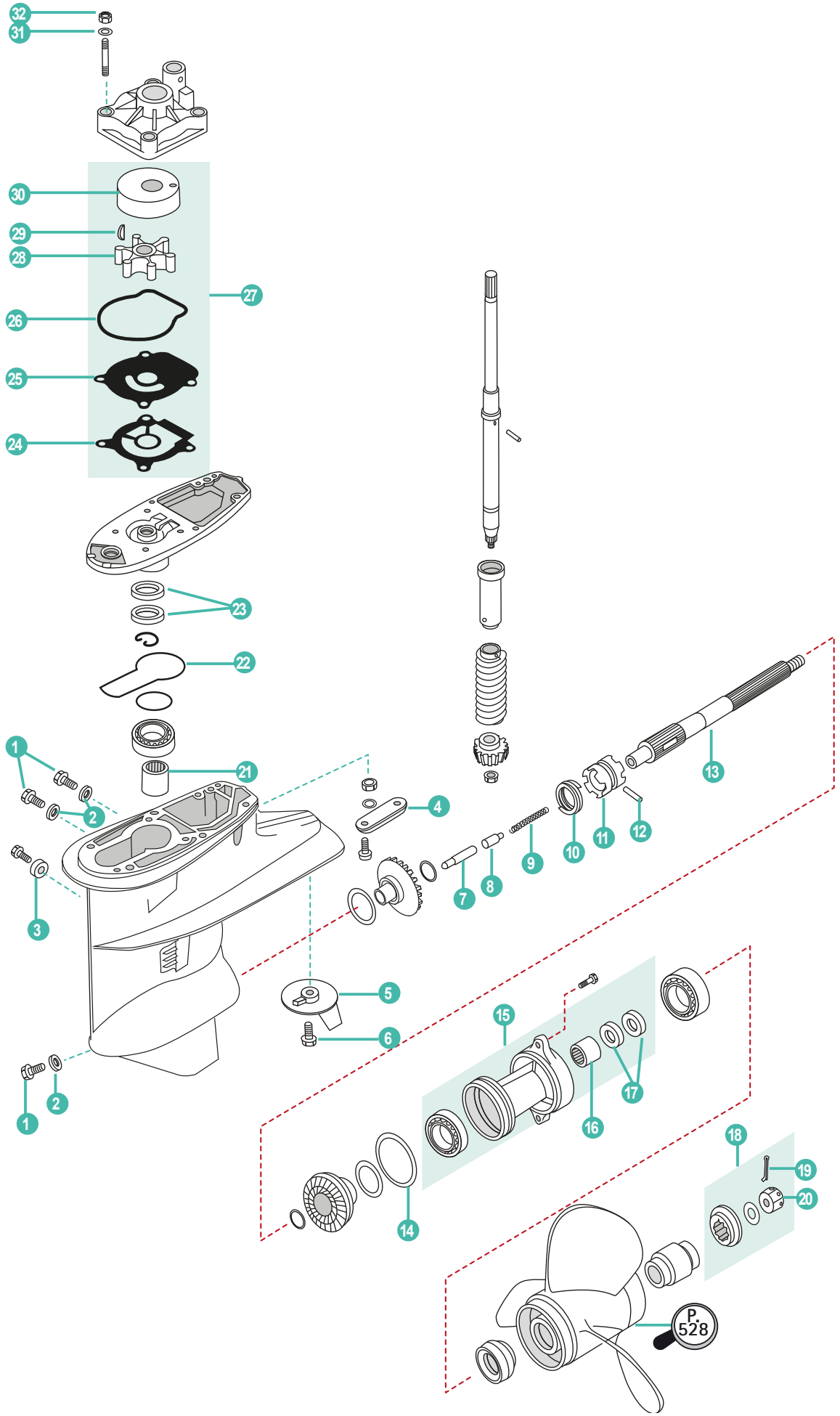

	REF	OEM				
1	REC09248-10008	09248-10008	TORNILLO 10x7,5	SCREW 10x7,5	VITE 10x7,5	VIS 10x7,5
2	REC09168-10022	09168-10022	ARANDELA TAPÓN	CAP, O-RING	RONDELLA TAPPO	JOINT DE VIDANGE
3	CM55321-87J00	55321-87J00	ÁNODO	ANODE	ANODO	ANODE
4	CM55300-95500	55300-95500	ÁNODO	ANODE	ANODO	ANODE
5	CM55125-94400	55125-94400	ÁNODO	ANODE	ANODO	ANODE
6	PAGB/T5783-M8X16	09117-08109	TORNILLO M8x16	BOLT M8x16	BULLONE M8x16	BOULON M8x16
7	REC57631-95303	57631-95303	VARILLA DE PRESIÓN	ROD PUSH	ASTA PRESSIONE OLIO	DOIGT
8	REC57634-88L00	57634-88L00	PIN SELECTOR	CLUTCH PIN	PIN SELETTORE	CALVETTE
9	REC09440-08043	09440-08043	MUELLE SELECTOR	SPRING CLUTCH	MOLLA SELETTORE	RESSORT DE SELECTEUR
10	REC09440-40002	09440-40002	MUELLE SELECTOR	SPRING CLUTCH	MOLLA SELETTORE	RESSORT DE SELECTEUR
11	REC57621-94403	57621-87J03	SELECTOR	SELETTORE	CLUTCH DOG	CRABOT
12	REC09202-05022	09202-05022	PIN SELECTOR	CLUTCH PIN	PIN SELETTORE	CALVETTE
13	REC57610-94402	57610-94402	EJE HELICE	PROPELLER SHAFT	ASSE ELICA	ARBRE D'HELICE
14	REC09280-75001	09280-75001	ARO TÓRICO	O-RING	FASCIA TONDA	JOINT TORIQUE
15	REC56120-94321-0EP	56120-94321-0EP	DIÁBOLO	CARRIER	DIAVOLO	DIABOLO
16	REC09263-22020	09263-22020	RODAMIENTO	BEARING	CUSCINETTO	ROULEMENT
17	REC09289-22007	09289-22007	RETÉN ACEITE	OIL SEAL	PARAOLIO	JOINT SPI
18	REC57630-94300	57630-94300	KIT CIERRE DE HÉLICE	PROP NUT KIT	KIT CHIUSURA ELICA	KIT ECROU D'HELICE
19	REC91490-40030	09204-03003	PIN BLOQUEADOR	COTTER PIN	COPPIGLIA	GOUPILLE
20	REC90171-18M04	09141-18005	TUERCA	NUT	DADO	ÉCROU
21	REC09263-22L03	09263-22039	RODAMIENTO	BEARING	CUSCINETTO	ROULEMENT
22	REC55122-94400	55122-88L00	JUNTA TORICA	O-RING	O-RING	JOINT TORIQUE
23	REC09282-17005	09282-17005	RETÉN ACEITE	OIL SEAL	PARAOLIO	JOINT SPI
24	REC17472-96303	17472-96303	JUNTA DE LA BOMBA DE AGUA	WATER PUMP, GASKET	GUARNIZIONE POMPA ACQUA	JOINT POMPE À EAU
25	REC17471-95J01	17471-95J01	TAPA DEL IMPULSOR	OUTER PLATE CARTRIDGE	COPERCHIO GIRANTE	PLAQUE DE POMPE À EAU
26	REC17416-95J00	17416-95J00	ARO TÓRICO	O-RING	FASCIA TONDA	JOINT TORIQUE
27	REC17400-88L00	17400-88L00	KIT BOMBA DE AGUA	WATER PUMP KIT	KIT POMPA ACQUA	KIT POMPE A EAU
28	REC17461-96312	17461-96312	IMPULSOR	IMPELLER	GIRANTE	TURBINE
29	REC09420-04006	09420-04006	CHAVETA	KEY	CHIAVETTA	CLAVETTE
30	REC17413-95J00	17413-95J00	CASQUILLO INOX	SLEEVE WATER PUMP	CAPPUCCIO	INSERT DE POMPE À EAU
31	PAGB/T93-6	29162-93J00	ARANDELA MUELLE 6	WASHER SPRING 6	RONDELLA MOLLA 6	RESSORT 6
32	PAGB/T6170-M6	29141-93J00	TUERCA HEXÁGONO M6	NUT HEXAGON M6	DADO ESAGONALE M6	ECROU HEXAGONAL M6



REC80W90U3
REC80W90U6
RECGREU1
RECGREU12

P. 43

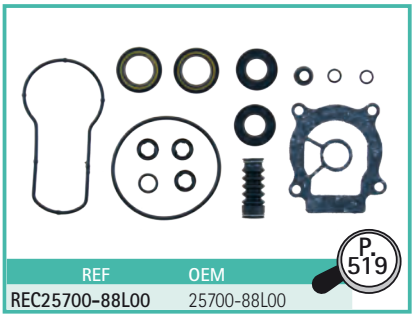

REF	OEM
REC25700-88L00	25700-88L00

P. 519

4T STROKES DF60, DF70

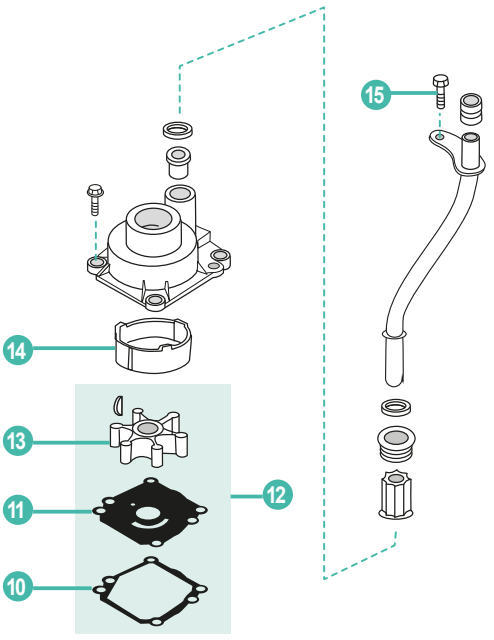



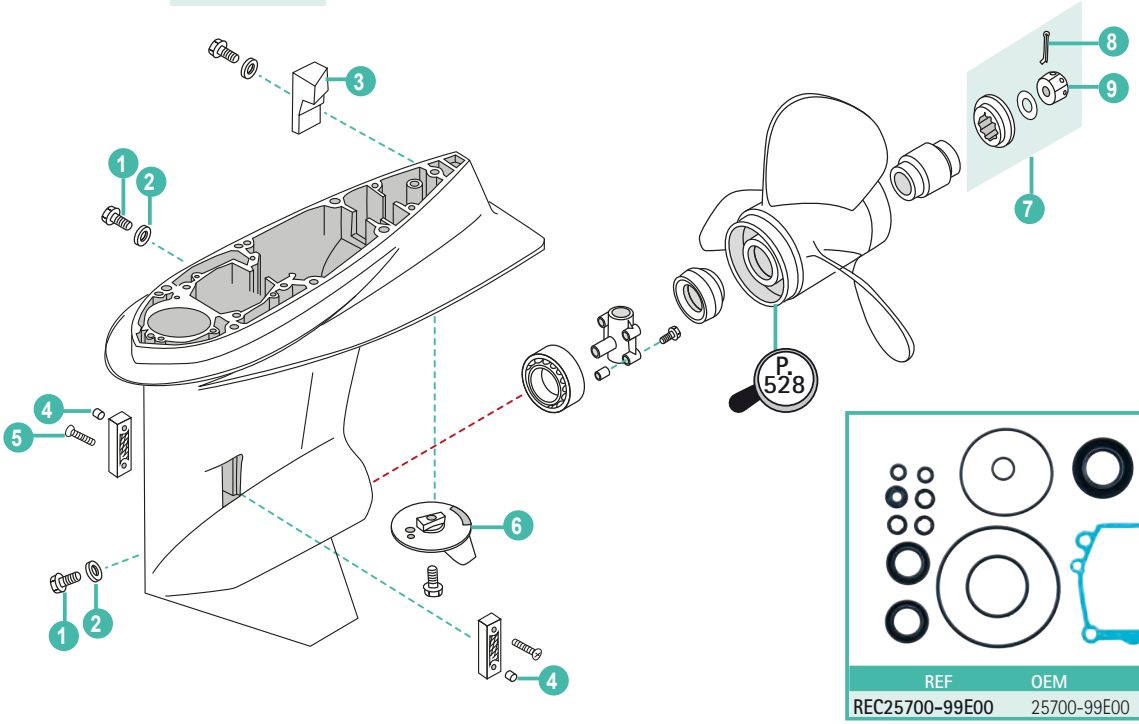

	REF	OEM				
1	REC09248-10008	09248-10008	TORNILLO 10x7,5	SCREW 10x7,5	VITE 10x7,5	VIS 10x7,5
2	REC09168-10022	09168-10022	ARANDELA TAPÓN	CAP, O-RING	RONDELLA TAPPO	JOINT DE VIDANGE
3	CM55321-90J01	55321-90J01	ÁNODO	ANODE	ANODO	ANODE
4	PAGB/T889.1-M4	09140-04007	TUERCA HEXAGONAL M4	NUT HEXAGON M4	DADO ESAGONALE M4	ECROU HEXAGONAL M4
5	PAGB/T818-M4X30	09125-04023	TORNILLO M4x30	SCREW PAN HEAD M4x30	VITE TESTA M4x30	VIS M4x30
6	TEN01215	55125-90J01	ÁNODO	ANODE	ANODO	ANODE
7	REC57630-94500	57630-94500	KIT CIERRE HELICE	PROP NUT KIT	KIT CHIUSURA ELICA	KIT ECROU D'HELICE
8	REC91490-40030	09204-03003	PIN BLOQUEADOR	COTTER PIN	COPPIGLIA	GOUPILLE
9	REC90171-18M04	09141-18005	TUERCA	NUT	DADO	ÉCROU
10	REC17472-87E10	17472-87E10	JUNTA BOMBA AGUA	WATER PUMP GASKET	GUARZIONE POMPA ACQUA	JOINT DE POMPE À EAU
11	REC17471-92J00	17471-87E01	PLACA BOMBA DE AGUA	PATE, WATER PUMP	PLACCA POMPA ACQUA	PLAQUE DE POMPE A EAU
12	REC17400-87E04	17400-87E03	KIT REPARACION BOMBA AGUA	WATER PUMP KIT	KIT RIPARAZIONE POMPA ACQUA	KIT TURBINE
13	REC17461-87E12	17461-87E12	IMPULSOR	IMPELLER	GIRANTE	TURBINE
14	REC17413-99E11	17413-99E10	CASQUILLO INOX	INSERT CUP	GHIERA INOX	INSERT INOX POMPE A EAU
15	PAGB/T5783-M6X16	09116-06225	TORNILLO HEXAGONAL M6x16	BOLT HEXAGON M6x16	BULLONE ESAGONALE M6x16	BOULON HEXAGONAL M6x16

REF	OEM
REC25700-99E00	25700-99E00

4T STROKES DF70A, DF80A, DF90A, DF100B

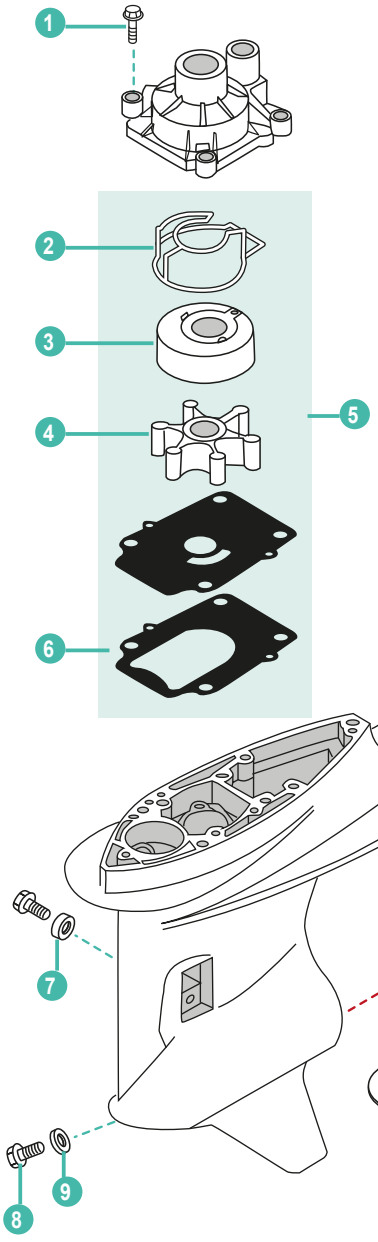



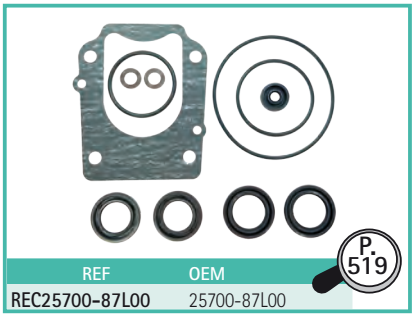

REF	OEM
REC25700-87L00	25700-87L00

	REF	OEM				
1	PAF8-00000003	29116-93J10	TORNILLO M8x35	BOLT M8x35	BULLONE M8x35	BOULON M8x35
2	REC17416-99E10	17416-99E10	JUNTA TORICA	O-RING	O-RING	JOINT TORIQUE
3	REC17413-99E11	17413-99E10	CASQUILLO INOX	INSERT CUP	GHIERA INOX	INSERT INOX POMPE A EAU
4	REC17461-87E12	17461-87E12	IMPULSOR	IMPELLER	GIRANTE	TURBINE
5	REC17400-87L01	17400-87L01	KIT BOMBA DE AGUA	WATER PUMP KIT	KIT POMPA ACQUA	KIT POMPE A EAU
6	REC17472-87L00	17472-87L00	JUNTA BOMBA AGUA	WATER PUMP GASKET	GUARZIONE POMPA ACQUA	JOINT DE POMPE À EAU
7	CM55321-87J00	55321-87J00	ÁNODO	ANODE	ANODO	ANODE
8	REC09248-10008	09248-10008	TORNILLO 10x7,5	SCREW 10x7,5	VITE 10x7,5	VIS 10x7,5
9	REC09168-10034	09168-10034	JUNTA	GASKET	GUARNIZIONE	JOINT DE VIDANGE
10	TEN01215	55125-90J01	ÁNODO	ANODE	ANODO	ANODE
11	REC90171-18M04	09141-18005	TUERCA	NUT	DADO	ECROU D'HELICE
12	REC91490-40030	09204-03003	PIN BLOQUEADOR	COTTER PIN	COPPIGLIA	GOUPILLE

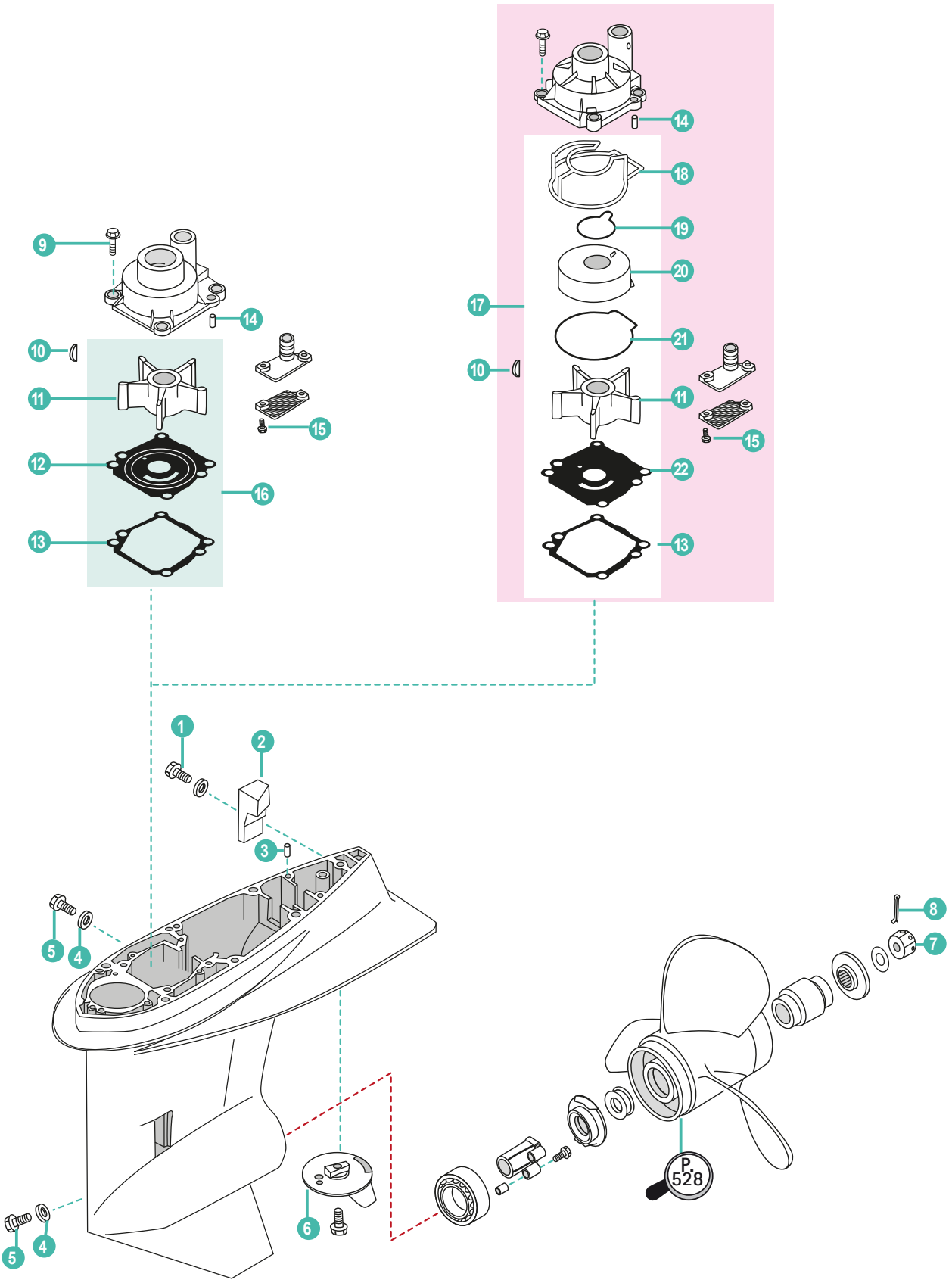
1
2
3
4
5
6
7
8
9
10
11
12
13
14
15
16
17
18
19
20
21
22
P. 528

	REF	OEM				
1	PAGB/T5783-M6X12	09100-06130	TORNILLO M6x12	BOLT M6x12	BULLONE M6x12	BOULON M6x12
2	CM55321-90J01	55321-90J01	ÁNODO	ANODE	ANODO	ANODE
3	PAF25-00000014	09202-08006	PIN CENTRADOR F8x12	PIN, DOWEL F8x12	PIN, CENTRAGGIO F8x12	GOUPILLE FENDUE 8x12
4	REC09168-10022	09168-10022	TORNILLO 10x7,5	SCREW 10x7,5	VITE 10x7,5	VIS M10x7,5
5	REC09248-10008	09248-10008	ARANDELA TAPÓN	CAP, O-RING	RONDELLA TAPPO	JOINT DE VIDANGE
6	TEN01215	55125-90J01	ÁNODO	ANODE	ANODO	ANODE
7	REC90171-18M04	09141-18005	TUERCA	NUT	DADO	ÉCROU
8	REC91490-40030	08204-03003	PIN BLOQUEADOR	COTTER PIN	COPPIGLIA	GOUPILLE
			MODELOS ANTIGUOS	OLDER MODELS	MODELLI VECCHIO	ANCIENS MODELES
9	PAGB/T5783-M8X25	09117-08057	PERNO M8X25	BOLT M8X25	BULLONE M8	BOULON M8X25
10	REC09420-05009	09420-05009	CHAVETA	KEY	CHIAVETTA	CLAVETTE
11	REC17461-90J01	17461-90J01	IMPULSOR	IMPELLER	GIRANTE	TURBINE
12	REC17471-92J00	17471-92J00	TAPA DEL IMPULSOR	OUTER PLATE CARTRIDGE	COPERCHIO GIRANTE	PLAQUE DE POMPE À EAU
13	REC17472-87E10	17472-87E10	JUNTA BOMBA AGUA	WATER PUMP GASKET	GUARZIONE POMPA ACQUA	JOINT DE POMPE À EAU
14	REC93606-12019	09202-06031	PIN F6X12	PIN F6X12	SPINOTTO F6X12	LEVIER F6X12
15	PAGB/T8.8-2000	09125-05046	TORNILLO M5X12	SCREW, PAN HEAD M5X12	VITE M5X12	VIS M5X12
16	REC17400-90J20	17400-90J20	KIT BOMBA DE AGUA	WATER PUMP KIT	KIT POMPA ACQUA	KIT POMPE A EAU
			MODELOS MODERNOS	NEWER MODELS	MODELLI MODERNI	MODELES RECENTS
17	REC17400-92J21	17400-92J21	KIT BOMBA DE AGUA	WATER PUMP KIT	KIT POMPA ACQUA	KIT POMPE A EAU
18	REC17416-92J10	17416-92J10	TÓRICA BOMBA DE AGUA	WATER PUMP, SEAL	FASCIA TONDA	JOINT TORIQUE
19	REC17417-92J00	17417-92J00	JUNTA TORICA	O-RING	O-RING	JOINT TORIQUE
20	REC17413-92J01	17416-92J01	CASQUILLO INOX	INSERT CUP	GHIERA INOX	INSERT INOX POMPE A EAU
21	REC17416-92J00	17416-92J00	JUNTA TORICA	O-RING	O-RING	JOINT TORIQUE
22	REC17471-92J00	17471-92J00	TAPA DEL IMPULSOR	OUTER PLATE CARTRIDGE	COPERCHIO GIRANTE	PLAQUE DE POMPE À EAU



REC80W90U3
REC80W90U6
RECGREU1
RECGREU12

P. 43

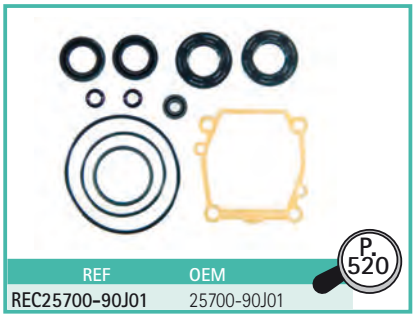

REF	OEM
REC25700-90J01	25700-90J01

P. 520

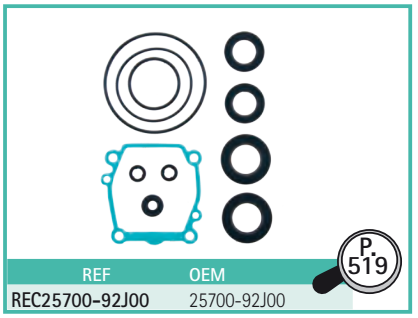

REF	OEM
REC25700-92J00	25700-92J00

P. 519

4T STROKES DF100A, DF115A, DF140A

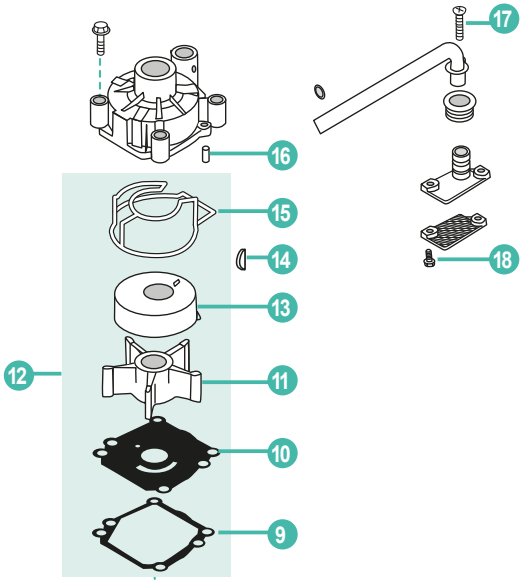



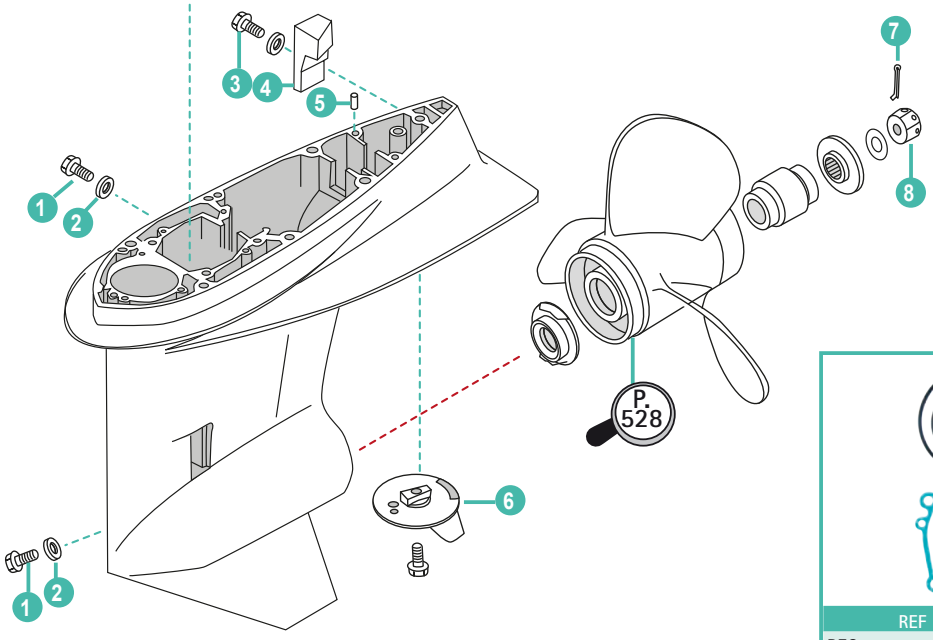

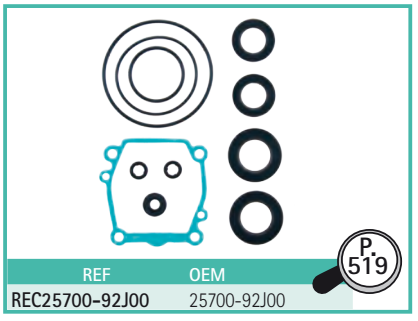

	REF	OEM				
1	REC09248-10008	09248-10008	TORNILLO 10x7,5	SCREW 10x7,5	VITE 10x7,5	VIS 10x7,5
2	REC09168-10022	09168-10022	ARANDELA TAPÓN	CAP, O-RING	RONDELLA TAPPO	JOINT DE VIDANGE
3	PAGB/T5783-M6X12	09100-06130	TORNILLO M6x12	BOLT M6x12	BULLONE M6x12	BOULON M6x12
4	CM55321-90J01	55321-90J01	ÁNODO	ANODE	ANODO	ANODE
5	PAF25-00000014	09202-08006	PIN CENTRADOR F8x12	PIN, DOWEL F8x12	PIN, CENTRAGGIO F8x12	GOUPILLE FENDUE 8x12
6	TEN01215	55125-90J01	ÁNODO	ANODE	ANODO	ANODE
7	REC91490-40030	09240-03003	PIN BLOQUEADOR	COTTER PIN	COPPIGLIA	GOUPILLE
8	REC90171-18M04	09141-18005	TUERCA	NUT	DADO	ÉCROU
9	REC17472-87E10	17472-87E10	JUNTA BOMBA AGUA	WATER PUMP GASKET	GUARZIONE POMPA ACQUA	JOINT DE POMPE À EAU
10	REC17471-92J00	17471-92J00	TAPA DEL IMPULSOR	OUTER PLATE CARTRIDGE	COPERCHIO GIRANTE	PLAQUE DE POMPE À EAU
11	REC17461-90J01	17461-90J01	IMPULSOR	IMPELLER	GIRANTE	TURBINE
12	REC17400-92J21	17400-92J21	KIT BOMBA DE AGUA	WATER PUMP KIT	KIT POMPA ACQUA	KIT POMPE A EAU
13	REC17413-92J01	17413-92J01	CASQUILLO INOX	INSERT CUP	GHIERA INOX	INSERT INOX POMPE A EAU
14	REC09420-05009	09420-05009	CHAVETA	KEY	CHIAVETTA	CLAVETTE
15	REC17416-92J10	17416-92J10	TÓRICA BOMBA DE AGUA	WATER PUMP, SEAL	FASCIA TONDA	JOINT TORIQUE
16	REC93606-12019	09202-06031	PIN F6X12	PIN F6X12	SPINOTTO F6X12	LEVIER F6X12
17	PAGB/T818-M6X10	09125-06063	TORNILLO M6x10	BOLT M6x10	BULLONE M6x10	BOULON M6x10
18	PAGB/T8.8-2000	09125-05046	TORNILLO M5X12	SCREW, PAN HEAD M5X12	VITE M5X12	VIS M5X12

4T STROKES DF150, DF175, DF200, DF225, DF250

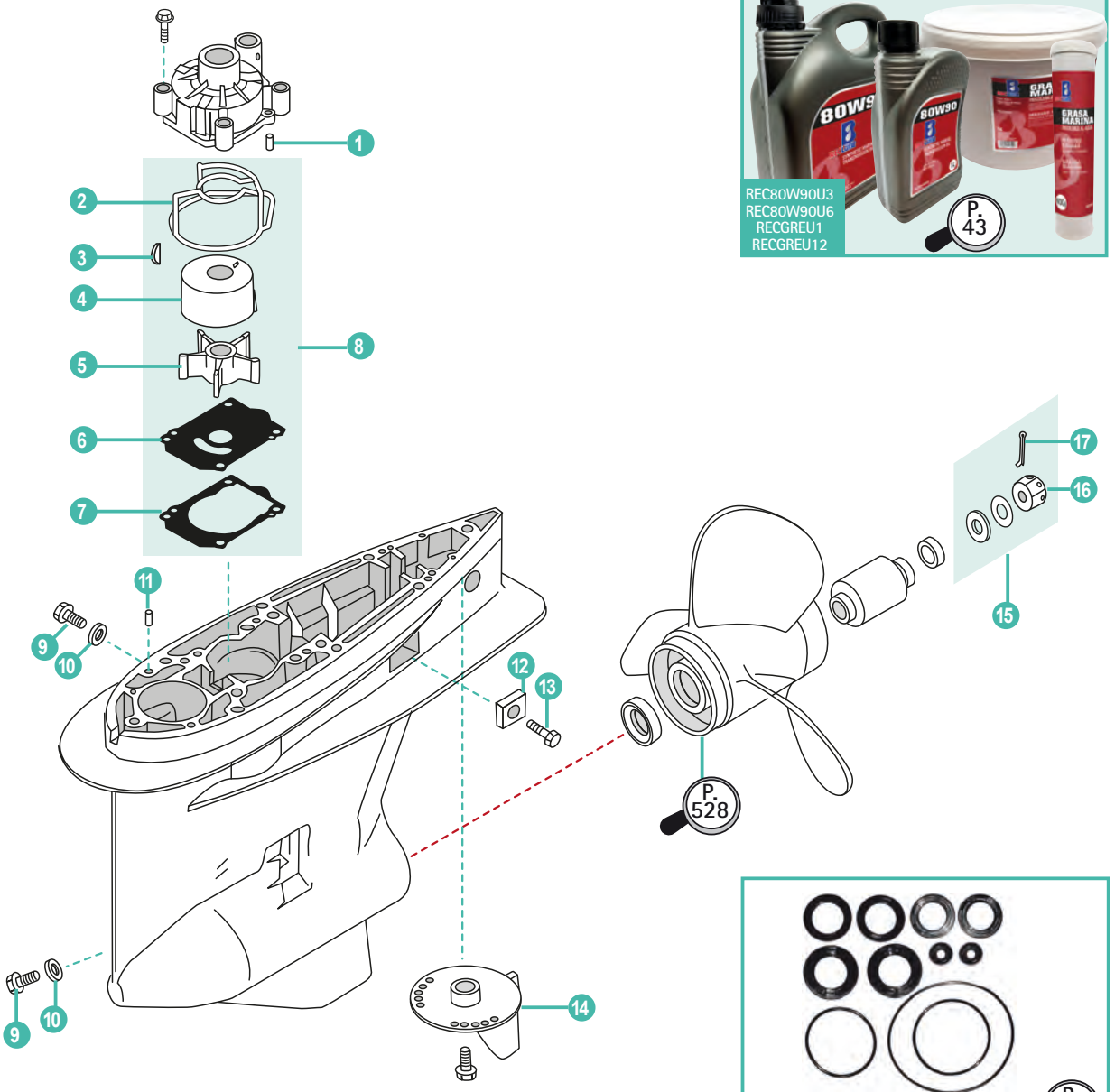

	REF	OEM				
1	REC93606-12019	09202-06031	PIN F6X12	PIN F6X12	SPINOTTO F6X12	LEVIER F6X12
2	REC17416-96J00	17416-96J00	JUNTA TORICA	O-RING	O-RING	JOINT TORIQUE
3	REC09420-05009	09420-05009	CHAVETA	KEY	CHIAVETTA	CLAVETTE
4	REC17413-96J01	17413-96J01	CASQUILLO INOX	SLEEVE WATER PUMP	CAPPUCCIO	INSERT DE POMPE À EAU
5	REC17461-90J01	17461-90J01	IMPULSOR	IMPELLER	GIRANTE	TURBINE
6	REC17471-92J02	17471-93J02	TAPA DEL IMPULSOR	IMPELLER PLATE	COPERCHIO GIRANTE	PLAQUE DE POMPE À EAU
7	REC17472-93J00	17472-93J00	JUNTA	GASKET	GUARNIZIONE	JOINT
8	REC17400-96J03	17400-96J03	KIT BOMBA DE AGUA	WATER PUMP KIT	KIT POMPA ACQUA	KIT POMPE A EAU
9	REC55128-93J10	55128-93J10	TAPON DRENAJE COLA	WATER PLUG DRAIN	GUARNIZIONE DRENAGGIO	BOUCHON DE VIDANGE
10	REC09168-10034	09168-10034	JUNTA	GASKET	GUARNIZIONE	JOINT
11	PAF25-00000014	09202-08006	PIN CENTRADOR F8x12	PIN, DOWEL F8x12	PIN, CENTRAGGIO F8x12	GOUPILLE FENDUE 8x12
12	CM55320-95310	55320-95311	ÁNODO	ANODE	ANODO	ANODE
13	REC09116-06094	09116-06094	TORNILLO 6x15	SCREW 6x15	VITE 6x15	VIS M6x15
14	TEN01215	55125-98J00	ÁNODO	ANODE	ANODO	ANODE
15	REC57630-92E00	57630-92E00	KIT CIERRE HELICE	PROP NUT KIT	KIT CHIUSURA ELICA	KIT ECROU D'HELICE
16	REC90171-18M04	09141-18005	TUERCA	NUT	DADO	ÉCROU
17	REC91490-40030	09204-03003	PIN BLOQUEADOR	COTTER PIN	COPPIGLIA	GOUPILLE

4T STROKES DF250AP, DF350AP

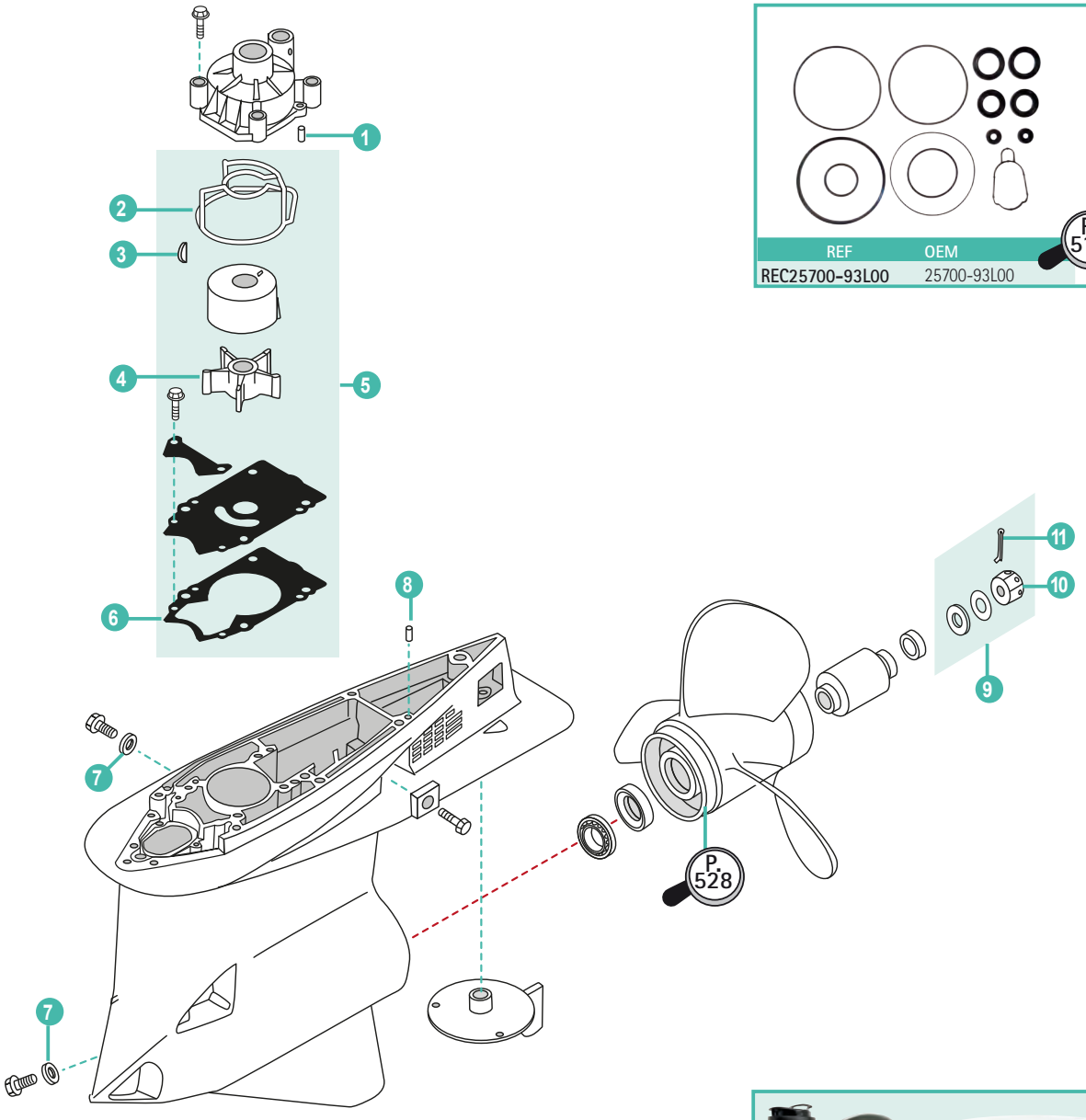



	REF	OEM				
1	REC93606-12019	09202-06031	PIN F6X12	PIN F6X12	SPINOTTO F6X12	LEVIER F6X12
2	REC17416-93J00	17416-93J00	TÓRICA BOMBA DE AGUA	WATER PUMP, SEAL	FASCIA TONDA	JOINT TORIQUE
3	REC09420-05009	09420-05009	CHAVETA	KEY	CHIAVETTA	CLAVETTE
4	REC17461-93J00	17461-93J00	IMPULSOR	IMPELLER	GIRANTE	TURBINE
5	REC17400-98J01	17400-98J01	KIT BOMBA DE AGUA	WATER PUMP KIT	KIT POMPA ACQUA	KIT POMPE A EAU
6	REC17472-98J00	17472-98J00	JUNTA BASE BOMBA	CASE PANEL GASKET	GUARNIZIONE BASE POMPA	JOINT DE BASE
7	REC09168-10034	09168-10034	JUNTA	GASKET	GUARNIZIONE	JOINT
8	PAF25-00000014	09202-08006	PIN CENTRADOR F8x12	PIN, DOWEL F8x12	PIN, CENTRAGGIO F8x12	GOUPILLE FENDUE 8x12
9	REC57630-92E00	57630-92E00	KIT CIERRE HELICE	PROP NUT KIT	KIT CHIUSURA ELICA	KIT ECROU D'HELICE
10	REC90171-18M04	90171-18M04	TUERCA	NUT	DADO	ÉCROU
11	REC91490-40030	09204-03003	PIN BLOQUEADOR	COTTER PIN	COPPIGLIA	GOUPILLE

KITS JUNTAS Y RETENES — SEALS KITS — KIT GUARNIZIONE E TENUTE — KITS JOINTS D'EMBASES

new

REF	OEM
REC25700-87E00	25700-87E00

DF60, DF70 W-K9 (1998-09)
DT90, DT100L-Y (1990-00)

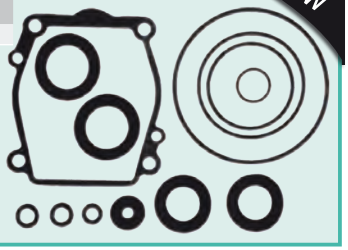

new

REF	OEM
REC25700-87L00	25700-87L00

DF70A, DF80A, DF90A (2009+)

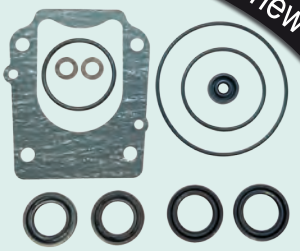

new

REF	OEM
REC25700-93L00	25700-93L00

DF250AP, DF300AP

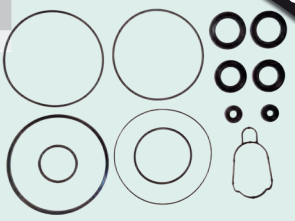

REF	OEM
REC25700-92J00	25700-92J00

DF100A, DF115A, DF140A (2013+)
DF140 (2002-12)

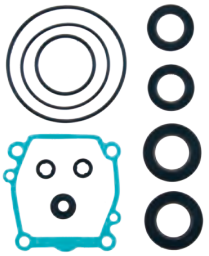

REF	OEM
REC25700-95D01	25700-95D01 25700-95D00

DF25, DF30Y-K6 (2000-06)
DT25C, DT30C-K-Y (1989-00)



REF	OEM
REC25700-87D00	25700-87D00

DT150, DT200,
DT225W-K3 (1998-03)
V6H-Y (1987-00)

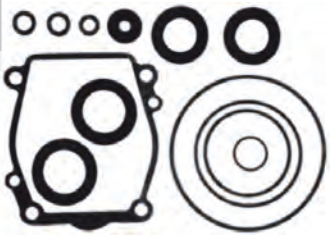

REF	OEM
REC25700-88L00	25700-94400 25700-88400

DF40, DF50X-K10 (1999-10)
DF40A, DF50A, DF60A (2010+)



REF	OEM
REC25700-93J00	25700-93J00

DF150, DF175T/Z (G) (2006-14)
DF200, DF225, DF250 (2004+)
DF200A (2015)



REF	OEM
REC25700-99E00	25700-99E00

DF40A, DF50A,DF60A (2014+)
DF60, DF70W-K9 (1998-09)

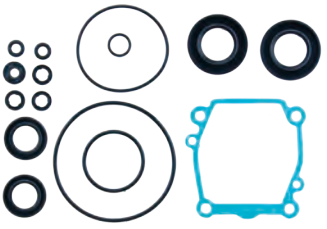

REF	OEM
REC25700-94700	25700-94700

DT55, DT65J-X (1988-99)



REF	OEM
REC25700-95J00	25700-95J00

DF20R, DF25, DF25R-V2 (2006-11)

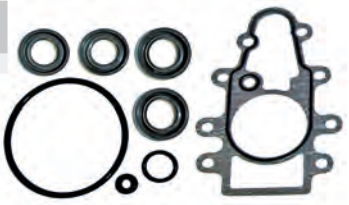

REF	OEM
REC25700-95501	25700-95500

DT75, DT85J-Y (1988-00)



REF	OEM
REC25700-98J00	25700-98J00

DF300T/Z (2007-11)

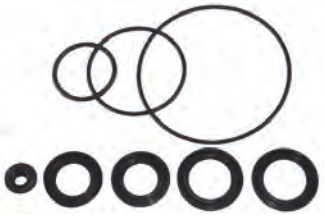

REF	OEM
REC25700-94500	25700-94500

DT115, DT140G-Y (1986-00)

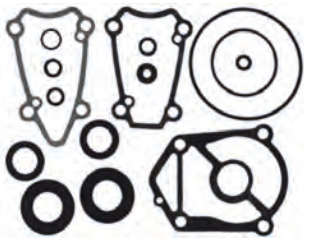

REF	OEM
REC25700-90J01	25700-90J01

DF90, DF100, DF115 K1-K11 (2001-11)
DF115WT, DF140WT-K3 (2003)

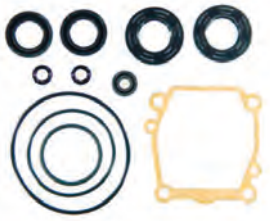

GUÍA KITS DE JUNTAS — GUIDE OF GASKETS KITS — GUIDA KIT GUARNIZIONE — GUIDE DES KITS JOINTS

		REF
DT25C DT30C		REC25700-95D01
DT55 DT65		REC25700-94700
DT75 DT85		REC25700-95501
DT115 DT140		REC25700-94500
V6 2-STROKE	1989-03	REC25700-87D00
DF25 DF30	~~V-TWIN~~	REC25700-95D01
DF25	V-TWIN	REC25700-95J00

		REF
DT40C DF40 DF50 DF40A DF50A DF60A		REC25700-88L00
DF60 DF70 V4	1989-00	REC25700-87E00
DF60 DF70	2001-10	REC25700-99E00
DF70A DF80A DF90A	2009+	REC25700-87L00

	REF
DF90 DF100 DF115	REC25700-90J01
DF115A DF140	REC25700-92J00
DF150 DF175 DF200 DF225/ DF250	REC25700-93J00
DF250SS DF300	REC25700-98J00
DF250AP DF300AP	REC25700-93L00

FUELLES VARILLA DE CAMBIO — SHIFT, BELOW — MANICOTTO MARCE — SOUFFLET DU LEVIER DE CHANGEMENT DE VITESSE

new

REF	OEM
REC25222-93901	25222-93901

DF4, DF5, DF6 (2002-12)
DF9.9, DF15 (1996-12)
DT7, DT5 (1988-01)
DT9.9, DT15 (1986-04)



new

REF	OEM
REC25222-96300	25222-96300

DF25, DF30 Y-K6 (2000-06)
DT20, T25, DT30 (1986-02)
DT40C-W G-X (1986-99)



ARO TÓRICO VARILLA DE CAMBIO — SHIFT, O-RING — O-RING MARCE — JOINT TORIQUE DU LEVIER

new

REF	OEM	
REC09280-08005	09280-08005	1,8 x 7.7 mm

DF20R, DF25RVZ (2006-13)
DF25, DF30Y-K6 (2000-06)
DF40, DF50X-K10 (1999-10)
DF40A, DF50A, DF60A (2010+)
DT20, DT25, DT30G-Y (1986-00)
DT25, DT30 K1-K2 (2001-02)
DT40C-W G-X (1986-99)
DT55, DT60J-Z (1988-99)
DT75, DT85J-Y (1988-00)



new

REF	OEM	
REC09280-11005	09280-11005 09280-11001	2.4 x 10.8 mm

DF40, DF50X-K10 (1999-10)
DF40A, DF50A, DF60A (2010+)
DF70A, DF80A, DF90A (2009+)
DF100B (2018+)
DT40C-W G-X (1986-99)
DT4W K1-K4 (2001-04)
DT55, DT65J-X (1988-99)
DT75, DT85J-Y (1988-00)



TUERCA VARILLA DE CAMBIO — TURNBUCKE CLUTCH ROD — DADO ASTA CAMBIO — ECROU DU LEVIER DE CHANGEMENT DE VITESSE

REF	OEM
REC23311-95DL0	23311-95DL0

DF25, DF30Y-K6 (2000-06)
DF40, DF50X-K10 (1999-10)
DF9.9, DF15T-K3 (1996-03)
DF9.9, DF15 (R) (2004-11)
DT9.9, DT40



TUBO DRENAJE BOMBA DE AGUA | DRAIN EATER TUBE | TUBO DRENAGGIO ACQUA | TUBE DE VIDANGE DE LA POMPE A EAU

new

REF	OEM
REC17453-93901	17453-93900 17453-93901

DT15C (1989-97)
DT9.9, DT15 K1-K4 (2001-04)
DT9.9K, DT15K G-Y (1986-00)
DF15 (2012)
DF9.9, DF15T-K3 (1996-03)
DF9.9, DF15(R) (2004-11)



new

REF	OEM
REC17431-92L20	17431-92L20 17431-94441 17431-94440

DT40C-W G-X (1986-99)
DT40W K1-K4 (2001-04)



new

REF	OEM
REC17560-91L00	17560-91L00 17560-96304 17560-96301 17560-96300

DT20, DT25, DT30G-Y (1986-00)
DT25, DT30 K1-K2 (2001-02)

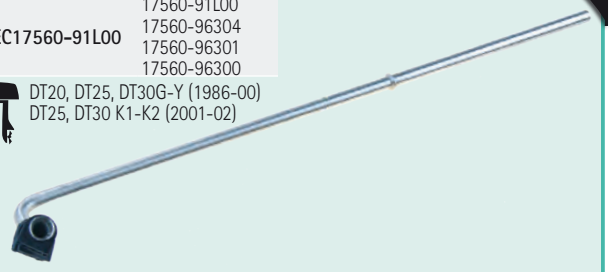

TORNILLOS Y JUNTAS DE DRENAJE | DRAIN, SCREW AND GASKETS | VITI E GUARNIZIONE, DRENAGGIO | VIS ET JOINTS DE VIDANGE

new

REF	OEM	
REC09248-10008	09248-10008	10 x 7.2 mm



new

REF	OEM
REC09168-10034	09168-10034

DF70 --> DF350



new

REF	OEM
REC55128-93J10	55128-93J00 55128-93J10

DF70 --> DF300



new

REF	OEM
REC59178-97J00	59178-97J00

DF2.5 --> DF30



DIÁBOLO | DIAVOLO | DIAVOLO | DIABOLO

new

REF	OEM
REC56120-93900	56120-93900-0EP 56120-93901-0ED 56120-93900-002M 56120-90L00-0EP 56120-90L01-0EP 56120-90L02-0EP

DF9.9, DF15T-K3 (1996-03)
DF9.9, DF15(R) (2004-12)
DF9.9, DT15K1-K4 (1986-04)
DT15 (1989-97)



new

REF	OEM
REC56120-96332-0EP	56120-96332-0EP

DF20R, DF25, DF25RVZ (2006-11)
DF25, DF30Y-K6 (2000-06)
DT25, DT30K1-K2 (2001-02)



new

REF	OEM
REC56120-94321-0EP	56120-94321-0EP

DF40, DF50X-K10 (1999-10)
DF40A, DF50A, DF60A (2010-16)
DT40W-K1-K4 (2001-04)



ARO TÓRICO DEL DIÁBOLO | DIAVOLO, O-RING | O-RING DIAVOLO | JOINT TORIQUE DU DIABOLO

new

REF	OEM	
REC09280-57002	09280-57002	3.5 x 65.2 mm

DF15 (2012)
DF8A, DF9.9A (AR) (2010+)
DF9.9, DF15T-K3 (1996-03)
DF9.9, DF15(R) (2004-11)
DF9.9B, DF15A, DF20A (2013+)
DT15C (1989-97)
DT9.9, DT15 K1-K4 (2001-04)
DT9.9K, DT15K-G (1986-00)



new

REF	OEM	
REC09280-75001	09280-75001	3.3 x 75 mm

DF40, DF50X-K10 (1999-10)
DF40A, DF50A, DF60A (2010+)
DT40C-W G-X (1986-99)
DT40W K1-K4 (2001-04)

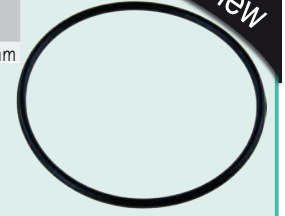

SELECTOR CLUTCH DOGS SELETTORE CRABOT

SELECTOR CLUTCHS DOGS SELETTORE CRABOT

new

REF	OEM
REC57621-94403	57621-94400 57621-94403 57621-87J03 57621-87J00 57621-87J01 57621-87J02

DT40C-W G-X (1986-99)
DT40W K1-K4 (2001-04)
DF40, DF50X-K10 (1999-10)
DF40A, DF50A, DF60A (2010+)



new

REF	OEM
REC57621-91L10	57621-91L10 57621-96300 57621-96310

DT20, DT25, DT30G-Y (1986-00)
DT25, DT30K1-K2 (2001-02)
DT25C, DT30C K-Y (1989-00)
DF25A, DF30A (2015)



MUELLE PARA SELECTOR SPRING CLUTCH MOLLA SELETTORE RESSORT DE SELECTEUR

new

REF	OEM
REC09440-32008	09440-32008

DF9.9, DF15TK3 (1996-03)
DF9.9, DF15(R) (2004-11)
DF15 (2012)
DT15C (1989-97)
DT9.9, DT15 K1-K4 (2001-04)
DT9.9K, DT15K G-Y (1986-00)



new

REF	OEM
REC09440-08043	09440-08043

DF40, DF50X-K10 (1999-10)
DF40A, DF50A, DF60A (2010+)



new

REF	OEM
REC09440-40002	09440-40002

REC57621-94403

DF40, DF50X-K10 (1999-10)
DF40A, DF50A, DF60A (2010+)
DT40C-W G-X (1986-99)
DT40W K1-K4 (2001-04)
DT55, DT60J-X (1988-99)





new

REF	OEM
REC09440-05027	09440-05027

DF9.9, DF15T-K3 (1996-03)
DF9.9, DF15(R) (2004-11)
DT15C (1989-97)
DT8, DT9.9C J-V (1988-97)
DT9.9, DT15 K1-K4 (2001-04)
DT9.9, DF15K G-Y (1986-00)



PIN PIN SPINOTTO PIN

new

REF	OEM
REC57632-97L00	57632-97L00 57632-98500 57632-98501

DF15 (2012)
DF4, DF5, DF6 (2002-15)
DF8A, DF9.9A (AR) (2010+)
DF9.9, DF15T-K3 (1996-03)
DF9.9, DF15(R) (2004-11)
DT15C (1989-97)
DT4-J4, DT5Y (1988-00)
DT5, DT6, DT8G-Y (1986-00)
DF9.9B, DF15A, DF20A (2013+)



new

REF	OEM
REC09202-05022	09202-05022

DF40, DF50X-K10 (1999-10)
DF40A, DF50A, DF60A (2010+)
DT40C-W G-X (1986-99)
DT40W K1-K4 (2001-04)



PASADOR PARA SELECTOR CLUTCH PIN PIN SELETTORE PIVOT

new

REF	OEM
REC57634-88L00	57634-88L00

DF40, DF50X-K10 (1999-10)
DF40A, DF50A, DF60A (2010+)



new

REF	OEM
REC09209-08016	09209-08016

DF20R, DF25, DF25RVZ (2006-13)
DF25, DF30Y-K6 (2000-06)
DF25A, DF30A (2015+)
DT20, DT25, DT30G-Y (1986-00)
DT25, DT30 K1-K2 (2001-02)
DT25C, DT30C K-Y (1989-00)



VARILLA PARA SELECTOR | ROD PUSH | ASTA PRESSIONE | TIGE DE POUSSEE

new

REF	OEM
REC57631-93901	57631-93901

DF15 82012)
DF8A, DF9.9A 8AR) (2010+)
DF9.9, DF15(R) (2004-11)
DF9.9B, DF15A, DF20A (2013+)
DT15C (1989-97)
DT9.9, DT15 K1-K4 (2001-04)
DT9.9K, DT15K G-Y (1986-00)



new

REF	OEM
REC57631-96301	57631-96301

DF25, DF30Y-K6 (2000-06)
DT20, DT25, DT30G-Y (1986-00)
DT25, D30 K1-K2 (2001-02)
DT25C, DT30C K-Y (1989-00)



new

REF	OEM
REC57631-95303	57631-95303 57631-94700 57631-95302 57631-95301

DF40, DF50X-K10 (1999-10)
DF40A, DF50A, DF60A (2010+)
DT40C-W G-X (1986-99)
DT40W K1-K4 (2001-04)
DT55, DT65J-X (1988-99)



EXTREMO PARA SELECTOR | ARM, CLUTCH | HEBEL | EMBOUT DE SELECTEUR

REF	OEM
REC23211-94401	

DT25C, DT30C-K-Y (1989-00)
DT40C-W G-X (1986-99)
DT40W-K1K4 (2001-04)



RODAMIENTOS | BEARING | CUSCINETTO | ROULEMENT

BOMBA DE ACEITE | OIL PUMP | POMPA OLIO | DE POMPE À HUILE

new

REF	OEM
REC08110-60020	08110-60020

DF150 --> DF350



BOMBA DE AGUA | WATER PUMP | POMPA ACQUA | ROULEMENT DE POMPE À EAU

new

REF	OEM
REC09263-25062	09263-25062

DF40, DF40X-K10 (1999-10)
DT40C-W G-X (1986-99)
DT40W K1-K4 (2001-04)



new

REF	OEM
REC09263-25025	09263-25025 09263-25048 09263-25L02



CIRCLIP, BOMBA DE AGUA / CLIP / CLIP / CLIPS

REF	OEM
REC09380-15001	09380-15001

DF8A, DF9.9A (AR) (2010+)
DF9.9B, DF15A, DF20A (2015+)
DT9.9, DT15 (1989-04)



EJE TRANSMISIÓN SUPERIOR / UPPER, DRIVE SHAFT / ALBERO DI TRASMISSIONE SUPERIORE / SUPERIEUR D'ARBRE DE TRANSMISSION

REF	OEM
REC08110-60020	08110-60020

DF8 --> DF20
DT9.9, DT15



REF	OEM
REC09265-17002	09265-17002

DT20R, DF25, DF25V2 (2006-13)
DF25, DF30Y-K6 (2000-06)
DF25A, DF30A (2015+)
DT20, DT25, DF30G-Y (1986-00)
DT25, DT30 K1-K2 (2001-02)
DT25C, DT30C K-Y (1989-00)



EJE TRANSMISIÓN INFERIOR / LOWER, DRIVE SHAFT / ALBERO DI TRASMISSIONE INFERIORE / INFERIEUR D'ARBRE DE TRANSMISSION

REF	OEM
REC09263-22L03	09263-22L03 09263-22039

DF40A, DF50A, DF60A (2010-19)
DF40, DF50X-K10 (1999-10)
DT40C-W G-X (1986-99)
DT40W K1-K4 (2001-04)



REF	OEM
REC09263-20046	09263-20046

DF20R, DF25, RVZ (2006-13)
DF25 (R) QVZ (2013)
DF255, DF30Y K-6 (200-06)
DF25A, DF30A (2015+)
DT20, DT25, DT30G-Y (1986-00)
DT25,DT30 K1-K2 (2001-02)
DT25C, DT30K-Y (1989-00)



REF	OEM
REC09263-15019	09263-15019

DF15 (2012) 01503F
DF9.9, DF15T-K3 (1996-03)
DF9.9, DF15(R) (2004-11)
DT15C (1989-1997)
DT5, DT6, DT8 G-Y (1986-00)
DT6, DT8 Y-K2 (2000-02)
DT9.9, DT15 K1-K4 (2001-04)
DT9.9K, DT15K G-Y (1986-00)



DIÁBOLO / DIAVOLO / DIAVOLO / DE DIABOLO

REF	OEM
REC08110-60050	08110-60050

DF8A, DF9A (2012+)
DF9.9, DF15 (1996-2012)
DF9.9B, DF15A, DF20A (2015+)
DT9.9, DT15 (1986-04)



REF	OEM
REC08113-60060	08113-60060

DF25A, DF30A (2015+)
DF20R, DF25RVZ (2006-11)
DF25, DF30Y-K6 (2000-06)
DT20, DT25, DT30 (1986-02)



REF	OEM
REC09263-20047	09263-20047

DF25A, DF30A (2015+)
DF25, DF30Y-K6 (2000-06)
DF25, DF25R, DF25QVZ (2013)
DF20R, DF25, DF25RVZ (2006-11)
DT20, DT25, DT30G-Y (1986-00)
DT25, DT30 K1-K2 (2001-02)
DT25C, DT30C K-Y (1989-00)



REF	OEM
REC09263-22020	09263-22020

DF40A, DF50A, DF60A (2010+)
DF40, DF50X-K10)1999-10)
DT40C-W G-X (1986-99)
DT40W K1-K4 (2001-04)
DT55, DT65 J-X (1988-99)



PIÑÓN DE ATAQUE — INITIATIVE GEAR — PIGNONE ATTACCO — PIGNON D'ATTAQUE

new

REF	OEM
REC09263-20L04	09263-20L04 09263-20024

DF8A /AR, DF9.9A/AR (2013-16)
DF9.9B, DF15A, DF20A (2013-16)



new

REF	OEM
REC57311-98600	57311-98601 57311-98600

DF4, DF5, DF6 (2002-11)
DT4-J4, DT5Y (1988-00)
DT4 K1 (2001)
DT5Y (1998-02)



new

REF	OEM
REC57311-96311	57311-96310 57311-96311 57311-96320 57311-91L00

DT20, DT25, DT30 (1986-06)
DF20, DF25 (RVZ) (2006-13)



new

REF	OEM
REC57311-93910	57311-93910 57311-90L00

DT9.9, DT15 (2001-04)
DF9.9, DF15 (1996-04)



new

REF	OEM
REC57311-99J10	57311-99J10

DF8A, DF9.9A (AR) (2012+)
DF9.9B, DF15A, DF20A (2013+)



new

REF	OEM
REC57311-94402	57311-94401 57311-94402

DT40 (1986-04)



new

REF	OEM
REC57311-93901	57311-93901

DT415C (1989-97)



PIÑÓN MARCHA AVANTE — POSITIVE GEAR — PIGNONE MARCIA AVANTI — PIGNON DE MARCHE AVANT

new

REF	OEM
REC57510-91J00	57510-91J00 57510-98600 57510-98610 57510-98611

DT4/J4, DT5Y (1988-00)
DT4 K1 (2001)
DT5Y (1998-02)
DF4, DF5, DF6 (2002+)



new

REF	OEM
REC57510-93902	57510-93902

DT15C (1989-97)



new

REF	OEM
REC57510-94402	57510-94402 57510-94401 57510-94400

DT40 (1986-04)



new

REF	OEM
REC57510-89J00	57510-89J00 57510-91L00

DT25, DT30 (2001-02)
DF25, DF30 (2000-06)
DF20R, DF25 (R) (VZ) (2006-13)



new

REF	OEM
REC57510-93910	57510-93910 57510-90L00

DT9.9, DT15 (2001-04)
DF9.9, DF15 (1996-11)



PIÑÓN MARCHA ATRÁS — REVERSE GEAR

REF	OEM
REC57521-91J00	

DF4, DF5, DF6 (2002-15)
DT4/J4, DT5Y (1988-00)
DT4K1 (2001)
DT5Y (1998-02)



REF	OEM
REC57521-93902	57521-93902 57310-93850

DT15C (1989-97)



REF	OEM
REC57521-94400	57521-94400 57310-94401

DT40 (1986-04)



PIGNONE MARCIA INDIETRO — PIGNON DE MARCHE ARRIERE

REF	OEM
REC57521-89J00	57521-89J00

DF25, DF30 82000-06)
DF20R, DF25 (R,Q) (VZ) (2006-13)



REF	OEM
REC57521-93910	57521-93910 57521-90L00

DF9.9, DF15 (1996-11)
DT9.9, DT15 (2001-04)



REF	OEM
REC57521-96312	57521-96312 57521-96311

DT20, DT25, DT30 (1986-02)



ARANDELA / GRUESOS — WASHER / SHIM

REF	OEM	
REC09160-26015	09160-26015	26.2 x 42 x 4.0 mm

DF40, DF50X-K10 (1999-10)
DT40C-W G-X (1986-99)
DT40W K1-K4 (2001-04)



REF	OEM
REC09160-20027	09160-20027

DF9.9 (2004-10)
DT15, DF15 (1983-15)
DF20 (2011-15)
DF8A/AR, DF9.9A/AR (2010+)
DF9.9B, DF15A, DF20A (2013+)



REF	OEM	
REC09160-20041	09160-20041	T: 1.0

DT9.9 (1983-87)
DT15 (1983-97)



RONDELLA / SPESSORE — RONDELLE / CALE

REF	OEM	
REC09160-21009	09160-21009	21 x 35 x 2.75 mm

DF8A, DF8AR, DF9.9A, DF9.9AR (2010+)
DF9.9, DF15T-K3 (1996-03)
DF15 (2012)
DF9.9, DF15(R) (2004-11)
DF9.9B, DF15A, DF20A (2013)
DT9.9K, DT15G-Y (1986-00)
DT15C (1989-97)
DT9.9, DT15K1-K4 (2001-04)



REF	OEM	
REC09160-20042	09160-20042	T:1.1
REC09160-20043	09160-20043	T:1.2
REC09160-20044	09160-20044	T:0.7

DF8A, DF8AR, DF9.9A, DF9.9AR (2010+)
DF9.9, DF15T-K3 (1996-03)
DF15 (2012)
DF9.9, DF15(R) (2004-11)
DF9.9B, DF15A, DF20A (2013)
DT9.9K, DT15G-Y (1986-00)
DT15C (1989-97)
DT9.9, DT15K1-K4 (2001-04)



SISTEMA DE PROPULSIÓN
PROPULSION SYSTEM
SISTEMA DI PROPULSIONE
SYSTEME DE PROPULSION

HÉLICES ALUMINIO E INOXIDABLE DE 3 Y 4 PALAS
3 & 4 BLADE ALUMINIUM & SS PROPELLERS
ELICHE ALLUMINIO E INOX DA 3 E 4 PALE
HELICE ALUMINIUM ET INOX 3 ET 4 PALES

CÓDIGO DE REFERENCIAS — PART NO. CODING SYSTEM — SISTEMA DI CODICE — CODAGE DES REFERENCES

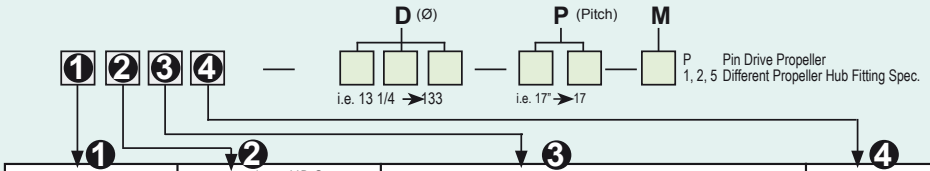

1	2	3	4
1. Mercury, Mariner **2.** Johnson, Evinrude **3.** Yamaha **4.** Suzuki **5.** Tohatsu **6.** **7.** **8.** Volvo Penta **9.** Rubex System	0.5,6,8 and 9.8 HP Group **1.** A Group **2.** B Group **3.** C Group **4.** D Group **5.** E Group **6.** F Group **7.** VP (Std. Hub) **8.** VP (Long Hub)	**1.** AL **2. Saturn** (INOX | Stainless Steel) **3. New Saturn** (INOX | Stainless Steel) **4. Titan** (INOX | Stainless Steel) **5. HR Titan** (INOX | Stainless Steel) **6. Scorpion** (INOX | Stainless Steel) **7. Lexor** (INOX | Stainless Steel)	**1.** 3R Rubber Hub **2.** 3L Rubber Hub **3.** 4R Rubber Hub **4.** 4L Rubber Hub

SOLAS

AMITA 3

SOLAS

Hélice de aluminio con núcleo de goma de gran resistencia.

Aluminum propeller with heavy duty rubber hub.

Eliche di alluminio con mozzi in gomma ad alta resistenza.

Hélice en aluminium avec moyeu en caoutchouc



AMITA 4

SOLAS

Hélices de aluminio con núcleo de goma de gran resistencia. Van muy suaves a poca velocidad y hace el barco muy manejable con la mar picada.

Aluminum propeller with heavy duty rubber hub. Smoother low speed makes the offshore boating activity much easier.

Eliche di alluminio con mozzo in gomma ad alta resistenza. Molto morbido a bassa velocità e rende la barca molto maneggevole con mare cattivo.

Hélice en aluminium avec moyeu en caoutchouc. Permet d'aller doucement à basse vitesse et rende le bateau très maniable lorsque la mer est agitée



LEXOR

SOLAS

Hélices de acero inoxidable. Gran diámetro del área de las palas para barcos pesados. Gran rendimiento en alta velocidad sin sacrificar las velocidades medias. Excelente ahorro de combustible.

Stainless steel propeller. Large diameter and blade area for big boat loads. Great high speed performance sithout sacrificing mid-range speeds. Excellent fuel economy.

Eliche di acciaio inox. Grande diametro delle pale per imbarcazioni pesanti. Grandi prestazioni ad alta velocità senza sacrificare velocità medie. Eccellente risparmio di carburante.

Hélice inox, grand diamètre pour bateaux lourds. Excellentes performances à grande vitesse sans sacrifier les vitesses moyennes. Excellente économie de carburant.



NEW SATURN

SOLAS

Hélices de acero inoxidable. Ofrece buena aceleración y rendimiento. Tamaño más pequeño que ofrece un diámetro extragrande.

Stainless steel propeller. Offers good acceleration & all-round performance. Smaller pitch sizes offered in extra large diameter with increased blade area.

Eliche di acciaio inox. Buona accelerazione. Piccole dimensione che offre un più grande diametro.

Hélice inox, offrant de bonnes accélérations et performances. Taille de pas reduite pour les modèles de grands diamètres avec une surface de pale plus importante.



HR TITAN 3 PROP

SOLAS

Hélice de acero inoxidable. Alto rendimiento para cascos de alta velocidad.
La inclinación de la hoja proporciona un excelente elevación de proa y aceleración.
El diseño de copa grande aumenta la mordida y reduce el deslizamiento.

Stainless steel propeller. Performance prop for high speed planning hulls. High rake blade design provides excellent bow lift and acceleration. Heavy cup design increases bite and reduces slip.

Eliche in acciaio inox. Alte prestazioni per scafi ad alta velocità. Il passo della pala fornisce un'eccellente spinta e accelerazione. Il disegno aumenta le prestazioni.

Hélice en acier inoxydable. Hélice de performance pour les coques de planification à grande vitesse. La conception de la lame à haut râteau offre une excellente portance et accélération de l'arc. La conception lourde de la tasse augmente la morsure et réduit le glissement.



GUÍA DE HÉLICES CON NÚCLEO INTEGRADO — PROPELLERS APPLICATION WITH RUBBER HUB — GUIDA ELICHE CON MOZZO — GUIDE DES HELICES ET MOYEUX

	2T STROKES	4T STROKES	R.O. OEM	A	B	D	P	R	AL AMITA 3	AL AMITA 4	INOX STAINLESS STEEL NEW SATURN	INOX LEXOR	INOX HR TITAN 3
DF4 DF5 DF6 (2004+)		✓	58110-91JN0-019	10	3	8	7	R	SOL4011-079-07S				
DT9.9 (1983-97) DT15 (1983-97) DF8 (2010+) DF9.9 (1996+) DF15 (1996+) DF20 (2013+)	✓	✓	58100-89L00-019	10	3	9,25	7	R	SOL4111-093-07A				
			58100-90L41-019				8		SOL4111-093-08A				
			58100-89L20-019				9		SOL4111-093-09A				
			58100-89L60-019				10		SOL4111-093-10A				
			58100-89L70-019				11		SOL4111-093-11A				
			58100-89L50-019				12		SOL4111-093-12A				
DT20 DT25/C DT30/C DF25 DF30 Thru-Hub	✓		58100-96410-019	10	3	10 1/4	10	R	SOL4211-110-09				
			58100-96420-019				11		SOL4211-105-11				
			58100-96430-019				12		SOL4211-103-12				
			58100-96440-019				13		SOL4211-101-13				
			58100-95D00-019				14		SOL4211-100-14				
			58100-96460-019				15		SOL4211-100-15				
DT35 DT40 DT50 DT55 DT60 DT65 DF40 DF50 DF60 (2010+)	✓	✓	58100-94302-019	13	3	11 1/2	9	R	SOL4311-121-09				
			58100-95212-019			11 1/2	10		SOL4311-120-10				
			58100-95222-019			11 1/2	11		SOL4311-118-11				
			58100-95393-019			11 5/8	12		SOL4311-116-12				
			58100-94313-019			11 1/2	13		SOL4311-116-13				
			58100-95353-019			11 3/8	14		SOL4311-116-14				
			58100-95363-019			11	15		SOL4311-110-15				
DT75 DT85 DT90 DT100 DT115 DT140 DF60 DF70 (1998-08) Thru-hub	✓	✓		13	3	14	11	R	SOL4411-140-11				
						13 3/4	13		SOL4411-138-13	SOL4413-133-13			
			58100-94500-019			13 1/2	15		SOL4411-135-15	SOL4413-130-15	SOL4431-135-15		
			58100-94512-019			13 1/4	17	V1500	SOL4411-133-17	SOL4413-128-17	SOL4431-133-17		
			58100-94522-019			13	19	V1700	SOL4411-130-19	SOL4413-125-19	SOL4431-130-19		
			58100-94532-019			13	21	V1900	SOL4411-130-21	SOL4413-125-21	SOL4431-130-21		
			58100-95511-019			13 1/4	17	V2100			SOL2431-135-15		
			58100-95521-019			13	19	U1700			SOL2431-133-17		
			58100-95530-019			13	21	U1900			SOL2431-130-19		
			58100-94554-019			13 1/2	15	U2100			SOL4431-135-15		
			58100-94581-019			13 1/4	17				SOL4431-133-17		
			58100-94561-019			13	19				SOL4431-130-19		
			58100-94571-019			13	21				SOL4431-130-21		
			99105-00100-16P			13 1/4	16				SOL4431-135-15		
			99105-00100-18P			13 1/4	18				SOL4431-133-17		
			99105-00100-20P			13 1/4	20				SOL4431-130-19		
			99105-00100-22P			13 1/4	22				SOL4431-130-21		
DF70A DF80A DF90 DF115 DF140 Thru-hub		✓	58100-90J40-019	15	3	15	15	R		SOL3413-138-15			
			58100-90J00-019			14 3/4	17	R	SOL3411-139-17	SOL3413-138-17			SOL3451-139-17
			58100-90J10-019			14 1/2	19	R	SOL3411-139-19	SOL3413-138-19			SOL3451-139-19
			58100-90J20-019			14 1/4	21	R	SOL3411-139-21	SOL3413-138-21			SOL3451-139-21
			58100-90J22-019			14	23	R					SOL3451-139-23
			99105-00700-18P				18	R					SOL3451-139-17
			99105-0070L-18P				18	L					SOL3452-139-17
			99105-00700-20P				20	R					SOL3451-139-19
			99105-0070L-20P				2	L					SOL3452-139-19
			99105-00700-22P				22	R					SOL3451-139-21
			99105-0070L-22P				22	L					SOL3452-139-21
			99105-00700-24P				24	R					SOL3451-139-23

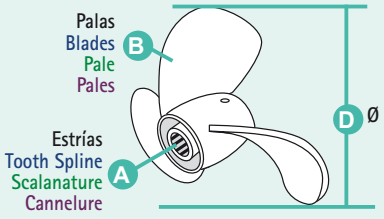

P Paso
Pitch
Passo
Pas

R Rotación L (izquierda) R (derecha)
Rotation L (left) R (Right)
Rotazione L (SX) R (DX)
Rotation L (gauche) R (droit)

	2T STROKES	4T STROKES	R.O. OEM	A	B	D	P	R	AL		INOX STAINLESS STEEL		
									AMITA 3	AMITA 4	NEW SATURN	LEXOR	HR TITAN 3
DT150 DT175 DT200 DT225 Thru-hub			58200-87D61-019	15	3	14 1/2	16	R		SOL4513-148-15			SOL4551-148-16
			58200-87D62-019			14 1/2	16	L					SOL4552-148-16
			58200-87D01-019			14 1/2	18	R		SOL4513-145-17			SOL4551-148-18
			58200-87D02-019			14 1/2	18	L					SOL4552-148-18
			58200-87D11-019			14 1/2	20	R		SOL4513-143-19			SOL4551-148-20
			58200-87D12-019			14 1/2	20	L					SOL4552-148-20
			58200-87D21-019			14 1/2	22	R		SOL4513-140-21			SOL4551-143-22
			58200-87D22-019			14 1/2	22	L					SOL4552-143-22
			99105-00200-16P			15-14 1/4	15-16	R	SOL4511-150-15				SOL4551-148-16
			99105-0020L-16P			15-14 1/4	15-16	L	SOL4512-150-15				SOL4552-148-16
			99105-00200-18P			14.8-14 1/4	18	R	SOL4511-148-17				SOL4551-148-18
			99105-0020L-18P			14.8-14 1/4	18	L	SOL4512-148-17				SOL4552-148-18
			99105-00200-20P			14.5-14 1/4	20	R	SOL4511-145-19				SOL4551-148-20
			99105-0020L-20P			14.5-1 1/4	20	L	SOL4512-145-19				SOL4552-148-20
			99105-00200-22P			14.3-14 1/4	22	R	SOL4511-143-21				SOL4551-143-22
			99105-0020L-22P			14.3-14 1/4	22	L	SOL4512-143-21				SOL4552-143-22
			99105-00200-24P			14.2-14 1/4	23-24	R	SOL4511-142-23				SOL4551-140-24
			99105-0020L-24P			14.2-14 1/4	23-24	L	SOL4512-142-23				SOL4552-140-24
DF150 DF175 DF200 DF225 DF250 DF300			99105-00200-16P	15	3	15.8	15	R	SOL4511-150-15				
						15.8	15	L	SOL4512-158-15				
			99105-00200-18P			15.5	17	R	SOL4511-155-17				
						15.5	17	L	SOL4512-155-17				
						15 3/8	18	R				SOL4571-154-18	
						15 3/8	18	L				SOL4572-154-18	
			99105-00200-20P			15.3	19	R	SOL4511-153-19				
						15.3	19	L	SOL4512-153-19				
						15 1/8	20	R				SOL4571-151-20	
						15 1/8	20	L				SOL4572-151-20	
			99105-00200-22P			15.3	21	R	SOL4511-153-21				
						15.3	21	L	SOL4512-153-21				
						14 7/8	22	R				SOL4571-149-22	
						14 7/8	22	L				SOL4572-149-22	
						14 3/4	23	R				SOL4571-148-23	
						14 3/4	23	L				SOL4572-148-23	

NÚCLEO INTERCAMBIABLE INTERCHANGEABLE HUB MOZZO INTERCAMBIABILE MOYEU INTERCHANGEABLE

	2T STROKES	4T STROKES	A	REF	
DT50, DT50M (1983-84) DT55 (1985-97) DT60 (1983-84) DT65 (1985-97)			13	SOLRBX-115	C
DF70A, DF80A, DF90A (2009+)		✓	15	SOLRBX-150	D
DF90, DF115 (2001+)		✓	15	SOLRBX-125	D
DF140 (2001+)		✓	15	SOLRBX-126	D
75-140 HP DF60, DF70 (1979+)			13	SOLRBX-110	D
DT150-225 HP (1986+) DF150-300 HP	✓	✓	15	SOLRBX-104	E



HÉLICES PARA NÚCLEO INTERCAMBIABLE — PROPELLERS FOR INTERCHANGEABLE HUB — ELICHE PER MOZZO INTERCAMBIABILE — HELICES AVEC MOYEU INTERCHANGEABLE

	B	D	P	R	AL
C 30-75 HP	3	12.1	9	R	SOL9311-121-09
		12	10	R	SOL9311-120-10
		11.6	11	R	SOL9311-116-11
		11.4	12	R	SOL9311-114-12
		11.1	13	R	SOL9311-111-13
		11.1	14	R	SOL9311-111-14
		11	15	R	SOL9311-110-15
D 40-140 HP	3	14	9	R	SOL9411-140-09
		14	11	R	SOL9411-140-11
		13.75	13	R	SOL9411-138-13
		13.50	15	R	SOL9411-135-15
		13.25	17	R	SOL9411-133-17
		13.2	19	R	SOL9411-132-19
		13.2	21	R	SOL9411-132-21
E 135-350 HP	3	15.5	11	R	SOL9511-155-11
		15.3	13	R	SOL9511-153-13
		16	13	R	SOL9511-160-13
		15	15	R	SOL9511-150-15
		15	15	L	SOL9511-150-15
		14.8	17	R	SOL9511-148-17
		14.8	17	L	SOL9511-148-17
		14.5	19	R	SOL9511-145-19
		14.5	19	L	SOL9511-145-19
		14.3	21	R	SOL9511-143-21
		14.3	21	L	SOL9511-143-21

RUBEX



Núcleo intercambiable (no incluido).
Interchangeable hub (not included).
Mozzo intercambiabile (non incluso).
Moyeu interchangeable (non inclus)

	B	D	P	R	INOX STAINLESS STEEL
C 30-75 HP	3	11 5/8	11	R	SOL9331-116-11
		11 3/8	12	R	SOL9331-114-12
		11 1/8	13	R	SOL9331-111-13
		11 1/8	14	R	SOL9331-111-14
		11	15	R	SOL9331-110-15
D 40-140 HP	3	13 3/4	13	R	SOL9431-138-13
		13 3/4	13	L	SOL9432-138-13
		13 1/2	15	R	SOL9431-135-15
		13 1/2	15	L	SOL9432-135-15
		13 1/4	17	R	SOL9431-133-17
		13 1/4	17	L	SOL9432-133-17
		13	19	R	SOL9431-130-19
		13	19	L	SOL9432-130-19
		13	21	R	SOL9431-130-21
E 90-140 HP	3	14 1/2	15	R	SOL9531-145-15
		14 1/2	15	L	SOL9532-145-15
		14 1/4	17	R	SOL9531-143-17
		14 1/4	17	L	SOL9532-143-17
		14	19	R	SOL9531-140-19
		14	19	L	SOL9532-140-19
		14	21	R	SOL9531-140-21
		14	21	L	SOL9532-140-21
		14	23	R	SOL9531-140-23
		14	23	L	SOL9532-140-23
E 135-350 HP	3	15 3/4	15	R	SOL9571-158-15
		15 3/4	15	L	SOL9572-158-15
		15 1/2	17	R	SOL9571-155-17
		15 1/2	17	L	SOL9572-155-17
		15 1/4	19	R	SOL9571-153-19
		15 1/4	19	L	SOL9572-153-19
		15	21	R	SOL9571-150-21
		15	21	L	SOL9572-150-21
		14 3/4	23	R	SOL9571-148-23
		14 3/4	23	L	SOL9572-148-23
		14 1/2	25	R	SOL9571-145-25
		14 1/2	25	L	SOL9572-145-25



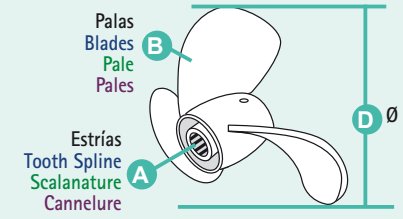

P Paso
Pitch
Passo
Pas

R Rotación L (izquierda) R (derecha)
Rotation L (left) R (Right)
Rotazione L (SX) R (DX)
Rotation L (gauche) R (droit)

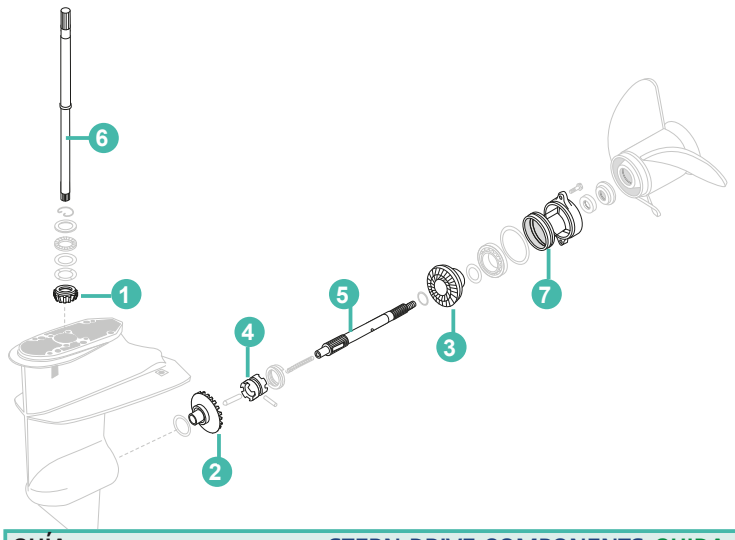

GUÍA PIEZAS DE COLA — STERN DRIVE COMPONENTS APPLICATIONS — GUIDA RICAMBI PIEDE — GUIDE DES PIECES D'EMBASE

		1	2	3	4	5	6 L	6 S	7
DT2	1986-00	REC57311-98400							
DT2.2 K1-K5	2001-05	REC57311-98400							
DT9.9K DT15K-G-Y	1986-00	REC57311-93901	REC57510-93902	REC57521-93902		REC57610-93901	REC57100-93902	REC57110-93912	REC56120-93900
DT9.9 DT15K1-K4	2001-04	REC57311-93910	REC57510-93910	REC57521-93910		REC57610-93901	REC57100-93902	REC57110-93912	REC56120-93900
DF9.9 DF15T-K3	1996-03	REC57311-93910	REC57510-93910	REC57521-93910		REC57610-93901	REC57100-93902	REC57110-93912	REC56120-93900
DF9.9 DF15R	2004-11	REC57311-93910	REC57510-93910	REC57521-93910		REC57610-93901	REC57100-93902	REC57110-93912	REC56120-93900
DT15C	1989-97	REC57311-93901	REC57510-93902	REC57521-93902		REC57610-93901			REC56120-93900
DF15	2012					REC57610-93901	REC57100-93902	REC57110-93912	
DT20 DT25 DT30G-Y	1986-00	REC57311-96311	REC57510-89J00	REC57521-96312					
DT25C DT30C-K-Y	1989-00	REC57311-96311	REC57510-89J00	REC57521-96312					
DT25 DT30K1-K2	2001-02	REC57311-96320	REC57510-89J00	REC57521-89J00					
DF25 DF30Y-K6	2000-06	REC57311-96320	REC57510-89J00	REC57521-89J00					
DT40C-W G-X	1986-99	REC57311-94402	REC57510-94402	REC57521-94400			REC57110-94441	REC57110-94411	
DT40W K1-K4	2001-04	REC57311-94402	REC57510-94402	REC57521-94400			REC57110-94441	REC57110-94411	
DF40 DF50X-K10	1999-10				REC57621-94403				

KIT CIERRE DE HÉLICE — PROPELLER NUT KIT — KIT CHIUSURA ELICA — KIT ECROU D'HELICE

REF	OEM
REC57630-96300	57630-96300

DF20R, DF25, DF25R V2 (2006-11)
DF25, DF30Y-K6 (2000-06)
DT20, DT25, DT30G-Y (1986-00)
DT25, DT30K1-K2 (2001-02)
DT25C, DT30C-K-Y (1989-00)



REF	OEM
REC57630-94300	57630-94300 57630-94301

DF40, DF50X-K10 (1999-10)
DF40A, DF50A, DF60A (2010+)
DT40C-W G-X (1986-99)
DT40W K1-K4 (2001-04)
DT55, DT65J-X (1988-99)



REF	OEM
REC57630-94500	57630-94550

DF40A, DF50A, DF60A (2014)
DF60, DF70W-K9 (1998-09)
DT75, DT85J-Y (1988-00)
DT90, DT100L-Y (1990-00)
DT115, DT140G-Y (1986-00)
DF60, DF70 V-STYLE



REF	OEM
REC57630-92E00	57630-92E00

DF150, DF175Z-T(G) (2006-14)
DF200, DF225, DF250 (2004+)
DF200A (20015+)
DF300A-T-Z (2007-12)
DF150, DT200 , DT225W-K3 (1998-03)
V6 H-Y (1987-00)



PASADOR DE HÉLICE | PROPELLER PIN | PIN ELICA | CLAVETTE D'HELICE

new

REF	OEM
REC09202-04002	09202-04002

DF2.5 (2006-13)
DF4, DF5, DF6 (2002-11)
DT2, DT2.2 G-Y (1986-00)
DT4/J4 (1988-00)
DT5Y (1988-02)



PASADOR DE LA TUERCA DE HÉLICE | COTTER PIN | COPPIGLIA | GOUPILLE D'ECROU D'HELICE

new

REF	OEM
REC91490-40030	09204-03003

2.5 --> 350 HP



new

REF	OEM
REC09204-02004	09204-02004

8 --> 20HP



new

REF	OEM
PAGB/T91-1.6X12	09204-02001

DF2.5
DT2, DT2.2HP

HÉLICE DE PLÁSTICO
PLASTIC PROPELLER
ELICA IN PLASTICA
HELICE DE PLASTIQUE



TUERCA DE HÉLICE | PROPELLER NUT | DADO DI ELICA | ÉCROU D'HÉLICE

new

REF	OEM
REC09141-12005	09141-12005

DF8A, DF9.9A (AR) (2010+)
DF9.9, DF15T-K3 (1996-03)
DF9.9, DF15(R) (2004-11)
DF9.9B, DF15A, DF20A (2013+)
DT15C (1989-97)
DT9.9, DT15K1-K4 (2001-04)
DT9.9K, DT15K G-Y (1986-00)



new

REF	OEM
REC90171-18M04	09141-18005

40 --> 300 HP
DT & DF

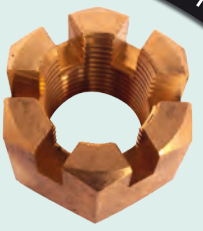

SEPARADOR DE HÉLICE | PROPELLER WASHER | DISTANZIALE ELICA | ENTRETOISE D'HELICE

new

REF	OEM
REC57632-94J00	57632-94J00

DF8A, DF9.9A (AR) (2010+)
DF9.9, DF15(R) (2004-11)
DF9.9B, DF15A, DF20A (2013+)

TRASERO | BACK | POSTERIORE | ARRIERE

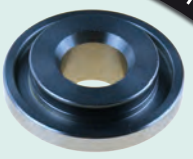

new

REF	OEM
REC57633-93901	57633-93901 57633-93900

DF8A, DF9.9A (AR) (2010+)
DF9.9, DF15(R) (2004-11)
DF9.9B, DF15A, DF20A (2013+)

DELANTERO | FRONT | ANTERIORE | AVANT



REF --> RO / OEM

REF	R.O. / OEM	
C		
CEF500312	17461-95201	469
CEF500319	17461-92D02	469
CEF500329	17461-93901	469
CEF500329	17461-93902	469
CEF500329	17461-93903	469-470
CEF500336	17461-98501	469
CEF500336	17461-98502	469
CEF500336	17461-98503	469-470
CEF500360	17461-95300	469
CEF500360	17461-95301	469
CEF500360	17461-95302	469
CEF500360	17461-95501	469
CEF500361	17461-94700	469
CEF500361	17461-94701	469
CEF500361	17461-95200	469
CEF500362G	17451-96301	469
CEF500362G	17461-96301	469
CEF500362G	17461-96310	469
CEF500362G	17461-96312	470
CEF500365	17461-87E10	470
CEF500365	17461-87E11	470
CEF500365	17461-87E12	469-470
CEF500367	17461-90J00	469
CEF500367	17461-90J01	469-470
CEF500367	17461-94510	469
CEF500393	17461-93J00	470
CEF500398	17461-93001	469
CEF500398	17461-93002	469
CEF500398	17461-93003	469
CEF500398	17461-93004	469
CEF500399	17461-96400	469
CM11130-94600	11130-94600	477-479
CM11130-94600A	11130-94600	477
CM41811-98500	41811-98500	476-501
CM5033167	41810-98500	439
CM55125-87D00	55125-87801	477
CM55125-87D00	55320-93900	477
CM55125-87D00A	55125-87801	477
CM55125-87D00A	55320-93900	477
CM55125-94400	55125-94400	511
CM55125-94502	55125-94502	477
CM55125-95301A	55125-95301	477
CM55125-95500	55125-87E01	477
CM55125-95500	55125-95500	509
CM55125-95500A	55125-87E01	477
CM55125-96310	55125-96310	477-505-507
CM55125-96310A	55125-96310	477
CM55300-95500	55300-95500	476-499-501-507-509-511
CM55300-95500A	55300-95500	476
CM55320-95310	55320-95310	476
CM55320-95310	55320-95311	517
CM55320-95310A	55320-95310	476
CM55320-98400	55320-98400	476
CM55320-98400A	55320-98400	476
CM55320-98600	55320-98600	477
CM55320-98600A	55320-98600	477
CM55321-87J00	55321-87J00	476-497-501-511
CM55321-87J00	55321-87J01	476-479-499-503
CM55321-87J00A	55321-87J00	476
CM55321-87J00A	55321-87J01	476
CM55321-87J00A	55321-87J01	439-440-441
CM55321-90J01	55321-90J01	477-512-515-516
CM55321-90J01A	55321-90J01	477
CM55321-93900	55320-93900	477
CM55321-93900	55321-93900	501
CM55321-93900A	55320-93900	477
CM55321-94900	55320-94900	476
CM55321-94900A	55320-94900	476
CM55321-94900A	55320-94900	441
CMSZ4050KITA		477
CMSZ90140KITA		477
CHAL90C		456
CHAQL78C		456
CHAQL82C		456
CHAQL82YC		456
CHAQL86C		456
CHAQL87YC		456
CHARA8HC		456
CHARC9YC		456
CHARN9YC		456
G		
GS11290		461
GS11291		461
GS11292		461
GS11294		461
GS30435		447
GS31001		447
GS31002		447
GS31035	65750-98505	444
GS31036	65750-98505	444
GS31037	65740-99100	444
GS31038	65720-94411	444
GS31039	65720-94403	444
GS31064		444
GS31065		447
GS31066		447
GS31067		447
GS31068		443
GS31069		443

REF	R.O. / OEM	
GS31070	65740-95D00	444
GS31071	65750-95500	444
GS31072	65750-95500	444
GS31089	65750-89J11	444
GS31090	65770-95504	442
GS31092		444
GS31095	65770-93J12	442
GS31096		442
GS31097		442
GS31099		442
GS31155		447
GS31156		447
GS31157		447
GS31166		447
GS31183		442
GS31187		442
GS31189		442
GS35031		442
GS35032		442
L		
LENS3213		445
LENS3227	99105-20005	446
N		
NGKB6HS		456
NGKB6HS-10		456
NGKB7HS		456
NGKB7HS-10		456
NGKB8HS		456
NGKB8HS-10		456
NGKBKR6E	09482-00427	439-440-441-455
NGKBP5HS		456
NGKBP6HS		456
NGKBPR5HS		456
NGKBPR6ES	09482-00299	439-440-455
NGKBPR6HS		456
NGKBPR7HS-10		456
NGKBR4HS		456
NGKBR5HS		456
NGKBR6HS		456
NGKBR6HS-10		456
NGKBR7HS		456
NGKBR7HS-10		456
NGKBR8HCS-10		456
NGKBR8HIX		456
NGKBR8HS		456
NGKBR8HS-10	94702-00271	456
NGKCPR6EA-9	09482-00L04	439-440-455
NGKCR6E	09482-00528	439-455
NGKCR6HSA	09482-00406	439-455
NGKDCPR6E	09482-00446	440-455
NGKLKR6E	09482-00649	455
P		
PAF15-07080000	15410-94400	447
PAF15-13010010W	67256-95600	466
PAF25-00000014	09202-08006	515-516-517-518
PAF25-07000007W	67275-95600	466
PAF4-04000030		443
PAF4-04090000	15100-91J00	450
PAF4-04090000	15100-91J01	450
PAF4-04090000	15100-91J02	450
PAF4-05000010		443
PAF40-0701000EI		446
PAF8-00000003	29116-93J10	513
PAGB/T5283-M6X25	09116-06229	497
PAGB/T5783-M6X12	09100-06130	515-516
PAGB/T5783-M6X14	09103-06281	476-477-478-479-497
PAGB/T5783-M6X16	09116-06225	497-512
PAGB/T5783-M8X16	09117-08037	507
PAGB/T5783-M8X16	09117-08109	509-511
PAGB/T5783-M8X25	09117-08057	515
PAGB/T5783-M8X30	09116-08151	499-503
PAGB/T5783-M8X30	09117-08047	501-509
PAGB/T5783-M8X55	09116-08117	501
PAGB/T5787-1986	09116-08156	497
PAGB/T5787-M6X20	09116-06106	507
PAGB/T5787-M6X20	09116-06227	499-503
PAGB/T5787-M6X20	29116-93J00	501
PAGB/T5787-M6X30	09116-08122	505
PAGB/T6170-M6	29141-93J00	497-499-501-505-509-511
PAGB/T6184-2000	09141-06020	507
PAGB/T6184-2000	29141-93J00	503
PAGB/T8.8-2000	09125-05046	515-516
PAGB/T818-M4X30	09125-04023	512
PAGB/T818-M6X10	09125-06063	501-516
PAGB/T818-M6X14	09128-06221	479
PAGB/T820-M6X20	09126-06006	499-501
PAGB/T848-6	09160-06082	497-503-505
PAGB/T848-6	09162-06006	507
PAGB/T879.1-2.5X14	09202-02006	439
PAGB/T889.1-M4	09140-04007	512
PAGB/T896-6	57292-94300	466
PAGB/T91-1.6X12	09204-02001	439-532
PAGB/T93-6	29162-93J00	499-501-509-511
PAGB/T97.1-8		507
PAJASOF404-19-033	09280-33005	439
PH130-0006	31100-89J00	457
PH130-0006	31100-94400	457

REF	R.O. / OEM	
PH130-0006	31100-944002	457
PH130-0006	31100-94401	457
PH130-0006	31100-95D00	457
PH130-0006	31100-96310	457
PH130-0006	31100-96311	457
PH130-0007	31100-95240	457
PH130-0007	31100-95242	457
PH130-0007	31100-95243	457
PH130-0052	31100-87000	457
PH130-0052	31100-87D00	457
PH130-0052	31100-87D10	457
PH130-0052	31100-92E00	457
PH130-0053	31100-94500	457
PH130-0053	31100-94510	457
PH130-0053	31100-94511	457
PH130-0053	31100-94512	457
PH130-0053	31100-94600	457
PH130-0053	31100-94601	457
PH130-0053	31100-94610	457
PH130-0060	31100-95310	457
PH130-0060	31100-95312	457
PH130-0060	31100-95313	457
PH130-0060	31100-95521	457
PH130-0060	31100-95600	457
PH130-0060	31100-95601	457
PH130-0071	31100-90J00	457
PH130-0071	31100-90J01	457
PH130-0075	31100-94702	457
PH130-0077	31100-94J10	457
PH130-0077	31100-94J20	457
PH130-0077	31100-94J21	457
PH130-0077	31100-94J22	457
PH130-0077	31100-95J00	457
PH130-0077	31100-95J01	457
PH130-0078	31100-93J00	458
PH130-0078	31100-96J00	458
PH130-0078	31100-96J01	458
PH130-0078	31100-98L00	458
PH130-0078	31100-98L10	458
PH130-0079	31100-87500	458
PH130-0079	31100-87J00	458
PH130-0079	31100-87J10	458
PH130-0079	31100-87J11	458
PH200-T024	38100-87D10-0ED	462
PH200-T024	38100-87D10-0IT	462
PH200-T024	38100-87D10-35J	462
PH200-T024	38100-87E20-0ED	462
PH200-T024	38100-92E00-0ED	462
PH200-T027	48500-95550-0ED	461
PH200-T027	48500-95680-0ED	461
PH200-T046	38100-87J11	462
PH200-T046	38100-87J20	462
PH200-WH01		461
PRE3300C08	99105-11002-008	467
PRE3300C09	99105-11002-009	467
PRE3300C10	99105-11002-010	467
PRE3300C11	99105-11002-011	467
PRE3300C12	99105-11002-012	467
PRE3300C13	99105-11002-013	467
PRE3300C14	99105-11002-014	467
PRE3300C15	99105-11002-015	467
PRE3300C16	99105-11002-016	467
PRE3300C17	99105-11002-017	467
PRE3300C18	99105-11002-018	467
PRE3300C19	99105-11002-019	467
PRE3300C20	99105-11002-020	467
PRE3300C21	99105-11002-021	467
PRE3300C22	99105-11002-022	467
PRE3300C23	99105-11002-023	467
PRE3300C24	99105-11002-024	467
PRE3300C25	99105-11002-025	467
PRE3300C26	99105-11002-026	467
PRE3300C27	99105-11002-027	467
PRE3300C28	99105-11002-028	467
PRE3300C29	99105-11002-029	467
PRE3300C30	99105-11002-030	467
R		
RAC23289-10		446
RAC23299-10		446
RAC320R-RAC-01		445
RAC320R-RAC-03		445
RAC490R-RAC-01	99105-20005-ASY	446
RACPFF5510		445
RACRK22628	99105-20003	447
RACS3213		445
RACS3227	99105-20005	446
REC08110-60020	08110-60020	499-501-503-523-524
REC08110-60050	08110-60050	499-501-503-524
REC08113-60060	08113-60060	505-507-524
REC09116-06094	09116-06094	479-501-505-509-517
REC09116-06094	55321-93J00	479
REC09116-06121	09116-06121	479-505-507
REC09116-06121	09116-06229	499
REC09116-06121	55321-94900	479
REC09141-12005	09141-12005	503-532
REC09160-12066	09160-12066	503
REC09160-20027	09160-20027	499-503-526
REC09160-20041	09160-20041	501-503-526
REC09160-20042	09160-20042	499-501-503-526

REF	R.O. / OEM	
REC09160-20043	09160-20043	499-501-503-526
REC09160-20044	09160-20044	499-501-503-526
REC09160-20052	09160-20052	491
REC09160-21009	09160-21009	499-501-503-526
REC09160-26015	09160-26015	509-526
REC09160-27008	09160-27008	480-491
REC09168-10022	09168-10022	490-497-501-505-507-509-511-512-515-516-439-440-441
REC09168-10034	09168-10034	513-517-518-521-440-441
REC09168-12012	09168-12012	439-440-441-449
REC09168-12017	09168-12017	439-440-449
REC09181-24001	09181-24001	491
REC09202-04002	09202-04002	509-532
REC09202-05022	09202-05022	511-522
REC09204-02004	09204-02004	439-499-503-532
REC09209-08016	09209-08016	505-507-522
REC09248-10008	09248-10008	497-501-505-507-509-511-512-513-515-516-521
REC09262-25078	09262-25003	503
REC09262-25078	09262-25078	490
REC09262-30055	09262-30055	490
REC09262-35052	09262-35052	480
REC09263-14022	09263-14014	492
REC09263-14022	09263-14022	491
REC09263-15019	09263-15019	501-524
REC09263-18016	09263-14022	491
REC09263-20046	09263-20046	505-507-524
REC09263-20047	09263-20047	505-507-524
REC09263-20051	09263-20051	491
REC09263-20072	09263-20072	480-491-492
REC09263-20L04	09263-20024	525
REC09263-20L04	09263-20L04	499-501-503-525
REC09263-22020	09263-22020	509-511-524
REC09263-22L03	09263-22039	509-511-524
REC09263-22L03	09263-22L03	524
REC09263-24018	09263-24018	491
REC09263-25025	09263-25025	509-523
REC09263-25025	09263-25048	523
REC09263-25025	09263-25L02	523
REC09263-25062	09263-25062	509-523
REC09263-27005	09263-27005	480-491
REC09265-17002	09265-17002	505-507-524
REC09269-30012	09269-30012	480-490
REC09280-08005	09280-08005	520
REC09280-11005	09280-11001	520
REC09280-11005	09280-11005	520
REC09280-22019	09280-22019	439-440-441-476-478-479
REC09280-54001	09280-54001	449
REC09280-54001	09280-56001	449
REC09280-54001	09280-54001	439
REC09280-57002	09280-57002	499-501-503-521
REC09280-75001	09280-75001	505-509-511-521
REC09282-10008	09282-10008	488-497
REC09282-12008	09282-12008	488
REC09282-12010	09282-12010	489
REC09282-15008	09282-15008	489
REC09282-17005	09282-17005	489-509-511
REC09282-17009	09282-17009	489
REC09283-10003	09283-10003	489
REC09283-10009	09283-10009	489
REC09283-17002	09283-17002	488
REC09283-20018	09283-20018	488
REC09283-20045	09283-20045	489
REC09283-25035	09283-25035	489
REC09283-25075	09283-25075	489
REC09283-25076	09283-25075	489
REC09283-30062	09283-30062	480-489
REC09283-30064	09283-30064	489
REC09283-35043	09283-35043	480-489
REC09289-10005	09289-10005	489
REC09289-12002	09289-12002	489
REC09289-12003	09289-12003	490-501
REC09289-17004	09289-17004	489
REC09289-17006	09289-17006	489-501
REC09289-17006	09289-17L02	499-503
REC09289-20009	09289-20009	489-505-507
REC09289-22007	09289-22007	490-509-511
REC09289-30008	09289-30008	490
REC09380-15001	09380-15001	499-501-503-524
REC09381-20003	09381-20003	480
REC09401-11425	09401-11425	443
REC09401-11425	17822-90J00	443
REC09401-11425BULK	09401-11425	443
REC09401-11425BULK	17822-90J00	443
REC09420-03002	09420-03002	470-497
REC09420-03005	09420-03005	470-503
REC09420-03005	09420-03009	470-499

REF	R.O. / OEM	
REC09420-04006	09420-04006	470-505-507-509-511
REC09420-05009	09420-05006	470
REC09420-05009	09420-05009	470-515-516-517-518-440-441
REC09440-05027	09440-05027	501-522
REC09440-08043	09440-08043	511-522
REC09440-32008	09440-32008	501-522
REC09440-40002	09440-40002	509-511-522
REC10W30U3		450
REC10W30U6		450
REC10W40U3	990C0-01E30-GLN	450
REC10W40U3	990C0-10W40-1GL	450
REC10W40U3	990C0-10W40-GAL	450
REC10W40U3	990C0-10W40-GLN	450
REC10W40U6	990C0-01E30-GLN	450
REC10W40U6	990C0-10W40-1GL	450
REC10W40U6	990C0-10W40-GAL	450
REC10W40U6	990C0-10W40-GLN	450
REC11141-87D90	11141-87D61	487
REC11141-87D90	11141-87D90	487
REC11141-87D92	11141-87D32	487
REC11141-87E90	11141-87D90	487
REC11141-87E90	11141-87E20	487
REC11141-87J02	11141-87J00	483-484
REC11141-87J02	11141-87J01	483-484
REC11141-87J02	11141-87J02	481-483-484
REC11141-87L00	11141-87L00	482-483-484
REC11141-90J01	11141-90J00	483
REC11141-90J01	11141-90J01	484
REC11141-91JL0	11141-91J01	483-484
REC11141-91JL0	11141-91J02	483-484
REC11141-91JL0	11141-91JL0	483-484
REC11141-92J01	11141-92J00	483-484
REC11141-93960	11141-93950	487
REC11141-93E20	11141-93E20	483-484
REC11141-93J10	11141-93J03	483-484
REC11141-94450	11141-94440	487
REC11141-94450	11141-94450	487
REC11141-94506	11141-94506	487
REC11141-94506	11141-94620	487
REC11141-94720	11141-94701	487
REC11141-94720	11141-94720	487
REC11141-95505	11141-95505	487
REC11141-95505	11141-95621	487
REC11141-95D40	11141-95D40	487
REC11141-95J00	11141-95J00	483-484
REC11141-96303	11141-96344	487
REC11141-96344	11141-96343	487
REC11141-96344	11141-96344	487
REC11141-97J02	11141-97J01	483
REC11141-97J02	11141-97JL0	483-484
REC11141-98130	11141-98130	487
REC11141-98401	11141-98401	487
REC11141-98401	11141-98411	487
REC11141-98J10	11141-98J01	483-484
REC11141-98J10	11142-98J00	484
REC11142-93J10	11142-93J03	483-484
REC11142-98J10	11142-98J00	483
REC11162-94410	11162-94410	488
REC11189-87J00	11189-87J00	481-486
REC11189-87L00	11189-87L00	482-486
REC11265-87E10	11265-87E00	479
REC11265-87E10	11265-87E00-H17	479
REC11265-87E10	11265-87E10	481
REC11400-87804	11400-87800	484
REC11400-87804	11400-87801	484
REC11400-87804	11400-87802	484
REC11400-87804	11400-87803	484
REC11400-87804	11400-87804	481-484
REC11410-87851	11410-87850	484
REC11410-87851	11410-87851	482-484
REC11413-87J00	11413-87J00	481-486
REC11433-87J00	11433-87J00	481-486
REC11433-93912	11433-93901	488
REC11433-94412	11433-94401	488
REC11433-96330	11433-96302	488
REC11434-94411	11434-94411	495
REC11489-87J00	11489-87J00	481-493
REC11489-87L00	11489-87L00	482-493
REC11489-90J00	11489-90J00	493
REC11489-93E11	11489-93E10	493
REC11489-93J00	11489-93J00	493
REC11542-87L00	11542-87L00	482-493
REC11552-87L00	11552-87L00	485
REC12110-93130K	12110-93130	492
REC12110-94350K	12110-94350	492
REC12110-94400K	12110-94400K	480-492
REC12140-93121	12140-93121	492
REC12140-94400	12140-94400	480-492
REC12151-94400	12151-94400	480
REC12161-93902	12161-93902	491
REC12161-94400	12161-94400	480-491
REC12161-96300	12161-96300	491
REC12211-94410	12211-94410	480
REC12221-94412	12221-94412	480-490
REC12231-94413	12231-94413	480-490
REC12232-94412	12232-94412	480-490
REC12240-94432	12240-94432	480-490
REC12710-97J00	12710-97J00	483
REC12761-72F00	12761-72F00	492
REC12761-93EL0	12761-93EL0	492
REC12761-99J00	12761-99J00	492

REF	R.O. / OEM	
REC12778-93J00	12778-93J00	485
REC13119-93J00	13119-93J00	494
REC13122-95J00	13122-95J00	494
REC13147-98J00	13147-98J00	493
REC13200-91D21	13200-91D20	453
REC13200-91D21	13200-91D21	453
REC13200-91J70	13200-91J70	453
REC13250-95D01	13250-95D01	453
REC13421-87J00	13421-87J00	481-485
REC13421-98J00	13421-98J00	485
REC13650-52G00	13650-52G00	454
REC13650-56B00	13650-56B00	454
REC13910-87D00	13910-87D00	453
REC13910-89J01	13910-89J01	453
REC13910-94400	13910-94400	453
REC13910-94701	13910-94701	453
REC14141-93952-0EP	14141-93952-0EP	495
REC14151-87L00	11151-87L00	482
REC14151-87L00	14151-87L00	494
REC14151-93912	14151-93901	495
REC14151-93J00	14151-93J00	494
REC14151-94411	14151-94412	495
REC14151-96311	14151-96310	495
REC14152-93J00	14152-93J00	494
REC14212-91L00	14212-91L00	495
REC14212-91L00	14212-96310	495
REC14212-93J00	14212-93J00	494
REC14212-94413	14212-94412	495
REC15170-91J00	15170-91J00	451
REC15170-93911	15170-93920	451
REC15170-94320	15170-94320	451
REC15170-94J00	15170-94J00	451
REC15170-98110	15170-98110	451
REC15170-99E00	15170-99E00	451
REC15200-82J20	15200-92J00/02	451
REC15200-96J00	15200-96J00	450
REC15410-87J00	15410-87J10	448
REC15410-87J10	15410-87J10	440-447
REC15410-87J30	15410-87J30	439-440-441-447
REC15410-87L00	15410-87L00	439-440-447
REC15410-88L00	15410-88L00	440-448
REC15410-93J00	15410-93J00	448
REC15410-96J00	15410-96J00	441-447
REC15410-98500	15410-98500	439-448
REC15412-92J00	15412-92J00	441-448
REC15412-93J10	15412-93J10	441-448
REC15440-87L10	15440-87L10	448
REC15440-90J00	15440-90J00	448
REC15440-93J00	15440-93J00	448
REC15440-96J00	15440-96J00	448
REC15440-96J01	15440-96J01	448
REC15440-99E01	15440-99E00	449
REC15440-99E01	15440-99E01	449
REC15626-90J00	15626-90J00	451
REC15626-99E00	15626-99E00	451
REC15626-99E00	15643-99E00	451
REC15710-65D00	15710-65D00	451
REC15710-66D00	15710-66D00	452
REC15710-82K50	15710-82K50	453
REC15710-82M00	15710-82M00	452
REC15710-85K00	15710-85K00	452
REC15710-87J00	15710-87J00	452
REC15710-87L00	15710-87L00	452
REC15710-89L00	15710-50M00	451
REC15710-89L00	15710-89L00	452
REC15710-93J00	15710-93J00	453
REC15710-96J00	15710-96J00	453
REC15710-99E00	15710-99E00	452
REC16433-93J00	16433-93J00	485
REC16510-05240	16510-05240	449
REC16510-05240	16510-45H10	449
REC16510-05240	16510-05240	439-449
REC16510-82703	16510-81420	449
REC16510-82703	16510-82703	449
REC16510-82703	16510-92J00	449
REC16510-82703	16510-92J00	449
REC16510-87J00	16510-87J00	449
REC16510-87J00	16510-87JL0	449
REC16510-87J00	16510-87J00	439-440-449
REC16510-90J00	16510-61A01	449
REC16510-90J00	16510-61A20-MHL	449
REC16510-90J00	16510-61A21-MHL	449
REC16510-90J00	16510-61A30	449
REC16510-90J00	16510-61A31	449
REC16510-90J00	16510-90J00	449
REC16510-90J00	16510-90J00	440-441-449
REC16510-93J00	16510-96J00	449
REC16510-93J00	16510-96J10	449
REC16510-93J00	16510-96J10	449
REC16510-96J00	16510-96J00	449
REC16510-96J00	16510-96J10	449
REC16510-96J00	16510-96J10	441
REC16539-87L00	16539-87L00	482-485
REC16910-GB2-005	15410-94350	448
REC17400-87810	17400-87811	440
REC17400-87820	17400-87820	440
REC17400-87D11	17400-87D00	474
REC17400-87D11	17400-87D10	474
REC17400-87D11	17400-87D11	474
REC17400-87D11	17400-87D11	476

REF	R.O. / OEM	
REC17400-87E04	17400-87E03	440-474-476-512
REC17400-87L01	17400-87L00	475
REC17400-87L01	17400-87L01	475-513
REC17400-87L01	17400-87L01	440-476
REC17400-88810	17400-88810	440
REC17400-88L00	17400-88L00	440-475-476-511
REC17400-89810	17400-89810	439
REC17400-89820	17400-89820	440
REC17400-90J20	17400-90J11	475
REC17400-90J20	17400-90J20	476-515
REC17400-91830	17400-91830	439
REC17400-91860	17400-91860	439
REC17400-92821	17400-92821	441
REC17400-92840	17400-92840	440
REC17400-92850	17400-92850	441
REC17400-92D01	17400-92D01	474
REC17400-92D01	17400-92D11	474
REC17400-92D01	17400-92D01	476
REC17400-92J00	17400-92J200	475-476
REC17400-92J21	17400-92J21	440-441-475-476-515-516
REC17400-93851	17400-93851	441
REC17400-93912	17400-93911	475
REC17400-93912	17400-93912	475
REC17400-93951	17400-93950	474-501
REC17400-93951	17400-93951	476-501
REC17400-93J01	17400-93J00	474
REC17400-93J01	17400-93J01	474
REC17400-93J01	17400-93J02	474
REC17400-93J01	17400-93J03	474
REC17400-93J01	17400-93J01	441-476
REC17400-94611	17400-94611	475-476
REC17400-94701	17400-94700	474
REC17400-94701	17400-94701	474
REC17400-94701	17400-94701	476
REC17400-94810	17400-94810	439
REC17400-94821	17400-94821	440
REC17400-94J00	17400-94J200	439-476
REC17400-94L00	17400-94L00	440-475-476
REC17400-95351	17400-95350	474
REC17400-95351	17400-95351	474
REC17400-95351	17400-95550	474
REC17400-95351	17400-95351	476
REC17400-95870	17400-95870	439
REC17400-95J02	17400-95J01	476
REC17400-95J02	17400-95J02	439-476-505
REC17400-96403	17400-96350	474
REC17400-96403	17400-96351	474
REC17400-96403	17400-96352	474-507
REC17400-96403	17400-96353	509
REC17400-96403	17400-96403	440-474-476-509
REC17400-96821	17400-96821	441
REC17400-96J02		441
REC17400-96J03	17400-96J00	475
REC17400-96J03	17400-96J01	475
REC17400-96J03	17400-96J02	475
REC17400-96J03	17400-96J03	441-475-476-517
REC17400-97810	17400-97810	439
REC17400-97820	17400-97821	439
REC17400-98551	17400-98551	474-476
REC17400-98652	17400-98652	474
REC17400-98652	17400-98661	474
REC17400-98652	17400-98652	476
REC17400-98661	17400-98661	474-497
REC17400-98661	17400-986L0	474
REC17400-98661	17400-986L1	474
REC17400-98661	17400-98661	439-476
REC17400-98861	17400-98861	441
REC17400-98J01	17400-98J00	474
REC17400-98J01	17400-98J01	474-518
REC17400-98J01	17400-98J02	441-474-476
REC17400-99840	17400-99840	439
REC17400-99870	17400-99870	440
REC17400-99J01	17400-99J00	475
REC17400-99J01	17400-99J01	439-475-476-499-503
REC17411-93901	17410-93910	471
REC17411-93901	17411-93901	471-501
REC17411-94421	17410-94431	471
REC17411-94421	17411-94421	471-507-509
REC17413-92J01	17413-92J00	473
REC17413-92J01	17413-92J01	473-515-516
REC17413-95J00	17413-95J00	439-473-505-511
REC17413-96J01	17413-96J00	473
REC17413-96J01	17413-96J01	441-473-517
REC17413-99E11	17413-99E10	512-513
REC17413-99E11	17413-99E11	473
REC17416-92J00	17416-92J00	515
REC17416-92J10	17416-92J10	472-515-516
REC17416-93J00	17416-93J00	472-518
REC17416-95J00	17416-95J00	472-505-511
REC17416-96J00	17416-96J00	472-517
REC17416-99E10	17416-99E10	472-513
REC17417-92J00	17417-92J00	472-515
REC17431-92L20	17431-92L20	521
REC17431-92L20	17431-94440	521
REC17431-92L20	17431-94441	521
REC17450-93921	17450-93440	471
REC17450-93921	17450-93920	471

REF	R.O. / OEM	
REC17450-93921	17450-93921	471-501
REC17450-93921	17450-93930	471
REC17452-93910	17452-93910	473-501
REC17453-93901	17453-93900	501-521
REC17453-93901	17453-93901	521
REC17461-87E12	17461-87E10	470
REC17461-87E12	17461-87E11	470
REC17461-87E12	17461-87E12	469-470-512-513
REC17461-90J01	17461-90J00	469
REC17461-90J01	17461-90J01	469-470-515-516-517
REC17461-90J01	17461-94510	469
REC17461-92D02	17461-92D02	469
REC17461-93004	17461-93001	469
REC17461-93004	17461-93002	469
REC17461-93004	17461-93003	469
REC17461-93004	17461-93004	469
REC17461-93903	17461-93901	469
REC17461-93903	17461-93902	469
REC17461-93903	17461-93903	469-470-501-503
REC17461-93903	17461-939M0	499
REC17461-93903	17461-93903	470
REC17461-93J00	17461-93J00	470-518
REC17461-94700	17461-94700	469
REC17461-94700	17461-94701	469
REC17461-94700	17461-95200	469
REC17461-94700	17461-95201	469
REC17461-95300	17461-95300	469
REC17461-95300	17461-95301	469
REC17461-95300	17461-95303	469
REC17461-95300	17461-95501	469
REC17461-96312	17451-96301	469
REC17461-96312	17461-94L00	470
REC17461-96312	17461-96301	469
REC17461-96312	17461-96310	469
REC17461-96312	17461-96312	470-505-507-509-511
REC17461-97JM0	17461-97110	439-470
REC17461-98503	17461-98501	469
REC17461-98503	17461-98502	469
REC17461-98503	17461-98503	469-470
REC17461-98503	17461-985M0	470-497
REC17462-93990	17462-93990	470-501
REC17471-92J00	17471-87E00	471
REC17471-92J00	17471-87E01	471-512
REC17471-92J00	17471-92J00	471-515-516
REC17471-92J02	17471-93J00	471
REC17471-92J02	17471-93J01	471
REC17471-92J02	17471-93J02	471-517
REC17471-93902	17471-93902	471-501
REC17471-94401	17471-94401	471-507-509
REC17471-95J01	17471-95J00	471
REC17471-95J01	17471-95J01	471-505-511
REC17471-97J00	17471-97J00-00	439-471
REC17471-97JL0	17471-97JL0	439-471
REC17471-98601	17471-98600	471
REC17471-98601	17471-98601	471
REC17472-87E10	17472-87E00	472
REC17472-87E10	17472-87E10	472-512-515-516
REC17472-87L00	17472-87L00	472-482-513
REC17472-91J00	17472-91J00	473-497
REC17472-92D10	17472-92D10	473
REC17472-93911	17472-93911	473-501
REC17472-93J00	17472-93J00	473-517
REC17472-95310	17472-95310	473
REC17472-96303	17472-96301	472
REC17472-96303	17472-96302	472
REC17472-96303	17472-96303	472-481-505-507-509-511
REC17472-97J00	17472-97J00	439-472
REC17472-97JL0	17472-97JL0	439-472
REC17472-98503	17472-98503	473
REC17472-98611	17472-98611	473
REC17472-98J00	17472-98J00	472-518
REC17560-91L00	17560-91L00	521
REC17560-91L00	17560-96300	521
REC17560-91L00	17560-96301	521
REC17560-91L00	17560-96304	521
REC17616-87J00	17616-87J00	468-481-486
REC17670-90J10	1770-90J10	468
REC17670-90J20	17670-90J20	468
REC17670-91J01	17670-91J00	468
REC17670-91J01	17670-91J01	468
REC17670-93962	17670-93962	468
REC17670-94402	17670-94402	468
REC17670-94J01	17670-94J00	468
REC17670-94J01	17670-94J01	468
REC17685-87D10	17685-87D00	486-488
REC17685-87D10	17685-87D10	481-486-488
REC17693-95J00	17693-95J00	485
REC17913-93J00	17913-93J00	469
REC17914-93J00	17914-93J00	469
REC17914-93J00	17914-93JL0	469
REC18-6865	48600-94511-0ED	462
REC18137-52D00	18137-52D00	452-454
REC18137-87L01	18137-87L01	452-454
REC18137-88L01	18137-88L01	452-454
REC18137-93J00	18137-93J00	452-454
REC18590-58M00	18590-58M00	452-454
REC18590-68H00	18590-68H00	452-454
REC18590-72F21	18590-72F21	452-454

REF	R.O. / OEM	
REC22-8M0001721		443
REC23211-94401	23211-94401	523
REC23311-95DL0	23311-95DL0	520
REC24942		445
REC24950		445
REC24952		445
REC25000		445
REC25010		445
REC25020		445
REC25030		445
REC25222-93901	25222-93901	520
REC25222-96300	25222-96300	520
REC25700-87D00	25700-87D00	519
REC25700-87D00	25700-87D00	520
REC25700-87E00	25700-87E00	519
REC25700-87E00	25700-87E00	520
REC25700-87L00	25700-87L00	513-519-520
REC25700-88L00	25700-88400	519
REC25700-88L00	25700-88L00	511
REC25700-88L00	25700-94400	519
REC25700-88L00	25700-88L00	509-520
REC25700-90J01	25700-90J01	515-520
REC25700-92J00	25700-92J00	515-516-519-520
REC25700-93J00	25700-93J00	517-519-520
REC25700-93L00	25700-93L00	518-519-520
REC25700-94500	25700-94500	520
REC25700-94700	25700-94700	519-520
REC25700-95501	25700-95500	519-520
REC25700-95D01	25700-95D00	519
REC25700-95D01	25700-95D01	507-519-520
REC25700-95J00	25700-95J00	505-519-520
REC25700-98J00	25700-98J00	519-520
REC25700-99E00	25700-99E00	512-519-520
REC25W40U3		450
REC2TU3		450
REC2TU6		450
REC31100-98L10	31100-98L10	458
REC32140-93900	32140-93900	455
REC32140-94400	32140-94400	455
REC32140-96310	32140-96310	455
REC32800-38F10	32800-38F10	459
REC32800-87J10	32800-87J10	459
REC32800-87L00	32800-87L00	459
REC32800-88L00	32800-88L00	459
REC32800-89J00	32800-89J00	459
REC32800-89J11	32800-89J10	459
REC32800-89J11	32800-89J11	459
REC32800-89J11	32800-89J11	459
REC32800-89L01	32800-89L00	459
REC32800-89L01	32800-89L01	459
REC32800-89L01	32800-89L01	459
REC32800-92E20	32800-92E20	459
REC32800-93J03	32800-93J01	459
REC32800-93J03	32800-93J02	459
REC32800-93J03	32800-93J03	459
REC32800-93J03	32800-93J03	459
REC32800-94620	32800-94620	458
REC32800-94620	92800-94610	458
REC32800-94620	32800-94620	459
REC32800-94J11	32800-94J10	459
REC32800-94J11	32800-94J11	459
REC32800-95D01	32800-95720	458
REC32800-95D01	32800-95D00	458
REC32800-95D01	32800-95D01	458
REC32800-95D01	32800-95D01	459
REC32800-98J01	32800-98J01	459
REC32800-99J00	32800-99J00	459
REC32900-93903	32900-93902	455
REC32900-93903	32900-93903	455
REC32900-93910	32900-93911	460
REC32900-94460	32900-94460	460
REC32900-94460	32900-94470	460
REC32900-94480	32900-94401	455
REC32900-94480	32900-94421	455
REC32900-94480	32900-94480	455
REC32900-96340	32900-96340	455
REC32900-96371	32900-96350	460
REC32900-96371	32900-96370	460
REC32900-96371	32900-96371	460
REC33220-58J20	33220-58J20	454
REC33220-76G02	33220-76G00	454
REC33220-76G02	33220-76G01	454
REC33220-76G02	33220-76G02	454
REC33410-93J00	33410-93J00	455
REC33410-94400-000	33410-93E10	455
REC33410-94400-000	33410-94400-000	455
REC33410-96L00	33410-93L00	455
REC34801-93J03	34801-93J00	463
REC34801-93J03	34801-93J01	463
REC34801-93J03	34801-93J02	463
REC34801-93J03	34801-93J03	463
REC34801-94710	34801-94700	463
REC34801-94710	34801-94710	463
REC34801-99E04	34801-99E01	463
REC34801-99E04	34801-99E02	463
REC34801-99E04	34801-99E03	463
REC34801-99E04	34801-99E04	463
REC35-802893Q		445
REC35-802893Q01		445
REC36120-ZW4-H12	38100-88L00	462
REC36120-ZW4-H12	38100-88L11	462
REC36120-ZW4-H12	38100-88L12	462
REC36120-ZY6-013	38100-90J30	462

REF	R.O. / OEM	
REC36120-ZY6-013	38100-90J40	462
REC36120-ZY6-013	38100-93J11	462
REC36120-ZY6-013	38100-93J13	462
REC36120-ZY9-003	38100-87L00	462
REC36120-ZY9-003	38100-87L01	462
REC36120-ZY9-003	38100-87L02	462
REC36120-ZY9-003	38100-87L03	462
REC36620-93J02	36620-93J02	466
REC36620-94J01	36620-94J01	466
REC37100-96J15	37100-96J14	465
REC37100-96J15	37100-96J15	465
REC37100-96J25	37100-96J20	465
REC37100-96J25	37100-96J21	465
REC37100-96J25	37100-96J22	465
REC37100-96J25	37100-96J23	465
REC37100-96J25	37100-96J24	465
REC37100-96J25	37100-96J25	465
REC37110-93J11	37110-93J10	458
REC37110-93J11	37110-93J11	458
REC37110-99E00	37110-99E00	458
REC37220-92E00	37220-92E00	465
REC37800-93954	37800-93953	460
REC37800-93954	37800-93954	460
REC37820-92E03	37820-92E00	460
REC37830-89E03	37830-89E02	460
REC37830-89E03	37830-95000	460
REC37830-95D04	37830-95D00	460
REC37830-95D04	37830-95D01	460
REC37830-95D04	37830-95D02	460
REC37830-95D04	37830-95D03	460
REC37830-95D04	37830-95D04	460
REC37850-90J06	37850-90J00	464
REC37850-90J06	37850-90J01	464
REC37850-90J06	37850-90J02	464
REC37850-90J06	37850-90J03	464
REC37850-90J06	37850-90J04	464
REC37850-90J06	37850-90J05	464
REC37850-90J06	37850-90J06	464
REC37850-93J10	37850-93J10	465
REC38100-87E10-OED	38100-87D00	461
REC38100-87E10-OED	38100-87D01-02M	461
REC38100-87E10-OED	38100-87D01-0ED	461
REC38100-87E10-OED	38100-87D02H	461
REC38100-87E10-OED	38100-87D0IT	461
REC38100-87E10-OED	38100-87E10-0ED	461
REC38100-87J00	37100-87J00-OEP	462
REC38100-87J00	38100-87J0EP	462
REC38100-96J00	38100-92J01	461
REC38100-96J00	38100-92J02	461
REC38100-96J00	38100-92J10	461
REC38100-96J00	38100-92J12	461
REC38100-96J00	38100-93J02	461
REC38100-96J00	38100-96J00	461
REC38100-96J00	38100-96J01	461
REC38100-97E00-0ED	38100-97E00-0ED	462
REC38100-99E01-0EP	38100-99E01-00	462
REC38100-99E01-0EP	38100-99E01-0ED	462
REC38100-99E01-0EP	38100-99E01-0EP	462
REC38410-93J12	38410-93J12	463
REC38410-93J12	38410-93J11	463
REC38410-93J12	38410-93J10	463
REC38410-93J12	38410-93J00	463
REC38860-76F01	38860-76F01	460
REC40135		447
REC40145		447
REC40155		447
REC40165		447
REC40970		461
REC40990		461
REC43211-87JL0	43211-87JL0	466
REC43211-87JL0	43211-94401	466
REC43211-94401	43211-94401	466
REC43711-97E11	43711-97E00	466
REC43711-97E11	43711-97E11	466
REC48503-93J12	48503-93J10	462
REC48503-93J12	48503-93J12	462
REC48503-93J12	48503-94900-0ED	462
REC48630-92J00	48630-92J00	463
REC48630-93J00	48630-93J00	463
REC48630-94900	48630-94900	463
REC48630-96J00	48630-96J00	463
REC48630-96J03	48630-96J01	463
REC48630-96J03	48630-96J02	463
REC48630-96J03	48630-96J03	463
REC48630-98L01	48630-98L00	463
REC48630-98L01	48630-98L01	463
REC51123-87L00	51123-87L00	482-486
REC51123-93J00	51123-93J00	485
REC51142-93J00	51142-93J00	485
REC51211-87J00	51211-87J00	481-484
REC51211-87L10	51211-87L00	482-484
REC51211-87L10	51211-87L10	482-484
REC51211-90J10	51211-90J00	484
REC51211-90J10	51211-90J01	484
REC51211-90J10	51211-90J02	484
REC51211-90J10	51211-90J10	484
REC51211-90J2	51211-90J21	484
REC51211-90J2	51211-90J22	484
REC51211-93J00	51211-93J00	484
REC52113-93910	52113-93901	495
REC52113-96330	52113-96304	495
REC52331-87L00	52331-87L00	482-494
REC55122-94400	55122-88L00	473-511

REF	R.O. / OEM	
REC55128-93J10	55128-93J00	521
REC55128-93J10	55128-93J10	517-521
REC55321-87J01AL		441
REC56120-93900	56120-90L00-0EP	521
REC56120-93900	56120-90L01-0EP	521
REC56120-93900	56120-90L02-0EP	521
REC56120-93900	56120-93900-002M	521
REC56120-93900	56120-93900-0EP	521
REC56120-93900	56120-93901-0ED	521
REC56120-93900	56120-93901-0EP	501
REC56120-93900	56120-93901-0EP	531
REC56120-94321-0EP	56120-94321-0EP	509-511-521
REC56120-96332-0EP	56120-96332-0EP	505-507-521
REC56130-94413-0EP	56130-94411-0EP	472
REC56130-94413-0EP	56130-94413-0EP	472
REC56130-96331-0EP	56130-96320-0EP	472
REC56130-96331-0EP	56130-96331-0EP	472
REC57100-93902	57100-93902	501
REC57100-93902	57100-93902	531
REC57110-93912	57110-93912	531
REC57110-94411	57110-92L10	531
REC57110-94441	57110-94441	531
REC57311-93901	57311-93901	525
REC57311-93901	57311-93901	531
REC57311-93910	57311-90L00	525
REC57311-93910	57311-93910	501-525
REC57311-93910	57311-93910	531
REC57311-94402	57311-94401	525
REC57311-94402	57311-94402	525
REC57311-94402	57311-94402	531
REC57311-96311	57311-91L00	525
REC57311-96311	57311-96310	525
REC57311-96311	57311-96311	525
REC57311-96311	57311-96320	525
REC57311-96311	57311-91L00	531
REC57311-96320	57311-96320	505-507-531
REC57311-98400	57311-98400	531
REC57311-98600	57311-91J00	497
REC57311-98600	57311-98600	525
REC57311-98600	57311-98601	525
REC57311-99J10	57311-97J10	503
REC57311-99J10	57311-99J10	499-525
REC57510-89J00	57510-89J00	505-507-525
REC57510-89J00	57510-91L00	525-531
REC57510-91J00	57510-91J00	497-525
REC57510-91J00	57510-98600	525
REC57510-91J00	57510-98610	525
REC57510-91J00	57510-98611	525
REC57510-93902	57510-93902	525
REC57510-93902	57510-93902	531
REC57510-93910	57510-90L00	525
REC57510-93910	57510-93910	501-525
REC57510-93910	57510-93910	531-532
REC57510-94402	57510-94400	525
REC57510-94402	57510-94401	525
REC57510-94402	57510-94402	525
REC57510-94402	57510-94402	531
REC57510-99J11	57510-99J10	503
REC57521-89J00	57521-89J00	505-507-526-531
REC57521-91J00	57521-91J00	497-526
REC57521-93902	57310-93850	526
REC57521-93902	57521-93902	526
REC57521-93902	57521-93902	531
REC57521-93910	57521-90L00	526
REC57521-93910	57521-93910	501-526-531
REC57521-94400	57310-94401	526
REC57521-94400	57521-94400	526
REC57521-94400	57521-94400	531
REC57521-96312	57521-96311	526
REC57521-96312	57521-96312	526
REC57521-96312	57521-96312	531
REC57521-99J10	57521-99J10	503
REC57610-93901	57610-93901	501-531
REC57610-94402	57610-94402	509-511
REC57610-96311	57610-96311	505-507
REC57621-91L10	57621-91L10	522
REC57621-91L10	57621-96300	522
REC57621-91L10	57621-96310	522
REC57621-94403	57621-87J00	522
REC57621-94403	57621-87J01	522
REC57621-94403	57621-87J02	522
REC57621-94403	57621-87J03	509-511-522
REC57621-94403	57621-94400	522
REC57621-94403	57621-94403	522
REC57621-94403	57621-94403	522-531
REC57630-92E00	57630-92E00	517-518-531
REC57630-94300	57630-94300	511-531
REC57630-94300	57630-94301	509-531
REC57630-94500	57630-94500	512-531
REC57630-96300	57630-96300	505-507-531
REC57631-93901	57631-93901	499-501-503-523
REC57631-95303	57631-94700	523
REC57631-95303	57631-95301	523
REC57631-95303	57631-95302	523
REC57631-95303	57631-95303	509-511-523
REC57631-96301	57631-96301	507-523
REC57632-94J00	57632-93902	501
REC57632-94J00	57632-94J00	499-503-532
REC57632-97L00	57632-97L00	503-522
REC57632-97L00	57632-98500	522
REC57632-97L00	57632-98501	497-522
REC57633-93901	57633-93900	532

REF	R.O. / OEM	
REC57633-93901	57633-93901	499-501-503-532
REC57634-88L00	57634-88L00	509-511-522
REC59178-97J00	59178-97J00	439-440-499-503-521
REC5W40U3		450
REC5W40U6		450
REC63610-89E01	63610-89E01-000	467
REC63610-91J20	63610-91J00	467
REC63610-91J20	63610-91J01	467
REC63610-91J20	63610-91J03	467
REC63610-91J20	63610-91J04	467
REC63610-91J20	63610-91J20	467
REC63610-93501	63610-93501-000	467
REC63610-94402	63610-94402-000	467
REC63610-96302	63610-96302-000	467
REC63610-96321-000	63610-96321-000	467
REC63P-13907-03	15200-90J00	450
REC63P-13907-03	15200-92J00	450
REC63P-13907-03	15200-93J01	450
REC63P-14984-00	15200-92J00	450
REC650-24351-51		443
REC65720-98520	65720-98500	443
REC65720-98520	65720-98501	443
REC65720-98520	65720-98502	443
REC65720-98520	65720-98520	443
REC65720-98520	65720-98521	443
REC65720-98520	65720-985L1	443
REC65720-986L0	65720-986A0	443
REC65720-986L0	65720-986B0	443
REC65720-986L0	65720-986L0	443
REC65750-94404	65750-94401	443
REC65750-94404	65750-94402	443
REC65750-94404	65750-94403	443
REC65750-94404	65750-94404	443
REC65L-24563-00	15412-93J00	447
REC67200-88L00	67200-88L00	465
REC67200-88L00	67200-93J12	465
REC67200-88L00	67200-93J13	465
REC67200-88L10	67200-88L10	465
REC67200-88L10	67200-93J15	465
REC67200-93J51	67200-93J00	464
REC67200-93J51	67200-93J01	464
REC67200-93J51	67200-93J02	464
REC67200-93J51	67200-93J03	464
REC67200-93J51	67200-93J04	464
REC67200-93J51	67200-93J06	464
REC67200-93J51	67200-93J50	464
REC67200-93J51	67200-93J51	464
REC67200-94J20	67200-91J00	464
REC67200-94J20	67200-91J01	464
REC67200-94J20	67200-91J04	464
REC67200-94J20	67200-94J20	464
REC67200-99E56	67200-99E10-0EP	464
REC67200-99E56	67200-99E30-0EP	464
REC67200-99E56	67200-99E50	464
REC67200-99E56	67200-99E51	464
REC67200-99E56	67200-99E56	464
REC67F-12411-01	17670-93J00	468
REC692-24410-00	15100-94301	450
REC692-24410-00	15100-94303	450
REC692-24410-00	15100-94310	450
REC692-24410-00	15100-94311	450
REC69J-24501-10	15643-93J00	448
REC6E5-24351-51		443
REC70720		447
REC80W90U3	990A0-01E81-01Q	450
REC80W90U6	990A0-01E81-05Q	450
REC855686		445
REC89-825096T01	31800-94400	458
REC89-825096T01	31800-94401	458
REC89-825096T01	38410-89J00	458
REC89-825096T01	38410-94550	458
REC89-825096T01	38410-94551	458
REC89-825096T01	38410-94552	458
REC90171-18M04	09141-18005	509-511-512-513-515-516-517-532
REC90171-18M04	90171-18M04	518
REC90179-08M06	09159-08046	505-507
REC90794-46866	65900-98J00	446
REC90794-46868	15410-98500	448
REC90794-46868	65910-98J00	446
REC91490-40030	08204-03003	439-440-441-497-505-507-509-511-512-513-515-516-517-518-532
REC925093	09280-75002	507
REC93101-22067	09282-22004	490
REC93101-22067	09282-22007	490
REC93606-12019	09202-06031	515-516-517-518
RECOBBRACKET		445
RECOBELEMENT		445
RECOBFILALU		445
RECOBFILTER		445
RECPIN4		463
RECPIN4.5		463
RECPIN6		463
RECTOOLTRIM1		463
RECTOOLTRIM2		463
RECTOOLTRIM3		463

REF	R.O. / OEM	
RECTOOLTRIMKIT		463
RECYS-225-15		446
RM35-802893Q		445
RM92-858026QB1U6		450
RM92-858027QB1U3		450
RM92-8M0086220U6		450
RM92-8M0086221U3		450
S		
SIE18-8013		442
SIE18-8015		442
SOL2431-130-19	58100-95530-019	528
SOL2431-133-17	58100-95521-019	528
SOL2431-135-15	58100-95511-019	528
SOL3411-139-17	58100-90J00-019	528
SOL3411-139-19	58100-90J10-019	528
SOL3411-139-21	58100-90J20-019	528
SOL3413-138-15	58100-90J40-019	528
SOL3413-138-17	58100-90J00-019	528
SOL3413-138-19	58100-90J10-019	528
SOL3413-138-21	58100-90J20-019	528
SOL3451-139-17	58100-90J00-019	528
SOL3451-139-17	99105-00700-18P	528
SOL3451-139-19	58100-90J10-019	528
SOL3451-139-19	99105-00700-20P	528
SOL3451-139-21	58100-90J20-019	528
SOL3451-139-21	99105-00700-22P	528
SOL3451-139-23	58100-90J22-019	528
SOL3451-139-23	99105-00700-24P	528
SOL3452-139-17	99105-0070L-18P	528
SOL3452-139-19	99105-0070L-20P	528
SOL3452-139-21	99105-0070L-22P	528
SOL4011-079-07S	58110-91JN0-019	497-528
SOL4111-093-07A	58100-89L00-019	528
SOL4111-093-08A	58100-90L41-019	528
SOL4111-093-09A	58100-89L20-019	528
SOL4111-093-10A	58100-89L60-019	528
SOL4111-093-11A	58100-89L70-019	528
SOL4111-093-12A	58100-89L50-019	528
SOL4211-100-14	58100-95D00-019	528
SOL4211-100-15	58100-96460-019	528
SOL4211-101-13	58100-96440-019	528
SOL4211-103-12	58100-96430-019	528
SOL4211-105-11	58100-96420-019	528
SOL4211-110-09	58100-96410-019	528
SOL4311-110-15	58100-95363-019	528
SOL4311-116-12	58100-95393-019	528
SOL4311-116-13	58100-94313-019	528
SOL4311-116-14	58100-95353-019	528
SOL4311-118-11	58100-95222-019	528
SOL4311-120-10	58100-95212-019	528
SOL4311-121-09	58100-94302-019	528
SOL4411-130-19	58100-94522-019	528
SOL4411-130-21	58100-94532-019	528
SOL4411-133-17	58100-94512-019	528
SOL4411-135-15	58100-94500-019	528
SOL4411-138-13		528
SOL4411-140-11		528
SOL4413-125-19	58100-94522-019	528
SOL4413-125-21	58100-94532-019	528
SOL4413-128-17	58100-94512-019	528
SOL4413-130-15	58100-94500-019	528
SOL4413-133-13		528
SOL4431-130-19	58100-94522-019	528
SOL4431-130-19	58100-94561-019	528
SOL4431-130-19	99105-00100-20P	528
SOL4431-130-21	58100-94532-019	528
SOL4431-130-21	58100-94571-019	528
SOL4431-130-21	99105-00100-22P	528
SOL4431-133-17	58100-94512-019	528
SOL4431-133-17	58100-94581-019	528
SOL4431-133-17	99105-00100-18P	528
SOL4431-135-15	58100-94500-019	528
SOL4431-135-15	58100-94554-019	528
SOL4431-135-15	99105-00100-16P	528
SOL4511-142-23	99105-00200-24P	529
SOL4511-143-21	99105-00200-22P	529
SOL4511-145-19	99105-00200-20P	529
SOL4511-148-17	99105-00200-18P	529
SOL4511-150-15	99105-00200-16P	529
SOL4511-150-15	58200-87D61-019	529
SOL4511-153-19	99105-00200-20P	529
SOL4511-153-21	99105-00200-22P	529
SOL4511-155-17	99105-00200-18P	529
SOL4512-142-23	99105-0020L-24P	529
SOL4512-143-21	99105-0020L-22P	529
SOL4512-145-19	99105-0020L-20P	529
SOL4512-148-17	99105-0020L-18P	529
SOL4512-150-15	99105-0020L-16P	529
SOL4512-153-19		529
SOL4512-153-21		529
SOL4512-155-17		529
SOL4512-158-15		529
SOL4513-140-21	58200-87D21-019	529
SOL4513-143-19	58200-87D11-019	529
SOL4513-145-17	58200-87D01-019	529
SOL4513-148-15	58200-87D61-019	529
SOL4551-140-24	99105-00200-24P	529
SOL4551-143-22	58200-87D21-019	529
SOL4551-143-22	99105-00200-22P	529
SOL4551-148-16	58200-87D61-019	529
SOL4551-148-16	99105-00200-16P	529
SOL4551-148-18	58200-87D01-019	529
SOL4551-148-18	99105-00200-18P	529
SOL4551-148-20	58200-87D11-019	529
SOL4551-148-20	99105-00200-20P	529
SOL4552-140-24	99105-0020L-24P	529
SOL4552-143-22	58200-87D22-019	529
SOL4552-143-22	99105-0020L-22P	529
SOL4552-148-16	58200-87D62-019	529
SOL4552-148-16	99105-0020L-16P	529
SOL4552-148-18	58200-87D02-019	529
SOL4552-148-18	99105-0020L-18P	529
SOL4552-148-20	58200-87D12-019	529
SOL4552-148-20	99105-0020L-20P	529
SOL4571-148-23		529
SOL4571-149-22		529
SOL4571-151-20		529
SOL4571-154-18		529
SOL4572-148-23		529
SOL4572-149-22		529
SOL4572-151-20		529
SOL4572-154-18		529
SOL9311-110-15		530
SOL9311-111-13		530
SOL9311-111-14		530
SOL9311-114-12		530
SOL9311-116-11		530
SOL9311-120-10		530
SOL9311-121-09		530
SOL9331-110-15		530
SOL9331-111-13		530
SOL9331-111-14		530
SOL9331-114-12		530
SOL9331-116-11		530
SOL9411-132-19		530
SOL9411-132-21		530
SOL9411-133-17		530
SOL9411-135-15		530
SOL9411-138-13		530
SOL9411-140-09		530
SOL9411-140-11		530
SOL9431-130-19		530
SOL9431-130-21		530
SOL9431-133-17		530
SOL9431-135-15		530
SOL9431-138-13		530
SOL9432-130-19		530
SOL9432-133-17		530
SOL9432-135-15		530
SOL9432-138-13		530
SOL9511-143-21		530
SOL9511-145-19		530
SOL9511-148-17		530
SOL9511-150-15		530
SOL9511-153-13		530
SOL9511-155-11		530
SOL9511-160-13		530
SOL9531-140-19		530
SOL9531-140-21		530
SOL9531-140-23		530
SOL9531-143-17		530
SOL9531-145-15		530
SOL9532-140-19		530
SOL9532-140-21		530
SOL9532-140-23		530
SOL9532-143-17		530
SOL9532-145-15		530
SOL9571-145-25		530
SOL9571-148-23		530
SOL9571-150-21		530
SOL9571-153-19		530
SOL9571-155-17		530
SOL9571-158-15		530
SOL9572-145-25		530
SOL9572-148-23		530
SOL9572-150-21		530
SOL9572-153-19		530
SOL9572-155-17		530
SOL9572-158-15		530
SOLRBX-104		529
SOLRBX-110		529
SOLRBX-115		529
SOLRBX-125		529
SOLRBX-126		529
SOLRBX-150		529
T		
TEN01166	11281-94400	479
TEN01200	55125-96310	478
TEN01201	55125-95301	478
TEN01202	55320-98600	478
TEN01203	41810-87D00	479
TEN01204	55320-95310	478
TEN01204	55320-98311	478
TEN01204AL	55320-95310	478
TEN01204AL	55320-98311	478
TEN01205	11130-94600	479
TEN01206	55321-93900	478
TEN01207	55320-98600	478
TEN01207	55321-95500	478
TEN01208	55300-95500	478
TEN01209	55125-94502	479
TEN01209	55321-94502	479
TEN01210	55320-98400	478
TEN01210/1	41811-98500	478
TEN01211	55120-87801	478
TEN01211	55125-87D00	478
TEN01212	55321-90J01	478
TEN01213	55321-87J00	478
TEN01213	55321-87J01	478
TEN01213	55321-87J00	479
TEN01214	55320-94900	478
TEN01214AL	55320-94900	478
TEN01215	55125-90J01	478-512-513-515-516
TEN01215	55125-98J00	517
TRI305-0386		442
TRI305-0566		442
TX4200K		467
TX6400K		467

RO / OEM --> REF

R.O. / OEM	REF	
08110-60020	REC08110-60020	499-501-503-523-524
08110-60050	REC08110-60050	499-501-503-524
08113-60060	REC08113-60060	505-507-524
08204-03003	REC91490-40030	439-440-441-497-505-507-509-511-512-513-515-516-517-518-532
09100-06130	PAGB/T5783-M6X12	515-516
09103-06281	PAGB/T5783-M6X14	476-477-478-479-497
09116-06094	REC09116-06094	479-501-505-509-517
09116-06106	PAGB/T5787-M6X20	507
09116-06121	REC09116-06121	479-505-507
09116-06225	PAGB/T5783-M6X16	497-512
09116-06227	PAGB/T5787-M6X20	499-503
09116-06229	PAGB/T5283-M6X25	497
09116-06229	REC09116-06121	499
09116-08117	PAGB/T5783-M8X55	501
09116-08122	PAGB/T5787-M6X30	505
09116-08151	PAGB/T5783-M8X30	499-503
09116-08156	PAGB/T5787-1986	497
09117-08037	PAGB/T5783-M8X16	507
09117-08047	PAGB/T5783-M8X30	501-509
09117-08057	PAGB/T5783-M8X25	515
09117-08109	PAGB/T5783-M8X16	509-511
09125-04023	PAGB/T818-M4X30	512
09125-05046	PAGB/T8.8-2000	515-516
09125-06063	PAGB/T818-M6X10	501-516
09126-06006	PAGB/T820-M6X20	499-501
09128-06221	PAGB/T818-M6X14	479
09140-04007	PAGB/T889.1-M4	512
09141-06020	PAGB/T6184-2000	507
09141-12005	REC09141-12005	503-532
09141-18005	REC90171-18M04	509-511-512-513-515-516-517-532
09159-08046	REC90179-08M06	505-507
09160-06082	PAGB/T848-6	497-503-505
09160-12066	REC09160-12066	503
09160-20027	REC09160-20027	499-503-526
09160-20041	REC09160-20041	501-503-526
09160-20042	REC09160-20042	499-501-503-526
09160-20043	REC09160-20043	499-501-503-526
09160-20044	REC09160-20044	499-501-503-526
09160-20052	REC09160-20052	491
09160-21009	REC09160-21009	499-501-503-526
09160-26015	REC09160-26015	509-526
09160-27008	REC09160-27008	480-491
09162-06006	PAGB/T848-6	507
09168-10022	REC09168-10022	490-497-501-505-507-509-511-512-515-516-439-440-441
09168-10034	REC09168-10034	513-517-518-521-440-441
09168-12012	REC09168-12012	439-440-441-449
09168-12017	REC09168-12017	439-440-449
09181-24001	REC09181-24001	491
09202-02006	PAGB/T879.1-2.5X14	439
09202-04002	REC09202-04002	509-532
09202-05022	REC09202-05022	511-522
09202-06031	REC93606-12019	515-516-517-518
09202-08006	PAF25-00000014	515-516-517-518
09204-02001	PAGB/T91-1.6X12	439-532
09204-02004	REC09204-02004	439-499-503-532
09209-08016	REC09209-08016	505-507-522
09248-10008	REC09248-10008	497-501-505-507-509-511-512-513-515-516-521
09262-25003	REC09262-25078	503
09262-25078	REC09262-25078	490
09262-30055	REC09262-30055	490
09262-35052	REC09262-35052	480
09263-14014	REC09263-14022	492
09263-14022	REC09263-14022	491
09263-14022	REC09263-18016	491
09263-15019	REC09263-15019	501-524
09263-20024	REC09263-20L04	525
09263-20046	REC09263-20046	505-507-524
09263-20047	REC09263-20047	505-507-524
09263-20051	REC09263-20051	491
09263-20072	REC09263-20072	480-491-492
09263-20L04	REC09263-20L04	499-501-503-525
09263-22020	REC09263-22020	509-511-524
09263-22039	REC09263-22L03	509-511-524
09263-22L03	REC09263-22L03	524
09263-24018	REC09263-24018	491
09263-25025	REC09263-25025	509-523
09263-25048	REC09263-25025	523
09263-25062	REC09263-25062	509-523
09263-25L02	REC09263-25025	523
09263-27005	REC09263-27005	480-491
09265-17002	REC09265-17002	505-507-524
09269-30012	REC09269-30012	480-490
09280-08005	REC09280-08005	520
09280-11001	REC09280-11005	520
09280-11005	REC09280-11005	520
09280-22019	REC09280-22019	439-440-441-476-478-479
09280-33005	PAJASOF404-19-033	439
09280-54001	REC09280-54001	439-449
09280-56001	REC09280-54001	449
09280-57002	REC09280-57002	499-501-503-521
09280-75001	REC09280-75001	505-509-511-521
09280-75002	REC925093	507
09282-10008	REC09282-10008	488-497
09282-12010	REC09282-12010	489
09282-15008	REC09282-15008	489
09282-17005	REC09282-17005	489-509-511
09282-17009	REC09282-17009	489
09282-22004	REC93101-22067	490
09282-22007	REC93101-22067	490
09283-10003	REC09283-10003	489
09283-10009	REC09283-10009	489
09283-17002	REC09283-17002	488
09283-20018	REC09283-20018	488
09283-20045	REC09283-20045	489
09283-25035	REC09283-25035	489
09283-25075	REC09283-25075	489
09283-25075	REC09283-25076	489
09283-30062	REC09283-30062	480-489
09283-30064	REC09283-30064	489
09283-35043	REC09283-35043	480-489
09289-10005	REC09289-10005	489
09289-12002	REC09289-12002	489
09289-12003	REC09289-12003	490-501
09289-17004	REC09289-17004	489
09289-17006	REC09289-17006	489-501
09289-17L02	REC09289-17006	499-503
09289-20009	REC09289-20009	489-505-507
09289-22007	REC09289-22007	490-509-511
09289-30008	REC09289-30008	490
09380-15001	REC09380-15001	499-501-503-524
09381-20003	REC09381-20003	480
09401-11425	REC09401-11425	443
09420-03002	REC09420-03002	470-497
09420-03009	REC09420-03005	470-499-503
09420-04006	REC09420-04006	470-505-507-509-511
09420-05009	REC09420-05009	470-515-516-517-518-440-441-470
09440-05027	REC09440-05027	501-522
09440-08043	REC09440-08043	511-522
09440-32008	REC09440-32008	501-522
09440-40002	REC09440-40002	509-511-522
09482-00299	NGKBPR6ES	439-440-455
09482-00406	NGKCR6HSA	439-455
09482-00427	NGKBKR6E	439-440-441-455
09482-00446	NGKDCPR6E	440-455
09482-00528	NGKCR6E	439-455
09482-00649	NGKLKR6E	455
09482-00L04	NGKCPR6EA-9	439-440-455
11130-94600	CM11130-94600	477-479
11130-94600	CM11130-94600A	477
11130-94600	TEN01205	479
11141-87D32	REC11141-87D92	487
11141-87D61	REC11141-87D90	487
11141-87D90	REC11141-87D90	487
11141-87D90	REC11141-87E90	487
11141-87E20	REC11141-87E90	487
11141-87J00	REC11141-87J02	483-484
11141-87J01	REC11141-87J02	483-484
11141-87J02	REC11141-87J02	481-483-484
11141-87L00	REC11141-87L00	482-483-484
11141-90J00	REC11141-90J01	483
11141-90J01	REC11141-90J01	484
11141-91J01	REC11141-91JL0	483-484
11141-91J02	REC11141-91JL0	483-484
11141-91JL0	REC11141-91JL0	483-484
11141-92J00	REC11141-92J01	483-484
11141-93950	REC11141-93960	487
11141-93E20	REC11141-93E20	483-484
11141-93J03	REC11141-93J10	483-484
11141-94440	REC11141-94450	487
11141-94450	REC11141-94450	487
11141-94506	REC11141-94506	487
11141-94620	REC11141-94506	487
11141-94701	REC11141-94720	487
11141-94720	REC11141-94720	487
11141-95505	REC11141-95505	487
11141-95621	REC11141-95505	487
11141-95D40	REC11141-95D40	487
11141-95J00	REC11141-95J00	483-484
11141-96343	REC11141-96344	487
11141-96344	REC11141-96303	487
11141-96344	REC11141-96344	487
11141-97J01	REC11141-97J02	483
11141-97JL0	REC11141-97J02	483-484
11141-98130	REC11141-98130	487
11141-98401	REC11141-98401	487
11141-98411	REC11141-98401	487
11141-98J01	REC11141-98J10	483-484
11142-93J03	REC11142-93J10	483-484
11142-98J00	REC11141-98J10	484
11142-98J00	REC11142-98J10	483
11151-87L00	REC14151-87L00	482
11162-94410	REC11162-94410	488
11189-87J00	REC11189-87J00	481-486
11189-87L00	REC11189-87L00	482-486
11265-87E00	REC11265-87E10	479
11265-87E00-H17	REC11265-87E10	479
11265-87E10	REC11265-87E10	481
11281-94400	TEN01166	479
11400-87800	REC11400-87804	484
11400-87801	REC11400-87804	484
11400-87802	REC11400-87804	484
11400-87803	REC11400-87804	484
11400-87804	REC11400-87804	481-484
11410-87850	REC11410-87851	484
11410-87851	REC11410-87851	482-484
11413-87J00	REC11413-87J00	481-486
11433-87J00	REC11433-87J00	481-486
11433-93901	REC11433-93912	488
11433-94401	REC11433-94412	488
11433-96302	REC11433-96330	488
11434-94411	REC11434-94411	495
11489-87J00	REC11489-87J00	481-493
11489-87L00	REC11489-87L00	482-493
11489-90J00	REC11489-90J00	493
11489-93E10	REC11489-93E11	493
11489-93J00	REC11489-93J00	493
11542-87L00	REC11542-87L00	482-493
11552-87L00	REC11552-87L00	485
12110-93130	REC12110-93130K	492
12110-94350	REC12110-94350K	492
12110-94400K	REC12110-94400K	480-492
12140-93121	REC12140-93121	492
12140-94400	REC12140-94400	480-492
12151-94400	REC12151-94400	480
12161-93902	REC12161-93902	491
12161-94400	REC12161-94400	480-491
12161-96300	REC12161-96300	491
12211-94410	REC12211-94410	480
12221-94412	REC12221-94412	480-490
12231-94413	REC12231-94413	480-490
12232-94412	REC12232-94412	480-490
12240-94432	REC12240-94432	480-490
12710-97J00	REC12710-97J00	483
12761-72F00	REC12761-72F00	492
12761-93EL0	REC12761-93EL0	492
12761-99J00	REC12761-99J00	492
12778-93J00	REC12778-93J00	485
13119-93J00	REC13119-93J00	494
13122-95J00	REC13122-95J00	494
13147-98J00	REC13147-98J00	493
13200-91D20	REC13200-91D21	453
13200-91D21	REC13200-91D21	453
13200-91J70	REC13200-91J70	453
13250-95D01	REC13250-95D01	453
13421-87J00	REC13421-87J00	481-485
13421-98J00	REC13421-98J00	485

R.O. / OEM	REF	
13650-52G00	REC13650-52G00	454
13650-56B00	REC13650-56B00	454
13910-87D00	REC13910-87D00	453
13910-89J01	REC13910-89J01	453
13910-94400	REC13910-94400	453
13910-94701	REC13910-94701	453
14141-93952-0EP	REC14141-93952-0EP	495
14151-87L00	REC14151-87L00	494
14151-93901	REC14151-93912	495
14151-93J00	REC14151-93J00	494
14151-94412	REC14151-94411	495
14151-96310	REC14151-96311	495
14152-93J00	REC14152-93J00	494
14212-91L00	REC14212-91L00	495
14212-93J00	REC14212-93J00	494
14212-94412	REC14212-94413	495
14212-96310	REC14212-91L00	495
15100-91J00	PAF4-04090000	450
15100-91J01	PAF4-04090000	450
15100-91J02	PAF4-04090000	450
15100-94301	REC692-24410-00	450
15100-94303	REC692-24410-00	450
15100-94310	REC692-24410-00	450
15100-94311	REC692-24410-00	450
15170-91J00	REC15170-91J00	451
15170-93920	REC15170-93911	451
15170-94320	REC15170-94320	451
15170-94J00	REC15170-94J00	451
15170-98110	REC15170-98110	451
15170-99E00	REC15170-99E00	451
15200-90J00	REC63P-13907-03	450
15200-92J00	REC63P-13907-03	450
15200-92J00	REC63P-14984-00	450
15200-92J00	REC15200-82J20	451
15200-92J20	REC15200-82J20	451
15200-93J01	REC63P-13907-03	450
15200-96J00	REC15200-96J00	450
15410-87J10	REC15410-87J00	448
15410-87J10	REC15410-87J10	440-447
15410-87J30	REC15410-87J30	439-440-441-447
15410-87L00	REC15410-87L00	439-440-447
15410-88L00	REC15410-88L00	440-448
15410-93J00	REC15410-93J00	448
15410-94350	REC16910-GB2-005	448
15410-94400	PAF15-07080000	447
15410-96J00	REC15410-96J00	441-447
15410-98500	REC15410-98500	439-448
15410-98500	REC90794-46868	448
15412-92J00	REC15412-92J00	441-448
15412-93J00	REC65L-24563-00	447
15412-93J10	REC15412-93J10	441-448
15440-87L10	REC15440-87L10	448
15440-90J00	REC15440-90J00	448
15440-93J00	REC15440-93J00	448
15440-96J00	REC15440-96J00	448
15440-96J01	REC15440-96J01	448
15440-99E00	REC15440-99E01	449
15440-99E01	REC15440-99E01	449
15626-90J00	REC15626-90J00	451
15626-99E00	REC15626-99E00	451
15643-93J00	REC69J-24501-10	448
15643-99E00	REC15626-99E00	451
15710-50M00	REC15710-89L00	451
15710-65D00	REC15710-65D00	452
15710-66D00	REC15710-66D00	452
15710-82K50	REC15710-82K50	453
15710-82M00	REC15710-82M00	452
15710-85K00	REC15710-85K00	452
15710-87J00	REC15710-87J00	452
15710-87L00	REC15710-87L00	452
15710-89L00	REC15710-89L00	452
15710-93J00	REC15710-93J00	453
15710-96J00	REC15710-96J00	453
15710-99E00	REC15710-99E00	452
16433-93J00	REC16433-93J00	485
16510-05240	REC16510-05240	449
16510-05240	REC16510-05240	439-449
16510-45H10	REC16510-05240	449
16510-61A01	REC16510-90J00	449
16510-61A20-MHL	REC16510-90J00	449
16510-61A21-MHL	REC16510-90J00	449
16510-61A30	REC16510-90J00	449
16510-61A31	REC16510-90J00	449
16510-81420	REC16510-82703	449
16510-82703	REC16510-82703	449
16510-87J00	REC16510-87J00	449

R.O. / OEM	REF	
16510-87J00	REC16510-87J00	439-440-449
16510-87JL0	REC16510-87J00	449
16510-90J00	REC16510-90J00	449
16510-90J00	REC16510-90J00	440-441-449
16510-92J00	REC16510-82703	449
16510-96J00	REC16510-93J00	449
16510-96J00	REC16510-96J00	449
16510-96J10	REC16510-93J00	449
16510-96J10	REC16510-96J00	441
16510-96J10	REC16510-96J00	449
16539-87L00	REC16539-87L00	482-485
17400-87811	REC17400-87810	440
17400-87820	REC17400-87820	440
17400-87D00	REC17400-87D11	474
17400-87D10	REC17400-87D11	474
17400-87D11	REC17400-87D11	474-476
17400-87E03	REC17400-87E04	440-474-476-512
17400-87L00	REC17400-87L01	475
17400-87L01	REC17400-87L01	440-475-476-513
17400-88810	REC17400-88810	440
17400-88L00	REC17400-88L00	440-475-476-511
17400-89810	REC17400-89810	439
17400-89820	REC17400-89820	440
17400-90J11	REC17400-90J20	475
17400-90J20	REC17400-90J20	476-515
17400-91830	REC17400-91830	439
17400-91860	REC17400-91860	439
17400-92821	REC17400-92821	441
17400-92840	REC17400-92840	440
17400-92850	REC17400-92850	441
17400-92D01	REC17400-92D01	474-476
17400-92D11	REC17400-92D01	474
17400-92J200	REC17400-92J00	475-476
17400-92J21	REC17400-92J21	440-441-475476--515-516
17400-93851	REC17400-93851	441
17400-93911	REC17400-93912	475
17400-93912	REC17400-93912	475
17400-93950	REC17400-93951	474-501
17400-93951	REC17400-93951	476-501
17400-93J00	REC17400-93J01	474
17400-93J01	REC17400-93J01	441-474-476
17400-93J02	REC17400-93J01	474
17400-93J03	REC17400-93J01	474
17400-94611	REC17400-94611	475-476
17400-94700	REC17400-94701	474
17400-94701	REC17400-94701	474-476
17400-94810	REC17400-94810	439
17400-94821	REC17400-94821	440
17400-94J200	REC17400-94J00	439-476
17400-94L00	REC17400-94L00	440-475-476
17400-95350	REC17400-95351	474
17400-95351	REC17400-95351	474-476
17400-95550	REC17400-95351	474
17400-95870	REC17400-95870	439
17400-95J01	REC17400-95J02	476
17400-95J02	REC17400-95J02	439-476-505
17400-96350	REC17400-96403	474
17400-96351	REC17400-96403	474
17400-96352	REC17400-96403	474-507
17400-96353	REC17400-96403	509
17400-96403	REC17400-96403	440-474-476-509
17400-96821	REC17400-96821	441
17400-96J00	REC17400-96J03	475
17400-96J01	REC17400-96J03	475
17400-96J02	REC17400-96J03	475
17400-96J03	REC17400-96J03	441-475-476-517
17400-97810	REC17400-97810	439
17400-97821	REC17400-97820	439
17400-98551	REC17400-98551	474-476
17400-98652	REC17400-98652	474-476
17400-98661	REC17400-98652	474
17400-98661	REC17400-98661	439-474-476-497
17400-986L0	REC17400-98661	474
17400-986L1	REC17400-98661	474
17400-98861	REC17400-98861	441
17400-98J00	REC17400-98J01	474
17400-98J01	REC17400-98J01	474-518
17400-98J02	REC17400-98J01	441-474-476
17400-99840	REC17400-99840	439
17400-99870	REC17400-99870	440
17400-99J00	REC17400-99J01	475

R.O. / OEM	REF	
17400-99J01	REC17400-99J01	439-475-476-499-503
17410-93910	REC17411-93901	471
17410-94431	REC17411-94421	471
17411-93901	REC17411-93901	471-501
17411-94421	REC17411-94421	471-507-509
17413-92J00	REC17413-92J01	473
17413-92J01	REC17413-92J01	473-515-516
17413-95J00	REC17413-95J00	439-473-505-511
17413-96J00	REC17413-96J01	473
17413-96J01	REC17413-96J01	441-473-517
17413-99E10	REC17413-99E11	512-513
17413-99E11	REC17413-99E11	473
17416-92J00	REC17416-92J00	515
17416-92J10	REC17416-92J10	472-515-516
17416-93J00	REC17416-93J00	472-518
17416-95J00	REC17416-95J00	472-505-511
17416-96J00	REC17416-96J00	472-517
17416-99E10	REC17416-99E10	472-513
17417-92J00	REC17417-92J00	472-515
17431-92L20	REC17431-92L20	521
17431-94440	REC17431-92L20	521
17431-94441	REC17431-92L20	521
17450-93440	REC17450-93921	471
17450-93920	REC17450-93921	471
17450-93921	REC17450-93921	471-501
17450-93930	REC17450-93921	471
17451-96301	CEF500362G	469
17451-96301	REC17461-96312	469
17452-93910	REC17452-93910	473-501
17453-93900	REC17453-93901	501-521
17453-93901	REC17453-93901	521
17461-87E10	CEF500365	470
17461-87E10	REC17461-87E12	470
17461-87E11	CEF500365	470
17461-87E11	REC17461-87E12	470
17461-87E12	CEF500365	469-470
17461-87E12	REC17461-87E12	469-470-512-513
17461-90J00	CEF500367	469
17461-90J00	REC17461-90J01	469
17461-90J01	CEF500367	469-470
17461-90J01	REC17461-90J01	469-470-515-516-517
17461-92D02	CEF500319	469
17461-92D02	REC17461-92D02	469
17461-93001	CEF500398	469
17461-93001	REC17461-93004	469
17461-93002	CEF500398	469
17461-93002	REC17461-93004	469
17461-93003	CEF500398	469
17461-93003	REC17461-93004	469
17461-93004	CEF500398	469
17461-93004	REC17461-93004	469
17461-93901	CEF500329	469
17461-93901	REC17461-93903	469
17461-93902	CEF500329	469
17461-93902	REC17461-93903	469
17461-93903	CEF500329	469-470
17461-93903	REC17461-93903	470
17461-93903	REC17461-93903	469-470-501-503
17461-939M0	REC17461-93903	499
17461-93J00	CEF500393	470
17461-93J00	REC17461-93J00	470-518
17461-94510	CEF500367	469
17461-94510	REC17461-90J01	469
17461-94700	CEF500361	469
17461-94700	REC17461-94700	469
17461-94701	CEF500361	469
17461-94701	REC17461-94700	469
17461-94L00	REC17461-96312	470
17461-95200	CEF500361	469
17461-95200	REC17461-94700	469
17461-95201	CEF500312	469
17461-95201	REC17461-94700	469
17461-95300	CEF500360	469
17461-95300	REC17461-95300	469
17461-95301	CEF500360	469
17461-95301	REC17461-95300	469
17461-95302	CEF500360	469
17461-95303	REC17461-95300	469
17461-95501	CEF500360	469
17461-95501	REC17461-95300	469
17461-96301	CEF500362G	469
17461-96301	REC17461-96312	469
17461-96310	CEF500362G	469

R.O. / OEM	REF	
17461-96310	**REC17461-96312**	469
17461-96312	**CEF500362G**	470
17461-96312	**REC17461-96312**	470-505-507-509-511
17461-96400	**CEF500399**	469
17461-97110	**REC17461-97JM0**	439-470
17461-98501	**CEF500336**	469
17461-98501	**REC17461-98503**	469
17461-98502	**CEF500336**	469
17461-98502	**REC17461-98503**	469
17461-98503	**CEF500336**	469-470
17461-98503	**REC17461-98503**	469-470
17461-985M0	**REC17461-98503**	470-497
17462-93990	**REC17462-93990**	470-501
17471-87E00	**REC17471-92J00**	471
17471-87E01	**REC17471-92J00**	471-512
17471-92J00	**REC17471-92J00**	471-515-516
17471-93902	**REC17471-93902**	471-501
17471-93J00	**REC17471-92J02**	471
17471-93J01	**REC17471-92J02**	471
17471-93J02	**REC17471-92J02**	471-517
17471-94401	**REC17471-94401**	471-507-509
17471-95J00	**REC17471-95J01**	471
17471-95J01	**REC17471-95J01**	471-505-511
17471-97J00-00	**REC17471-97J00**	439-471
17471-97JL0	**REC17471-97JL0**	439-471
17471-98600	**REC17471-98601**	471
17471-98601	**REC17471-98601**	471
17472-87E00	**REC17472-87E10**	472
17472-87E10	**REC17472-87E10**	472-512-515-516
17472-87L00	**REC17472-87L00**	472-482-513
17472-91J00	**REC17472-91J00**	473-497
17472-92D10	**REC17472-92D10**	473
17472-93911	**REC17472-93911**	473-501
17472-93J00	**REC17472-93J00**	473-517
17472-95310	**REC17472-95310**	473
17472-96301	**REC17472-96303**	472
17472-96302	**REC17472-96303**	472
17472-96303	**REC17472-96303**	472-481-505-507-509-511
17472-97J00	**REC17472-97J00**	439-472
17472-97JL0	**REC17472-97JL0**	439-472
17472-98503	**REC17472-98503**	473
17472-98611	**REC17472-98611**	473
17472-98J00	**REC17472-98J00**	472-518
17560-91L00	**REC17560-91L00**	521
17560-96300	**REC17560-91L00**	521
17560-96301	**REC17560-91L00**	521
17560-96304	**REC17560-91L00**	521
17616-87J00	**REC17616-87J00**	468-481-486
17670-90J20	**REC17670-90J20**	468
17670-91J00	**REC17670-91J01**	468
17670-91J01	**REC17670-91J01**	468
17670-93962	**REC17670-93962**	468
17670-93J00	**REC67F-12411-01**	468
17670-94402	**REC17670-94402**	468
17670-94J00	**REC17670-94J01**	468
17670-94J01	**REC17670-94J01**	468
17685-87D00	**REC17685-87D10**	486-488
17685-87D10	**REC17685-87D10**	481-486-488
17693-95J00	**REC17693-95J00**	485
1770-90J10	**REC17670-90J10**	468
17822-90J00	**REC09401-11425**	443
17822-90J00	**REC09401-11425BULK**	443
17913-93J00	**REC17913-93J00**	469
17914-93J00	**REC17914-93J00**	469
17914-93JL0	**REC17914-93J00**	469
18137-52D00	**REC18137-52D00**	452-454
18137-87L01	**REC18137-87L01**	452-454
18137-88L01	**REC18137-88L01**	452-454
18137-93J00	**REC18137-93J00**	452-454
18590-58M00	**REC18590-58M00**	452-454
18590-68H00	**REC18590-68H00**	452-454
18590-72F21	**REC18590-72F21**	452-454
23211-94401	**REC23211-94401**	523
23311-95DL0	**REC23311-95DL0**	520
25222-93901	**REC25222-93901**	520
25222-96300	**REC25222-96300**	520
25700-87D00	**REC25700-87D00**	519-520
25700-87E00	**REC25700-87E00**	519-520
25700-87L00	**REC25700-87L00**	513-519-520
25700-88400	**REC25700-88L00**	519
25700-88L00	**REC25700-88L00**	509-511-520
25700-90J01	**REC25700-90J01**	515-520
25700-92J00	**REC25700-92J00**	515-516-519-520
25700-93J00	**REC25700-93J00**	517-519-520
25700-93L00	**REC25700-93L00**	518-519-520

R.O. / OEM	REF	
25700-94400	**REC25700-88L00**	519
25700-94500	**REC25700-94500**	520
25700-94700	**REC25700-94700**	519-520
25700-95500	**REC25700-95501**	519-520
25700-95D00	**REC25700-95D01**	519
25700-95D01	**REC25700-95D01**	507-519-520
25700-95J00	**REC25700-95J00**	505-519-520
25700-98J00	**REC25700-98J00**	519-520
25700-99E00	**REC25700-99E00**	512-519-520
29116-93J00	**PAGB/T5787-M6X20**	501
29116-93J10	**PAF8-00000003**	513
29141-93J00	**PAGB/T6170-M6**	497-499-501-505-509-511
29141-93J00	**PAGB/T6184-2000**	503
29162-93J00	**PAGB/T93-6**	499-501-509-511
31100-87000	**PH130-0052**	457
31100-87500	**PH130-0079**	458
31100-87D00	**PH130-0052**	457
31100-87D10	**PH130-0052**	457
31100-87J00	**PH130-0079**	458
31100-87J10	**PH130-0079**	458
31100-87J11	**PH130-0079**	458
31100-89J00	**PH130-0006**	457
31100-90J00	**PH130-0071**	457
31100-90J01	**PH130-0071**	457
31100-92E00	**PH130-0052**	457
31100-93J00	**PH130-0078**	458
31100-94400	**PH130-0006**	457
31100-944002	**PH130-0006**	457
31100-94401	**PH130-0006**	457
31100-94500	**PH130-0053**	457
31100-94510	**PH130-0053**	457
31100-94511	**PH130-0053**	457
31100-94512	**PH130-0053**	457
31100-94600	**PH130-0053**	457
31100-94601	**PH130-0053**	457
31100-94610	**PH130-0053**	457
31100-94702	**PH130-0075**	457
31100-94J10	**PH130-0077**	457
31100-94J20	**PH130-0077**	457
31100-94J21	**PH130-0077**	457
31100-94J22	**PH130-0077**	457
31100-95240	**PH130-0007**	457
31100-95242	**PH130-0007**	457
31100-95243	**PH130-0007**	457
31100-95310	**PH130-0060**	457
31100-95312	**PH130-0060**	457
31100-95313	**PH130-0060**	457
31100-95521	**PH130-0060**	457
31100-95600	**PH130-0060**	457
31100-95601	**PH130-0060**	457
31100-95D00	**PH130-0006**	457
31100-95J00	**PH130-0077**	457
31100-95J01	**PH130-0077**	457
31100-96310	**PH130-0006**	457
31100-96311	**PH130-0006**	457
31100-96J00	**PH130-0078**	458
31100-96J01	**PH130-0078**	458
31100-98L00	**PH130-0078**	458
31100-98L10	**PH130-0078**	458
31100-98L10	**REC31100-98L10**	458
31800-94400	**REC89-825096T01**	458
31800-94401	**REC89-825096T01**	458
32140-93900	**REC32140-93900**	455
32140-94400	**REC32140-94400**	455
32140-96310	**REC32140-96310**	455
32800-38F10	**REC32800-38F10**	459
32800-87J10	**REC32800-87J10**	459
32800-87L00	**REC32800-87L00**	459
32800-88L00	**REC32800-88L00**	459
32800-89J00	**REC32800-89J00**	459
32800-89J10	**REC32800-89J11**	459
32800-89J11	**REC32800-89J11**	459
32800-89J11	**REC32800-89J11**	459
32800-89L00	**REC32800-89L01**	459
32800-89L01	**REC32800-89L01**	459
32800-89L01	**REC32800-89L01**	459
32800-92E20	**REC32800-92E20**	459
32800-93J01	**REC32800-93J03**	459
32800-93J02	**REC32800-93J03**	459
32800-93J03	**REC32800-93J03**	459
32800-93J03	**REC32800-93J03**	459
32800-94620	**REC32800-94620**	458
32800-94620	**REC32800-94620**	459
32800-94J10	**REC32800-94J11**	459
32800-94J11	**REC32800-94J11**	459
32800-95720	**REC32800-95D01**	458

R.O. / OEM	REF	
32800-95D00	**REC32800-95D01**	458
32800-95D01	**REC32800-95D01**	458-459
32800-98J01	**REC32800-98J01**	459
32800-99J00	**REC32800-99J00**	459
32900-93902	**REC32900-93903**	455
32900-93903	**REC32900-93903**	455
32900-93911	**REC32900-93910**	460
32900-94401	**REC32900-94480**	455
32900-94421	**REC32900-94480**	455
32900-94460	**REC32900-94460**	460
32900-94470	**REC32900-94460**	460
32900-94480	**REC32900-94480**	455
32900-96340	**REC32900-96340**	455
32900-96350	**REC32900-96371**	460
32900-96370	**REC32900-96371**	460
32900-96371	**REC32900-96371**	460
33220-58J20	**REC33220-58J20**	454
33220-76G00	**REC33220-76G02**	454
33220-76G01	**REC33220-76G02**	454
33220-76G02	**REC33220-76G02**	454
33410-93E10	**REC33410-94400-000**	455
33410-93J00	**REC33410-93J00**	455
33410-94400-000	**REC33410-94400-000**	455
33410-96L00	**REC33410-96L00**	455
34801-93J00	**REC34801-93J03**	463
34801-93J01	**REC34801-93J03**	463
34801-93J02	**REC34801-93J03**	463
34801-93J03	**REC34801-93J03**	463
34801-94700	**REC34801-94710**	463
34801-94710	**REC34801-94710**	463
34801-99E01	**REC34801-99E04**	463
34801-99E02	**REC34801-99E04**	463
34801-99E03	**REC34801-99E04**	463
34801-99E04	**REC34801-99E04**	463
36620-93J02	**REC36620-93J02**	466
36620-94J01	**REC36620-94J01**	466
37100-87J00-OEP	**REC38100-87J00**	462
37100-96J14	**REC37100-96J15**	465
37100-96J15	**REC37100-96J15**	465
37100-96J20	**REC37100-96J25**	465
37100-96J21	**REC37100-96J25**	465
37100-96J22	**REC37100-96J25**	465
37100-96J23	**REC37100-96J25**	465
37100-96J24	**REC37100-96J25**	465
37100-96J25	**REC37100-96J25**	465
37110-93J10	**REC37110-93J11**	458
37110-93L10	**REC37110-93J11**	458
37110-99E00	**REC37110-99E00**	458
37220-92E00	**REC37220-92E00**	465
37800-93953	**REC37800-93954**	460
37800-93954	**REC37800-93954**	460
37820-92E00	**REC37820-92E03**	460
37830-89E02	**REC37830-89E03**	460
37830-95000	**REC37830-89E03**	460
37830-95D00	**REC37830-95D04**	460
37830-95D01	**REC37830-95D04**	460
37830-95D02	**REC37830-95D04**	460
37830-95D03	**REC37830-95D04**	460
37830-95D04	**REC37830-95D04**	460
37850-90J00	**REC37850-90J06**	464
37850-90J01	**REC37850-90J06**	464
37850-90J02	**REC37850-90J06**	464
37850-90J03	**REC37850-90J06**	464
37850-90J04	**REC37850-90J06**	464
37850-90J05	**REC37850-90J06**	464
37850-90J06	**REC37850-90J06**	464
37850-93J10	**REC37850-93J10**	465
38100-87D00	**REC38100-87E10-OED**	461
38100-87D01-02M	**REC38100-87E10-OED**	461
38100-87D01-0ED	**REC38100-87E10-OED**	461
38100-87D02H	**REC38100-87E10-OED**	461
38100-87D0IT	**REC38100-87E10-OED**	461
38100-87D10-0ED	**PH200-T024**	462
38100-87D10-0IT	**PH200-T024**	462
38100-87D10-35J	**PH200-T024**	462
38100-87E10-0ED	**REC38100-87E10-OED**	461
38100-87E20-0ED	**PH200-T024**	462
38100-87J11	**PH200-T046**	462
38100-87J20	**PH200-T046**	462
38100-87JOEP	**REC38100-87J00**	462
38100-87L00	**REC36120-ZY9-003**	462
38100-87L01	**REC36120-ZY9-003**	462
38100-87L02	**REC36120-ZY9-003**	462
38100-87L03	**REC36120-ZY9-003**	462
38100-88L00	**REC36120-ZW4-H12**	462
38100-88L11	**REC36120-ZW4-H12**	462
38100-88L12	**REC36120-ZW4-H12**	462

R.O. / OEM	REF	
38100-90J30	**REC36120-ZY6-013**	462
38100-90J40	**REC36120-ZY6-013**	462
38100-92E00-0ED	**PH200-T024**	462
38100-92J01	**REC38100-96J00**	461
38100-92J02	**REC38100-96J00**	461
38100-92J10	**REC38100-96J00**	461
38100-92J12	**REC38100-96J00**	461
38100-93J02	**REC38100-96J00**	461
38100-93J11	**REC36120-ZY6-013**	462
38100-93J13	**REC36120-ZY6-013**	462
38100-96J00	**REC38100-96J00**	461
38100-96J01	**REC38100-96J00**	461
38100-97E00-0ED	**REC38100-97E00-0ED**	462
38100-99E01-00	**REC38100-99E01-0EP**	462
38100-99E01-0ED	**REC38100-99E01-0EP**	462
38100-99E01-0EP	**REC38100-99E01-0EP**	462
38410-89J00	**REC89-825096T01**	458
38410-93J00	**REC38410-93J12**	463
38410-93J10	**REC38410-93J12**	463
38410-93J11	**REC38410-93J12**	463
38410-93J12	**REC38410-93J12**	463
38410-94550	**REC89-825096T01**	458
38410-94551	**REC89-825096T01**	458
38410-94552	**REC89-825096T01**	458
38860-76F01	**REC38860-76F01**	460
41810-87D00	**TEN01203**	479
41810-98500	**CM5033167**	439
41811-98500	**CM41811-98500**	476-501
41811-98500	**TEN01210/1**	478
43211-87JL0	**REC43211-87JL0**	466
43211-94401	**REC43211-87JL0**	466
43211-94401	**REC43211-94401**	466
43711-97E00	**REC43711-97E11**	466
43711-97E11	**REC43711-97E11**	466
48500-95550-0ED	**PH200-T027**	461
48500-95680-0ED	**PH200-T027**	461
48503-93J10	**REC48503-93J12**	462
48503-93J12	**REC48503-93J12**	462
48503-94900-0ED	**REC48503-93J12**	462
48600-94511-0ED	**REC18-6865**	462
48630-92J00	**REC48630-92J00**	463
48630-93J00	**REC48630-93J00**	463
48630-94900	**REC48630-94900**	463
48630-96J00	**REC48630-96J00**	463
48630-96J01	**REC48630-96J03**	463
48630-96J02	**REC48630-96J03**	463
48630-96J03	**REC48630-96J03**	463
48630-98L00	**REC48630-98L01**	463
48630-98L01	**REC48630-98L01**	463
51123-87L00	**REC51123-87L00**	482-486
51123-93J00	**REC51123-93J00**	485
51142-93J00	**REC51142-93J00**	485
51211-87J00	**REC51211-87J00**	481-484
51211-87L00	**REC51211-87L10**	482-484
51211-87L10	**REC51211-87L10**	482-484
51211-90J00	**REC51211-90J10**	484
51211-90J01	**REC51211-90J10**	484
51211-90J02	**REC51211-90J10**	484
51211-90J10	**REC51211-90J10**	484
51211-90J21	**REC51211-90J2**	484
51211-90J22	**REC51211-90J2**	484
51211-93J00	**REC51211-93J00**	484
52113-93901	**REC52113-93910**	495
52113-96304	**REC52113-96330**	495
52331-87L00	**REC52331-87L00**	482-494
55120-87801	**TEN01211**	478
55122-88L00	**REC55122-94400**	473-511
55125-87801	**CM55125-87D00**	477
55125-87801	**CM55125-87D00A**	477
55125-87D00	**TEN01211**	478
55125-87E01	**CM55125-95500**	477
55125-87E01	**CM55125-95500A**	477
55125-90J01	**TEN01215**	478-512-513-515-516
55125-94400	**CM55125-94400**	511
55125-94502	**CM55125-94502**	477
55125-94502	**TEN01209**	479
55125-95301	**CM55125-95301A**	477
55125-95301	**TEN01201**	478
55125-95500	**CM55125-95500**	509
55125-96310	**CM55125-96310**	477-505-507
55125-96310	**CM55125-96310A**	477
55125-96310	**TEN01200**	478
55125-98J00	**TEN01215**	517
55128-93J00	**REC55128-93J10**	521
55128-93J10	**REC55128-93J10**	517-521

R.O. / OEM	REF	
55300-95500	**CM55300-95500**	476-499-501-507-509-511
55300-95500	**CM55300-95500A**	476
55300-95500	**TEN01208**	478
55320-93900	**CM55125-87D00**	477
55320-93900	**CM55125-87D00A**	477
55320-93900	**CM55321-93900**	477
55320-93900	**CM55321-93900A**	477
55320-94900	**CM55321-94900**	476
55320-94900	**CM55321-94900A**	441
55320-94900	**CM55321-94900A**	476
55320-94900	**TEN01214**	478
55320-94900	**TEN01214AL**	478
55320-95310	**CM55320-95310**	476
55320-95310	**CM55320-95310A**	476
55320-95310	**TEN01204**	478
55320-95310	**TEN01204AL**	478
55320-95311	**CM55320-95310**	517
55320-98311	**TEN01204**	478
55320-98311	**TEN01204AL**	478
55320-98400	**CM55320-98400**	476
55320-98400	**CM55320-98400A**	476
55320-98400	**TEN01210**	478
55320-98600	**CM55320-98600**	477
55320-98600	**CM55320-98600A**	477
55320-98600	**TEN01202**	478
55320-98600	**TEN01207**	478
55321-87J00	**CM55321-87J00**	476-497-501-511
55321-87J00	**CM55321-87J00A**	476
55321-87J00	**TEN01213**	478
55321-87J00	**TEN01213**	479
55321-87J01	**CM55321-87J00**	476-479-499-503
55321-87J01	**CM55321-87J00A**	476
55321-87J01	**CM55321-87J00A**	439-440-441
55321-87J01	**TEN01213**	478
55321-90J01	**CM55321-90J01**	477-512-515-516
55321-90J01	**CM55321-90J01A**	477
55321-90J01	**TEN01212**	478
55321-93900	**CM55321-93900**	501
55321-93900	**TEN01206**	478
55321-93J00	**REC09116-06094**	479
55321-94502	**TEN01209**	479
55321-94900	**REC09116-06121**	479
55321-95500	**TEN01207**	478
56120-90L00-0EP	**REC56120-93900**	521
56120-90L01-0EP	**REC56120-93900**	521
56120-90L02-0EP	**REC56120-93900**	521
56120-93900-002M	**REC56120-93900**	521
56120-93900-0EP	**REC56120-93900**	521
56120-93901-0ED	**REC56120-93900**	521
56120-93901-0EP	**REC56120-93900**	501
56120-93901-0EP	**REC56120-93900**	531
56120-94321-0EP	**REC56120-94321-0EP**	509-511-521
56120-96332-0EP	**REC56120-96332-0EP**	505-507-521
56130-94411-0EP	**REC56130-94413-0EP**	472
56130-94413-0EP	**REC56130-94413-0EP**	472
56130-96320-0EP	**REC56130-96331-0EP**	472
56130-96331-0EP	**REC56130-96331-0EP**	472
57100-93902	**REC57100-93902**	501
57100-93902	**REC57100-93902**	531
57110-92L10	**REC57110-94411**	531
57110-93912	**REC57110-93912**	531
57110-94441	**REC57110-94441**	531
57292-94300	**PAGB/T896-6**	466
57310-93850	**REC57521-93902**	526
57310-94401	**REC57521-94400**	526
57311-90L00	**REC57311-93910**	525
57311-91J00	**REC57311-98600**	497
57311-91L00	**REC57311-96311**	525
57311-91L00	**REC57311-96311**	531
57311-93901	**REC57311-93901**	525
57311-93901	**REC57311-93901**	531
57311-93910	**REC57311-93910**	531
57311-93910	**REC57311-93910**	501-525
57311-94401	**REC57311-94402**	525
57311-94402	**REC57311-94402**	525
57311-94402	**REC57311-94402**	531
57311-96310	**REC57311-96311**	525
57311-96311	**REC57311-96311**	525
57311-96320	**REC57311-96311**	525
57311-96320	**REC57311-96320**	505-507-531
57311-97J10	**REC57311-99J10**	503
57311-98400	**REC57311-98400**	531
57311-98600	**REC57311-98600**	525
57311-98601	**REC57311-98600**	525

R.O. / OEM	REF	
57311-99J10	**REC57311-99J10**	499-525
57510-89J00	**REC57510-89J00**	505-507-525
57510-90L00	**REC57510-93910**	525
57510-91J00	**REC57510-91J00**	497-525
57510-91L00	**REC57510-89J00**	525-531
57510-93902	**REC57510-93902**	525
57510-93902	**REC57510-93902**	531
57510-93910	**REC57510-93910**	501-525
57510-93910	**REC57510-93910**	531-532
57510-94400	**REC57510-94402**	525
57510-94401	**REC57510-94402**	525
57510-94402	**REC57510-94402**	525
57510-94402	**REC57510-94402**	531
57510-98600	**REC57510-91J00**	525
57510-98610	**REC57510-91J00**	525
57510-98611	**REC57510-91J00**	525
57510-99J10	**REC57510-99J11**	503
57521-89J00	**REC57521-89J00**	505-507-526-531
57521-90L00	**REC57521-93910**	526
57521-91J00	**REC57521-91J00**	497-526
57521-93902	**REC57521-93902**	526
57521-93902	**REC57521-93902**	531
57521-93910	**REC57521-93910**	501-526-531
57521-94400	**REC57521-94400**	526
57521-94400	**REC57521-94400**	531
57521-96311	**REC57521-96312**	526
57521-96312	**REC57521-96312**	526
57521-96312	**REC57521-96312**	531
57521-99J10	**REC57521-99J10**	503
57610-93901	**REC57610-93901**	501-531
57610-94402	**REC57610-94402**	509-511
57610-96311	**REC57610-96311**	505-507
57621-87J00	**REC57621-94403**	522
57621-87J01	**REC57621-94403**	522
57621-87J02	**REC57621-94403**	522
57621-87J03	**REC57621-94403**	509-511-522
57621-91L10	**REC57621-91L10**	522
57621-94400	**REC57621-94403**	522
57621-94403	**REC57621-94403**	522-531
57621-96300	**REC57621-91L10**	522
57621-96310	**REC57621-91L10**	522
57630-92E00	**REC57630-92E00**	517-518-531
57630-94300	**REC57630-94300**	511-531
57630-94301	**REC57630-94300**	509-531
57630-94500	**REC57630-94500**	512-531
57630-96300	**REC57630-96300**	505-507-531
57631-93901	**REC57631-93901**	499-501-503-523
57631-94700	**REC57631-95303**	523
57631-95301	**REC57631-95303**	523
57631-95302	**REC57631-95303**	523
57631-95303	**REC57631-95303**	509-511-523
57631-96301	**REC57631-96301**	507-523
57632-93902	**REC57632-94J00**	501
57632-94J00	**REC57632-94J00**	499-503-532
57632-97L00	**REC57632-97L00**	503-522
57632-98500	**REC57632-97L00**	522
57632-98501	**REC57632-97L00**	497-522
57633-93900	**REC57633-93901**	532
57633-93901	**REC57633-93901**	499-501-503-532
57634-88L00	**REC57634-88L00**	509-511-522
58100-89L00-019	**SOL4111-093-07A**	528
58100-89L20-019	**SOL4111-093-09A**	528
58100-89L50-019	**SOL4111-093-12A**	528
58100-89L60-019	**SOL4111-093-10A**	528
58100-89L70-019	**SOL4111-093-11A**	528
58100-90J00-019	**SOL3411-139-17**	528
58100-90J00-019	**SOL3413-138-17**	528
58100-90J00-019	**SOL3451-139-17**	528
58100-90J10-019	**SOL3411-139-19**	528
58100-90J10-019	**SOL3413-138-19**	528
58100-90J10-019	**SOL3451-139-19**	528
58100-90J20-019	**SOL3411-139-21**	528
58100-90J20-019	**SOL3413-138-21**	528
58100-90J20-019	**SOL3451-139-21**	528
58100-90J22-019	**SOL3451-139-23**	528
58100-90J40-019	**SOL3413-138-15**	528
58100-90L41-019	**SOL4111-093-08A**	528
58100-94302-019	**SOL4311-121-09**	528
58100-94313-019	**SOL4311-116-13**	528
58100-94500-019	**SOL4411-135-15**	528
58100-94500-019	**SOL4413-130-15**	528
58100-94500-019	**SOL4431-135-15**	528
58100-94512-019	**SOL4411-133-17**	528
58100-94512-019	**SOL4413-128-17**	528
58100-94512-019	**SOL4431-133-17**	528

R.O. / OEM	REF	
58100-94522-019	**SOL4411-130-19**	528
58100-94522-019	**SOL4413-125-19**	528
58100-94522-019	**SOL4431-130-19**	528
58100-94532-019	**SOL4411-130-21**	528
58100-94532-019	**SOL4413-125-21**	528
58100-94532-019	**SOL4431-130-21**	528
58100-94554-019	**SOL4431-135-15**	528
58100-94561-019	**SOL4431-130-19**	528
58100-94571-019	**SOL4431-130-21**	528
58100-94581-019	**SOL4431-133-17**	528
58100-95212-019	**SOL4311-120-10**	528
58100-95222-019	**SOL4311-118-11**	528
58100-95353-019	**SOL4311-116-14**	528
58100-95363-019	**SOL4311-110-15**	528
58100-95393-019	**SOL4311-116-12**	528
58100-95511-019	**SOL2431-135-15**	528
58100-95521-019	**SOL2431-133-17**	528
58100-95530-019	**SOL2431-130-19**	528
58100-95D00-019	**SOL4211-100-14**	528
58100-96410-019	**SOL4211-110-09**	528
58100-96420-019	**SOL4211-105-11**	528
58100-96430-019	**SOL4211-103-12**	528
58100-96440-019	**SOL4211-101-13**	528
58100-96460-019	**SOL4211-100-15**	528
58110-91JN0-019	**SOL4011-079-07S**	497-528
58200-87D01-019	**SOL4513-145-17**	529
58200-87D01-019	**SOL4551-148-18**	529
58200-87D02-019	**SOL4552-148-18**	529
58200-87D11-019	**SOL4513-143-19**	529
58200-87D11-019	**SOL4551-148-20**	529
58200-87D12-019	**SOL4552-148-20**	529
58200-87D21-019	**SOL4513-140-21**	529
58200-87D21-019	**SOL4551-143-22**	529
58200-87D22-019	**SOL4552-143-22**	529
58200-87D61-019	**SOL4511-150-15**	529
58200-87D61-019	**SOL4513-148-15**	529
58200-87D61-019	**SOL4551-148-16**	529
58200-87D62-019	**SOL4552-148-16**	529
59178-97J00	**REC59178-97J00**	439-440-499-503-521
63610-89E01-000	**REC63610-89E01**	467
63610-91J00	**REC63610-91J20**	467
63610-91J01	**REC63610-91J20**	467
63610-91J03	**REC63610-91J20**	467
63610-91J04	**REC63610-91J20**	467
63610-91J20	**REC63610-91J20**	467
63610-93501-000	**REC63610-93501**	467
63610-94402-000	**REC63610-94402**	467
63610-96302-000	**REC63610-96302**	467
63610-96321-000	**REC63610-96321-000**	467
65720-94403	**GS31039**	444
65720-94411	**GS31038**	444
65720-98500	**REC65720-98520**	443
65720-98501	**REC65720-98520**	443
65720-98502	**REC65720-98520**	443
65720-98520	**REC65720-98520**	443
65720-98521	**REC65720-98520**	443
65720-985L1	**REC65720-98520**	443
65720-986A0	**REC65720-986L0**	443
65720-986B0	**REC65720-986L0**	443
65720-986L0	**REC65720-986L0**	443
65740-95D00	**GS31070**	444
65740-99100	**GS31037**	444
65750-89J11	**GS31089**	444
65750-94401	**REC65750-94404**	443
65750-94402	**REC65750-94404**	443
65750-94403	**REC65750-94404**	443
65750-94404	**REC65750-94404**	443
65750-95500	**GS31071**	444
65750-95500	**GS31072**	444
65750-98505	**GS31035**	444
65750-98505	**GS31036**	444
65770-93J12	**GS31095**	442
65770-95504	**GS31090**	442
65900-98J00	**REC90794-46866**	446
65910-98J00	**REC90794-46868**	446
67200-88L00	**REC67200-88L00**	465
67200-88L10	**REC67200-88L10**	465
67200-91J00	**REC67200-94J20**	464
67200-91J01	**REC67200-94J20**	464
67200-91J04	**REC67200-94J20**	464
67200-93J00	**REC67200-93J51**	464
67200-93J01	**REC67200-93J51**	464
67200-93J02	**REC67200-93J51**	464
67200-93J03	**REC67200-93J51**	464
67200-93J04	**REC67200-93J51**	464

R.O. / OEM	REF	
67200-93J06	**REC67200-93J51**	464
67200-93J12	**REC67200-88L00**	465
67200-93J13	**REC67200-88L00**	465
67200-93J15	**REC67200-88L10**	465
67200-93J50	**REC67200-93J51**	464
67200-93J51	**REC67200-93J51**	464
67200-94J20	**REC67200-94J20**	464
67200-99E10-0EP	**REC67200-99E56**	464
67200-99E30-0EP	**REC67200-99E56**	464
67200-99E50	**REC67200-99E56**	464
67200-99E51	**REC67200-99E56**	464
67200-99E56	**REC67200-99E56**	464
67256-95600	**PAF15-13010010W**	466
67275-95600	**PAF25-07000007W**	466
90171-18M04	**REC90171-18M04**	518
92800-94610	**REC32800-94620**	458
94701-00282	**NGKCR6HS**	181
94701-00282-00	**NGKCR6HS**	108
94701-00300-00	**NGKCR5HSB**	108
94701-00309-00	**NGKBR9HS-10**	108
94701-00375	**NGKDPR6EA-9**	65-66-67-68-197-207
94701-00375	**NGKDPR7EA-9**	185-191
94701-00375-00	**NGKDPR6EA-9**	108
94701-00406-00	**NGKDPR5EA-9**	69-108
94702-00247-00	**NGKBR8HS-10**	108
94702-00271	**NGKBR8HS-10**	247-456
94702-00309	**NGKBR9HS-10**	245
94702-00372	**NGKCR6HSB**	64-173-179
94702-00372-00	**NGKCR6HS**	108
94702-00391	**NGKLFR5A-11**	69-70-71-72-209-211
94702-00391-00	**NGKLFR5A-11**	108
94702-00400	**NGKLFR6A-11**	70-72-73-213-214
94702-00400-00	**NGKLFR6A-11**	108
94702-00409	**NGKCR9EB**	108
94702-00418	**NGKDPR6EB-9**	65-66-67-68-69-187-195-201-203
94702-00418-00	**NGKDPR6EB-9**	108
990A0-01E81-01Q	**REC80W90U3**	450
990A0-01E81-05Q	**REC80W90U6**	450
990C0-01E30-GLN	**REC10W40U3**	450
990C0-01E30-GLN	**REC10W40U6**	450
990C0-10W40-1GL	**REC10W40U3**	450
990C0-10W40-1GL	**REC10W40U6**	450
990C0-10W40-GAL	**REC10W40U3**	450
990C0-10W40-GAL	**REC10W40U6**	450
990C0-10W40-GLN	**REC10W40U3**	450
990C0-10W40-GLN	**REC10W40U6**	450
99105-00100-16P	**SOL4431-135-15**	528
99105-00100-18P	**SOL4431-133-17**	528
99105-00100-20P	**SOL4431-130-19**	528
99105-00100-22P	**SOL4431-130-21**	528
99105-00200-16P	**SOL4511-150-15**	529
99105-00200-16P	**SOL4551-148-16**	529
99105-00200-18P	**SOL4511-148-17**	529
99105-00200-18P	**SOL4511-155-17**	529
99105-00200-18P	**SOL4551-148-18**	529
99105-00200-20P	**SOL4511-145-19**	529
99105-00200-20P	**SOL4511-153-19**	529
99105-00200-20P	**SOL4551-148-20**	529
99105-00200-22P	**SOL4511-143-21**	529
99105-00200-22P	**SOL4511-153-21**	529
99105-00200-22P	**SOL4551-143-22**	529
99105-00200-24P	**SOL4511-142-23**	529
99105-00200-24P	**SOL4551-140-24**	529
99105-0020L-16P	**SOL4512-150-15**	529
99105-0020L-16P	**SOL4552-148-16**	529
99105-0020L-18P	**SOL4512-148-17**	529
99105-0020L-18P	**SOL4552-148-18**	529
99105-0020L-20P	**SOL4512-145-19**	529
99105-0020L-20P	**SOL4552-148-20**	529
99105-0020L-22P	**SOL4512-143-21**	529
99105-0020L-22P	**SOL4552-143-22**	529
99105-0020L-24P	**SOL4512-142-23**	529
99105-0020L-24P	**SOL4552-140-24**	529
99105-00700-18P	**SOL3451-139-17**	528
99105-00700-20P	**SOL3451-139-19**	528
99105-00700-22P	**SOL3451-139-21**	528
99105-00700-24P	**SOL3451-139-23**	528
99105-0070L-18P	**SOL3452-139-17**	528
99105-0070L-20P	**SOL3452-139-19**	528
99105-0070L-22P	**SOL3452-139-21**	528
99105-11002-008	**PRE3300C08**	467
99105-11002-009	**PRE3300C09**	467

R.O. / OEM	REF	
99105-11002-010	**PRE3300C10**	467
99105-11002-011	**PRE3300C11**	467
99105-11002-012	**PRE3300C12**	467
99105-11002-013	**PRE3300C13**	467
99105-11002-014	**PRE3300C14**	467
99105-11002-015	**PRE3300C15**	467
99105-11002-016	**PRE3300C16**	467
99105-11002-017	**PRE3300C17**	467
99105-11002-018	**PRE3300C18**	467
99105-11002-019	**PRE3300C19**	467
99105-11002-020	**PRE3300C20**	467
99105-11002-021	**PRE3300C21**	467
99105-11002-022	**PRE3300C22**	467
99105-11002-023	**PRE3300C23**	467
99105-11002-024	**PRE3300C24**	467
99105-11002-025	**PRE3300C25**	467
99105-11002-026	**PRE3300C26**	467
99105-11002-027	**PRE3300C27**	467
99105-11002-028	**PRE3300C28**	467
99105-11002-029	**PRE3300C29**	467
99105-11002-030	**PRE3300C30**	467
99105-20003	**RACRK22628**	447
99105-20005	**LENS3227**	446
99105-20005	**RACS3227**	446
99105-20005-ASY	**RAC490R-RAC-01**	446

HONDA

ES

GUÍA MANTENIMIENTO COLAS Y Y KITS 545
SISTEMA DE ALIMENTACIÓN Y FILTRACIÓN 547
ACEITE 553
BOMBA DE COMBUSTIBLE EN LÍNEA 547
ABRAZADERA PARA MANGUERA 548
ADAPTADOR LÍNEA DE COMBUSTIBLE 548
BOMBA DE COMBUSTIBLE 547
LÍNEA DE COMBUSTIBLE 547
MANGUERA DE COMBUSTIBLE 547
MUELLE TUBO COMBUSTIBLE 548
BOMBA DE COMBUSTIBLE ELÉCTRICA 555
CARBURADOR 555
AGUJA DE CARBURADOR 555
GUÍA CARBURADORES 556
KITS CARBURADORES 556
COMPONENTES TANQUE Y CONECTORES 548
CONECTOR DE DEPÓSITO 548
PASAMAMPAROS 549
FILTRO DE ACEITE 554
GUÍA FILTROS DE ACEITE 554
FILTRO DE COMBUSTIBLE Y ELEMENTOS 549
BRACKET 549
FILTRO COMBUSTIBLE MONTAJE EN LÍNEA 552
FILTRO COMBUSTIBLE SEPARADOR AGUA 549
FILTRO DECANTADOR DE COMBUSTIBLE COMPLETO CON VASO TRASPARENTE 550
FILTRO DECANTADOR DE GASOLINA 550
LLAVES PARA FILTRO 552
RACOR DE LATÓN 552
INYECTORES 555
SISTEMA ELÉCTRICO 557
ALTERNADORES 561
CORREAS DE ALTERNADOR 562
BOBINAS 559
BUJÍAS 559
DESCONECTORES DE SEGURIDAD 561
LLAVES DE ARRANQUE 564
MOTORES DE ARRANQUE 560
SENSORES 557
SENSOR DETONACIÓN 558
SENSOR MAP 557
SENSOR MAT, TEMPERATURA DEL AIRE 558
SENSOR POSICIÓN CIGÜEÑAL 557
SENSOR POSICIÓN LEVAS 557
SENSOR PRESIÓN DE ACEITE 558
SENSOR OXÍGENO 558
TRIM, TILT & POWER TRIM 562
EXTRACTOR TAPONES DE TRIM 563
INSTALACIÓN ELÉCTRICA 562
POWER TRIM COMPLETO 563
TRIM COMPLETO 562
SISTEMA DE GOBIERNO 564
CABLES DE CONTROL 565
LLAVES DE ARANQUE 565
MANDOS DE CONTROL 564
SISTEMA DE REFRIGERACIÓN 566
ÁNODOS 571
ÁNODO CANADA METAL 571
ÁNODO TECNOSEAL 573
BOMBA DE AGUA 569
JUNTAS BOMBA 569
KITS DE REPARACIÓN BOMBA DE AGUA 570
RETÉN CUERPO DE BOMBA 570
IMPULSORES 567
CHAVETA 569
GUÍA IMPULSORES 568
TERMOSTATO 566
PARTES DEL MOTOR 574
GUÍA CORREAS DE DISTRIBUCIÓN 575
JUNTAS DE MOTOR 574
JUNTAS BASE DE MOTOR 574
JUNTAS BOMBA DE ACEITE 574
JUNTAS CULATA 574
JUNTAS SILENCIOSO 574
JUNTAS TAPÓN DRENAJE 575
KIT JUNTAS DE CULATA 575
SISTEMA DE ESCAPE Y ADMISIÓN 576
SISTEMA DE ADMISIÓN 576
JUNTAS 576
RETÉN DE VÁLVULA 576
SISTEMA DE ESCAPE 576
RETÉN DE VÁLVULA 576
UNIDADES DE TRANSMISIÓN 577
DESPIECE COLAS 577
BF75AT • BF90AT 577
COMPONENTES DE COLA 578
ARANDELA DE CIERRE 579
EJE HÉLICE 579
JUNTA EJE SELECTOR 578
KITS JUNTAS Y RETENES 578
RETENES EJE DE CAMBIO 578
RETENES EJE DE HELICE 578
RETENES EJE DE TRANSMISIÓN 578
RODAMIENTO DIÁBOLO 579
RODAMIENTO PIÑÓN AVANTE 579
TUERCA DE DIÁBOLO 579
SISTEMA DE PROPULSIÓN 580
HÉLICES ALUMINIO E INOXIDABLE DE 3 Y 4 PALAS 580
GUÍA HÉLICES CON NÚCLEO INTEGRADO 581
HÉLICES PARA NÚCLEO INTERCAMBIABLE 582
NÚCLEO INTERCAMBIABLE 582
REF --> RO 583
RO --> REF 585

EN

DRIVES MAINTENANCE GUIDE & KITS 545
FUEL & FILTRATION SYSTEM 547
CARBURETOR 555
CARBURETOR KITS 556
CARBURETOR NEEDLE VALVE 555
GUIDE CARBURETORS 556
ELECTRIC FUEL PUMP 555
FUEL FILTERS AND ELEMENTS 549
BRACKET 549
COMPLETE FUEL FILTER 550
COMPLETE FUEL FILTER WITH TRANSPARENT BOWL 550
FILTER KEY 552
IN-LINE FUEL FILTER 552
RACORS 552
WATER SEPARATING FUEL FILTER 549
FUEL PUMP IN LINE 547
CLAMP SMALL 548
COUPLER 548
FUEL HOSE 547
FUEL LINE ASSEMBLY 547
SPRING, FUEL PIPE 548
FUEL TANK COMPONENTS & CONNECTORS 548
TANK CONNECTOR 548
THRU HULL 549
INJEKTOR 555
OIL 553
OIL FILTER 554
OIL FILTER GUIDE 554
ELECTRIC SYSTEM 557
ALTERNATOR 561
ALTERNATOR BELT 562
COILS 559
CUT OFF SWITCHES 561
SENSORS 557
SENSOR, CAMSHAFT 557
SENSOR, CRANKSHAFT 557
SENSOR, KNOCK 558
SENSOR, MAP 557
SENSOR MAT, AIR TEMPERATURE 558
SENSOR, O2 558
SENSOR, PRESSURE OIL 558
SPARK 559
STARTERS 560
TRIM, TILT & POWER TRIM 562
COMPLETE POWER TRIM ASSEMBLY 563
COMPLETE TRIM ASSEMBLY 562
TRIM PLUGS EXTRACTOR 563
WIRING HARNESS 561
STEERING SYSTEM 564
ENGINE CONTROLS 564
CONSOLE CONTROL 564
CONTROL CABLES 565
SIDE CONTROL 564
IGNITION STARTER SWITCH 565
COOLING SYSTEM 566
ANODES 571
ANODES CANADA METAL 571
ANODES TECNOSEAL 573
IMPELLERS 567
IMPELLERS GUIDE 568
KEY 569
THERMOSTAT 566
WATER PUMP 569
SEAL WATER PUMP 570
SERVICE KIT 570
WATER PUMP GASKET 569
ENGINE PARTS 574
ENGINE GASKETS 574
GASKET, CYLINDER 574
GASKET, CYLINDER HEAD 574
GASKET KIT 575
GASKET, MUFFLER 574
GASKET, OIL PUMP 574
O-RING, DRAIN CAP 575
TIMIMG BELT 574
EXHAUST & INTAKE SYSTEM 576
EXHAUST SYSTEM 576
VALVE SEALS 576
INTAKE SYSTEM 576
GASKETS & VALVE SEALS 576
UNIT DRIVES & COMPONENTS 577
DRIVE COMPONENTS 577
CARRIER BEARING 579
FORWARD GEAR BEARING 579
NUT, GEARCASE END 579
O-RING DRIVE SHAFT 578
PROPELLER SHAFT 579
SEAL DRIVE SHAFT 578
SEAL KITS 578
SEAL PROPELLLER SHAFT 578
TAB WASHER 579
PROPULSION SYSTEM 580
3 & 4 BLADE ALUMINIUM & SS PROPELLERS 580
INTERCHANGEABLE HUB 582
PROPELLERS APPLICATION WITH RUBBER HUB 581
PROPELLERS FOR INTERCHANGEABLE HUB 582
REF --> OEM 583
OEM --> REF 585

IT

GUIDA MANUTENZIONE E KIT 545

SISTEMA DI ALIMENTAZIONE E FILTRAZIONE 547

CARBURATORE 555
- KIT CARBURATORI 556
- SPILLO CONICO CARBURATORE 555

COMPONENTI SERBATOIO E CONETTORI 548
- ATTACCO SERBATOIO 548
- PASSASCAFO 549

FILTRI BENZINA E RACCORDI 549
- CHIAVE DA FILTRO 552
- FILTRO BENZINA ALTA PRESSIONE
- FILTRO BENZINA PER MONTARE IN LÍNEA 552
- FILTRO DECANTATORE BENZINA 550
- FILTRO DI DECANTAZIONE BENZINA COMPLETO CON VASCHETTA TRASPARENTE 550
- FILTRO SEPARATORE ACQUA-BENZINA 549
- RACCORDI 552
- SUPPORTO 549

FILTRO OLIO 554
- GUIDA FILTRO OLIO 554

INIETTORE 555
OLIO 553
POMPA BENZINA ELETTRICA 555
POMPA BENZINA IN LINIA 547
- ADATTATORE 548
- FASCETTE 548
- MOLLA TUBO COMBUSTIBILE 548
- TUBO BENZINA 547
- TUBO CARBURANTE 547

SISTEMA ELETTRICO 557

ALTERNATORE 561
- CURROIA ALTERNATORE 562

BOBINE 559
CANDELE 559
CHIAVETTA DI SICUREZZA 561
- INTERRUTTORE DI STOP 561
- KIT 561

MOTORINI AVVIAMENTO 560
SENSORE 557
- SENSORE ALBERO A CAME 557
- SENSORE ALBERO MOTORE 557
- SENSORE ANTIDETONAZIONE 558
- SENSORE MAP 557
- SENSORE MAT, TEMPERATURA ARIA 558
- SENSORE OSSIGENO 558
- SENSORE PRESSIONE DELL'OLIO 558

TRIM, TILT & POWER TRIM 562
- ESTRATTORE PER TAPPI DI TRIM 563
- INSTALLAZIONE ELETTRICA 562
- MOTORINO POWER TRIM COMPLETO 563
- MOTORINO TRIM COMPLETO 562

SISTEMA DI GUIDA 564

CAVI COMANDI 565
COMANDI DI CONTROLLO 564
CHIAVI DI ACCENSIONE 565

SISTEMA DI RAFFREDDAMENTO 566

ANODI 571
- ANODI CANADA METAL 571
- ANODI TECNOSEAL 573

GIRANTE 567
- CIAVETTA 569
- GUIDA GIRANTE 568

POMPA ACQUA 569
- GUARNIZIONE POMPA 569
- KIT RICAMBI POMPA ACQUA 570
- TENUTE CORPO POMPA 570

TERMOSTATO 566

PARTI MOTORE 574

GUARNIZIONI MOTORE 574
- GUARNIZIONE BASE MOTORE 574
- GUARNIZIONE TAPPO DRENAGIO 575
- GUARNIZIONE OLIO 574
- GUARNIZIONE SILENZIATORE 574
- GUARNIZIONE TESTATA 574
- KIT GUARNIZIONE TESTATA 575

GUIDA CINGHIE DISTRIBUZIONE 575

SISTEMA DI SCARICO E ASPIRAZIONE 576

SISTEMA ASPIRAZIONE 576
- GUARNIZIONE 576
- TENUTE 576

SISTEMA SCARICO 576
- TENUTE 576

UNITÀ DI TRASMISSIONE 577

COMPONENTI PIEDI 578
- ASSE ELICA 579
- CUSCINETTO DIAVOLO 579
- CUSCINETTO PIGNONE AVANTI 579
- DADO DIAVOLO 579
- KIT GUARNIZIONE E TENUTE 578
- TENUTE ASSE DI CAMBIO 578
- TENUTE ASSE DI ELICA 578
- TENUTE ASSE DI TRASMISSIONE 578
- RONDELLA CHIUSURA 579

PARTI PIEDI 577
- BF75AT • BF90AT 577

SISTEMA DI PROPULSIONE 580

HELICHE ALLUMINIO E INOX DA 2 E 4 PALE 580
- ELICHE PER MOZZO INTERCAMBIABILE 582
- GUIDA ELICHE CON MOZZO 581
- MOZZO INTERCAMBIABILE 582

REF --> RO 583
RO --> REF 585

FR

GUIDE KITS DE MAINTENANCE 545

SYSTÈME D'ALIMENTATION ET DE FILTRATION 547

CARBURATEUR 555
- GUIDE DES CARBURATEURS 556
- KIT CARBURATEUR 556
- POINTEAU CARBURATEUR 555

COMPOSANTS ET CONNECTEURS DU RÉSERVOIR 548
- PASSE-CLOISON 549
- RACCORDS DE RESERVOIR 548

FILTRE À ESSENCE ET CARTOUCHE DE RECHANGE 549
- CLÉ À FILTRE 552
- FILTRE À ESSENCE EN LIGNE 552
- FILTRE DÉCANTEUR ESSENCE 550
- FILTRE DÉCANTEUR ESSENCE AVEC BOL TRANSPARENT 550
- FILTRE SÉPARATEUR EAU-ESSENCE 549
- RACCORDS 552
- TÊTE DE FILTRE À ESSENCE 549

FILTRE À HUILE 554
- GUIDE DES FILTRES À HUILE 554

HUILES 553
INJECTEURS 555
POIRE À CARBURANT 547
- COLLIER 548
- RACCORD COUPLEUR 548
- RESSORT, TUYAU DE CARBURANT 548
- TUYAU CARBURANT 547

POMPE À ESSENCE ÉLECTRIQUE 555

SYSTÈME ÉLECTRIQUE 557

ALTERNATEUR 561
- COURROIE D'ALTERNATEUR 562

BOBINES 559
BOUGIES 559
CAPTEURS 557
- CAPTEUR À OXYGENE 558
- CAPTEUR DE CLIQUETIS 558
- CAPTEUR DE POSITION D'ARBRE À CAMES 557
- CAPTEUR DE POSITION DU VILEBREQUIN 557
- CAPTEUR MAP 557
- CAPTEUR MAT DE TEMPERATURE D'AIR 558
- CAPTEUR PRESSION D'HUILE 558

COUPE CIRCUIT DE SECURITE 561
- KITS 561

DEMARREUR 560
TRIM, TILT & POWER TRIM 562
- INSTALLATION ELECTRIQUE 562
- KIT EXTRACTEUR 563
- MOTEUR DE TRIM 562
- POWER TRIM COMPLET 563

SYSTÈME DE COMMANDE 564

BOITIER DE COMMANDE 564
CÂBLES DE COMMANDE 565
CONTACTEUR À CLÉ 565

SYSTÈME DE REFROIDISSEMENT 566

ANODES 571
- ANODE CANADA METAL 571
- ANODE TECNOSEAL 573

TURBINES 567
- CLAVETTE 569
- GUIDE DE TURBINES 568

POMPE D'EAU 569
- JOINTS SPI DE POMPE À EAU 570
- JOINTS POMPE 569
- KIT REPARATION DE POMPE À EAU 570

THERMOSTAT 566

PIÈCES MOTEUR 574

COURROIES DE DISTRIBUTION 575
JOINTS DE MOTEUR 574
- JOINTS DE CULASSE 574
- JOINTS DE TÊTE MOTRICE 574
- JOINTS DE POMPE À HUILE 574
- JOINTS DE SILENCIEU 574
- JOINTS DE VIDANGE 575
- KIT JOINTS DE MOTEUR 575

SYSTÈME D'ECHAPPEMENT ET SYSTÈME D'ADMISSION 576

SYSTÈME D'ADMISSION 576
- JOINTS DE SOUPAPE 576

SYSTÈME D'ECHAPPEMENT 576
- JOINTS DE SOUPAPE 576

EMBASES ET PIÈCES 577

EMBASES 577
- BF75AT • BF90AT 577

PIÈCES 578
- ARBRE D'HELICE 579
- ÉCROU DE DIABOLO 579
- JOINTS D'ARBRE DE SELECTEUR 578
- JOINTS SPI ARBRE DE CHANGEMENT 578
- JOINTS SPI ARBRE DE TRASMISSION 578
- KITS JOINTS D'EMBASES 578
- RONDELLE FREIN 579
- ROULEMENT DE DIABOLO 579
- ROULEMENT DE PIGNON AVANT 579

SYSTEME DE PROPULSION 580

HÉLICE ALUMINIUM ET INOX 3 ET 4 PALES 580
- GUIDE DES HÉLICES ET MOYEUX 581
- HELICES AVEC MOYEU INTERCHANGEABLE 582
- MOYEU INTERCHANGEABLE 582

REF --> RO 583
RO --> REF 585



GUÍA KITS MANTENIMIENTO — MAINTENANCE GUIDE & KITS — GUIDA MANUTENZIONE E KIT — GUIDE KITS MAINTENANCE

	KIT	REF					
BF4 BF4.5 BF5	REC06211-ZV1-505 	REC06192-ZV1-C00	KIT TURBINA	IMPELLER KIT	KIT GIRANTE	KIT TURBINE	1
		NGKBPR5ES	BUJÍA	SPARK PLUG	CANDELE	BOUGIE	1
		REC19300-881-761	TERMOSTATO	THERMOSTAT	TERMOSTATO	TERMOSTAT	1
		REC16910-GB2-005	FILTRO COMBUSTIBLE	FUEL FILTER	FILTRO COMBUSTIBILE	FILTRE À ESSENCE	1
		TEN01402	ÁNODO	ANODE	ANODO	ANODE	1
		PAGB/T91-2.5X30	PIN	PIN	PIN	GOUPILLE	1
BF8 BF9.9D BF10	REC06211-ZW9-505 	REC19210-ZW9-013	TURBINA	IMPELLER	GIRANTE	TURBINE	1
		NGKCR5EH-9	BUJÍA	SPARK PLUG	CANDELE	BOUGIE	2
		PAF15-07000031	TERMOSTATO	THERMOSTAT	TERMOSTATO	TERMOSTAT	1
		REC16910-ZV4-015	FILTRO COMBUSTIBLE	FUEL FILTER	FILTRO COMBUSTIBILE	FILTRE À ESSENCE	1
		REC35-822626Q03	FILTRO DE ACEITE	OIL FILTER	FILTRO OLIO	FILTRE A HUILE	1
		CM41106-ZW9-09000	ÁNODO	ANODE	ANODO	ANODE	2
		PAGB/T91-2.5X30	PIN	PIN	PIN	GOUPILLE	1
BF9.9A BF15A	REC06211-ZV4-505 	REC06192-ZV4-000	KIT TURBINA	IMPELLER KIT	KIT GIRANTE	KIT TURBINE	1
		REC19300-881-761	TERMOSTATO	THERMOSTAT	TERMOSTATO	TERMOSTAT	1
		NGKDR6HS	BUJÍA	SPARK PLUG	CANDELE	BOUGIE	2
		REC16910-ZV4-015	FILTRO COMBUSTIBLE	FUEL FILTER	FILTRO COMBUSTIBILE	FILTRE À ESSENCE	1
		TEN01402	ANODO	ANODE	ANODO	ANODE	1
		PAGB/T91-2.5X30	PIN	PIN	PIN	GOUPILLE	1
BF15D BF20D	REC06211-ZY0-505 	REC06192-ZW9-A30	KIT TURBINA	IMPELLER KIT	KIT GIRANTE	KIT TURBINE	1
		PAGB/T91-2.5X30	PIN	PIN	PIN	GOUPILLE	1
		PAF15-07000031	TERMOSTATO	THERMOSTAT	TERMOSTATO	TERMOSTAT	1
		REC35-822626Q03	FILTRO DE ACEITE	OIL FILTER	FILTRO OLIO	FILTRE A HUILE	1
		NGKCR5EH-9	BUJÍA	SPARK PLUG	CANDELE	BOUGIE	2
		CM41106-ZW9-09000	ANODO	ANODE	ANODO	ANODE	2
		REC16910-ZV4-015	FILTRO COMBUSTIBLE	FUEL FILTER	FILTRO COMBUSTIBILE	FILTRE À ESSENCE	1
BF25D BF30D	REC06211-ZV7-505 	REC16910-ZV4-015	FILTRO COMBUSTIBLE	FUEL FILTER	FILTRO COMBUSTIBILE	FILTRE À ESSENCE	1
		REC35-822626Q03	FILTRO DE ACEITE	OIL FILTER	FILTRO OLIO	FILTRE A HUILE	1
		PAGB/T91-2.5X30	PIN	PIN	PIN	GOUPILLE	1
		PAF15-07000031	TERMOSTATO	THERMOSTAT	TERMOSTATO	TERMOSTAT	1
		REC06192-ZV7-000	KIT TURBINA	IMPELLER KIT	KIT GIRANTE	KIT TURBINE	1
		TEN01408/1	ANODO	ANODE	ANODO	ANODE	1
		CM41107-ZV500A	ANODO	ANODE	ANODO	ANODE	1
		REC12-191833	JUNTA DRENAJE COLA	DRAIN PLUG GASKET	GUARNIZIONE DRENAGGIO	JOINT DE VIDANGE D'EMBASE	2
		PAF15-04000003	JUNTA DRENAJE COLA	DRAIN PLUG GASKET	GUARNIZIONE DRENAGGIO	JOINT DE VIDANGE D'EMBASE	1
		NGKDR7EA	BUJÍA	SPARK PLUG	CANDELE	BOUGIE	3
BF35A BF40A BF45A BF50A	REC06211-ZV5-505 	REC06192-ZV5-003	KIT TURBINA	IMPELLER KIT	KIT GIRANTE	KIT TURBINE	1
		PAGB/T91-2.5X30	PIN	PIN	PIN	GOUPILLE	1
		NGKDR7EA	BUJÍA	SPARK PLUG	CANDELE	BOUGIE	3
		REC35-822626Q03	FILTRO DE ACEITE	OIL FILTER	FILTRO OLIO	FILTRE A HUILE	1
		PAF15-07000031	TERMOSTATO	THERMOSTAT	TERMOSTATO	TERMOSTAT	1
		CMHBF4050KITA	KIT ANODO	ANODE KIT	KIT ANODO	KIT ANODE	1
		REC12-191833	JUNTA DRENAJE COLA	DRAIN PLUG GASKET	GUARNIZIONE DRENAGGIO	JOINT DE VIDANGE D'EMBASE	2
		PAF15-04000003	JUNTA DRENAJE COLA	DRAIN PLUG GASKET	GUARNIZIONE DRENAGGIO	JOINT DE VIDANGE D'EMBASE	1
		REC16900-SA5-004	FILTRO COMBUSTIBLE	FUEL FILTER	FILTRO COMBUSTIBILE	FILTRE À ESSENCE	1

	KIT	REF					
BF40D BF50D	REC06211-ZZ5-505	REC06192-ZV5-003	KIT TURBINA	IMPELLER KIT	KIT GIRANTE	KIT TURBINE	1
		PAGB/T91-2.5X30	PIN	PIN	PIN	GOUPILLE	1
		NGKDR7EB	BUJÍA	SPARK PLUG	CANDELE	BOUGIE	3
		REC35-822626Q03	FILTRO DE ACEITE	OIL FILTER	FILTRO OLIO	FILTRE A HUILE	1
		PAF15-07000031	TERMOSTATO	THERMOSTAT	TERMOSTATO	TERMOSTAT	1
		CMHBF4050KITA	KIT ANODO	ANODE KIT	KIT ANODO	KIT ANODE	1
		REC12-191833	JUNTA DRENAJE COLA	DRAIN PLUG GASKET	GUARNIZIONE DRENAGGIO	JOINT DE VIDANGE D'EMBASE	2
		PAF15-04000003	JUNTA DRENAJE COLA	DRAIN PLUG GASKET	GUARNIZIONE DRENAGGIO	JOINT DE VIDANGE D'EMBASE	1
		REC16911-ZZ5-003	FILTRO COMBUSTIBLE	FUEL FILTER	FILTRO COMBUSTIBILE	FILTRE À ESSENCE	1
BF60A	REC06211-ZZ3-506	REC19210-ZV5-003	TURBINA	IMPELLER	GIRANTE	TURBINE	1
		REC90752-ZV5-003	CHAVETA TURBINA	IMPELLER KEY	CHIAVE GIRANTE	CLAVETTE TURBINE	1
		NGKLMAR6C-9	BUJÍA	SPARK PLUG	CANDELE	BOUGIE	3
		PAGB/T91-2.5X30	PIN	PIN	PIN	GOUPILLE	1
		PAF15-07000031	TERMOSTATO	THERMOSTAT	TERMOSTATO	TERMOSTAT	1
		CMHBF35225KITA	KIT ANODO	ANODE KIT	KIT ANODO	KIT ANODE	1
		REC12-191833	JUNTA DRENAJE COLA	DRAIN PLUG GASKET	GUARNIZIONE DRENAGGIO	JOINT DE VIDANGE D'EMBASE	2
		PAF15-04000003	JUNTA DRENAJE COLA	DRAIN PLUG GASKET	GUARNIZIONE DRENAGGIO	JOINT DE VIDANGE D'EMBASE	1
		REC35-822626Q03	FILTRO DE ACEITE	OIL FILTER	FILTRO OLIO	FILTRE A HUILE	1
		REC16911-ZZ5-003	FILTRO COMBUSTIBLE	FUEL FILTER	FILTRO COMBUSTIBILE	FILTRE À ESSENCE	1
BF75A BF90A (1200002)	REC06211-ZW0-505	REC06192-ZV1-305	KIT TURBINA	IMPELLER KIT	KIT GIRANTE	KIT TURBINE	1
		REC19300-ZV5-043	TERMOSTATO	THERMOSTAT	TERMOSTATO	TERMOSTAT	1
		REC15400-RBA-F01	FILTRO DE ACEITE	OIL FILTER	FILTRO OLIO	FILTRE A HUILE	1
		NGKDR7EA	BUJÍA	SPARK PLUG	CANDELE	BOUGIE	4
		PAGB/T91-2.5X30	PIN	PIN	PIN	GOUPILLE	1
		REC12-191833	JUNTA DRENAJE COLA	DRAIN PLUG GASKET	GUARNIZIONE DRENAGGIO	JOINT DE VIDANGE D'EMBASE	2
		PAF15-04000003	JUNTA DRENAJE COLA	DRAIN PLUG GASKET	GUARNIZIONE DRENAGGIO	JOINT DE VIDANGE D'EMBASE	1
		CMHBF75115KITA	KIT ANODO	ANODE KIT	KIT ANODO	KIT ANODE	1
		REC16900-SA5-004	FILTRO COMBUSTIBLE	FUEL FILTER	FILTRO COMBUSTIBILE	FILTRE À ESSENCE	1
BF75D BF90D	REC06211-ZY9-505	REC06192-ZV1-000	KIT TURBINA	IMPELLER KIT	KIT GIRANTE	KIT TURBINE	1
		PAGB/T91-2.5X30	PIN	PIN	PIN	GOUPILLE	1
		NGKIZFR6K11	BUJÍA	SPARK PLUG	CANDELE	BOUGIE	4
		REC15400-RBA-F01	FILTRO DE ACEITE	OIL FILTER	FILTRO OLIO	FILTRE A HUILE	1
		CMHBF75115KITA	KIT ANODO	ANODE KIT	KIT ANODO	KIT ANODE	1
		REC19300-ZV5-043	TERMOSTATO	THERMOSTAT	TERMOSTATO	TERMOSTAT	1
		REC12-191833	JUNTA DRENAJE COLA	DRAIN PLUG GASKET	GUARNIZIONE DRENAGGIO	JOINT DE VIDANGE D'EMBASE	2
		PAF15-04000003	JUNTA DRENAJE COLA	DRAIN PLUG GASKET	GUARNIZIONE DRENAGGIO	JOINT DE VIDANGE D'EMBASE	1
		REC16900-SR3-004	FILTRO COMBUSTIBLE	FUEL FILTER	FILTRO COMBUSTIBILE	FILTRE À ESSENCE	1
		REC16911-ZY3-010	FILTRO COMBUSTIBLE	FUEL FILTER	FILTRO COMBUSTIBILE	FILTRE À ESSENCE	1
BF115A BF130A	REC06211-ZW5-505	REC06192-ZV1-000	KIT TURBINA	IMPELLER KIT	KIT GIRANTE	KIT TURBINE	1
		REC15400-RBA-F01	FILTRO DE ACEITE	OIL FILTER	FILTRO OLIO	FILTRE A HUILE	1
		NGKZFR7F	BUJÍA	SPARK PLUG	CANDELE	BOUGIE	4
		REC12-191833	JUNTA DRENAJE COLA	DRAIN PLUG GASKET	GUARNIZIONE DRENAGGIO	JOINT DE VIDANGE D'EMBASE	2
		PAF15-04000003	JUNTA DRENAJE COLA	DRAIN PLUG GASKET	GUARNIZIONE DRENAGGIO	JOINT DE VIDANGE D'EMBASE	1
		CMHBF75115KITA	KIT ANODO	ANODE KIT	KIT ANODO	KIT ANODE	1
		REC16911-ZY3-010	FILTRO COMBUSTIBLE	FUEL FILTER	FILTRO COMBUSTIBILE	FILTRE À ESSENCE	1
		REC16900-SR3-004	FILTRO COMBUSTIBLE	FUEL FILTER	FILTRO COMBUSTIBILE	FILTRE À ESSENCE	1
BF135A BF150A	REC06211-ZY5-505	REC06192-ZY6-000	KIT TURBINA	IMPELLER KIT	KIT GIRANTE	KIT TURBINE	1
		PAGB/T91-2.5X30	PIN	PIN	PIN	GOUPILLE	1
		REC15400-RBA-F01	FILTRO DE ACEITE	OIL FILTER	FILTRO OLIO	FILTRE A HUILE	1
		NGKIZFR6K11	BUJÍA	SPARK PLUG	CANDELE	BOUGIE	4
		REC12-191833	JUNTA DRENAJE COLA	DRAIN PLUG GASKET	GUARNIZIONE DRENAGGIO	JOINT DE VIDANGE D'EMBASE	2
		PAF15-04000003	JUNTA DRENAJE COLA	DRAIN PLUG GASKET	GUARNIZIONE DRENAGGIO	JOINT DE VIDANGE D'EMBASE	1
		CMHBF35225KITA	KIT ANODO	ANODE KIT	KIT ANODO	KIT ANODE	1
		REC16911-ZY3-010	FILTRO COMBUSTIBLE	FUEL FILTER	FILTRO COMBUSTIBILE	FILTRE À ESSENCE	1
BF175A BF200A BF225A	REC06211-ZY2-506	REC06192-ZY3-000	KIT TURBINA	IMPELLER KIT	KIT GIRANTE	KIT TURBINE	1
		REC15400-PLM-A01PE	FILTRO DE ACEITE	OIL FILTER	FILTRO OLIO	FILTRE A HUILE	1
		NGKIZFR6K11	BUJÍA	SPARK PLUG	CANDELE	BOUGIE	6
		PAF15-07000031	TERMOSTATO	THERMOSTAT	TERMOSTATO	TERMOSTAT	1
		PAGB/T91-2.5X30	PIN	PIN	PIN	GOUPILLE	1
		REC12-191833	JUNTA DRENAJE COLA	DRAIN PLUG GASKET	GUARNIZIONE DRENAGGIO	JOINT DE VIDANGE D'EMBASE	2
		PAF15-04000003	JUNTA DRENAJE COLA	DRAIN PLUG GASKET	GUARNIZIONE DRENAGGIO	JOINT DE VIDANGE D'EMBASE	1
		CMHBF35225KITA	KIT ANODO	ANODE KIT	KIT ANODO	KIT ANODE	1
		REC16911-ZY3-010	FILTRO COMBUSTIBLE	FUEL FILTER	FILTRO COMBUSTIBILE	FILTRE À ESSENCE	1

SISTEMA DE ALIMENTACIÓN Y FILTRACIÓN
FUEL & FILTRATION SYSTEM
SISTEMA DI ALIMENTAZIONE E FILTRAZIONE
SYSTÈME D'ALIMENTATION ET DE FILTRATION

BOMBA DE COMBUSTIBLE | FUEL PUMP | POMPA BENZINA | POIRE À CARBURANT

BOMBA DE COMBUSTIBLE

Fabricada con elastómeros termoplásticos inyectados, resistentes al alcohol y rayos UV.s

REF		
GS31187	1/4" = 6 mm	1
GS31090	5/16" = 8 mm	1
GS31095	3/8" = 9.5 mm	1
GS31090	5/16" = 8 mm	1

FUEL PUMP

Premium quality bulb resistence to alcohol as well as UV and ozone.

POMPA BENZINA

Fabbricata con elastomero termoplastico, resistente ai solventi e raggi UV.

POIRE À CARBURANT

Fabriqué avec des élastomères thermoplastiques injectés, résistant aux carburants et aux rayons UV.

GOLDENSHIP



LÍNEA DE COMBUSTIBLE

Universal. Manguera resistente al alcohol.

REF		
GS31096	5/16" x 2 m	1
GS31097	3/8" x 2 m	1
GS31099	8 mm x 2 m	1
SIE18-8013	5/16" x 2 m	1
SIE18-8015	3/8" x 2 m	1

FUEL LINE ASSEMBLY

Universal. Alcohol resistant hose.



TUBO CARBURANTE

Universale. Tubo resistente ai solventi.



TUYAU CARBURANT

Universel. Tuyau résistant à l'alcohol.



SIE18-8013
SIE18-8015

REF		
GS31189	3/8" x 2 m	1

MADE IN THE USA
GOLDENSHIP



REF		
GS31183	6 mm x 2 m	1

new

GOLDENSHIP

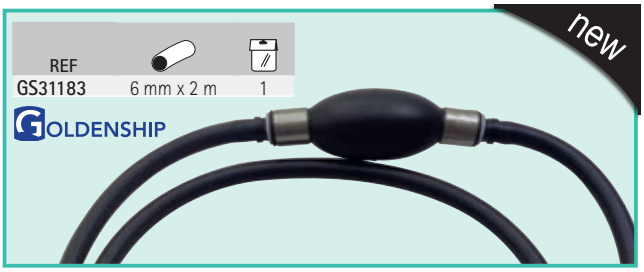

MANGUERA DE COMBUSTIBLE | FUEL HOSE | TUBO BENZINA | TUYAU CARBURANT

Manguera «Trident» para líneas de combustible. Con refuerzo termoplástico que le permite excelente flexibilidad y resistencia a los rayos UV. Color gris. Resistente al alcohol. Especialmente indicado para motores fueraborda.
Garantía: 3 años

Marine fuel hose (distribution and vent) for outboards. Fuel resistant thermo-plastic formulation with 2 spiral reinforcement provides excelent bendability and resistance to UV, aging and permeation by all marine fuels (gasoline/petrol and diesel) including alcohol blends.
Warranty: 3 years

Tubo «Trident» per línea combustibile. Con rinforzo termoplastico che gli permette un'eccellente flessibilità e resistenza ai raggi UV. Colore grigio. Resistente ai solventi. Indicato per i motori fuoribordo.
Garanzia: 3 anni

Tuyau «Trident» pour carburant. Avec renfort thermoplastique qui permet une excellente flexibilité et résistance aux rayons UV. Gris. Résistant à l'alcohol Convient particulièrement aux moteurs hors-bord.
Garantie: 3 ans

REF	Ø			
TRI305-0566	5/16" = 7,92 mm	15 m	1	SAEJ1527 ISO-8469 B1 CE
TRI305-0386	3/8" = 9,53 mm	15 m	1	



TRIDENT

MADE IN THE USA

CE CERTIFIED

De goma para diesel y gasolina sin plomo. Ideal para fueraborda. Refuerzos texiles internos. Muy flexible. Contenido aromático 50%

Rubber Hose suitable for loading mineral oils, diesel and unloaded fuel

In gomma per diesel e benzina senza piombo. Ideale per motori fuoribordo. Tessuto interno rinforzato. Molto flessibile.

Caoutchouc pour diesel et essence sans plomb. Idéal pour le hors-bord. Renforts textiles internes. Très flexible

CARBUPOMP/10NL

REF	Ø (mm)					
GS35031	6x12	10 bar	50 mm	-25°C ➡80° C	50 m	ISO R1307
GS35032	8x15	10 bar	65 mm		50 m	

ht hoses technology



MUELLE TUBO COMBUSTIBLE | SPRING, FUEL PIPE | MOLLA TUBO COMBUSTIBILE | RESSORT, TUYAU DE CARBURANT

new

REF
PAF4-04000030
PAF4-05000010



ABRAZADERA | CLAMP SMALL | FASCETTE | COLLIER

new

REF	
REC650-24351-51	6 mm
REC6E5-24351-51	8 mm



REF		
REC09401-11425	6-8 mm	1
REC09401-11425BULK	6-8 mm	25



ADPATADOR LÍNEA DE COMBUSTIBLE | COUPLER | ADATTATORE | RACCORD COUPLEUR

REF	
REC22-8M0001721	Ø 11 mm --> Ø 9 mm



COMPONENTES TANQUE Y CONECTORES | FUEL TANK COMPONENTS & CONNECTORS | COMPONENTI SERBATOIO E CONETTORI | COMPOSANTS ET CONNECTEURS DU RÉSERVOIR

CONECTOR DE DEPÓSITO | TANK CONNECTOR | ATTACCO SERBATOIO | RACCORDS DE RESERVOIR

Fabricado en latón. | Made in machined brass. | Fabbricato in ottone. | Coude MF 1/4" NPT en laiton.

GOLDENSHIP

REF		
GS31068	1/4" NPT	1



Para conectar dos motores a un sólo depósito, o viceversa. Fabricado en latón. | To connect two motors to a single tank, or vice versa. Made in machined brass | Per collegare due motori a un singolo serbatoio o viceversa. Fabbricato in ottone. | Té en laiton, pour connecter deux moteurs à un même réservoir, ou inversement.

GOLDENSHIP MADE IN THE USA

REF		
GS31069	1/4" NPT	1



new

REF	OEM
REC17710-ZW9-033	17710-ZW9-023 17710-ZW9-033

BF4 --> BF130 HP

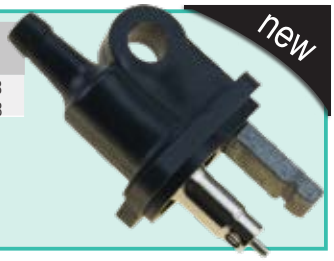

REF	OEM	
GS31030	17660-ZV5-902	3/8"

antigüos | old | vecchio | ancien

GOLDENSHIP MADE IN THE USA



REF	OEM	
GS31031	17660-ZV5-A00 17660-ZW9-003	1/4" NPT 3/8"

nuevos | news | nuovo | nouveau

GOLDENSHIP MADE IN THE USA



REF	OEM	
GS31034	17650-921-003ZB	3/8"

antigüos | old | vecchio | ancien

GOLDENSHIP MADE IN THE USA



REF	OEM	
GS31033	116977-ZV5-A00	1/4" NPT

nuevos | news | nuovo | nouveau

GOLDENSHIP



REF	OEM	
GS31032	116977-ZV5-900	1/4" NPT

antigüos | old | vecchio | ancien

GOLDENSHIP



PASAMAMPAROS

Para atravesar mamparos de hasta 12 mm. Fabricado en latón.

REF		
GS31064	3/8"	1

THRU HULL

For bulkhead up to 12 mm. Made in machined brass.



PASSASCAFO

Per attraversare paratie fino a 12 mm. Fabbricato in ottone.

PASSE-CLOISON

Pour traverser des cloisons jusqu'à 12 mm. Fait en laiton.

GOLDENSHIP

FILTRO DE COMBUSTIBLE Y ELEMENTOS
FUEL FILTERS AND ELEMENTS
FILTRI BENZINA E RACCORDI
FILTRE A ESSENCE ET CARTOUCHE DE RECHANGE

BRACKET

Con 2 tapones de bronce y 2 tubos de extensión. (2 entradas y 2 salidas).

REF		
REC25000	1/4"	AL
REC25010	1/4"	INOX /SS AISI316
REC25020	3/8"	AL
REC25030	3/8"	INOX /SS AISI316
RECOBBRACKET	1/4"	Plástico | Plastic Plastica | Plastique

BRACKET

With 2 brass plugs and 2 extension tubes. (2 inputs & 2 outputs).

SUPPORTO

Con 2 tappi di bronzo e 2 tubi di estensione. (2 ingressi entrata carburante e 2 uscite carburante).

TÊTE DE FILTRE À ESSENCE

Avec 2 bouchons en bronze et 2 tubes d'extension. (2 entrées et 2 sorties).



REC25000 - REC25020 | REC25010 - REC25030 | RECOBBRACKET

FILTRO COMBUSTIBLE SEPARADOR DE AGUA

REF	RO OEM	MICRON	
REC24942	06177-ZX2-000HE	10	4 7/16" 11 cm
REC35-802893Q01		10	3 3/4"
REC855686		28	4 7/16"
REC35-802893Q		25	3 3/4"
RACPFF5510		10	4 7/16"

WATER SEPARATING FUEL FILTER

FILTRO SEPARATORE ACQUA-BENZINA

FILTRE SEPARATEUR EAU-ESSENCE



RACPFF5510 | REC24942 | REC35-802893Q01 | REC855686 | REC35-802893Q

RACOR | RECMAR

Filtro original.

REF	MICRON	
RM35-802893Q	10	3 3/4"

OEM filter.



Filtro benzina originale.

Filtre à essence d'origine

FILTRO CON BRACKET

Con 2 tapones de bronce y 1 tubo de extensión.

REF	RO OEM	MICRON			BRACKET
REC24950		25	1/4"	50 GPH	AL
REC24952	06177-ZX2-000HE	10	1/4"	50 GPH	AL

OEM FILTER WITH BRACKET

With 2 brass plugs & 1 extension tube.

FILTRO BENZINA CON SUPPORTO

Con 2 tappi di bronzo e 1 tubo di estensione.

FILTRE A ESSENCE AVEC SUPPORT

avec 2 bouchons en bronze et 1 tube d'extension



RECMAR

FILTRO DECANTADOR DE COMBUSTIBLE COMPLETO CON VASO TRASPARENTE
COMPLET FUEL FILTER WITH TRANSPARENT BOWL
FILTRO DI DECANTAZIONE BENZINA COMPLETO CON VASCHETTA TRASPARENTE
FILTRE DÉCANTEUR ESSENCE AVEC BOL TRANSPARENT

REF		BRACKET
RAC320R-RAC-01		AL
RAC320R-RAC-03	RACS3213 LENS3213	Plástico Plastic Plastica Plastique

RACOR





REF			BRACKET
RECOBFILALU			AL
RECOBFILTER	RECOBELEMENT LENS3213	150 l/h	Plástico Plastic Plastica Plastique

RECMAR





FILTRO CON BOMBA CEBADORA
FILTER WITH PRIMMING PUMP
FILTRO CON POMPETA PER RIEMPIRE
FILTRE A ESSENCE AVEC POMPE D'AMORCAGE

REF		MICRON			
RAC490R-RAC-01	RACS3227 LENS3227	10	340 l/h	3/8" NPTF	150 hp

RACOR





FILTRO DECANTADOR GASOLINA
COMPLETE FUEL FILTER
FILTRO DECANTATORE BENZINA
FILTRE DÉCANTEUR ESSENCE

Filtro de combustible con braket. | Complete fuel filter with braket. | Filtro combustibile con supporto. | Filtre à carburant avec support.

REF		
RAC23299-10	RAC23289-10	130 HP (4 T/ Strokes)

RACOR





new

REF	MICRON	
PAF40-0701000EI	10	70 hp





RECMAR

REF	OEM		R.O. / OEM	MICRON		
REC90794-46866		REC90794-46868		10	117 l/h	175 hp







LLAVE PARA FILTRO
FILTER KEY
CHIAVE DA FILTRO
CLÉ À FILTRE

REF
RECYS-225-15



RACOR



REF	RAC120R-RAC-01	RAC320R-RAC-01	RAC320R-INOX-01 RAC320R-RAC-03	RAC320R-RAC-02 RAC320R-INOX-02
RO /OEM	06178-ZW1-030GH		06177-ZW1-801AH	
FLUJO MÁXIMO MAX. FLOW FLUSSO MASSIMO FLUX MAXIMAL	114 l/h 30 gph	340 l/h 60 gph	340 l/h 60 gph	340 l/h 60 gph
ELEMENTO ELEMENT ELEMENTO ELÉMENT	RACS3240 LENS3240 17670-ZW1-030GH	RACS3213 LENS3213	RACS3213 LENS3213 17670-ZW1-801AH	RACS3220UL
CAZOLETA TRANSPARENTE (sólo se recomienda para fueraborda.) CLEAR BOWL (Just for outboards) VASCHETTA TRASPARENTE (Solo nei fuoribordo.) BOL TRANSPARENT (uniquement recommandé pour le hors-bord.)	✔	✔	✔	✘
ROSCAS CENTRALES CENTRAL THREADS FILETTO CENTRALE TAILLE DU FILETAGE POUR LA CARTOUCHE	M18 x 1.5	1 1/4"	1 1/4"	1 1/4"
TAMAÑO ROSCA CABEZA HEAD PORT SIZE DIMENSIONE VITE TESTA TAILLE DU FILETAGE POUR LES RACCORDS	1/4-18 NPTF	1/4-18 NPTF	1/4-18 NPTF	1/4-18 NPTF
ALTURA X Ø HEIGHT X Ø ALTEZZA X Ø HAUTEUR X Ø	166 x 81 mm	238 x 102 mm	238 x 102 mm	238 x 102 mm
PESO WEIGHT PESO POIDS	0,5 kg	0,9 kg	0,9 kg	0,9 kg
CAIDA DE PRESIÓN PRESSURE DROP CADUTA DI PRESSIONE CHUTE DE PRESSION	0.15 PSI 0.01 bar	0.61 PSI 0.04 bar	0.61 PSI 0.04 bar	0.61 PSI 0.04 bar
PRESIÓN MÁXIMA MAX. PRESSURE PRESSIONE MASSIMA PRESSION MAXIMALE	7 PSI 0.05 bar	7 PSI 0.05 bar	7 PSI 0.05 bar	7 PSI 0.05 bar
DESMONTAJE CARTUCHO-CAZOLETA ELEMENT REMOVAL UNDERBOWL RIMOZIONE DELLA CARTUCCIA DÉMONTAGE DE LA CARTOUCHE	25,4 mm 1"	25,4 mm 1"	25,4 mm 1"	25,4 mm 1"
TEMPERATURA DE TRABAJO OPERATING TEMPERATURE TEMPERATURA DI LAVORO TEMPERATURE DE TRAVAIL	-40ºC +124ºC			

RÁCORES — RACORS — RACCORDI — RACCORDS

REF			
GS31065	1/4" NPT	3/8" = 9.5 mm	1
GS31166	1/4" NPT	5/16" = 7.9 mm	2
GS31155	3/8" NPT	3/8" = 9.5 mm	2
GS31156	3/8" NPT	5/16" = 7.9 mm	2
GS31157	3/8" NPT	1/4" = 6.4 mm	2



REF			
GS31066	1/4" NPT	5/16" = 7.9 mm	2
GS31067	1/4" NPT	3/8" = 9.5 mm	2

GOLDENSHIP



LLAVES PARA FILTRO — FILTER KEY — CHIAVE DA FILTRO — CLÉ À FILTRE

REF
RACRK22628

RACOR



REF	
REC70720	65 - 110 mm

RECMAR

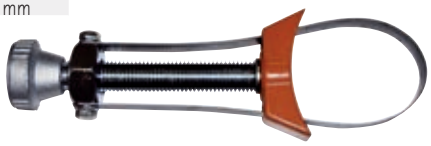

FILTRO COMBUSTIBLE PARA MONTAJE EN LÍNEA — IN-LINE FUEL FILTER — FILTRO BENZINA PER MONTARE IN LINEA — FILTRE A ESSENCE EN LIGNE

REF				
GS31001	50 l/h	6-8 mm	plástico plastic plastica plastique	1
GS31002	150 l/h	8-10 mm		1

GOLDENSHIP



GS31001



GS31002

REF	OEM
REC16910-ZV4-015	16910-ZV4-015

BF15AM/B/D3/DK2
BF8C/CX/B1/B2/D1/D2/ P8B1/P8B2/DK2
BF9.9AH/AK/AM/B/DK2/D1
BF25D4/DK2/A/A1/AX
BF30D4/DK2/A/A1/AX
BF20A/AX/D3
BF10B1/D1/P10B1/DH/DK2
BF75DK0/DK2/DK3
BF40D/DK2
BF50D/DK2
BF90DK0/DK2/DK4
BF100A
BF60A/AK1
BF80A



REF			
GS30435	6, 8, 10 mm	metal + cristal metal + crystal metallo + cristallo métal + verre	1

GOLDENSHIP



REF	OEM
REC16900-SA5-004	16900-SA5-004

BF35AM
BF40B/B2/BX/A4/A/A1/A2/AX/A3/AY
BF45AM
BF75A1/AT/AV/AX/A2/A3
BF90A1/AF/AV/AX/A2/A3
BF50A4/A/A1/A2/AX/A3/AY
(14ZW00E1M)



REF	OEM			
REC40145		1/4"	1/4"	plástico plastic plastica plastique
REC40155		5/16"	5/16"	
REC40165		3/8"	3/8"	
REC40135		5/16"	3/8"	



REF	OEM
REC16910-GB2-005	16900-GB2-005

BF4.5B/BX/B2/B4/B6
BF5A1/AH/AK/AM/AX/A2/A3/A4
BF6B/BX/D6
BF8AX/B/BX/AH/AK/AM
BF50F
BF75F
BF100F



REF	OEM
REC16900-SR3-004	16900-SR3-004

BF115A1 / A2 / A3 / AX
BF130A1 / A2 / A3 / AX

Series #14ZW50E1M



new

REF	OEM
REC16901-ZY3-003	16901-ZY3-003 16911-ZY3-003

BF115
BF135
BF150
BF175
BF200
BF225
BF250



new

REF	OEM
REC16911-ZZ5-003	16911-ZZ5-003

BF40D, DK2, DK4, E
DF50D, DK2, DK4
BF60A, AK1
BFF60A, AK1



REF	OEM
REC16911-ZY3-010	16911-ZY3-010

BF80A
BF100A
BF90D2/ D4 / DK0
BF75DK2 / DK3 / DK0
BF150AK2 / A4
BF135AK2 / A4
BF225AK2 / AK3 / AK1 / A6
BF200AK2 / AK3 / AK1 / A6
BF175AK2 / AK3 / AK1 / A6
BF250A
BF115D / DK1 / A2
BF130 A2



REF	OEM
REC16010-ST5-993	16900-ST5-993

BF115
BF130 / AX / AY / A1

Series #14ZW50E1M



new

REF	OEM		
RAC025-RAC-02	06176-ZW3-801AH	1/4" 18 NPTF	1/4" 18 NPTF

BF5
BF20



REF	OEM
RACS2502	17670-ZW3-801AH



ACEITE OIL OLIO HUILES

new

REF			
REC2TU6	1 L	6	2 STROKES TC-W3
REC2TU3	5 L	3	
REC5W40U6	1 L	6	SAE 5W40
REC5W40U3	5 L	3	
REC10W30U6	1 L	6	SAE 10W30
REC10W30U3	5 L	3	
REC10W40U6	1 L	6	SAE 10W40
REC10W40U3	5 L	3	
REC25W40U3	5 L	3	SAE 25W40
REC80W90U3	5 L	3	SAE 80W90
REC80W90U6	1 L	6	



REF			
RM92-858026QB1U6	1 L	6	2 STROKES
RM92-858027QB1U3	3,8 L	3	
RM92-8M0086220U6	1 L	6	SAE 10W30
RM92-8M0086221U3	4 L	3	



RM92-858026QB1U6



RM92-858027QB1U3



RM92-8M0086220U6



RM92-8M0086221U3

FILTRO DE ACEITE OIL FILTER FILTRO OLIO FILTRE A HUILE

FILTROS DE ACEITE OIL FILTER FILTRO OLIO FILTRES A HUILE

REF	OEM
REC35-822626Q03	15400-PM3-004 15400-PFB-014, 15400-PFRB-007 15400-ZW4-003 15400-PJ7-015 15400-PM3-405 15400-PFB-004



BF25DE4
BF30D4
BF8B2
BF8D2
BF10B2
BF10D2
BF10D4
BF15D3
BF15DK3
BF20D3
BF20DK2
BF20DK3
BF25DK2
BF30DK2
BF40DK2
BF40DK4
BF50DK2
BF50DK4
BF8D4
BFP10D2

REF	OEM
REC15400-PLM-A01PE	15400-PH1-F03 15400-POH-305PE 15400-POH-305 15400-ZJI-004 15400-PLM-A01PE 15400-RTA-003 15400-RTA-004



BF100A
BF100AK1
BF115A2
BF115D
BF115DK1
BF135A4
BF135AK2
BF150A4
BF150AK2
BF175A6
BF175AK1
BF175AK2
BF175AK3
BF175D
BF200A6
BF200AK1
BF200AK2
BF200AK3
BF200D
BF225A6
BF225AK1
BF225AK2
BF225AK3
BF225D
BF250A
BF250D
BF75DKO
BF75DK2
BF75DK3
BF75DK4
BF80A
BF80AK1
BF90DKO
BF90DK2
BF90DK4
BF90DK5
BFT100AK1
BFT80AK1

REF	OEM
REC15400-RBA-F01	15400-RBA-F01

V-TEC150
V-TEC175



REF	OEM
REC5GH-13440-00	15400-PFB-007

BF25
BF30
BF40



GUÍA FILTROS DE ACEITE OIL FILTER GUIDE GUIDA FILTRO OLIO GUIDE DES FILTRES A HUILE

	REF
BF8B2 BF8D2 BF8D4	REC35-822626Q03
BF10B2 BF10D2 BF10D4 BFP10D2	REC35-822626Q03
BF15D3 BF15DK3	REC35-822626Q03
BF20D3 BF20DK2 BF20DK3	REC35-822626Q03
BF25	REC5GH-13440-00
BF25DE4 BF25DK2	REC35-822626Q03
BF30	REC5GH-13440-00
BF30D4 BF30DK2	REC35-822626Q03
BF40	REC5GH-13440-00
BF40DK2 BF40DK4	REC35-822626Q03

		REF
BF50DK2 BF50DK4		REC35-822626Q03
BF75DK2 BF75DK3 BF75DK4 BF75DKO	M20 x 1.5	REC15400-PLM-A01PE
BF80A BF80AK1 BFT80AK1	M20 x 1.5	REC15400-PLM-A01PE
BF90DK2 BF90DK4 BF90DK5 BF90DKO	M20 x 1.5	REC15400-PLM-A01PE
BF100A BF100AK1 BFT100AK1	M20 x 1.5	REC15400-PLM-A01PE
BF115A2 BF115D BF115DK1	M20 x 1.5	REC15400-PLM-A01PE
BF135A4 BF135AK2	M20 x 1.5	REC15400-PLM-A01PE

		REF
BF150A4 BF150AK2	M20 x 1.5	REC15400-PLM-A01PE
BF175A6 BF175AK1 BF175AK2 BF175AK3 BF175D	M20 x 1.5	REC15400-PLM-A01PE
BF200A6 BF200AK1 BF200AK2 BF200AK3 BF200D	M20 x 1.5	REC15400-PLM-A01PE
BF225A6 BF225AK1 BF225AK2 BF225AK3 BF225D	M20 x 1.5	REC15400-PLM-A01PE
BF250A BF250D	M20 x 1.5	REC15400-PLM-A01PE
V-TEC150 V-TEC175	M20 x 1.5	REC15400-RBA-F01

BOMBA DE COMBUSTIBLE ELECTRICA | ELECTRIC FUEL PUMP | POMPA BENZINA ELETTRICA | POMPE À ESSENCE ÉLECTRIQUE

new

REF	OEM
REC16735-ZW5-003	16735-ZW5-003 16735-ZY3-004

BF100A, AK1
BTF100AK1
BF115A1, A2, A3, AX
BF130A1, A2, AX
BF135A4, AK2
BF150A4, AK2
BF75DK0, DK2, DK3, DK4
BF90DK0, DK2, DK4, DK5

BF80A, AK1
BFT80AK1
BF175D, A3, A6, AK1, AK2, AK3
BF200D, A2, A3, A6, AK1, AK2, AK3
DF225D, A2, A3, A6, AK1, AK2, AK3
BF250D, A

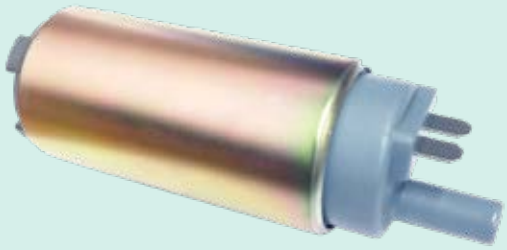

BOMBA DE COMBUSTIBLE MECÁNICA | MECHANICAL FUEL PUMP | POMPA BENZINA MECCANICA | POMPE À ESSENCE MECANIQUE

new

REF	OEM
REC16700-ZW1-004	16700-ZW1-004 16700-ZV5-003

BF20A, AX, A2
BF25A, A1, AX
BIF35AM
BF40B, B2, BX, A, A1, A2, AX, AY
BF45AM
BF30A, A1, AX
BF75A1, AT, AV, AX, A2
BF90A1, AT, AV, AX, A2
BF50A, A1, A2,AX, AY



INYECTORES | INJEKTOR | INIETTORE | INJECTEURS

INYECTOR | **INJEKTOR** | **INIETTORE** | **INJECTEURS**

new

REF	OEM
REC06164-PCA-000	06164-PCA-000

BF115AX
BF130AX



CARBURADOR | CARBURETOR | CARBURATORE | CARBURATEUR

AGUJA CARBURADOR | **CARBURETOR, NEEDLE VALVE** | **SPILLO CONICO CARBURATORE** | **POINTEAU CARBURATEUR**

REF	OEM
REC16011-881-741	16011-881-741

BF5 (-2003)
BF8
BF75 (-1997)
BF100 (-1997)



REF	OEM
REC16011-ZV4-005	16011-ZV4-005

BF8 (2001+)
BF9.9
BF15
BF20 (2003+)
BF25
BF30
BF35 (1997)
BF40
BF45 (1997)
BF50
BF75 (1997+)
BF90 (1997+)



KITS CARBURADORES | CARBURETOR KITS | KIT CARBURATORI | KIT CARBURATEUR

REF	OEM	
REC06160-ZV4-U11	06160-ZV4-U11	Honda KIT 1

BF9.9 (2000+)
BF15 (2002+)

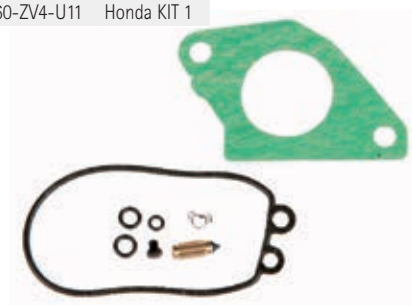

REF	OEM	
REC16010-ZW9-003	16010-ZW9-003	Honda KIT2

BF9.9 (2001+)
BF15 (2003+)

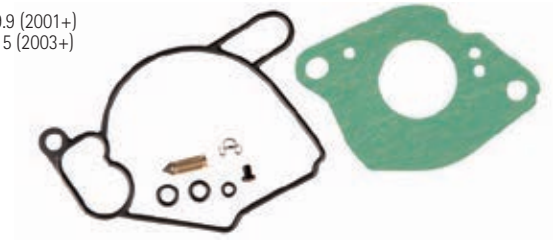

REF	OEM	
REC16010-ZV4-005	16010-ZV4-005	Honda KIT3

BF75 (1997+)
BF90 (1997+)



REF	OEM	
REC18-7053		Honda KIT4

BF8 (1996+)
BF75 (1996+)
BF100 (1996+)

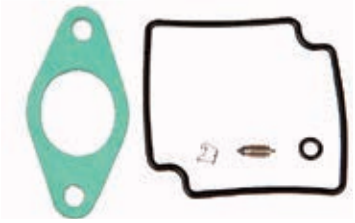

GUÍA CARBURADORES | GUIDE CARBURETORS | GUIDA CARBURATORI | GUIDE DES CARBURATEURS

	KIT
BF8C, CX	REC16010-ZV4-005
BF8B1, B2, D1, D2, D3, D4, DK2	REC16010-ZW9-003
BF8 (2001+)	REC18-7053
BFP8B1, B2, D1, D2, D3	REC16010-ZW9-003
BF9.9	REC18-7053
BF9.9AH, AK, AM, AX, AY, B, BX	REC16010-ZV4-005
BF9.9D1, D2, D3, DK2	REC16010-ZW9-003
BFP9.9D, D1, D2	REC16010-ZW9-003
BF10B1, B2, D1, D2, D4, K2	REC16010-ZW9-003
BFP10B1, B2, D1, D2	REC16010-ZW9-003
BF15	REC18-7053
BF15A1, A2, A3	REC06160-ZV4-U11 REC16010-ZV4-005
BF15AH, AM, AX, AY	REC16010-ZV4-005
BF15B, B2, BX	REC16010-ZV4-005
BF15D3, DK2, DK3	REC16010-ZW9-003
BF20 (2003+)	REC18-7053
BF20A, A2, AX	REC16010-ZV4-005

	KIT
BF20D3, DK2, DK3	REC16010-ZW9-003
BF25	REC18-7053
BF25A, A1, A2, A3, AX, D4, DK2	REC16010-ZV4-005
BF30	REC18-7053
BF30A, A1, A2, A3, AX, D4, DK2	REC16010-ZV4-005
BF35 (1997)	REC18-7053
BF35AM	REC16010-ZV4-005
BF40	REC18-7053
BF40A, A1, A2, A3, A4, AX, AY, B, B2, BX	REC16010-ZV4-005
BF45 (1997)	REC18-7053
BF45AM	REC16010-ZV4-005
BF50	REC18-7053
BF50A, A1, A2, A3, A4, AX, AY	REC16010-ZV4-005
BF75 (1997+)	REC18-7053
BF75A1, A2, A3, AT, AV, AX	REC16010-ZV4-005
BF90 (1997+)	REC18-7053
BF90A1, A2, A3, AT, AV, AX	REC16010-ZV4-005

P. 37

REF
GEGC15



SISTEMA ELÉCTRICO
ELECTRIC SYSTEM
SISTEMA ELETTRICCO
SYSTÈME ÉLECTRIQUE

SENSORES — SENSORS — SENSORE — CAPTEURS

SENSOR MAP — MAP SENSOR — SENSORE MAP — CAPTEUR MAP

REF	OEM
REC37830-PGK-A01	37830-PGK-A01

BF135A4
BF150A4
BF175A3, A6
BF200A2, A3, A6
BF225A2, A3, A6



REF	OEM
REC37830-PNC-003	37830-PNC-003

BF40DK2, D
BF50DK2,D
BF75, DK0, DK2
BF90DK0, DK2



REF	OEM
REC37830-RNA-A01	37830-RNA-A01

BF100A, AK1
BFT100AK1
BF40E
BF80A, AK1
BF75DK3, DK4
BF90DK4, DK5
BF60A
BF115D, DK1

BF40D
BF135A4, AK2
BF50D
BF150A4, AK2
BF175D, AK1, AK2, AK3
BF200D, AK1, AK2, AK3
BF250D, A



SENSOR POSICIÓN ARBOL DE LEVAS — CAMSHAFT SENSOR — SENSORE ALBERO A CAME — CAPTEUR DE POSITION D'ARBRE A CAMES

REF	OEM
REC37510-PNB-003	37510-PNB-003

BF115D, DK1
BF135A4, AK2
BF150A4, AK2



REF	OEM
REC37500-PNB-003	37500-PNB-003

BF175D
BF200D
BF225D
BF250D
BF115D, DK1
BF135A4, AK2
BF150A4, AK2
BF75DK0, DK2

BF90DK0, DK2, DK5
BF75DK3, DK4
BF100A, AK1
BF80A, AK1
BF60A
BF40E



SENSOR POSICIÓN CIGÜEÑAL — CRANKSHAFT SENSOR — SENSORE ALBERO MOTORE — CAPTEUR DE POSITION DU VILEBREQUIN

REF	OEM
REC37840-R70-A01	37840-R70-A01

BF175D
BF200D
BF225D
BF250D



SENSOR PRESIÓN DE ACEITE — OIL PRESSURE SENSOR — SENSORE PRESIONE DELL'OLIO — CAPTEUR DE PRESSION D'HUILE

REF	OEM
REC37260-RNA-A01	37260-RNA-A01

BF175D
BF200D
BF225D
BF250D
BF115D, DK1,
BF135A4, AK2

BF150AK2
BF75DK3, DK4
BF90DK4, DK5
BF100A, AK1
BF80A, AK1
BFT100AKI



SENSOR DETONACIÓN · KNOCK SENSOR · SENSORE ANTIDETONAZIONE · CAPTEUR DE CLIQUETIS

REF	OEM
REC30530-P8F-A01	30530-P8F-A01

BF175A3, A6
BF200A2, A3, A6
BF225A2, A3,A6



new

REF	OEM
REC30530-RNA-A01	30530-RNA-A01

BF175AK1, AK2, AK3
BF200AK1, AK2, AK3
BF225AK1, AK2, AK3
BF250A



new

REF	OEM
REC30530-PNA-003	30530-PNA-003

BF135A4
BF150A4



new

SENSOR MAT TEMPERATURA DEL AIRE · SENSOR MAT, AIR TEMPERATURE · SENSORE MAT, TEMPERATURA ARIA · CAPTEUR MAT DE TEMPERATURE D'AIR

REF	OEM
REC37880-PLC-004	37880-PLC-004

BF115D, DK1
BF135A4, AK2
BF150A4, AK2
BF75DK0, DK2,
DK3, DK4
BF90DK2
BF80A, AK1
BFT80AK1
BF60A, AK1
BFP60A,
BF40D, E
BF50D,
BF40DK2
BF50DK2



new

SENSOR OXÍGENO · O2 SENSOR · SENSORE OSSIGENO · CAPTEUR À OXYGENE

REF	OEM
REC35668-ZY6-003	35668-ZY6-003

BF115D, DK1
BF135A4, AK2
BF150A4, AK2,



REF	OEM
REC35655-ZY9-003	35655-ZY9-003

BF75DK0, DK2
BF90DK0, DK2
BF75DK0, DK2
BF90DK0, DK2



REF	OEM
REC35655-ZY3-013	35655-ZY3-013

BF175A3, A6,
BF200A2, A3, A6
BF225A2, A3, A6,



REF	OEM
REC35655-ZY3-C01	35655-ZY3-C01

BF250A,
BF175AK1, AK2, AK3
BF200AK1, AK2, AK3
BF225AK1, AK2, AK3,
BF40D, DK2, DK4
BF50D, DK2, DK4,

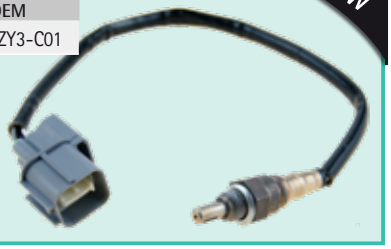

new

RELÉ · RELAY · RELE · RELAIS

REF	OEM
REC38580-ZY6-013	38580-ZY6-013/03

BF135A4
BF150A4

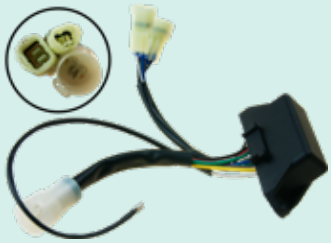

new

REF	OEM
REC8580-ZY9-023	38580-ZY9-003/013/023 HZY-38580-003

BF75DK0, FK2, DK3, DK4
BF90DK0, DK2, DK4, DK5
BF100A, AK1
BF80A, AK1



new

BOBINAS COILS BOBINE BOBINES

REF	OEM
REC30520-PWC-003	30520-PWC-S01

BF75DK0, DK2, DK3
BF90DK0, DK2, DK4
BF100A
BF80A



REF	OEM
REC30520-PNA-007	30520-PNA-007

VTEC
BF135A4
BF150A4
BF115D, DK1
BF135A4,BF150A4,
BF135AK2,BF150AK2



REF	OEM
REC30580-ZV4-013	30580-ZV4-023

BF15AH, AK, AM, B, A1, A2, AX, AY, B2, BX, A3
BF9.9AH, AK, AM, B, AX, AY
BF8C, CX



new

REF	OEM
REC30520-ZVL-003	30520-ZYL-003

B175D
BF200D
BF225D
BF250D

new

REF	OEM
REC30520-ZX2-003	30520-ZX2-003 HZX2-30520-003

B175AK3
BF200AK3
BF225AK3
BF250A

new

REF	OEM
REC30520-ZY3-003	30520-Z3-003

B175A3,A6,AK1,AK2
BF200A2,A3,A6,AK1,AK2
BF225A2,A3,A6,AK1

BUJÍAS SPARK CANDELE BOUGIES

		REF NGK
BF2D	1999	NGKCR5HSB
BF2/A	1984	NGKBMR4A
BF2B		NGKCR5HSB
BF2.3		NGKCR5HSB
BF4.5B		NGKBPR5ES
BF5AK		NGKBPR5ES
BF5	1984	NGKBPR5ES
BF5A		NGKBPR5ES
BF6B	2003	NGKDR4HS
BF6		NGKDR4HS
BF6CH	2004	NGKCR5EH-9
BF7,5	1977	NGKDR5HS
BF8	2001	NGKCR5EH-9
BF8D		NGKCR5EH-9
BF8D1	2001	NGKCR5EH-9
BF8	1987-00	NGKDR5HS
BF8 A/B/C	1990-00	NGKDR5HS
BF8B1		NGKCR5EH-9
BF9/A		NGKDR5HS
BF9.9	1987-01	NGKDR5HS
BF9.9 A/B		NGKDR5HS
BF9.9D1	2001	NGKCR5EH-9
BF10D	2001	NGKCR5EH-9
BF10/B1	2001	NGKCR5EH-9
BF15D	2003	NGKCR5EH-9
BF15B		NGKDR5HS
BF15	1987-90	NGKDR6HS
BF15A	1996-02	NGKDR5HS
BF20	1993	NGKDR7EA
BF20/F	1985	NGKBMR4A
BF20D	2003	NGKCR5EH-9
BF25/A	1993	NGKDR7EA
BF25B		NGKDR7EA

		REF NGK
BF25D4	2004	NGKDR7EA
BF28		NGKCR5HSB
BF28D		NGKCR5HSB
BF30/A	1994	NGKDR7EA
BF30D4	2004	NGKDR7EA
BF35/A	1990	NGKDR7EA
BF40B		NGKDR7EA
BF40/A	1994	NGKDR7EA
BF45/A	1990	NGKDR7EA
BF50/F	1985-94	NGKBPR5ES
BF50	1986-94	NGKBPR5ES
BF50/A	1994	NGKDR7EA
BF60A		NGKLMAR6C-9
BF70A		NGKDR7EA
BF75	2003	NGKDR7EA
BF75B		NGKDR7EA
BF75D		NGKIZFR6K-11E
BF75E		NGKDR5HS
BF75A	1995	NGKDR7EA
BF75		NGKDR5HS
BF90/A	1995	NGKDR7EA
BF90D		NGKIZFR6K-11E
BF100E		NGKDR5HS
BF100		NGKDR5HS
BF115/A	1998	NGKZFR7F
BF130A	1998	NGKZFR7F
BF135A		NGKIZFR6K11
BF150A		NGKIZFR6K11
BF175A		NGKIZFR6K11
BF200A V6	2002	NGKIZFR6K11
BF225A V6	2002	NGKIZFR6K11
BF250A	2010	NGKIZFR6K11



		REF CHAMPION
2HP	BF2A,D	CHACJ14
5HP	OHC - BF5A	CHARN11YC4
7.5HP	B75	CHAP10Y
8.0HP	OHC - BF8A	CHAP10Y
9.9HP	BF9.9A	CHAP10Y
15HP	OHC - BF15A	CHAP8Y
20HP	BF20A	CHARA6HC
25HP	OHC - BF25A	CHARA8HC
30HP	OHC - BF30A	CHARA8HC
35HP	BF35A	CHARA8HC
40HP	OHC - BF40A	CHARA8HC
45HP	BF45A	CHARA8HC
50HP	OHC - BF50A	CHARA8HC
70HP	OHC - BF70A	CHARA8HC
75HP	BF75A	CHARA8HC
90HP	OHC - BF90A	CHARA8HC
115HP	OHC	CHARC9MC4
130HP	OHC	CHARC9MC4
150HP	BF150, BF200, 225	CHARC9MC4



MOTORES DE ARRANQUE STARTERS MOTORINI AVVIAMENTO DEMARREURS

MOTORES DE ARRANQUE STARTERS

REF	OEM		
REC31200-ZW9-802	31200-ZW9-802 31200-ZW9-801	12V	11 CCW

BF8B2, D2, D3, D4
BFP8B2, D2, D3, DK2
BF9,9DK2, D3
BF10D4, DK2, 0B2,
BFP10B2, D2,
BFP9,9D3,



REF	OEM		
PH130-0064	31200-ZW1-004	12V 1.4 KW	13 CW

BF75A1, A2, A3, AT, AV, AX,
BF90A1, A2, A3, AT, 90AV, AX



REF	OEM		
PH130-0054	31200-ZV5-013 31200-ZV5-003	12V 0.9 KW	9 CW

BF35AM,
BF40B, BX, AX, A1, A2, A3, A4, A'
BF45AM, A, A1,
BF50A, A1, A2, A3, A4, AX, AY,



MOTORINI AVVIAMENTO DEMARREURS

REF	OEM		
REC31200-ZY6-003	31200-ZY6-003 31200-ZY9-003 31200-ZY9A-0031	12V 1.00 KW	9 CW

BF115D, DK1
BF135A4, AK2
BF150A4, AK2
BF75DK0, DK2
BF90DK2, DK0



REF	OEM		
PH130-0065	31200-ZW5-003	12V 1.4 KW	13 CW

BF115A1, A2, A3, AX,
BF130A1, A2, A3, AX,



REF	OEM		
PH130-0070	31200-ZY3-003 31200-ZY3A-0034	12V 1.7 KW	9 CW

BF175D, A3, A6, AK1, AK2, AK3
BF200D, A2, A3, A6, AK1, AK2, AK3
BF225D, A2, A3, A6
BF250D, A, AK1, AK2, AK3



GUÍA DE ARRANQUE STARTER GUIDE GUIDE AVVIAMENTO GUIDE DE DÉMARREURS

BF8	2001	REC31200-ZW9-802	
BF10	2001	REC31200-ZW9-802	
BF9,9	2001	REC31200-ZW9-802	
BF35	1995-1997	PH130-0054	
BF40	1995	PH130-0054	
BF45	1995-1997	PH130-0054	
BF50	1995	PH130-0054	
BF75	2007	REC31200-ZY6-003	
BF75	1997-2006	PH130-0064	
BF90	1997-2006	PH130-0064	

BF90	2007	REC31200-ZY6-003	
BF115	1999-2006	PH130-0065	REC31630-ZW5-003
BF115	2007	REC31200-ZY6-003	REC31630-ZY6-003
BF130	1999-04	PH130-0065	REC31630-ZW5-003
BF135	2004	REC31200-ZY6-003	REC31630-ZY6-003
BF150	2004	REC31200-ZY6-003	REC31630-ZY6-003
BF175	2002	PH130-0070	REC31630-ZY3-003
BF200	2002	PH130-0070	REC31630-ZY3-003
BF225	2002	PH130-0070	REC31630-ZY3-003
BF250	2012	PH130-0070	REC31630-ZY3-003

DESCONECTORES DE SEGURIDAD | CUT OFF SWITCHES | CHIAVETTA DI SICUREZZA | COUPE CIRCUIT DE SECURITE

DESCONECTADOR DE SEGURIDAD | IGNITION KILL SWITCHES | INTERRUTTORE DI STOP | COUPE CIRCUIT DE SECURITE

Interruptor de encendido para motores. Aisla los circuitos en unidades dobles para prevenir el retorno al alternador.

Emergency and stop switch. Isolates circuits on dual units to prevent feedback.

Interruttore di accensione per motori. Isola i circuiti in doppie unità per prevenire il ritorno all'alternatore.

Interrupteur d'arrêt d'urgence. Il isole les circuits en double pour éviter le retour à l'alternateur.

REF					
THKS-1	Un fueraborda	Single outboard	Un fuoribordo	Un hors-bord	1
THKS-2	Un intraborda	Single I/O	Un entrobordo	Un inboard	1
THKS-12	Dos fuerabordas	Dual outboard	Due fuoribordo	Deux hors-bord	1
THKS-22	Dos intrabordas	Dual I/O	Due entrobordo	Deux inboard	1
THL-4	Cuerda recambio	Spare lanyard	Corda ricambio	Cordon de rechange	1



KITS | KITS | KIT | KITS

Interruptor de encendido para todo tipo de motores fueraborda o intraborda

Emergency and stop switch for inboard or outboards.

Interruttore di accensione per tutti i tipi di motori fuoribordo o entrobordo.

Coupe circuit de sécurité pour moteur inboard ou hors-bord

REF KIT	CUERDA / WIRE / CORDA / CORDON	
REC40970	REC40990	1



REF KIT	CUERDA / WIRE / CORDA / CORDON	
GS11290	GS11291	1



REF KIT	
GS11292	1



REF	
GS11294	1



REF	OEM
REC36180-ZV5-033	36180-ZV5-033 36180-ZV5-023 36180-ZV5-013 36180-ZV5-003

BF8-->BF250



ALTERNADOR | ALTERNATOR | ALTERNATORE | ALTERNATEUR

ALTERNADOR | ALTERNATOR | ALTERNATORE | ALTERNATEUR

REF	OEM			
REC31630-ZY6-003	31630-ZY6-003 31630-ZY6-013	12V 55A	REC31638-ZY6-003	4

BF115D, DK1, BF135A4, AK2 BF150A4, AK2



REF	OEM		
REC31630-ZY3-003	31630-ZY3-003	REC31638-ZY3-003	6

BF250A, BF175A3, A6, AK1, AK2, AK3, D BF200A2, A3, A6, AK1, AK2, AK3, D BF225A2, A3, A6, AK1, AK2, AK3, D BF250D, A,



new

REF	OEM		
REC31630-ZW5-003	31630-ZW5-003	12V 55A CW	4

BF115A1, A2, A3, AX
BF130A1, A2, A3, A4, AX



CORREAS DE ALTERNADOR / ALTERNATOR BELT / CURROIA ALTERNATORE / COURROIE D'ALTERNATEUR

new

REF	OEM
REC31638-ZY3-003	31638-ZY3-003

BF175A3, A6, AK1, AK2, AK3, D,
BF200A2, A3, A6, AK1, AK2, AK3, D,
BF225A2, A3, A6, AK1, AK2, AK3, D,
BF250D



new

REF	OEM
REC31638-ZY6-003	31638-ZY6-003

F115D,
BF115D, DK1,
BF135A4, AK2
BF150A4, AK2



TRIM, TILT & POWER TRIM

INSTALACIÓN ELÉCTRICA / WIRING HARNESS / INSTALLAZIONE ELETTRICA / INSTALLATION ELECTRIQUE

KIT CONVERSIÓN
Sustituye de 2 a 3 cables.

CONVERSION KIT
Converts 3-wire Tilt and Trim motors to 2-Wire design

KIT CONVERSIONE
Sustituisce da 2 a 3 cavi.

KIT DE CONVERSION.
Passe un faisceau de 2 à 3 fils

REF
PH200-WH01



TRIM COMPLETO / COMPLETE TRIM ASSEMBLY / MOTORINO TRIM COMPLETO / MOTEUR DE TRIM

REF	OEM			
PH200-T046	36120-ZV5-822	12V	4	2

BF40, BF50 (2002-03)



REF	OEM			
PH200-T021	36120-ZV5-821	12V	4	2

BF35AM
BF40B, B2, BX, A, A1, A2, AX, AY
BF45AM
BF50A, A1, A2, AX, AY



REF	OEM		
REC36120-ZY3-013	36120-ZY3-013	12V	4

BF175A3, A6, AK1, AK2
BF200A2, A3, A6, AK2
BF225A2, A3, A6, AK1, AK2,



REF	OEM		
REC36120-ZW4-H12	36120-ZW4-H12	12V	4

BF40A4,
BF50A4,
BF40D, DK2, DK4
BF50D, DK2, DK4



REF	OEM		
REC36120-ZY6-013	36120-ZY6-013 36120-ZY6-023	12V	4

BF115D, DK1
BF135A4, AK2
BF150A4, AK2



REF	OEM		
REC36120-ZY9-003	36120-ZY9-003 36120-ZY9-013	12V	4

BF75DK0, DK2, DK3
BF90DK0, DK2, DK4
BF100A
BF80A



POWER TRIM COMPLETO — COMPLETE POWER TRIM ASSEMBLY — MOTORINO POWER TRIM COMPLETO — POWER TRIM COMPLET

REF
REC18-6865

3 RAM
115-225HP
BF115+

SHOWA SYSTEM



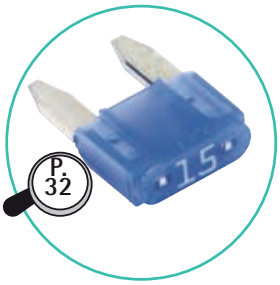

RELÉ DE POWER TRIM — POWER TRIM RELAY — RELE POWER TRIM — RELAIS POWER TRIM

new

REF	OEM
REC38550-ZY6-003	38550-ZY6-003 HZY-638550-003

BF115D, DK1
BF135A4, AK2
BF150A4,AK2



new

REF	OEM
REC38550-ZV5-823	38550-ZV5-823

BF40B2,A4,A2,A3
BF50A4,A2

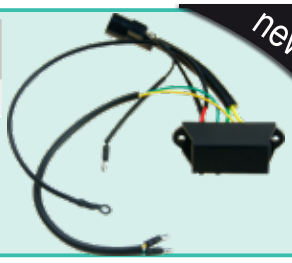

EXTRACTOR TAPONES TRIM — TRIM PLUGS EXTRACTOR — ESTRATTORE PER TAPPI DI TRIM — KIT EXTRACTEUR DE BOUCHONS TRIM

new

REF
RECTOOLTRIMKIT

RECTOOLTRIM1 +
RECTOOLTRIM2 +
RECTOOLTRIM 3



REF					A
RECTOOLTRIM1	1/2"	+ RECPIN4	+	RECPIN4.5	38 mm
RECTOOLTRIM2	1/2"	+ RECPIN4	+	RECPIN4.5	32 mm
RECTOOLTRIM3	1/2"	+ RECPIN6			35 mm

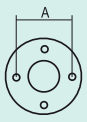

TRIM PISTON	TILT PISTON	
RECTOOLTRIM2	RECTOOLTRIM3	75 --> 225 (1997+)

REF	
RECPIN4	3 PIN x 4 mm
RECPIN4.5	3 PIN x 4.5 mm
RECPIN6	3 PIN x 6 mm



Los pines de repuesto no tienen garantía.
Replacement pins are not guaranteed.
I perni di ricambio non sono garantiti.
Les pins de remplacement ne sont pas garanties

SISTEMA DE GOBIERNO
STEERING SYSTEM
SISTEMA DI GUIDA
SYSTÈME DE COMMANDE

MANDOS DE CONTROL | ENGINE CONTROLS | COMANDI DI CONTROLLO | BOITIER DE COMMANDE

MANDO LATERAL | SIDE CONTROL | COMANDO LATERALE | BOITIER LATERAL

REF	OEM	POWER TRIM
REC24800-ZZ5-A02	24800-ZZ5-A02 24800-ZZ5-A01 24800-ZZ5-A22	✔

(NHK MEC) BF40 --> BF250
EFI
4 LED

RECMAR

new



MANDO PARA CONSOLA | CONSOLE CONTROL | COMANDO PER CONSOLLA | BOITIER POUR CONSOLE

REF	RO OEM	TRIM TILT
REC06240-ZW5-U40	06240-ZW5-U40 06240-ZW5-U001	✔

REF	RO OEM	TRIM TILT
REC06240-ZW5-U60	06240-ZW5-U60	✔

BF40 --> BF250

RECMAR

new





INTERRUPTOR DE TRIM MANDOS LATERALES | TRIM SWITCH SIDE CONTROLS | INTERRUTTORE TRIM COMANDO LATERALE | INTERRUPTEUR TRIM BOITIER LATERAL

REF	OEM
REC35370-ZZ5-D02	35370-ZZ5-D02

DF8 -->DF250



REF	OEM
REC35340-ZZ5-D21	35340-ZZ5-D21

DF40-->DF250 (2007+)



INTERRUPTOR DE TRIM MANDOS CONSOLA | TRIM SWITCH CONTROLS | INTERRUTTORE TRIM PANELLO | INTERRUPTEUR TRIM CONSOLE

REF	OEM
REC35370-ZW5-U02	35370-ZW5-U02

A



REF	OEM
REC35370-ZW5-U12	35370-ZW5-U12

BF25 --> BF250

B



LLAVES ARRANQUE | IGNITION STARTER SWITCH | CHIAVI DI ACCENSIONE | CONTACTEUR A CLÉ

REF	OEM
REC35100-ZV5-013	35100-ZV5-013

BF8 --> BF250



CABLES DE CONTROL | CONTROL CABLES | CAVI COMANDO | CÂBLES DE COMMANDE

Recorrido trabajo: 76 mm. Rosca 10-32"

Travel 3" Threaded 10-32"

Estensione 76 mm Filetto 10-32"

Course: 76 mm. Fil 10-32





maxflex

PRETECH Cable and Controls

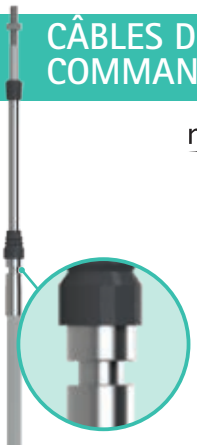

REF	RO	
PRE3300C05	24911-ZW7-U01	5' / 1,52 m
PRE3300C06	24912-ZW7-U01	6' / 1,83 m
PRE3300C07	24913-ZW7-U01	7' / 2,13 n
PRE3300C08	24914-ZW7-U01	8' / 2,45 m
PRE3300C09	24915-ZW7-U01	9' / 2,75 m
PRE3300C10	24916-ZW7-U01	10' / 3,05 m
PRE3300C11	24917-ZW7-U01	11' / 3,35 m
PRE3300C12	24918-ZW7-U01	12' / 3,65 m
PRE3300C13	24919-ZW7-U01	13' / 3,95 m
PRE3300C14	24920-ZW7-U01	14' / 4,25 m
PRE3300C15	24921-ZW7-U01	15' / 4,60 m
PRE3300C16	24922-ZW7-U01	16' / 4,90 m
PRE3300C17	24923-ZW7-U01	17' / 5,20 m
PRE3300C18	24924-ZW7-U01	18' / 5,50 m

REF	RO	
PRE3300C19	24925-ZW7-U01	19' / 5,80 m
PRE3300C20	24926-ZW7-U01	20' / 6,10 m
PRE3300C21	24927-ZW7-U01	21' / 6,40 m
PRE3300C22	24928-ZW7-U01	22' / 6,70 m
PRE3300C23	24929-ZW7-U01	23' / 7,00 m
PRE3300C24	24930-ZW7-U01	24' / 7,30 m
PRE3300C25	24931-ZW7-U01	25' / 7,60 m
PRE3300C26	24932-ZW7-U01	26' / 7,90 m
PRE3300C27	24933-ZW7-U01	27' / 8,25 m
PRE3300C28	24934-ZW7-U01	28' / 8,55 m
PRE3300C29	24935-ZW7-U01	29' / 8,85 m
PRE3300C30	24936-ZW7-U01	30' / 9,15 m
PRE3300C31	24937-ZW7-U01	31' / 9,45 m
PRE3300C32	24938-ZW7-U01	32' / 9,75 m

SISTEMA DE REFRIGERACIÓN
COOLING SYSTEM
SISTEMA DI RAFFREDDAMENTO
SYSTÈME DE REFROIDISSEMENT

TERMOSTATO THERMOSTAT TERMOSTATO THERMOSTAT

TERMOSTATOS THERMOSTATS TERMOSTATO THERMOSTATS

REF	OEM	°C
REC19300-881-761	19300-881-761	52°C

BF4.5B, BX, BK2, B2, B4, B6, BK0
BF5AH, AK, AM, AX, AK2, A2, A3, A4
BF15AH, AK, AM, B, A1, A2, A3, AX, AY, B2, BX
F6B, BX
BF8AX, B, BX, C, CX, AH, AK, AM
BF100F
BF75F
BF9.9AH, AK, AM, B, AX, BX, AY



REF	OEM	°C
PAF15-07000031	19300-ZW9-003 19300-881-741 19300-921-003	60°C

BF25D4, DK2
BF30D4, DK2
BF40A, D, DK2, E
BF50A, D, DK2
BF8B1, B2, D1, D2, DK2, D3, D4
BF9.9DK2, D1, D2, D3
BF10B1, B1, D4, DK2, B2, D2
BF15D3, DK2
BF20D3
BF200A
BF225A
BF75DK0, DK2, DK3
BF90DK0, DK2, DK4
BF100A
BF80A
BF60A, AK1



new

REF	OEM	°C
REC67F-12411-01	19300-ZX2-003	60°C

BF175D,
BF200D,
BF225D,
BF250A, D



REF	OEM	°C
REC19300-ZV5-043	19300-ZV5-003, 19300-ZV5-013, 19300-ZV5-023, 19300-ZV5-033, 19300-ZV5-043	72°C

BF35AM
BF40B, B2, BX, AX, A1, A2, A3, AY
BF45AM
BF20AX, A
BF25A, A1, AX
BF30A, A1, AX, A2, A3
BF75A1, AT, AV, AX, A2, A3
BF90A1, AT, AV, AX, A2, A3
BF115A1, A2, AX
BF130A1, A2, AX
BF50A2, AX, A1, A3, AY
BF20A2, A3
BF25A1, A2, A3

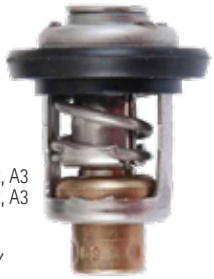

new

REF	OEM	°C
REC6E5-12411-30	19300-ZY6-003	50°C

BF75DK0, DK2, DK3, DK4
BF80A, AK1
BF90DK0, DK2, DK4, DK5
BF100A, AK1
BF115D, DK1
BF135A4, AK2
BF150A4, AK2
BFT80AK1
BFT100AK1



new

REF	OEM	°C
REC6AH-12411-00	19300-ZY3-023	60°C

BF115A2, A3, D, DK1,
BF130A2, A3,
BF135A4, AK2,
BF150A4, AK2,
BF175A3, A6, AK1, AK2, AK3,
BF200A2, A3, A6, AK1, AK2, AK3,
BF225A2, A3, A6, AK1, AK2, K3,



GUÍA TERMOSTATO THERMOSTAT GUIDE GUIDA TERMOSTATO GUIDE DES THERMOSTATS

	REF
B75K2	PAF15-07000031
B75K3	PAF15-07000031
BD115DK1	REC6E5-12411-30
BD130A2	REC19300-ZV5-043
BF100A	PAF15-07000031
BF100A	PAF15-07000031
BF100A	REC6E5-12411-30
BF100AK1	PAF15-07000031
BF100AK1	REC6E5-12411-30
BF100B	PAF15-07000031
BF100C	PAF15-07000031
BF100D	PAF15-07000031
BF100E	PAF15-07000031
BF100F	PAF15-07000031
BF100F	REC19300-881-761
BF10B1	PAF15-07000031
BF10B2	PAF15-07000031
BF10D1	PAF15-07000031

	REF
BF10D2	PAF15-07000031
BF10D4	PAF15-07000031
BF10DK2	PAF15-07000031
BF115A1	REC19300-ZV5-043
BF115A2	REC19300-ZV5-043
BF115A2	REC6AH-12411-00
BF115A3	REC6AH-12411-00
BF115D	REC6AH-12411-00
BF115D	REC6E5-12411-30
BF115DK1	REC6AH-12411-00
BF130A1	REC19300-ZV5-043
BF130A2	REC6AH-12411-00
BF130A3	REC6AH-12411-00
BF130AX	REC19300-ZV5-043
BF135A4	REC6AH-12411-00
BF135A4	REC6E5-12411-30
BF135AK2	REC6AH-12411-00
BF135AK2	REC6E5-12411-30

	REF
BF150A4	REC6AH-12411-00
BF150A4	REC6E5-12411-30
BF150AK2	REC6AH-12411-00
BF150AK2	REC6E5-12411-30
BF15A1	REC19300-881-761
BF15A2	REC19300-881-761
BF15A3	REC19300-881-761
BF15AH	REC19300-881-761
BF15AK	REC19300-881-761
BF15AM	REC19300-881-761
BF15AX	REC19300-881-761
BF15AY	REC19300-881-761
BF15B2	REC19300-881-761
BF15BX	REC19300-881-761
BF15D3	PAF15-07000031
BF15DK2	PAF15-07000031
BF15DK3	PAF15-07000031
BF175A3	REC6AH-12411-00

	REF
BF175A6	REC6AH-12411-00
BF175AK1	REC6AH-12411-00
BF175AK2	REC6AH-12411-00
BF175AK3	REC6AH-12411-00
BF175D	REC67F-12411-01
BF200A2	PAF15-07000031
BF200A2	REC6AH-12411-00
BF200A3	REC6AH-12411-00
BF200A6	REC6AH-12411-00
BF200AK1	REC6AH-12411-00
BF200AK2	REC6AH-12411-00
BF200AK3	REC6AH-12411-00
BF200D	REC67F-12411-01
BF20A	REC19300-ZV5-043
BF20A2	REC19300-ZV5-043
BF20AX	REC19300-ZV5-043
BF20D3	PAF15-07000031
BF20DK2	PAF15-07000031

	REF
BF20DK3	PAF15-07000031
BF225A2	PAF15-07000031
BF225A2	REC6AH-12411-00
BF225A3	REC6AH-12411-00
BF225A6	REC6AH-12411-00
BF225AK1	REC6AH-12411-00
BF225AK2	REC6AH-12411-00
BF225AK3	REC6AH-12411-00
BF225D	REC67F-12411-01
BF250A	REC67F-12411-01
BF250D	REC67F-12411-01
BF25A	REC19300-ZV5-043
BF25A1	REC19300-ZV5-043
BF25A2	REC19300-ZV5-043
BF25A3	REC19300-ZV5-043
BF25AX	REC19300-ZV5-043
BF25D4	PAF15-07000031
BF25DK2	PAF15-07000031
BF30A	REC19300-ZV5-043
BF30A1	REC19300-ZV5-043
BF30A2	REC19300-ZV5-043
BF30A3	REC19300-ZV5-043
BF30AX	REC19300-ZV5-043
BF30D4	PAF15-07000031
BF30DK2	PAF15-07000031
BF35AM	REC19300-ZV5-043
BF4,5B	REC19300-881-761
BF4,5B2	REC19300-881-761
BF4,5B4	REC19300-881-761
BF4,5B6	REC19300-881-761
BF4,5BK0	REC19300-881-761
BF4,5BK2	REC19300-881-761
BF4,5BX	REC19300-881-761
BF4,9DH	REC19300-881-761
BF40A	REC19300-ZV5-043
BF40A1	REC19300-ZV5-043
BF40A2	REC19300-ZV5-043
BF40A3	REC19300-ZV5-043
BF40A4	PAF15-07000031
BF40AX	REC19300-ZV5-043
BF40AY	REC19300-ZV5-043

	REF
BF40B	REC19300-ZV5-043
BF40B2	REC19300-ZV5-043
BF40BX	REC19300-ZV5-043
BF40D	PAF15-07000031
BF40DK2	PAF15-07000031
BF40DK4	PAF15-07000031
BF40E	PAF15-07000031
BF45AM	REC19300-ZV5-043
BF4AH	REC19300-881-761
BF50A	REC19300-ZV5-043
BF50A1	REC19300-ZV5-043
BF50A2	REC19300-ZV5-043
BF50A3	REC19300-ZV5-043
BF50A4	PAF15-07000031
BF50AX	REC19300-ZV5-043
BF50AY	REC19300-ZV5-043
BF50D	PAF15-07000031
BF50DK2	PAF15-07000031
BF50DK4	PAF15-07000031
BF50F	REC19300-881-761
BF5A1	REC19300-881-761
BF5A2	REC19300-881-761
BF5A3	REC19300-881-761
BF5A4	REC19300-881-761
BF5AH	REC19300-881-761
BF5AK	REC19300-881-761
BF5AK2	REC19300-881-761
BF5AM	REC19300-881-761
BF5AX	REC19300-881-761
BF5DH	REC19300-881-761
BF60A	PAF15-07000031
BF60AK1	PAF15-07000031
BF6AH	REC19300-881-761
BF6B	REC19300-881-761
BF6BX	REC19300-881-761
BF6D6	PAF15-07000031
BF75A	PAF15-07000031
BF75A1	REC19300-ZV5-043
BF75A2	REC19300-ZV5-043
BF75A3	REC19300-ZV5-043
BF75AT	REC19300-ZV5-043

	REF
BF75AV	REC19300-ZV5-043
BF75AX	REC19300-ZV5-043
BF75B	PAF15-07000031
BF75C	PAF15-07000031
BF75D	PAF15-07000031
BF75D	PAF15-07000031
BF75DK0	REC6E5-12411-30
BF75DK2	PAF15-07000031
BF75DK2	REC6E5-12411-30
BF75DK3	PAF15-07000031
BF75DK3	REC6E5-12411-30
BF75DK4	PAF15-07000031
BF75DK4	REC6E5-12411-30
BF75DK0	PAF15-07000031
BF75E	PAF15-07000031
BF75F	PAF15-07000031
BF75F	REC19300-881-761
BF80A	PAF15-07000031
BF80A	REC6E5-12411-30
BF80AK1	PAF15-07000031
BF80AK1	REC6E5-12411-30
BF8AH	PAF15-07000031
BF8AH	REC19300-881-761
BF8AK	REC19300-881-761
BF8AM	PAF15-07000031
BF8AM	REC19300-881-761
BF8AX	REC19300-881-761
BF8B	REC19300-881-761
BF8B1	PAF15-07000031
BF8B2	PAF15-07000031
BF8BX	REC19300-881-761
BF8C	REC19300-881-761
BF8CX	REC19300-881-761
BF8D1	PAF15-07000031
BF8D2	PAF15-07000031
BF8D3	PAF15-07000031
BF8D4	PAF15-07000031
BF9,9AH	REC19300-881-761
BF9,9AK	REC19300-881-761
BF9,9AM	REC19300-881-761
BF9,9AX	REC19300-881-761

	REF
BF9,9AY	REC19300-881-761
BF9,9B	REC19300-881-761
BF9,9BX	REC19300-881-761
BF9,9D1	PAF15-07000031
BF9,9D2	PAF15-07000031
BF9,9D3	PAF15-07000031
BF9,9DK2	PAF15-07000031
BF90A1	REC19300-ZV5-043
BF90A2	REC19300-ZV5-043
BF90A3	REC19300-ZV5-043
BF90AT	REC19300-ZV5-043
BF90AV	REC19300-ZV5-043
BF90AX	REC19300-ZV5-043
BF90DK2	PAF15-07000031
BF90DK2	REC6E5-12411-30
BF90DK4	PAF15-07000031
BF90DK4	REC6E5-12411-30
BF90DK5	PAF15-07000031
BF90DK0	PAF15-07000031
BF90DK0	REC6E5-12411-30
BF990DK5	REC6E5-12411-30
BFDK2	PAF15-07000031
BFP10B1	PAF15-07000031
BFP10B2	PAF15-07000031
BFP10D1	PAF15-07000031
BFP10D2	PAF15-07000031
BFP60A	PAF15-07000031
BFP60AK1	PAF15-07000031
BFP8B1	PAF15-07000031
BFP8B2	PAF15-07000031
BFP8D2	PAF15-07000031
BFP8D3	PAF15-07000031
BFP9,9D1	PAF15-07000031
BFP9,9D2	PAF15-07000031
BFP9,9D3	PAF15-07000031
BFPD1	PAF15-07000031
BFT100AK1	PAF15-07000031
BFT100AK1	REC6E5-12411-30
BFT80AK1	PAF15-07000031
BFT80AK1	REC6E5-12411-30

IMPULSORES IMPELLERS GIRANTE TURBINES

IMPULSORES

IMPELLER

REF	OEM
REC19210-ZV4-651	19210-ZV4-651

BF8C, CX
BF9,9AM, AX, B, BX
BF15A1, A2, A3, AM, AX, AY, B, B2, BX



REF	OEM
REC47-43026Q02	19210-ZW1-303

BF75
BF90AT



REF	OEM
REC19210-ZY9-H01	19210-ZY9-H01

F75DK3, DK4
BF80A, AK1
BF90DK4, DK5
BF100A, AK1

new



GIRANTE

REF	OEM
REC19210-ZW9-013	19210-ZW9-013 19210-ZW9-003

BF8B1, B2, D1, D2, D3, D4, DK2
BF9,9D1, D2, D3, DK2
BF10B1, B2, D1, D2, D4, DK2
BFP8B1, B2, D1, D2, D3
BFP9,9D1, D2, D3
BFP10B1, B2, D1, D2



REF	OEM
REC19210-ZV4-013	19210-ZV4-013

BF9,9AH, AK, AM
BF15AH, AK, AM



REF	OEM
REC19210-ZV7-003	19210-ZV7-003

BF20A, A2, AX
BF25A, A1, A2, A3, AX, D4, DK2
BF30A, A1, A2, A3, AX, D4, DK2



REF	OEM
REC19210-881-003	19210-881-003 19210-881-A01 19210-881-A02

BF4,5B, B2, B4, B6, BK0, BK2, BX
BF5A1, A2, A3, A4, AH, AK, AK2, AX
BF6B, BZ, D6
BF8AH, AK, AM, AX, B, BX
BF50F
BF75A, B, C, D, E
BF100A, B, C, D, E, F



REF	OEM
REC19210-ZW9-A32	19210-ZW9-A31, 19210-ZW9-A32

BF8B1, B2, D1, D2, D3
BF9,9DK2
BF10D2, D4, DK2
BF15D3, DK2, DK3
BF20D3, DK2, DK3
BFP8B1, B2, D1, D2, D3
BFP9,9D, D1, D2
BFP10B1, B2, D1, D2



REF	OEM
REC19210-ZY3-003	19210-ZY3-003

BF175A3, A6, AK1, AK2, AK3, D
BF200A2, A3, A6, AK1, AK2, AK3, D
BF225A, A2, A, A6, AK1, AK2, D
BF250A, D



REF	OEM
REC19210-ZV5-003	19210-ZV5-003

BF35AM
BF40A, A1, A2, A3, A4, AX, AY, B, B2, BX, D, DK2, DK4, E
BF45AM
BF50A, A1, A2, A3, AX, AY, D, DK2, DK4
BF60A, AK1
BFP60A, AK1



REF	OEM
REC19210-ZW1-B02	19210-ZW1-B02 19210-ZW1-B03 19210-ZW1-B04

BF75A1, A2, A3, AV, AX, DK0, DK2
BF90A1, A2, A3, AV, AX, DK0, DK2
BF115A1, A2, A3, AX, D, DK1
BF130A1, A2, A3, AX
BF135A4, AK2
BF150A4



GUÍA DE IMPULSORES — IMPELLER GUIDE — GUIDA GIRANTE — GUIDE DES TURBINES

	REF	CEF	A (mm)	B (mm)	C (mm)
BF100A, AK1	REC19210-ZY9-H01				
BF100A, B, C, D, E, F	REC19210-881-003				
BF10B1, B2, D1, D2, D4, DK2	REC19210-ZW9-013	CEF500347	13	45,6	14,8
BF10D2, D4, DK2	REC19210-ZW9-A32	CEF500348	16,2	45,6	14,8
BF115A1, A2, A3, AX	REC19210-ZW1-B02	CEF500337	23,35	87,8	31
BF115D, DK1	REC19210-ZW1-B02	CEF500337	23,35	87,8	31
BF130A1, A2, A3, AX	REC19210-ZW1-B02	CEF500337	23,35	87,8	31
BF135A4, AK2	REC19210-ZW1-B02	CEF500337	23,35	87,8	31
BF150A4	REC19210-ZW1-B02	CEF500337	23,35	87,8	31
BF15A1, A2, A3, AM, AX, AY, B, B2, BX	REC19210-ZV4-651	CEF500343	14,1	41	27,55
BF15AH, AK, AM	REC19210-ZV4-013	CEF500328	14,2	41	27,55
BF15D3, DK2, DK3	REC19210-ZW9-A32	CEF500348	16,2	45,6	14,8
BF175A3, A6, AK1, AK2, AK3, D	REC19210-ZY3-003	CEF500391	26	89,75	31,3
BF200A2, A3, A6, AK1, AK2, AK3, D	REC19210-ZY3-003	CEF500391	26	89,75	31,3
BF20A, A2, AX	REC19210-ZV7-003	CEF500339	17,2	55,75	20,2
BF20D3, DK2, DK3	REC19210-ZW9-A32	CEF500348	16,2	45,6	14,8
BF20F	RM19211-ZV0-003		10,5	40	22,5
BF225A, A2, A3, A6, AK1, AK2, D	REC19210-ZY3-003	CEF500391	26	89,75	31,3
BF250A, D	REC19210-ZY3-003	CEF500391	26	89,75	31,3
BF25A, A1, A2, A3, AX, D4, DK2	REC19210-ZV7-003	CEF500339	17,2	55,75	20,2
BF2AH, AK, AM	RM19211-ZV0-003		10,5	40	22,5
BF30A, A1, A2, A3, AX, D4, DK2	REC19210-ZV7-003	CEF500339	17,2	55,75	20,2
BF35AM	REC19210-ZV5-003	CEF500338	17,2	55,9	20,2
BF4,5B, B2, B3, B6, BK0, BK2, BX	REC19210-881-003				
BF40A, A1, A2, A3, A4, AX, AY, B, B2, BX, D, DK2, DK4, E	REC19210-ZV5-003	CEF500338	17,2	55,9	20,2
BF45AM	REC19210-ZV5-003	CEF500338	17,2	55,9	20,2
BF50A, A1, A2, A3, AX, AY, D, DK4	REC19210-ZV5-003	CEF500338	17,2	55,9	20,2
BF50F, A1, A2, A3, A4, AH, AK, AK2, AX	REC19210-881-003				
BF60A, AK1	REC19210-ZV5-003	CEF500338	17,2	55,9	20,2
BF6B, BZ, D6	REC19210-881-003				
BF75	REC47-43026Q02	CEF500301	22,4	89	32,5
BF75A	REC19210-881-003				

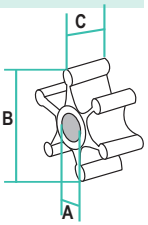

	REF	CEF	A (mm)	B (mm)	C (mm)
BF75A1, A2, A3, AV, AX, DK0, DK2, DK3, DK4	REC19210-ZW1-B02	CEF500337	23,35	87,8	31
BF75B, C, D, E	REC19210-881-003				
BF80A, AK1	REC19210-ZY9-H01				
BF8AH, AK, AM, AX, B	REC19210-881-003				
BF8B1, B2	REC19210-ZW9-013	CEF500347	13	45,6	14,8
BF8B1, B2	REC19210-ZW9-A32	CEF500348	16,2	45,6	14,8
BF8BX	REC19210-881-003				
BF8C, CX	REC19210-ZV4-651	CEF500343	14,1	41	27,55
BF8D1, D2, D3, D4, DK2	REC19210-ZW9-013	CEF500347	13	45,6	14,8
BF8D1, D2, D3	REC19210-ZW9-A32	CEF500348	16,2	45,6	14,8
BF9,9AH, AK, AM	REC19210-ZV4-013	CEF500328	14,2	41	27,55
BF9,9AM, AX, B, BX	REC19210-ZV4-651	CEF500343	14,1	41	27,55
BF9,9D1, D2, D3, DK2	REC19210-ZW9-013	CEF500347	13	45,6	14,8
BF9,9DK2	REC19210-ZW9-A32	CEF500348	16,2	45,6	14,8
BF90A1, A2, A3	REC19210-ZW1-B02	CEF500337	23,35	87,8	31
BF90AT	REC47-43026Q02	CEF500301	22,4	89	32,5
BF90AV, AX, DK0, DK2	REC19210-ZW1-B02	CEF500337	23,35	87,8	31
BF90DK4, DK5	REC19210-ZY9-H01				
BFP10B1, B2, D1, D2	REC19210-ZW9-013	CEF500347	13	45,6	14,8
BFP10B1, B2, D2	REC19210-ZW9-A32	CEF500348	16,2	45,6	14,8
BFP60A, AK1	REC19210-ZV5-003	CEF500338	17,2	55,9	20,2
BFP8B1, B2, D1, D2, D3	REC19210-ZW9-013	CEF500347	13	45,6	14,8
BFP8B1, B2, D1, D2, D3	REC19210-ZW9-A32	CEF500348	16,2	45,6	14,8
BFP9,9D, D1, D2	REC19210-ZW9-A32	CEF500348	16,2	45,6	14,8
BFP9,9D1, D2, D3	REC19210-ZW9-013	CEF500347	13	45,6	14,8
BFPD1	REC19210-ZW9-A32	CEF500348	16,2	45,6	14,8
BFT100AK1	REC19210-ZY9-H01				
BFT80AK1	REC19210-ZY9-H01				

CHAVETA — KEY — CIAVETTA — CLAVETTE

REF	OEM
REC90752-ZV4-650	90752-ZV4-650



BF8C, CX
BF9.9AM, B, AX, BX, AY
BF15AM, B, A1, A2, AX, B2, BX, A3, AY

REF	OEM
REC90752-ZV7-000	90752-ZV7-000



BF25D4, DK2, A, A1, AX, A2, A3
BF30D4, DK2, A, A1, AX, A2, A3
BF20A, AX, A2

REF	OEM
REC90752-ZY3-003	90752-ZY3-003



BF225A2, A3, A6, AK2, AK3
BF175A3, A6, AK1, AK2,AK3
BF200A2, A3, A6, AK1, AK2, AK3
BF250A, AK1

REF	OEM
REC90752-ZW1-B02	90752-ZW1-B02 9075-ZW1-003



BF80A, BF100A
BF150A4, AK2
BF75A1, AV, AX, DK2, DK3, A2, A3
BF90A1, AV, AX, DK0, DK2, DK4, A2, A3
BF115A1, A2, A3, AX, D, DK1
BF130A1, A2, A3, AX
BF135A4, AK2

REF	OEM
REC90752-ZV5-003	90752-ZV5-003



BF60A, AK1
BF50A4, D, DK2, A, A1, A2, AX, A3, AY
BF35AM
BF40B, B2, BX, D, DK2, A, A1, A2, AX, E, A3, AY, A4
BF45AM

BOMBA DE AGUA — WATER PUMP — POMPA ACQUA — POMPE À EAU

JUNTAS BOMBA — WATER PUMP GASKET — GUARNIZIONE POMPA — JOINTS DE POMPE A EAU

REF	OEM
REC8172761	19231-ZW1-003



BF75A
BF90A

REF	OEM
REC19232-881-850	19232-881-850



BF6B, BX, D6
BF8AX, B, BX, AK, AM

REF	OEM
REC19234-881-850	19234-881-850



BF6B, BX, D6
BF8AX, B, BX, AK, AM

REF	OEM
REC27-430472	19242-ZW1-003



BF75A
BF90A

REF	OEM
REC19232-ZV4-610	19232-ZV4-610



BF15AK, AM, B, A1, A2, AX, B2, BX, A1, A2, A3, AY
BF9.9AK, AM, B, AX, BX, AY
BF8C, CX

REF	OEM
REC27-8172771	19232-ZW1-003



BF75A
BF90A

REF	OEM
REC19232-ZV1-A10	19232-ZV1-A10



BF4.5B, BX, BK2, B2, B4, B6, BK0
BF5A1, AM, AX, AK2, A2, A3, A4

REF	OEM
REC19242-ZV5-000	19242-ZV5-000

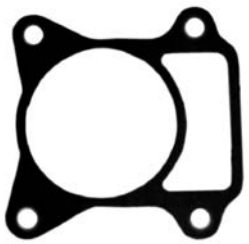

BF20A, AX, A2
BF35AM
BF40B, B2, BX, A4, D, DK2, A,A1, A2, AX, A3, AY
BF45AM
BF25D4, DK2, A, A1, AX, A2, A3
BF50A4, D, DK2, A, A1, A2, A3, AY
BF30D4, DK2, A, A1, AX, A2, A3

REF	OEM
REC27-430331	19234-ZW1-003



BF75A
BF90A

REF	OEM
REC19234-ZY3-000	19234-ZY3-000



BF175A3, A6, AK1, AK2, AK3
BF200A2, A3,A6, AK1, AK2, AK3
BF225A2, A3, A6, AK1, AK2, AK3

REF	OEM
REC19233-ZV5-000	19233-ZV5-000



BF35AM
BF40B, B2, BX, A4, D, DK2, A,A1, 2, AX, AY
BF45AM
BF25D4, DK2, A, A1, AX, A2, A3
BF30D4, K2, A, A1, AX, AZ, A3
BF50A4, D, DK2, A, A1, A2, AX

RETÉN CUERPO DE BOMBA — SEAL WATER PUMP — TENUTE CORPO POMPA — JOINTS SPI DE POMPE À EAU

REF	OEM
REC91252-ZV1-003	91252-ZV1-003

B4.5B, BX, BK2, B4, B6
BF5A1, H, AK, AM, AX, AK2, A2, A3, A4
BF8B1, D1, D2, B2, DK2,D3, D4
BF9.9DK2, D1, D2, D3
BF10B1, D1, D4, DK2, B2, D2
BF50F



REF	OEM
REC91252-935-004	91252-935-004

BF9.9A
BF15A
BF100A, B, C, D, E, F
BF75A, B, C, D, K2, K3, E, F
BF15AH, AK, AM, B, A1, A2, AX, B2, BX, A3, AY
BF9.9AH, AK, AM, B, AX, BX, AY
BF6BX, D6
BF8AX, B, BX, C, CX, AH, AK, AM



KITS DE REPARACIÓN BOMBA DE AGUA — WATER PUMP SERVICE KITS — KIT RICAMBI POMPA ACQUA — KIT POMPE À EAU

REF	OEM
REC06192-ZV1-C00	06192-ZV1-C00 06192-ZV1-000

BF4.5B, BK2, BK0
BF5A1, AM, AX,A AK2, A2, A3,A4



REF	OEM
REC06192-881-C00	06192-881-C00

BF6B, BX, D6
BF8AX, B, BX, AM



REF	OEM
REC06192-ZV4-000	06192-ZV4-000 19210-ZV4-651

BF8C, CX
BF9.9A
BF15A2, A3, B2



REF	OEM
REC06192-ZV7-000	06192-ZV7-000 06192-ZW2-000

BF25D4, DK2, A2, A3
BF30D4, DK2, A2, A3
BF20A2



REF	OEM
REC06192-ZV5-003	06192-ZV5-003

BF35AM
BF40B, B2, BX, A4, D, DK2, A,A1,A2, AX, A3
BF45AM
BF50A4, D, DK2, A, A21, A2, AX,A3



REF	OEM
REC47-43026Q06	19021-ZW1-003

BF75AT
BF90AT



REF	OEM
REC06193-ZV5-020	06193-ZV5-020 06193-ZV5-000 06193-ZV5-010

BF40A4, D, DK2, DK4
BF50A4, D, DK2, DK4

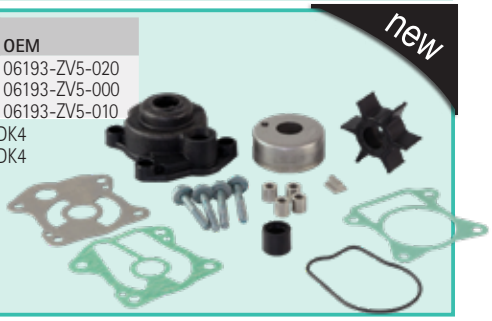

REF	OEM
REC06192-ZW9-A30	06192-ZW9-A30

BFP8D, BF8B2, BF8D2
BFP9.9D (XL)
BF15D
BF20D
BF10D
BFP10D



REF	OEM
REC06192-ZV1-305	06192-ZV1-305 06192-ZW1-305

BF75AT
BF90AT

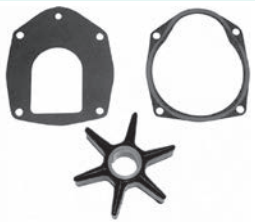

REF	OEM
REC06192-ZV1-000	06192-ZW1-000 06192-ZV1-000

BF115A2, A3
BF130A2, A3
BF75DK0, DK1, A2, A3, DK2
BF90 DK0, DK1, A2, A3, DK2

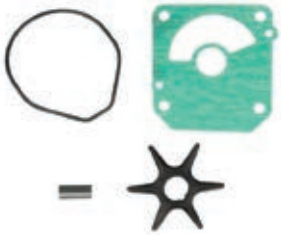

REF	OEM
REC06192-ZY6-000	06192-ZY6-000

BF115D, DK1
BF135A4, AK2
BF150A4, AK2

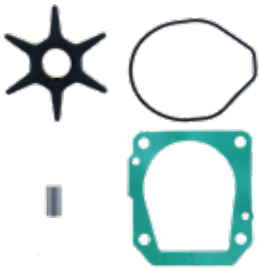

REF	OEM
REC06192-ZY3-000	06192-ZY3-000 06192-ZX2-000

BF175A3, A6, AK1, AK2, AK3
BF200A2, A3, A6, AK1, AK2, AK3
BF225A2, A3, A6, AK1, AK2, AK3
BF250A

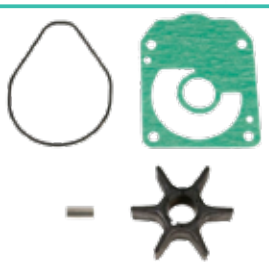

ÁNODO ANODE ANODI ANODE

ZN	(KG)	AL	(KG)	OEM
CM06411-ZV5-000	0,36	CM06411-ZV5-000A	0,14	06411-ZV5-000 06411-ZV5-020

BF35, 40, 45, 50

150 x 35 mm



ZN	(KG)	AL	(KG)	OEM
CM826134	0,25	CM826134A	0,10	41109-ZW1-003 12155-ZV5-000

BF20-->BF250 HP



ZN	(KG)	AL	(KG)	OEM
CM06411-ZW1-000	0,83	CM06411-ZW1-000A	0,33	06411-ZW1-000 06411-ZW1-020

BF75 --> BF225 HP

220 x 50 mm



ZN	(KG)	AL	(KG)	OEM
CM41109-ZW1-B00	0,22	CM41109-ZW1-B00A	0,11	41109-ZW1-B00

BF40-->BF250 HP



ZN	(KG)	AL	(KG)	OEM
CM6E0-45251-11	0,10	CM6E0-45251-11A	0,04	2155-ZV5-000

BF2-->BF250 HP



ZN	(KG)	AL	(KG)	OEM
CM41107-ZW1-B01	0,44	CM41107-ZW1-B01A	0,20	41107ZW1-B01

BF75-->BF130 HP



ZN	(KG)	AL	(KG)	OEM
CM41106-ZW9-09000	0,99	CM41106-ZW9-000A		41106ZW909000 41106-ZW9-000

BF8-->BF50HP



ZN	(KG)	AL	(KG)	OEM
CM31640	0,45	CM31640A	0,21	06412-ZV1-000 411072ZW1003

BF75, 90, 115, 130



ZN	(KG)	AL	(KG)	OEM
CM41107-ZV500	0,29	CM41107-ZV500A	0,11	41107ZV500 06412-ZV5-000

BF20--> BF50HP



ZN	(KG)	AL	(KG)	OEM
CM664-45371-01	0,27	CM664-45371-01A	0,10	064-45371-01

BF20--> BF50HP



KITS DE ÁNODOS ANODES KIT KIT ANODI KIT ANODES

AL	MG	
CMHBF4050KITA	CMHBF4050KITM	BF40 --> BF50
CMHBF35225KITA	CMHBF35225KITM	BF35 --> BF225
CMHBF75115KITA	CMHBF75115KITM	BF90 --> BF115

new



ÁNODO ANODE ANODI ANODE

ZN	OEM	(KG)
TEN01404	06411-ZV5-000 06411-ZV5-020	0,380

BF35-->BF50 HP



ZN	OEM	(KG)
TEN01401	41106-935-812	0,080

Serie 8 /25HP



ZN	OEM	(KG)
TEN01406	06411-ZV1-000	0,860

BF75-->BF225 HP



ZN	OEM	(KG)
TEN01402	41106-ZV4-650	0,090

BF2-->BF15 HP



ZN	OEM	(KG)
TEN01405	06411-ZV1-000	0,250

Serie 75 - 130 HP



ZN	OEM	(KG)
TEN01400	41106-ZW-000	0,020

Serie 8 /25HP



ZN	OEM	(KG)
TEN01407	41109-ZW1-B00	0,230

BF40-->BF250 HP



ZN	OEM	(KG)
TEN01412	06412-ZV5-000	0,210



ZN	OEM	(KG)
TEN01408	12155-ZV4-A00	0,040

BF8->BF250 HP



ZN	OEM	(KG)
TEN01403	41107-ZV5-000	0,280

BF20-->BF50 HP



ZN	OEM	(KG)
TEN01408/1	12155-ZV5-000	0,030

BF20-->BF250 HP



ZN	OEM	(KG)
TEN01410	41107-ZW1-B01ZA	0,550

Serie 75 - 90 - 115 - 130 HP



ZN	OEM	(KG)
TEN01409	41106-ZW9-000	0,050

BF8-->BF50 HP



ZN	OEM	(KG)
TEN01411	41107-ZV1-003-ZA	0,480

BF75-->BF130 HP



KITS DE ÁNODOS ANODES KIT KIT ANODI KIT ANODES

ZN	
TENKITHONDABF	TEN01410 x 1 TEN01406 x 1 TEN01407 x 2

BF75+



JUNTAS DE MOTOR ENGINE GASKET GUARNIZIONI DE MOTORE JOINTS DE MOTEUR

JUNTAS DE CULATA CYLINDER HEAD GASKET GUARNIZIONE DE TESTATA JOINTS DE CULASSE

REF	OEM
REC12251-ZV7-004	12251-ZV7-004

BF20A, A2, AX
BF25A, A1, 2, A3, AX
BF30A, A1, A2, A3, AX
VF25A2



REF	OEM
REC12251-ZW1-014	12251-ZW1-014 12251-ZW1-004

BF40A4, D, K2, DK4
BF50A4, ,BF50D, DK2, DK4

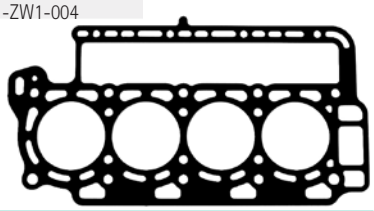

REF	OEM
REC12251-ZV5-003	12251-ZW4-H01 12251-ZV5-000/03

BF35AM
BF40B, BX, A, A1, AX, AY, A4, D, DK2, DK4
BF45AM
BF50A, A1, A4, AX, AY, D, DK2, DK4

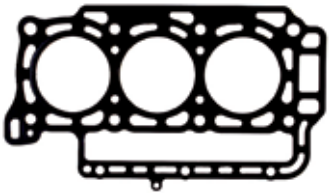

REF	OEM
REC12251-ZW5-023	12251-ZW5-023 12251-ZW5-000/013

BF115A1, A2, A3, AX
BF130A1, A2, A3, AX

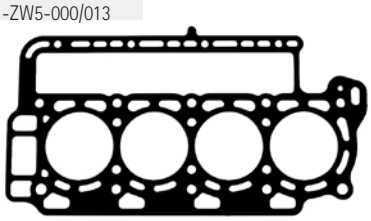

JUNTAS BASE DE MOTOR CYLINDER GASKET GUARNIZIONE BASE MOTORE JOINTS DE TÊTE MOTRICE

REF	OEM
REC23172-ZW1-013	23172-ZW1-013

BF75A1, A2, A3
BF90A1, A2,A3

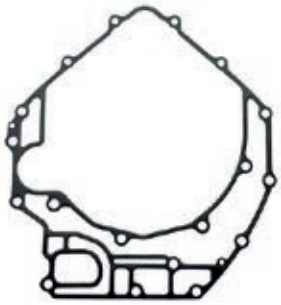

REF	OEM
REC23172-ZW5-013	23172-ZW5-013 23172-ZW5-000

BF115A1, A2, A3, AX
BF130A1, A2, A3, AX

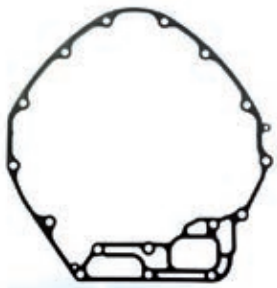

JUNTAS BOMBA ACEITE GASKET, OIL PUMP GUARNIZIONE POMPA OLIO JOINTS DE POMPE A HUILE

REF	OEM
REC15112-ZW5-003	15112-ZW5-003

BF115A1, A2, A3, AX
BF130A1, A2, A3, AX

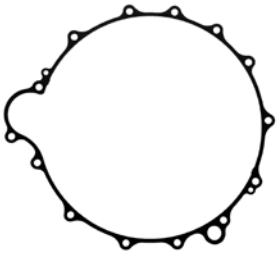

JUNTAS SILENCIOSO GASKET, MUFFLER GUARNIZIONE SILENZIATORE JOINTS DE SILENCIEU

REF	OEM
REC17384-ZW4-000	17384-ZW4-000

BF25D4, DK2, A4
BF30D4, DK2, A4

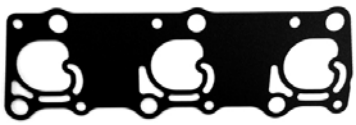

KIT DE JUNTAS — GASKET KIT — KIT GUARNIZIONE — KIT JOINTS

REF	OEM
RM061A1-ZV0-000	061A1-ZV0-000

BF20F



REF	OEM
RM06111-ZW1-020	06111-ZW1-000 06111-ZW1-020

BF75A1, AT, AV, AX
BF90, A1, AT, AV, AX



JUNTA TAPÓN DE DRENAJE — O-RING DRAIN CAP — GUARNIZIONE TAPPO DRENAGIO — JOINT DE VIDANGE

REF	OEM
REC12-191833	12-191833



CORREAS DE DISTRIBUCIÓN — TIMIMG BELT — CINGHIE DISTRIBUZIONE — COURROIES DE DISTRIBUTION

REF	OEM
RM14400-921-024	14400-921-024 14400-921-010

F8AX, B, BX, AH, AK, AM
BF6BX, D6
BF75A, B, C, D, K2, K3, E, F
BF100A, B, C, D, E, F



REF	OEM
RM14400-ZV4-004	14400-ZV4-004

BF8C, CX
BF9.9AH, AK, AM, B, AX, BX, AY
BF15AH, AK, AM, B, A1, A2, AX, B2, A3, AY



REF	OEM
REC14400-ZV5-014	14400-ZV5-004 14400-ZV5-014

BF35AM
BF40B, B2, BX, A, A1, A2, AX, AY
BF45AM
BF50A, A1, A2, AX, AY

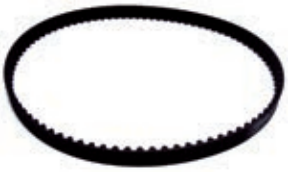

new

REF	OEM
REC14400-ZZ3-004	14400-ZZ3-004

BF60A, AK1
BFP60AK1
BF40E



REF	OEM
RM14400-ZW1-004	14400-ZW1-004

BF75A1, AT, AV,AX,A2, A3
BF90A1, AT, AV, AX, A2, A3



SISTEMA DE ESCAPE Y ADMISIÓN
EXHAUST & INTAKE SYSTEM
SISTEMA DI SCARICO E ASPIRAZIONE
SYSTÈME D'ECHAPPEMENT ET D'ADMISSION

SISTEMA DE ESCAPE — EXHAUST SYSTEM — SISTEMA SCARICO — SYSTÈME D'ECHAPPEMENT

RETÉN VÁLVULA — VALVE SEALS — TENUTE — JOINT DE SOUPAPE

REF	OEM
REC12209-6B4-681	12209-GB4-681

BF8B1, B2, D1, D2, DK2, D3, D4
BF9.9DK2, D1, D2, D3
BF10B1, D1, D4, DK2, D2



SISTEMA DE ADMISIÓN — INTAKE SYSTEM — SISTEMA ASPIRAZIONE — SYSTÈME D'ADMISSION

RETÉN VÁLVULA — VALVE SEALS — TENUTE — JOINT DE SOUPAPE

REF	OEM
REC12209-6B4-681	12209-GB4-681

BF8B1, B2, D1, D2, DK2, D3, D4
BF9.9DK2, D1, D2, D3
BF10B1, D1, D4, DK2, D2



JUNTAS — GASKET, — GUARNIZIONE — JOINT

REF	OEM
REC16221-ZW9-000	16221-ZW9-000

BF8B1, B2, D1, D2, DK2, D3, D4
BF9.9DK2, D1, D2, D3
BF10B1, D1, D4, DK2, B2, D2



REF	OEM
REC16201-881-850	16201-881-850

BF6B, BX, D6
BF8AX, B, BX, AK, AM



REF	OEM
REC16221-ZV4-610	16221-ZV4-610

BF15AK, AM, B, A1, A2, AX, B2, BX, A3, A4
BF9.9AK, AM, B, AX,BX, AY
BF8C, CX



REF	OEM
REC16221-ZW1-000	16221-ZW1-000

BF75A1, AT, AV, AX, A2, A3
BF90A1, AT, AV, AX, A2, A3



REF	OEM
REC17105-ZY3-004	17105-ZY3-004

BF250A
BF175A3, A6, AK1, AK2, AK3
BF200A2, A3, A6, AK1, AK2, AK3
BF225A2, A3, A6, AK1, AK2, AK3

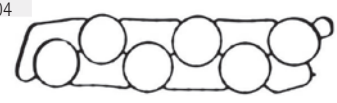

REF	OEM
REC17109-ZY6-000	17109-ZY6-000

BF115D, DK1
BF135A4, AK2
BF150A4, AK2
BF75DK0, DK2, DK3
BF90DK0, DK2,DK4
BF100A
BF80A



REF	OEM
REC17105-ZY6-000	17105-ZY6-000

BF115D, DK1
BF135A4, AK2
BF150A4, AK2



REF	OEM
REC17109-ZY3-004	17109-ZY3-004

BF250A
BF175A3, A6, AK1, AK2, AK3
BF200A2, A3, A6, AK1, AK2, AK3
BF225A2, A3, A6,AK1, AK2, AK3



REF	OEM
REC17151-ZW5-000	17151-ZW5-000

BF115A1, A2, A3, AX
BF130A1, A2, A3, AX



DESPIECE COLAS GEAR CASE PARTS PARTI PIEDI PIECES D'EMBASES

BF25 --> BF50

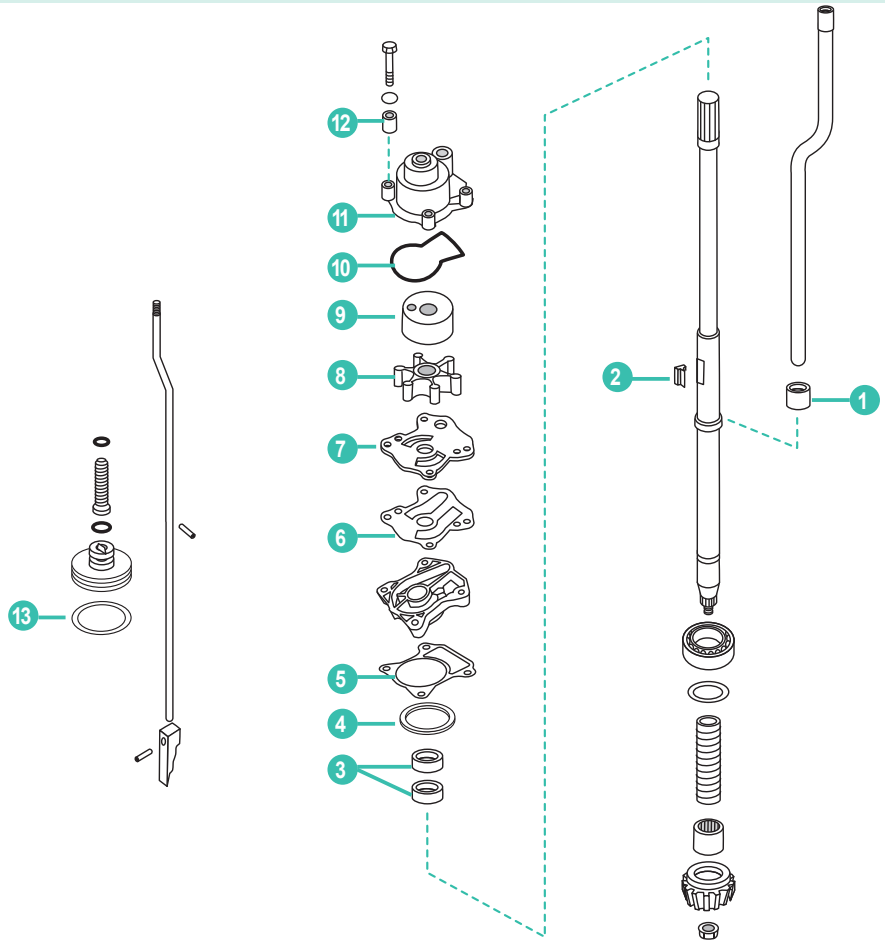

	REF	OEM				
1	REC19253-ZV5-000	19253-ZV5-000	RETEN	SEAL	TENUTA	JOINT SPI
2	REC90752-ZV5-003	90752-ZV5-003	CHAVETA	KEY	CHIUSURA	CLAVETTE
3	REC91251-ZV5-003	91251-ZV5-003	RETEN	SEAL	TENUTA	JOINT SPI
4	REC91351-740-003	91351-740-003	TORICA	O-RING	O-RING	JOINT TORIQUE
5	REC19242-ZV5-000	19242-ZV5-000	JUNTA DE LA BOMBA	GASKET PUMPCASE	GUARNIZIONE POMPA	JOINT DE POMPE
6	REC19233-ZV5-000	19233-ZV5-000	JUNTA	GASKET	GUARNIZIONE	JOINT
7	REC19231-ZV5-000	19231-ZV5-000	PLACA	PLATE	PIASTRA	PLAQUE
8	REC19210-ZV5-003	19210-ZV5-003	IMPULSOR	IMPELLER	GIRANTE	TURBINE
9	REC19223-ZV5-000	19223-ZV5-000	TAPA DE LA BOMBA	COVER, INNER WATER PUMP	COPERCHIO POMPA ACQA	INSERT DE POMPE À EAU
10	REC91356-ZV5-000	91356-ZV5-000	TORICA	O-RING	O-RING	JOINT TORIQUE
11	REC19221-ZV5-000	19221-ZV5-000	CUERPO DE LA BOMBA	HOUSING, WATER PUMP	CORPO POMPA	CORS DE POMPE À EAU
12	REC91555-ZV5-000	91555-ZV5-00	PASADOR	PIN	SPINOTTO	PIN
13	REC91353-ZV5-003	91353-ZV5-003	TORICA	O-RING	O-RING	JOINT TORIQUE

BF75AT • BF90AT

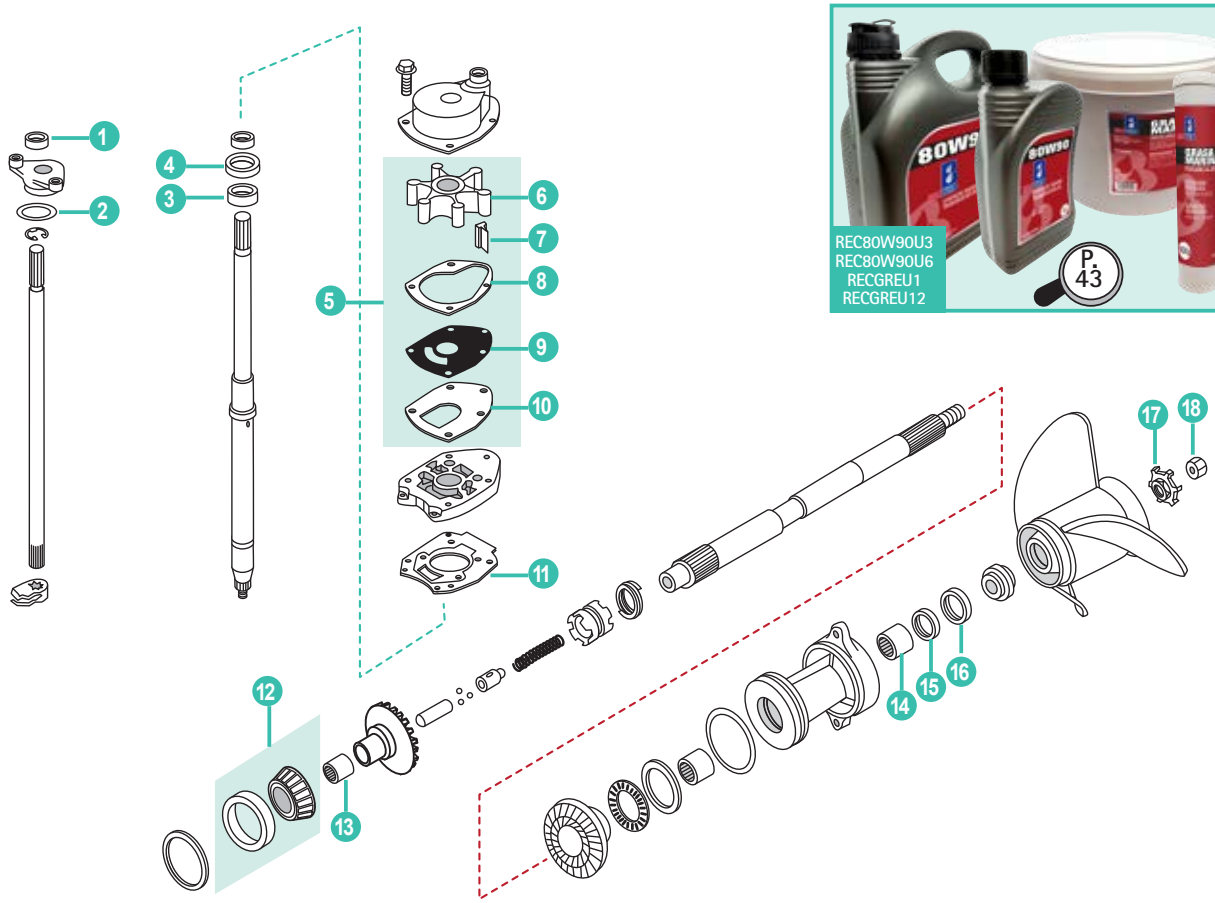

	REF	OEM				
1	REC26-8164641	91253-ZW1-003	RETÉN ACEITE	OIL SEAL	PARAOLIO	JOINT SPI
2	REC25-457101	91353-ZW1-003	TORICA	O-RING	O-RING	JOINT TORIQUE
3	REC26-43036	91254-ZW1-003	RETÉN ACEITE	OIL SEAL	PARAOLIO	JOINT SPI
4	REC26-43035	91251-ZW1-003	RETÉN ACEITE	OIL SEAL	PARAOLIO	JOINT SPI
5	REC47-43026Q06	19021-ZW1-003	KIT BOMBA AGUA	WATER PUMP KIT	KIT POMPA ACQUA	KIT POMPE À EAU
6	REC47-43026Q02	19120-ZW1-303	IMPULSOR	IMPELLER	GIRANTE	TURBINE
7	REC90752-ZW1-B02	90752-ZW1-003	CHAVETA IMPELLER	KEY	CHIUSURA	CLAVETTE TURBINE
8	REC27-8172771	19232-ZW1-003	JUNTA DE LA BOMBA	GASKET PUMPCASE	GUARNIZIONE POMPA	JOINT DE POMPE
9	REC8172761	19231-ZW1-003	BASE INOX	OUTER PLATE	PIASTRA INOX	BASE INOX
10	REC27-430331	19234-ZW1-003	JUNTA DE LA BOMBA	GASKET PUMPCASE	GUARNIZIONE POMPA	JOINT DE POMPE
11	REC27-430472	19242-ZW1-003	JUNTA	GASKET	GUARNIZIONE	JOINT
12	REC31-30894A1	91051-ZW1-003	RODAMIENTO AVAN.	BEARING FORWARD	CUSCINETTO AVANTI	ROULEMENT MARCHE AVANTE
13	REC31-30895T	91057-ZW1-003	RODAMIENTO	BEARING	CUSCINETTO	ROULEMENT
14	REC387247	91053-ZW1-003	RODAMIENTO AGUJAS	NEEDLE BEARING	CUSCINETTO ASSE	ROULEMENT A AIGUILLE
15	REC26-76868	91252-ZW1-003	RETEN	SEAL	TENUTA	JOINT SPI
16	REC26-70081	91351-ZW1-003	RETEN	SEAL	TENUTA	JOINT SPI
17	REC90508-ZW1-003	90508-ZW1-003	ARANDELA SEGURIDAD	WASHER TAB	RONDELLA	RONDELLE FREIN
18	REC90301-ZW1-003	90301-ZW1-003	TUERCA HELICE	NUT PROPELLER	DADO ELICHE	ÉCROU

COMPONENTES DE COLA | DRIVE COMPONENTS | COMPONENTI PIEDI | PIECES D' EMBASES

KITS JUNTAS Y RETENES | SEALS KITS | KIT GUARNIZIONE E TENUTE | KITS JOINTS D'EMBASE

REF	OEM
REC18-8362-1	

Series 14ZV50M
BF35/45 AM BF40/50 A, AW, AX

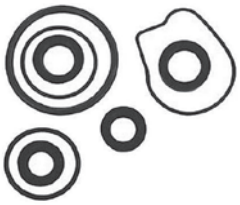

REF	OEM
REC18-8363	

BF9.9
BF15



REF	OEM
REC18-8365	

BF115
BF130

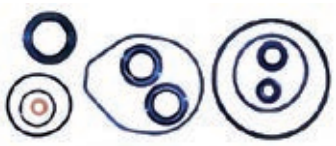

REF	OEM
REC18-8366	

BF75
BF90

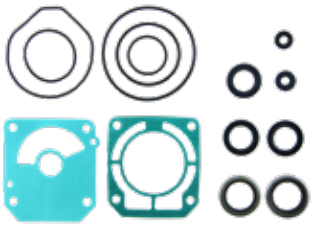

RETENES EJE DE TRASMISIÓN | SEALS DRIVE SHAFT | TENUTE ASSE DI TRASMISSIONE | JOINTS SPI ARBRE DE TRANSMISSION

REF	OEM
REC26-43036	91254-ZW1-003

BF75AT
BF90AT



REF	OEM
REC26-43035	91251-ZW1-003

BF75AT
BF90AT



RETENES EJE DE HÉLICE | SEALS PROPELLER SHAFT | TENUTE ASSE ELICA | JOINTS SPI ARBRE D'HÉLICE

REF	OEM
REC26-76868	91252-ZW1-003

BF75AT
BF90AT



REF	OEM
REC26-70081	91255-ZW1-003 91351-ZW1-003

BF75AT
BF90AT



RETENES EJE DE CAMBIO | SEALS SHIFT SHAFT | TENUTE ASSE DI CAMBIO | JOINTS SPI ARBRE DE CHANGEMENT

REF	OEM
REC26-8164641	91253-ZW1-003

BF75AT
BF90AT



JUNTA EJE SELECTOR | O-RING DRIVE SHAFT | GUARNIZIONE ASSE TRASMISSIONE | JOINTS D'ARBRE DE SELECTEUR

REF	OEM
REC25-457101	91353-ZW1-003

DF75AT
DF90AT



TUERCA DIÁBOLO | NUT, GEARCASE END | DADO DIAVOLO | ECROU DE DIABOLO

REF	OEM
REC41109-ZV5-000	41109-ZV5-000

BF35AM
BF40B, B2, BX, A4, A/ A1, A2, AX, A3, AY
BF45AM
BF50A4, A/ A1, A2,AX, A3, AY



EJE HÉLICE | PROPELLER SHAFT | ASSE ELICA | ARBRE D'HELICE

REF	OEM
REC41161-ZV5-000	41161-ZV5-000

BF35AM
BF40B, B2, BX, A4, A/ A1, A2, AX, A3, AY
BF45AM
BF50A4, A/ A1, A2,AX, A3, AY



RODAMIENTO PIÑÓN AVANTE | FORWARD GEAR BEARING | CUSCINETTO PIGNONE AVANTI | ROULEMENT DE PIGNON AVANT

REF	OEM
REC31-30894A1	91051-ZW1-003

BF75AT
BT90AT



REF	OEM
REC31-30895T	91057-ZW1-003

BF75AT
BT90AT



RODAMIENTO DIÁBOLO | CARRIER BEARING | CUSCINETTO DIAVOLO | ROULEMENT DE DIABOLO

REF	OEM
REC387247	91053-ZW1-003

BF75AT
BF90AT



ARANDELA DE CIERRE | TAB WASHER | RONDELLA CHIUSURA | RONDELLE FREIN

REF	OEM
REC90508-ZW1-003	90508-ZW1-003

BF75AT
BF90AT



SISTEMA DE PROPULSIÓN
PROPULSION SYSTEM
SISTEMA DI PROPULSIONE
SYSTEME DE PROPULSION

HÉLICES ALUMINIO E INOXIDABLE DE 3 Y 4 PALAS
3 & 4 BLADE ALUMINIUM & SS PROPELLERS
ELICHE ALLUMINIO E INOX DA 3 E 4 PALE
HELICE ALUMINIUM ET INOX 3 ET 4 PALES

CÓDIGO DE REFERENCIAS — PART NO. CODING SYSTEM — SISTEMA DI CODICE — CODAGE DES REFERENCES

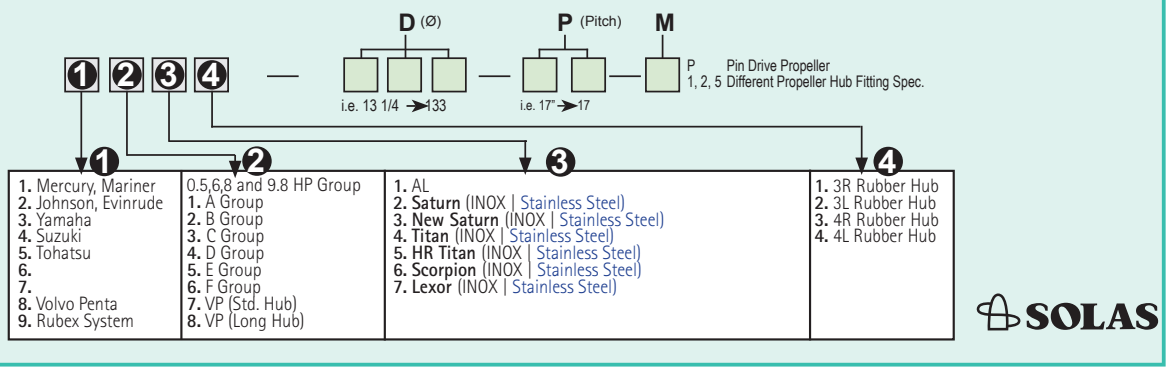

SOLAS

AMITA 3

SOLAS

Hélice de aluminio con núcleo de goma de gran resistencia.

Aluminum propeller with heavy duty rubber hub.

Eliche di alluminio con mozzi in gomma ad alta resistenza.

Hélice en aluminium avec moyeu en caoutchouc



AMITA 4

SOLAS

Hélices de aluminio con núcleo de goma de gran resistencia. Van muy suaves a poca velocidad y hace el barco muy manejable con la mar picada.

Aluminum propeller with heavy duty rubber hub. Smoother low speed makes the offshore boating activity much easier.

Eliche di alluminio con mozzo in gomma ad alta resistenza. Molto morbido a bassa velocità e rende la barca molto maneggevole con mare cattivo.

Hélice en aluminium avec moyeu en caoutchouc. Permet d'aller doucement à basse vitesse et rende le bateau très maniable lorsque la mer est agitée



TITAN

SOLAS

Hélices de acero inox. Diseño de pala grande para un área más grande. Gran capacidad de transporte de carga. Excelente economía de combustible.

Stainles steel propeller. High camber blade and large blade area design. Great load carrying capability. Excellent fuel economy.

Eliche in acciaio inossidabile. Ampia capacità di carico. Eccellente riduzione consumo del carburante.

Hélice en acier inoxy. Lame à carrossage élevé et conception à grande surface de lame. Grande capacité de charge. Excellente économie de carburant.



NEW SATURN

SOLAS

Hélices de acero inoxidable. Ofrece buena aceleración y rendimiento. Tamaño más pequeño que ofrece un diámetro extragrande.

Stainless steel propeller. Offers good acceleration & all-round performance. Smaller pitch sizes offered in extra large diameter with increased blade area.

Eliche di acciaio inox. Buona accelerazione. Piccole dimensione che offre un più grande diametro.

Hélice inox, offrant de bonnes accélérations et performances. Taille de pas reduite pour les modèles de grands diamètres avec une surface de pale plus importante.



HR TITAN 3 PROP

SOLAS

Hélice de acero inoxidable. Alto rendimiento para cascos de alta velocidad.
La inclinación de la hoja proporciona un excelente elevación de proa y aceleración.
El diseño de copa grande aumenta la mordida y reduce el deslizamiento.

Stainless steel propeller. Performance prop for high speed planning hulls. High rake blade design provides excellent bow lift and acceleration. Heavy cup design increases bite and reduces slip.

Eliche in acciaio inox. Alte prestazioni per scafi ad alta velocità. Il passo della pala fornisce un'eccellente spinta e accelerazione. Il disegno aumenta le prestazioni.

Hélice en acier inoxydable. Hélice de performance pour les coques de planification à grande vitesse. La conception de la lame à haut râteau offre une excellente portance et accélération de l'arc. La conception lourde de la tasse augmente la morsure et réduit le glissement.



GUÍA DE HÉLICES CON NÚCLEO INTEGRADO — PROPELLERS APPLICATION WITH RUBBER HUB — GUIDA ELICHE CON MOZZO — GUIDE DES HELICES ET MOYEUX

	R.O. OEM	A	B	D	P	R		AL AMITA 3	AL AMITA 4	INOX STAINLESS STEEL NEW SATURN	INOX TITAN	INOX HR TITAN 3
BF2 Series	58130-ZV0-841ZB		3	7 1/4	6	R	Plastic	SOL6001-073-06P				
BF4 BF5			3	7 7/8	6 3/4	R		SOL6011-079-06P				
					7 1/2			SOL6011-079-07P				
8 (2001+) 9.9 (1988+) 15 (1988+) 20 (2003+)				9 1/4	7			SOL3111-093-07				
	58130-ZV4-703ZB			9 1/2	8 5/8			SOL3111-093-08				
	58130-ZV4-030ZB	8	3	9 1/2	9 1/2	R		SOL3111-093-09				
				9 1/4	10			SOL3111-093-10				
				9 1/4	11			SOL3111-093-11				
25 30	58130-ZV7-850ZA			9 3/4	9 7/8			SOL5211-099-09				
								SOL5211-099-10				
	58130-ZV7-000ZA	10	3	9 1/4	12	R		SOL5211-099-11				
								SOL5211-099-12				
								SOL5211-099-13				
35 (1991+) 40 (1995+) 45 (1991-94) BF40EFI BF50EFI BF60EFI 50 (1995+)	58130-ZV5-860ZA			11 3/4	10			SOL3311-121-09				
								SOL3311-116-11				
	58130-ZV5-850ZA			11 1/2	12			SOL3311-114-12				
	58130-ZV5-000ZA			11 1/4	13			SOL3311-111-13				
	58130-ZV5-870ZA	13	3	11 1/2	14	R		SOL3311-111-14				
								SOL3311-110-15				
				11	16			SOL3311-110-16				
				11	17			SOL3311-110-17				
75 (1995+) 90 (1995+) 115 (1998-09) 130 (1998-09) BFP60A	58130-ZW1-W01ZA			14	11	R		SOL6411-140-11		SOL6431-140-11		
	58130-ZW1-W11ZA			13.75-13.25	13	R		SOL6411-138-13	SOL6413-133-13	SOL6431-138-13		
				13.5	14	R		SOL6411-135-14				
				13.5-13	15	R		SOL6411-135-15	SOL6413-130-15	SOL6431-135-15		
	58130-ZW1-W31ZA			13.5	15	L		SOL6412-135-15				
				13.25-12.75	17	R		SOL6411-133-17	SOL6413-128-17	SOL6431-133-17		
	58130-ZW1-W61ZA			13.25	17	L		SOL6412-133-17				
	58130-ZW1-W41ZA	15	3	13-12.5	19	R		SOL6411-130-19	SOL6413-125-19	SOL6431-130-19		
				13-12.5	21	R		SOL6411-130-21	SOL6413-125-21	SOL6431-130-21		
	08M60-ZW7-A40			14 1/2	15	R				SOL1531-145-15		
				14 1/4	17	R				SOL1531-143-17		
	08M60-ZW7-A00			14	19	R				SOL1531-140-19		
	08M60-ZW7-A10			14	21	R				SOL1531-140-21		
	08M60-ZW7-A20			14	23	R				SOL1531-140-23		
	08M60-ZW7-A30			14	25	R				SOL1531-140-25		
115 (2010+) 130 (2010+) 135 (2004+) 150 (2004+) 200 (2002+) 225 (2002+) 250 (2012+)				15-14.75	15	R		SOL1511-150-15	SOL1513-148-15			
				15	15	L		SOL1512-150-15		SOL1532-145-15		
				14.8-14.5	17	R		SOL1511-148-17	SOL1513-145-17			
				14.8	17	L		SOL1512-148-17		SOL1532-143-17		
				14.5-14.25	19	R		SOL1511-145-19	SOL1513-143-19			
				14.5	19	L		SOL1512-145-19		SOL1532-140-19		
				14	21	R			SOL1513-140-21			
				14	23	R			SOL1513-140-23			
				14.3	21	R		SOL1511-143-21				
				14.3	21	L		SOL1512-143-21		SOL1532-140-21		
				14.2	23	R		SOL1511-142-23				
		15	3	14.2	23	L		SOL1512-142-23		SOL1532-140-23		
				15 1/2-15 3/4	15	R						SOL1571-158-15
				15 1/2-15 3/4	15	L					SOL1542-155-15	SOL1572-158-15
				15 1/4-15 1/2	17	R						SOL1571-155-17
				15 1/4-15 1/2	17	L						SOL1572-155-17
				15-15 1/4	19	R						SOL1571-153-19
				15-15 1/4	19	L					SOL1542-150-19	SOL1572-153-19
				14 3/4-15	21	R						SOL1571-150-21
				14 3/4-15	21	L						SOL1572-150-21
				14 1/2-14 3/4	23	R						SOL1571-148-23
				14 1/2-14 3/4	23	L						SOL1572-148-23
				14 1/2	25	R						SOL1571-145-25

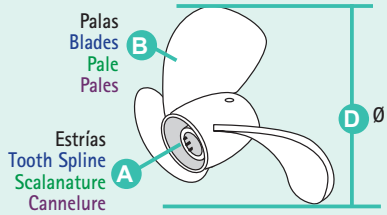

P Paso
Pitch
Passo
Pas

R Rotación L (izquierda) R (derecha)
Rotation L (left) R (Right)
Rotazione L (SX) R (DX)
Rotation L (gauche) R (droit)

NÚCLEO INTERCAMBIABLE — INTERCHANGEABLE HUB — MOZZO INTERCAMBIABILE — MOYEU INTERCHANGEABLE

	A	REF	
BF 35/45 (1991-94) BF 40/50/50A (1995+)	13	SOLRBX-113	C
75-90 HP (1995-98)	13	SOLRBX-102	D
75-90 HP (1999+) 115-130HP (1998+)	13	SOLRBX-107	D
115-130HP (1998+)	15	SOLRBX-107	D
BF135, 150, 200, 225HP (2003+) BF250	15	SOLRBX-107	E



HÉLICES PARA NÚCLEO INTERCAMBIABLE — PROPELLERS FOR INTERCHANGEABLE HUB — ELICHE PER MOZZO INTERCAMBIABILE — HELICES AVEC MOYEU INTERCHANGEABLE

	B	D	P	R	AL
C 30-75 HP	3	12.1	9	R	SOL9311-121-09
		12	10	R	SOL9311-120-10
		11.6	11	R	SOL9311-116-11
		11.4	12	R	SOL9311-114-12
		11.1	13	R	SOL9311-111-13
		11.1	14	R	SOL9311-111-14
		11	15	R	SOL9311-110-15
D 40-140 HP	3	14	9	R	SOL9411-140-09
		14	11	R	SOL9411-140-11
		13.75	13	R	SOL9411-138-13
		13.50	15	R	SOL9411-135-15
		13.25	17	R	SOL9411-133-17
		13.2	19	R	SOL9411-132-19
		13.2	21	R	SOL9411-132-21
E 135-350 HP	3	15.5	11	R	SOL9511-155-11
		15.3	13	R	SOL9511-153-13
		16	13	R	SOL9511-160-13
		15	15	R	SOL9511-150-15
		15	15	L	SOL9512-150-15
		14.8	17	R	SOL9511-148-17
		14.8	17	L	SOL9512-148-17
		14.5	19	R	SOL9511-145-19
		14.5	19	L	SOL9512-145-19
		14.3	21	R	SOL9511-143-21
		14.3	21	L	SOL9512-143-21





Núcleo intercambiable (no incluido).
Interchangeable hub (not included).
Mozzo intercambiabile (non incluso).
Moyeu interchangeable (non inclus)

	B	D	P	R	INOX STAINLESS STEEL
C 30-75 HP	3	11 5/8	11	R	SOL9331-116-11
		11 3/8	12	R	SOL9331-114-12
		11 1/8	13	R	SOL9331-111-13
		11 1/8	14	R	SOL9331-111-14
		11	15	R	SOL9331-110-15
D 40-140 HP	3	13 3/4	13	R	SOL9431-138-13
		13 3/4	13	L	SOL9432-138-13
		13 1/2	15	R	SOL9431-135-15
		13 1/2	15	L	SOL9432-135-15
		13 1/4	17	R	SOL9431-133-17
		13 1/4	17	L	SOL9432-133-17
		13	19	R	SOL9431-130-19
		13	19	L	SOL9432-130-19
		13	21	R	SOL9431-130-21
E 90-140 HP	3	14 1/2	15	R	SOL9531-145-15
		14 1/2	15	L	SOL9532-145-15
		14 1/4	17	R	SOL9531-143-17
		14 1/4	17	L	SOL9532-143-17
		14	19	R	SOL9531-140-19
		14	19	L	SOL9532-140-19
		14	21	R	SOL9531-140-21
		14	21	L	SOL9532-140-21
		14	23	R	SOL9531-140-23
		14	23	L	SOL9532-140-23
E 135-350 HP	3	15 3/4	15	R	SOL9571-158-15
		15 3/4	15	L	SOL9572-158-15
		15 1/2	17	R	SOL9571-155-17
		15 1/2	17	L	SOL9572-155-17
		15 1/4	19	R	SOL9571-153-19
		15 1/4	19	L	SOL9572-153-19
		15	21	R	SOL9571-150-21
		15	21	L	SOL9572-150-21
		14 3/4	23	R	SOL9571-148-23
		14 3/4	23	L	SOL9572-148-23
		14 1/2	25	R	SOL9571-145-25
		14 1/2	25	L	SOL9572-145-25



REF --> RO / OEM

REF	R.O. / OEM	
C		
CEF500301	19210-ZW1-303	568
CEF500328	19210-ZV4-013	568
CEF500337	19210-ZW1-B04	568
CEF500338	19210-ZV5-003	568
CEF500339	19210-ZV7-003	568
CEF500343	19210-ZV4-651	568
CEF500347	19210-ZW9-013	568
CEF500348	19210-ZW9-A32	568
CEF500391	19210-ZY3-003	568
CM06411-ZV5-000	06411-ZV5-000	571
CM06411-ZV5-000	06411-ZV5-020	571
CM06411-ZV5-000A	06411-ZV5-000	571
CM06411-ZV5-000A	06411-ZV5-020	571
CM06411-ZW1-000	06411-ZW1-000	571
CM06411-ZW1-000	06411-ZW1-020	571
CM06411-ZW1-000A	06411-ZW1-000	571
CM06411-ZW1-000A	06411-ZW1-020	571
CM31640	06412-ZV1-000	571
CM31640	411072ZW1003	571
CM31640A	06412-ZV1-000	571
CM31640A	411072ZW1003	571
CM41106-ZW9-000A	41106-ZW9-000	572
CM41106-ZW9-000A	41106ZW909000	572
CM41106-ZW9-09000	41106-ZW9-000	571
CM41106-ZW9-09000	41106ZW909000	571
CM41106-ZW9-09000	41106-ZW9-090	545
CM41107-ZV500	06412-ZV5-000	571
CM41107-ZV500	41107ZV500	571
CM41107-ZV500A	06412-ZV5-000	572
CM41107-ZV500A	41107ZV500	572
CM41107-ZV500A	41107-ZV5-000	545
CM41107-ZW1-B01	41107ZW1-B01	571
CM41107-ZW1-B01A	41107ZW1-B01	571
CM41109-ZW1-B00	41109-ZW1-B00	571
CM41109-ZW1-B00A	41109-ZW1-B00	571
CM664-45371-01	06412-ZV5-000	571
CM664-45371-01A	06412-ZV5-000	571
CM6E0-45251-11	2155-ZV5-000	571
CM6E0-45251-11A	2155-ZV5-000	571
CM826134	12155-ZV5-000	571
CM826134	41109-ZW1-003	571
CM826134A	12155-ZV5-000	571
CM826134A	41109-ZW1-003	571
CMHBF35225KITA		546-571
CMHBF35225KITM		571
CMHBF4050KITA		545-546-571
CMHBF4050KITM		571
CMHBF75115KITA		546-571
CMHBF75115KITM		571
CHACJ14		559
CHAP10Y		559
CHAP8Y		559
CHAPROSU		559
CHARA6HC		559
CHARA8HC		559
CHARC9MC4		559
CHARN11YC4		559
G		
GS11290		561
GS11291		561
GS11292		561
GS11294		561
GS30435		552
GS31001		552
GS31002		552
GS31030	17660-ZV5-902	548
GS31031	17660-ZV5-A00	548
GS31031	17660-ZW9-003	548
GS31032	116977-ZV5-900	549
GS31033	116977-ZV5-A00	549
GS31034	17650-921-003ZB	548
GS31064		549
GS31065		552
GS31066		552
GS31067		552
GS31068		548
GS31069		548
GS31090		547
GS31095		547
GS31096		547
GS31097		547
GS31099		547
GS31155		552
GS31156		552
GS31157		552
GS31166		552
GS31183		547
GS31187		547
GS31189		547
GS35031		547
GS35032		547
L		
LENS3213	17670-ZW1-801AH	550-551
LENS3227		550
LENS3240	17670-ZW1-030GH	551
N		
NGKBMR4A		559
NGKBPR5ES	98079-55846	545-559
NGKCR5EH-9	98059-55916	545-559
NGKCR5HSB		559
NGKDR4HS		559
NGKDR5HS	98066-55716	559
NGKDR6HS		545-559
NGKDR7EA	98069-5771P	545-546-559
NGKDR7EB	98069-5777P	546
NGKIZFR6K-11E	31916-ZX2-003	559
NGKIZFR6K11	31916-ZY3-003	546-559
NGKLMAR6C-9	31908-ZZ3-003	546-559
NGKZFR7F		546-559
P		
PAF15-04000003	90507-921-000	545-546
PAF15-07000031	19300-881-741	566
PAF15-07000031	19300-921-003	566
PAF15-07000031	19300-ZW9-003	566
PAF15-07000031	19300-ZW9-003	545-546-566-567
PAF4-04000030		548
PAF4-05000010		548
PAF40-0701000EI		550
PAGB/T91-2.5X30	90758-ZV1-000	545-546
PH130-0054	31200-ZV5-003	560
PH130-0054	31200-ZV5-013	560
PH130-0064	31200-ZW1-004	560
PH130-0065	31200-ZW5-003	560
PH130-0070	31200-ZY3-003	560
PH130-0070	31200-ZY3A-0034	560
PH200-T021	36120-ZV5-821	562
PH200-T046	36120-ZV5-822	562
PH200-WH01		562
PRE3300C05	24911-ZW7-U01	565
PRE3300C06	24912-ZW7-U01	565
PRE3300C07	24913-ZW7-U01	565
PRE3300C08	24914-ZW7-U01	565
PRE3300C09	24915-ZW7-U01	565
PRE3300C10	24916-ZW7-U01	565
PRE3300C11	24917-ZW7-U01	565
PRE3300C12	24918-ZW7-U01	565
PRE3300C13	24919-ZW7-U01	565
PRE3300C14	24920-ZW7-U01	565
PRE3300C15	24921-ZW7-U01	565
PRE3300C16	24922-ZW7-U01	565
PRE3300C17	24923-ZW7-U01	565
PRE3300C18	24924-ZW7-U01	565
PRE3300C19	24925-ZW7-U01	565
PRE3300C20	24926-ZW7-U01	565
PRE3300C21	24927-ZW7-U01	565
PRE3300C22	24928-ZW7-U01	565
PRE3300C23	24929-ZW7-U01	565
PRE3300C24	24930-ZW7-U01	565
PRE3300C25	24931-ZW7-U01	565
PRE3300C26	24932-ZW7-U01	565
PRE3300C27	24933-ZW7-U01	565
PRE3300C28	24934-ZW7-U01	565
PRE3300C29	24935-ZW7-U01	565
PRE3300C30	24936-ZW7-U01	565
PRE3300C31	24937-ZW7-U01	565
PRE3300C32	24938-ZW7-U01	565
R		
RAC025-RAC-02	06176-ZW3-801AH	553
RAC120R-RAC-01	06178-ZW1-030GH	551
RAC23289-10		550
RAC23299-10		550
RAC320R-INOX-01	06177-ZW1-801AH	551
RAC320R-INOX-02		551
RAC320R-RAC-01		550-551
RAC320R-RAC-02		551
RAC320R-RAC-03	06177-ZW1-801AH	550-551
RAC490R-RAC-01		550
RACPFF5510		549
RACRK22628		552
RACS2502	17670-ZW3-801AH	553
RACS3213	17670-ZW1-801AH	550-551
RACS3220UL		551
RACS3227		550
RACS3240	17670-ZW1-030GH	551
REC004		559
REC06160-ZV4-U11	06160-ZV4-U11	556
REC06164-PCA-000	06164-PCA-000	555
REC06192-881-C00	06192-881-C00	570
REC06192-ZV1-000	06192-ZW1-000	546-570
REC06192-ZV1-000	06192-ZV1-000	570
REC06192-ZV1-305	06192-ZV1-305	546-570
REC06192-ZV1-305	06192-ZW1-305	570
REC06192-ZV1-C00	06192-ZV1-C00	545-570
REC06192-ZV4-000	06192-ZV4-000	545-570
REC06192-ZV4-000	19210-ZV4-651	570
REC06192-ZV5-003	06192-ZV5-003	545-546-570
REC06192-ZV7-000	06192-ZV7-000	545-570
REC06192-ZV7-000	06192-ZW2-000	570
REC06192-ZW9-A30	06192-ZW9-A30	545-570
REC06192-ZY3-000	06192-ZX2-000	570
REC06192-ZY3-000	06192-ZY3-000	570
REC06192-ZY3-000	06192-ZY3-000	546
REC06192-ZY6-000	06192-ZY6-000	546-570
REC06193-ZV5-020	06193-ZV5-000	570
REC06193-ZV5-020	06193-ZV5-010	570
REC06193-ZV5-020	06193-ZV5-020	570
REC06211-ZV1-505	06211-ZV1-505	545
REC06211-ZV4-505	06211-ZV4-505	545
REC06211-ZV5-505	06211-ZV5-505	545
REC06211-ZV7-505	06211-ZV7-505	545
REC06211-ZW0-505	06211-ZW0-505	546
REC06211-ZW5-505	06211-ZW5-505	546
REC06211-ZW9-505	06211-ZW9-505	545
REC06211-ZY0-505	06211-ZY0-505	545
REC06211-ZY2-506	06211-ZY2-506	546
REC06211-ZY5-505	06211-ZY5-505	546
REC06211-ZY9-505	06211-ZY9-505	546
REC06211-ZZ3-506	06211-ZZ3-506	546
REC06211-ZZ5-505	06211-ZZ5-505	546
REC06240-ZW5-U40	06240-ZW5-U40	564
REC06240-ZW5-U40	06240-ZW5-U001	564
REC06240-ZW5-U60	06240-ZW5-U60	564
REC09401-11425		548
REC09401-11425		548
REC09401-11425BULK		548
REC09401-11425BULK		548
REC10W30U3	08207-10W30M-FC-W	553
REC10W30U6	08209-10W30M-FC-W	553
REC10W40U3		553
REC10W40U6		553
REC12-191833	12-191833	545-546-574
REC12209-6B4-681	12209-GB4-681	575
REC12251-ZV5-003	12251-ZW4-H01	574
REC12251-ZV5-003	12251-ZV5-000	573
REC12251-ZV5-003	12251-ZV5-003	573
REC12251-ZV7-004	12251-ZV7-004	573
REC12251-ZW1-014	12251-ZW1-004	573
REC12251-ZW1-014	12251-ZW1-014	573
REC12251-ZW5-023	12251-ZW5-003	573
REC12251-ZW5-023	12251-ZW5-013	573
REC12251-ZW5-023	12251-ZW5-023	573
REC14400-ZV5-014	14400-ZV5-004	574
REC14400-ZV5-014	14400-ZV5-014	574
REC14400-ZZ3-004	14400-ZZ3-004	574
REC15112-ZW5-003	15112-ZW5-003	573
REC15400-PLM-A01PE	15400-PH1-F03	554
REC15400-PLM-A01PE	15400-PLM-A01PE	554
REC15400-PLM-A01PE	15400-POH-305	554
REC15400-PLM-A01PE	15400-POH-305PE	554
REC15400-PLM-A01PE	15400-RTA-003	554
REC15400-PLM-A01PE	15400-RTA-004	554
REC15400-PLM-A01PE	15400-ZJI-004	546-554
REC15400-RBA-F01	15400-RBA-F01	546-554
REC16010-ST5-993	16900-ST5-993	553
REC16010-ZV4-005	06160-ZV4-U11	556
REC16010-ZV4-005	16010-ZV4-005	556
REC16010-ZV4-005	16010-ZV4-005	556
REC16010-ZW9-003	16010-ZW9-003	556
REC16011-881-741	16011-881-741	555
REC16011-ZV4-005	16011-ZV4-005	555
REC16201-881-850	16201-881-850	575
REC16221-ZV4-610	16221-ZV4-610	575
REC16221-ZW1-000	16221-ZW1-000	575
REC16221-ZW9-000	16221-ZW9-000	576
REC16700-ZW1-004	16700-ZW1-004	555
REC16700-ZW1-004	16700-ZV5-003	555
REC16735-ZW5-003	16735-ZW5-003	555
REC16735-ZW5-003	16735-ZY3-004	555
REC16900-SA5-004	16900-SA5-004	545-546-552
REC16900-SR3-004	16900-SR3-004	546-552
REC16901-ZY3-003	16901-ZY3-003	553
REC16901-ZY3-003	16911-ZY3-003	553
REC16910-GB2-005	16900-GB2-005	545-552
REC16910-ZV4-015	16910-ZV4-015	545-552
REC16911-ZY3-010	16911-ZY3-010	546-553
REC16911-ZZ5-003	16911-ZZ5-003	546-553
REC17105-ZY3-004	17105-ZY3-004	575
REC17105-ZY6-000	17105-ZY6-000	575
REC17109-ZY3-004	17109-ZY3-004	575
REC17109-ZY6-000	17109-ZY6-000	575
REC17151-ZW5-000	17151-ZW5-000	575
REC17384-ZW4-000	17384-ZW4-000	574
REC17710-ZW9-033	17710-ZW9-023	548
REC17710-ZW9-033	17710-ZW9-033	548
REC18-6865		563
REC18-7053		556
REC18-8362-1		578
REC18-8363		578
REC18-8365		578
REC18-8366		578
REC19210-881-003	19210-881-003	568
REC19210-881-003	19210-881-A01	568
REC19210-881-003	19210-881-A02	568
REC19210-881-003	19210-881-A02	568
REC19210-ZV4-013	19210-ZV4-013	567-568
REC19210-ZV4-651	19210-ZV4-651	567-568
REC19210-ZV5-003	19210-ZV5-003	546-568-576
REC19210-ZV7-003	19210-ZV7-003	567-568
REC19210-ZW1-B02	19210-ZW1-B02	568
REC19210-ZW1-B02	19210-ZW1-B03	568
REC19210-ZW1-B02	19210-ZW1-B04	568
REC19210-ZW1-B02	19210-ZW1-B04	568
REC19210-ZW9-013	19210-ZW9-003	567
REC19210-ZW9-013	19210-ZW9-013	567

REF	R.O. / OEM	
REC19210-ZW9-013	19210-ZW9-013	545-568
REC19210-ZW9-A32	19210-ZW9-A31	568
REC19210-ZW9-A32	19210-ZW9-A32	568
REC19210-ZW9-A32	19210-ZW9-A32	568
REC19210-ZY3-003	19210-ZY3-003	568
REC19210-ZY9-H01	19210-ZY9-H01	567-568
REC19221-ZV5-000	19221-ZV5-000	576
REC19223-ZV5-000	19223-ZV5-000	576
REC19231-ZV5-000	19231-ZV5-000	576
REC19232-881-850	19232-881-850	569
REC19232-ZV1-A10	19232-ZV1-A10	569
REC19232-ZV4-610	19232-ZV4-610	569
REC19233-ZV5-000	19233-ZV5-000	569-576
REC19234-881-850	19234-881-850	569
REC19234-ZY3-000	19234-ZY3-000	569
REC19242-ZV5-000	19242-ZV5-000	569-476
REC19253-ZV5-000	19253-ZV5-000	576
REC19300-881-761	19300-881-761	545-566-567
REC19300-ZV5-043	19300-ZV5-003	566
REC19300-ZV5-043	19300-ZV5-013	566
REC19300-ZV5-043	19300-ZV5-023	566
REC19300-ZV5-043	19300-ZV5-033	566
REC19300-ZV5-043	19300-ZV5-043	566
REC19300-ZV5-043	19300-ZV5-043	546-566-567
REC22-8M0001721		548
REC23172-ZW1-013	23172-ZW1-013	573
REC23172-ZW5-013	23172-ZW5-000	573
REC23172-ZW5-013	23172-ZW5-013	573
REC24800-ZZ5-A02	24800-ZZ5-A01	564
REC24800-ZZ5-A02	24800-ZZ5-A02	564
REC24800-ZZ5-A02	24800-ZZ5-A22	564
REC24942	06177-ZX2-000HE	549
REC24950		549
REC24952	06177-ZX2-000HE	549
REC25-457101	91353-ZW1-003	577
REC25-457101	91353-ZW1-003	578
REC25000		549
REC25010		549
REC25020		549
REC25030		549
REC25W40U3		553
REC26-43035	91251-ZW1-003	577-578
REC26-43036	91254-ZW1-003	577-578
REC26-70081	91255-ZW1-003	578
REC26-70081	91351-ZW1-003	577-578
REC26-76868	91252-ZW1-003	577-578
REC26-8164641	91253-ZW1-003	577-578
REC27-430331	19234-ZW1-003	569-577
REC27-430472	19242-ZW1-003	569-577
REC27-8172771	19232-ZW1-003	569-577
REC2TU3		553
REC2TU6		553
REC30520-PNA-007	30520-PNA-007	559
REC30520-PWC-003	30520-PWC-S01	559
REC30520-ZVL-003	30520-ZVL-003	559
REC30520-ZX2-003	30520-ZX2-003	559
REC30520-ZY3-003	30520-ZY3-003	559
REC30530-P8F-A01	30530-P8F-A01	558
REC30530-PNA-003	30530-PNA-003	558
REC30530-RNA-A01	30530-RNA-A01	558
REC30580-ZV4-013	30580-ZV4-023	559
REC31-30894A1	91051-ZW1-003	577-579
REC31-30895T	91057-ZW1-003	577-579
REC31200-ZW9-802	31200-ZW9-801	560
REC31200-ZW9-802	31200-ZW9-802	560
REC31200-ZY6-003	31200-ZY6-003	560
REC31200-ZY6-003	31200-ZY9-003	560
REC31200-ZY6-003	31200-ZY9A-0031	560
REC31630-ZW5-003	31630-ZW5-003	562
REC31630-ZY3-003	31630-ZY3-003	561
REC31630-ZY6-003	31630-ZY6-003	561
REC31630-ZY6-003	31630-ZY6-013	561
REC31638-ZY3-003	31638-ZY3-003	561-562
REC31638-ZY6-003	31638-ZY6-003	561-562
REC35-802893Q		549
REC35-802893Q01		549
REC35-822626Q03	15400-PFB-004	554
REC35-822626Q03	15400-PFB-014	554
REC35-822626Q03	15400-PFRB-007	554
REC35-822626Q03	15400-PJ7-015	554
REC35-822626Q03	15400-PM3-004	554
REC35-822626Q03	15400-PM3-405	554
REC35-822626Q03	15400-ZW4-003	554
REC35-822626Q03	15400-ZW4-003	545-546-554
REC35100-ZV5-013	35100-ZV5-013	565
REC35340-ZZ5-D21	35340-ZZ5-D21	565
REC35370-ZZ5-D02	35370-ZZ5-D02	565
REC35370-ZW5-U02	35370-ZW5-U02	565
REC35370-ZW5-U12	35370-ZW5-U12	565
REC35655-ZY3-013	35655-ZY3-013	558
REC35655-ZY9-003	35655-ZY9-003	558
REC35668-ZY6-003	35668-ZY6-003	558
REC36120-ZW4-H12	36120-ZW4-H12	563
REC36120-ZY3-013	36120-ZY3-013	563
REC36120-ZY6-013	36120-ZY6-013	563
REC36120-ZY6-013	36120-ZY6-023	563
REC36120-ZY9-003	36120-ZY9-003	563
REC36120-ZY9-003	36120-ZY9-013	563
REC36180-ZV5-033	36180-ZV5-003	561
REC36180-ZV5-033	36180-ZV5-013	561
REC36180-ZV5-033	36180-ZV5-023	561
REC36180-ZV5-033	36180-ZV5-033	561

REF	R.O. / OEM	
REC37260-RNA-A01	37260-RNA-A01	557
REC37500-PNB-003	37500-PNB-003	557
REC37510-PNB-003	37510-PNB-003	557
REC37830-PGK-A01	37830-PGK-A01	557
REC37830-PNC-003	37830-PNC-003	557
REC37830-RNA-A01	37830-RNA-A01	557
REC37840-R70-A01	37840-R70-A01	557
REC37880-PLC-004	37880-PLC-004	558
REC38550-ZV5-823	38550-ZV5-823	563
REC38550-ZY6-003	38550-ZY6-003	563
REC38550-ZY6-003	HZY-638550-003	563
REC38580-ZY6-013	38580-ZY6-003/13	558
REC38580-ZY9-023	38580-ZY9-023/13/03	558
REC38580-ZY9-023	HZY-38580-003	558
REC387247	91053-ZW1-003	577-579
REC40135		552
REC40145		552
REC40155		552
REC40165		552
REC40970		561
REC40990		561
REC41109-ZV5-000	41109-ZV5-000	579
REC41161-ZV5-000	41161-ZV5-000	579
REC47-43026Q02	19120-ZW1-303	577
REC47-43026Q02	19210-ZW1-303	567-568
REC47-43026Q06	19021-ZW1-003	570-577
REC5GH-13440-00	15400-PFB-007	554
REC5W40U3	08207-5W30M2	553
REC5W40U6		553
REC650-24351-51		548
REC67F-12411-01	19300-ZX2-003	566-567
REC6AH-12411-00	19300-ZY3-023	566-567
REC6E5-12411-30	19300-ZY6-003	566-567
REC6E5-24351-51		548
REC70720		552
REC80W90U3	08739-90W	553
REC80W90U6		553
REC8172761	19231-ZW1-003	569-577
REC855686		549
REC90301-ZW1-003	90301-ZW1-003	577
REC90508-ZW1-003	90508-ZW1-003	577-579
REC90752-ZV4-650	90752-ZV4-650	569
REC90752-ZV5-003	90752-ZV5-003	546-569-576
REC90752-ZV7-000	90752-ZV7-000	569
REC90752-ZW1-B02	90752-ZW1-003	577
REC90752-ZW1-B02	90752-ZW1-B02	569
REC90752-ZY3-003	90752-ZY3-003	569
REC90794-46866		551
REC90794-46868		551
REC91251-ZV5-003	91251-ZV5-003	576
REC91252-935-004	91252-935-004	570
REC91252-ZV1-003	91252-ZV1-003	570
REC91351-740-003	91351-740-003	576
REC91353-ZV5-003	91353-ZV5-003	576
REC91356-ZV5-000	91356-ZV5-000	576
REC91555-ZV5-000	91555-ZV5-000	576
RECOBBRACKET		549
RECOBELEMENT		550
RECOBFILALU		550
RECOBFILTER		550
RECPIN4		563
RECPIN4.5		563
RECPIN6		563
RECTOOLTRIM1		563
RECTOOLTRIM2		563
RECTOOLTRIM3		563
RECTOOLTRIMKIT		563
RECYS-225-15		551
RM06111-ZW1-020	06111-ZW1-000	574
RM06111-ZW1-020	06111-ZW1-020	574
RM061A1-ZV0-000	061A1-ZV0-000	574
RM14400-921-024	14400-921-010	574
RM14400-921-024	14400-921-024	574
RM14400-ZV4-004	14400-ZV4-004	574
RM14400-ZW1-004	14400-ZW1-004	574
RM19211-ZV0-003	19211-ZV0-003	568
RM35-802893Q		549
RM92-858026QB1U6		553
RM92-858027QB1U3		553
RM92-8M0086220U6		553
RM92-8M0086221U3		553

S

SIE18-8013		547
SIE18-8015		547
SOL1511-142-23	58233-ZY3-A23H	581
SOL1511-143-21	58233-ZY3-A21H	581
SOL1511-145-19	58233-ZY3-A19H	581
SOL1511-148-17	58233-ZY3-A17H	581
SOL1511-150-15	58233-ZY3-A15H	581
SOL1512-142-23		581
SOL1512-143-21		581
SOL1512-145-19		581
SOL1512-148-17		581
SOL1512-150-15		581
SOL1513-140-21	58233-ZY3-A21H	581
SOL1513-140-23	58233-ZY3-A23H	581
SOL1513-143-19	58233-ZY3-A19H	581
SOL1513-145-17	58233-ZY3-A17H	581
SOL1513-148-15	58233-ZY3-A15H	581
SOL1531-140-19	08M60-ZW7-A00	581
SOL1531-140-21	08M60-ZW7-A10	581

REF	R.O. / OEM	
SOL1531-140-23	08M60-ZW7-A20	581
SOL1531-140-25	08M60-ZW7-A30	581
SOL1531-143-17	58233-ZY3-A17H	581
SOL1531-145-15	08M60-ZW7-A40	581
SOL1532-140-19	58233-ZY3-B19H	581
SOL1532-140-21		581
SOL1532-140-23		581
SOL1532-143-17	58233-ZY3-B17H	581
SOL1532-145-15	58233-ZY3-B15H	581
SOL1542-150-19		581
SOL1542-155-15		581
SOL1571-145-25		581
SOL1571-148-23		581
SOL1571-150-21		581
SOL1571-153-19		581
SOL1571-155-17		581
SOL1571-158-15		581
SOL1572-148-23		581
SOL1572-150-21		581
SOL1572-153-19		581
SOL1572-155-17		581
SOL1572-158-15		581
SOL3111-093-07		581
SOL3111-093-08	58130-ZV4-703ZB	581
SOL3111-093-09	58130-ZV4-030ZB	581
SOL3111-093-10		581
SOL3111-093-11		581
SOL3311-110-15		581
SOL3311-110-16		581
SOL3311-110-17		581
SOL3311-111-13	58130-ZV5-000ZA	581
SOL3311-111-14	58130-ZV5-870ZA	581
SOL3311-114-12	58130-ZV5-850ZA	581
SOL3311-116-11		581
SOL3311-121-09	58130-ZV5-860ZA	581
SOL5211-099-09	58130-ZV7-850ZA	581
SOL5211-099-10		581
SOL5211-099-11	58130-ZV7-000ZA	581
SOL5211-099-12		581
SOL5211-099-13		581
SOL6001-073-06P	58130-ZV0-841ZB	581
SOL6011-079-06P		581
SOL6011-079-07P		581
SOL6411-130-19	58130-ZW1-W41ZA	581
SOL6411-130-21	58130-ZW1-W41ZA	581
SOL6411-133-17	58130-ZW1-W31ZA	581
SOL6411-135-14		581
SOL6411-135-15	58130-ZW1-W21ZA	581
SOL6411-138-13	58130-ZW1-W11ZA	581
SOL6411-140-11	58130-ZW1-W01ZA	581
SOL6412-133-17	58130-ZW1-W61ZA	581
SOL6412-135-15	58130-ZW1-W31ZA	581
SOL6413-125-19	58130-ZW1-W41ZA	581
SOL6413-125-21	58130-ZW1-W41ZA	581
SOL6413-128-17	58130-ZW1-W31ZA	581
SOL6413-130-15	58130-ZW1-W21ZA	581
SOL6413-133-13	58130-ZW1-W11ZA	581
SOL6431-130-19	58130-ZW1-W41ZA	581
SOL6431-130-21	58130-ZW1-W41ZA	581
SOL6431-133-17	58130-ZW1-W31ZA	581
SOL6431-135-15	58130-ZW1-W21ZA	581
SOL6431-138-13	58130-ZW1-W11ZA	581
SOL6431-140-11	58130-ZW1-W01ZA	581
SOL9311-110-15		582
SOL9311-111-13		582
SOL9311-111-14		582
SOL9311-114-12		582
SOL9311-116-11		582
SOL9311-120-10		582
SOL9311-121-09		582
SOL9331-110-15		582
SOL9331-111-13		582
SOL9331-111-14		582
SOL9331-114-12		582
SOL9331-116-11		582
SOL9411-132-19		582
SOL9411-132-21		582
SOL9411-133-17		582
SOL9411-135-15		582
SOL9411-138-13		582
SOL9411-140-09		582
SOL9411-140-11		582
SOL9431-130-19		582
SOL9431-130-21		582
SOL9431-133-17		582
SOL9431-135-15		582
SOL9431-138-13		582
SOL9432-130-19		582
SOL9432-133-17		582
SOL9432-135-15		582
SOL9432-138-13		582
SOL9511-143-21		582
SOL9511-145-19		582
SOL9511-148-17		582
SOL9511-150-15		582
SOL9511-153-13		582
SOL9511-155-11		582
SOL9511-160-13		582
SOL9531-140-19		582
SOL9531-140-21		582
SOL9531-140-23		582
SOL9531-143-17		582
SOL9531-145-15		582
SOL9532-140-19		582

REF	R.O. / OEM	
SOL9532-140-21		582
SOL9532-140-23		582
SOL9532-143-17		582
SOL9532-145-15		582
SOL9571-145-25		582
SOL9571-148-23		582
SOL9571-150-21		582
SOL9571-153-19		582
SOL9571-155-17		582
SOL9571-158-15		582
SOL9572-145-25		582
SOL9572-148-23		582
SOL9572-150-21		582
SOL9572-153-19		582
SOL9572-155-17		582

REF	R.O. / OEM	
SOL9572-158-15		582
SOLRBX-102		582
SOLRBX-107		582
SOLRBX-113		582
T		
TEN01400	41106-ZW-000	572
TEN01401	41106-935-812	572
TEN01402	41106-ZV4-650	545-572
TEN01403	41107-ZV5-000	572
TEN01404	06411-ZV5-000	572
TEN01404	06411-ZV5-020	572
TEN01405	06411-ZV1-000	572
TEN01406	06411-ZV1-000	572
TEN01407	41109-ZW1-B00	572

REF	R.O. / OEM	
TEN01408	12155-ZV4-A00	572
TEN01408/1	12155-ZV5-000	545-572
TEN01409	41106-ZW9-000	572
TEN01410	41107-ZW1-B01ZA	572
TEN01411	41107-ZV1-003-ZA	572
TEN01412	06412-ZV5-000	572
TENKITHONDABF		572
THKS-1		561
THKS-12		561
THKS-2		561
THKS-22		561
THL-4		561
TRI305-0386		547
TRI305-0566		547

RO / OEM --> REF

R.O. / OEM	REF	
06111-ZW1-000	RM06111-ZW1-020	574
06111-ZW1-020	RM06111-ZW1-020	574
06160-ZV4-U11	REC06160-ZV4-U11	556
06160-ZV4-U11	REC16010-ZV4-005	556
06164-PCA-000	REC06164-PCA-000	555
06176-ZW3-801AH	RAC025-RAC-02	553
06177-ZW1-801AH	RAC320R-INOX-01	551
06177-ZW1-801AH	RAC320R-RAC-03	550-551
06177-ZX2-000HE	REC24942	549
06177-ZX2-000HE	REC24952	549
06178-ZW1-030GH	RAC120R-RAC-01	551
06192-881-C00	REC06192-881-C00	570
06192-ZV1-305	REC06192-ZV1-305	546-570
06192-ZV1-000	REC06192-ZV1-C00	570
06192-ZV1-000	REC06192-ZV1-000	570
06192-ZV1-C00	REC06192-ZV1-C00	545-570
06192-ZV4-000	REC06192-ZV4-000	545-570
06192-ZV5-003	REC06192-ZV5-003	545-546-570
06192-ZV7-000	REC06192-ZV7-000	545-570
06192-ZW1-000	REC06192-ZV1-000	546-570
06192-ZW1-305	REC06192-ZV1-305	570
06192-ZW2-000	REC06192-ZV7-000	570
06192-ZW9-A30	REC06192-ZW9-A30	545-570
06192-ZX2-000	REC06192-ZY3-000	570
06192-ZY3-000	REC06192-ZY3-000	546-570
06192-ZY6-000	REC06192-ZY6-000	546-570
06193-ZV5-000	REC06193-ZV5-020	570
06193-ZV5-010	REC06193-ZV5-020	570
06193-ZV5-020	REC06193-ZV5-020	570
061A1-ZV0-000	RM061A1-ZV0-000	574
06211-ZV1-505	REC06211-ZV1-505	545
06211-ZV4-505	REC06211-ZV4-505	545
06211-ZV5-505	REC06211-ZV5-505	545
06211-ZV7-505	REC06211-ZV7-505	545
06211-ZW0-505	REC06211-ZW0-505	546
06211-ZW5-505	REC06211-ZW5-505	546
06211-ZW9-505	REC06211-ZW9-505	545
06211-ZY0-505	REC06211-ZY0-505	545
06211-ZY2-506	REC06211-ZY2-506	546
06211-ZY5-505	REC06211-ZY5-505	546
06211-ZY9-505	REC06211-ZY9-505	546
06211-ZZ3-506	REC06211-ZZ3-506	546
06211-ZZ5-505	REC06211-ZZ5-505	546
06240-ZW5-U40	REC06240-ZW5-U40	564
06240-ZW5-U001	REC06240-ZW5-U40	564
06240-ZW5-U60	REC06240-ZW5-U60	564
06411-ZV1-000	TEN01405	572
06411-ZV1-000	TEN01406	572
06411-ZV5-000	CM06411-ZV5-000	571
06411-ZV5-000	CM06411-ZV5-000A	571
06411-ZV5-000	TEN01404	572
06411-ZV5-020	CM06411-ZV5-000	571
06411-ZV5-020	CM06411-ZV5-000A	571
06411-ZV5-020	TEN01404	572
06411-ZW1-000	CM06411-ZW1-000	571
06411-ZW1-000	CM06411-ZW1-000A	571
06411-ZW1-020	CM06411-ZW1-000	571
06411-ZW1-020	CM06411-ZW1-000A	571
06412-ZV1-000	CM31640	572
06412-ZV1-000	CM31640A	572
06412-ZV5-000	CM41107-ZV500	572
06412-ZV5-000	CM41107-ZV500A	572
06412-ZV5-000	TEN01412	572
06412-ZV5-000	CM664-45371-01	572
06412-ZV5-000	CM664-45371-01A	572

R.O. / OEM	REF	
08207-10W30M-FC-W	REC10W30U3	553
08207-5W30M2	REC5W40U3	553
08209-10W30M-FC-W	REC10W30U6	553
08739-90W	REC80W90U3	553
08M60-ZW7-A00	SOL1531-140-19	581
08M60-ZW7-A10	SOL1531-140-21	581
08M60-ZW7-A20	SOL1531-140-23	581
08M60-ZW7-A30	SOL1531-140-25	581
08M60-ZW7-A40	SOL1531-145-15	581
116977-ZV5-900	GS31032	549
116977-ZV5-A00	GS31033	549
12-191833	REC12-191833	545-546-574
12155-ZV4-A00	TEN01408	572
12155-ZV5-000	CM826134	571
12155-ZV5-000	CM826134A	571
12155-ZV5-000	TEN01408/1	545-572
12209-GB4-681	REC12209-6B4-681	575
12251-ZV5-000	REC12251-ZV5-003	573
12251-ZV5-003	REC12251-ZV5-003	573
12251-ZV7-004	REC12251-ZV7-004	573
12251-ZW1-004	REC12251-ZW1-014	573
12251-ZW1-014	REC12251-ZW1-014	573
12251-ZW4-H01	REC12251-ZV5-003	573
12251-ZW5-003	REC12251-ZW5-023	573
12251-ZW5-013	REC12251-ZW5-023	573
12251-ZW5-023	REC12251-ZW5-023	573
14400-921-010	RM14400-921-024	574
14400-921-024	RM14400-921-024	574
14400-ZV4-004	RM14400-ZV4-004	574
14400-ZV5-004	REC14400-ZV5-014	574
14400-ZV5-014	REC14400-ZV5-014	574
14400-ZW1-004	RM14400-ZW1-004	574
14400-ZZ3-004	REC14400-ZZ3-004	574
15112-ZW5-003	REC15112-ZW5-003	573
15400-PFB-004	REC35-822626Q03	554
15400-PFB-007	REC5GH-13440-00	554
15400-PFB-014	REC35-822626Q03	554
15400-PFRB-007	REC35-822626Q03	554
15400-PH1-F03	REC15400-PLM-A01PE	554
15400-PJ7-015	REC35-822626Q03	554
15400-PLM-A01PE	REC15400-PLM-A01PE	554
15400-PM3-004	REC35-822626Q03	554
15400-PM3-405	REC35-822626Q03	554
15400-POH-305	REC15400-PLM-A01PE	554
15400-POH-305PE	REC15400-PLM-A01PE	554
15400-RBA-F01	REC15400-RBA-F01	546-554
15400-RTA-003	REC15400-PLM-A01PE	554
15400-RTA-004	REC15400-PLM-A01PE	554
15400-ZJI-004	REC15400-PLM-A01PE	546-554
15400-ZW4-003	REC35-822626Q03	545-546-554
16010-ZV4-005	REC16010-ZV4-005	556
16010-ZW9-003	REC16010-ZW9-003	556
16011-881-741	REC16011-881-741	555
16011-ZV4-005	REC16011-ZV4-005	555
16201-881-850	REC16201-881-850	575
16221-ZV4-610	REC16221-ZV4-610	575
16221-ZW1-000	REC16221-ZW1-000	575
16221-ZW9-000	REC16221-ZW9-000	575
16700-ZV5-003	REC16700-ZW1-004	555
16700-ZW1-004	REC16700-ZW1-004	555
16735-ZW5-003	REC16735-ZW5-003	555
16735-ZY3-004	REC16735-ZW5-003	555
16900-GB2-005	REC16910-GB2-005	545-552
16900-SA5-004	REC16900-SA5-004	545-546-552

R.O. / OEM	REF	
16900-SR3-004	REC16900-SR3-004	546-552
16900-ST5-993	REC16010-ST5-993	553
16901-ZY3-003	REC16901-ZY3-003	553
16910-ZV4-015	REC16910-ZV4-015	545-552
16911-ZY3-003	REC16901-ZY3-003	553
16911-ZY3-010	REC16911-ZY3-010	546-553
16911-ZZ5-003	REC16911-ZZ5-003	546-553
17105-ZY3-004	REC17105-ZY3-004	575
17105-ZY6-000	REC17105-ZY6-000	575
17109-ZY3-004	REC17109-ZY3-004	575
17109-ZY6-000	REC17109-ZY6-000	575
17151-ZW5-000	REC17151-ZW5-000	575
17384-ZW4-000	REC17384-ZW4-000	574
17650-921-003ZB	GS31034	548
17660-ZV5-902	GS31030	548
17660-ZV5-A00	GS31031	548
17660-ZW9-003	GS31031	548
17670-ZW1-030GH	LENS3240	551
17670-ZW1-030GH	RACS3240	551
17670-ZW1-801AH	LENS3213	550-551
17670-ZW1-801AH	RACS3213	550-551
17670-ZW3-801AH	RACS2502	553
17710-ZW9-023	REC17710-ZW9-033	548
17710-ZW9-033	REC17710-ZW9-033	548
17822-90J00	REC09401-11425	548
17822-90J00	REC09401-11425BULK	548
19021-ZW1-003	REC47-43026Q06	570-577
19120-ZW1-303	REC47-43026Q02	577
19210-881-003	REC19210-881-003	568
19210-881-A01	REC19210-881-003	568
19210-881-A02	REC19210-881-003	568
19210-ZV4-013	CEF500328	568
19210-ZV4-013	REC19210-ZV4-013	567-568
19210-ZV4-651	CEF500343	568
19210-ZV4-651	REC06192-ZV4-000	570
19210-ZV4-651	REC19210-ZV4-651	567-568
19210-ZV5-003	CEF500338	568
19210-ZV5-003	REC19210-ZV5-003	546-568-576
19210-ZV7-003	CEF500339	568
19210-ZV7-003	REC19210-ZV7-003	567-568
19210-ZW1-303	CEF500301	568
19210-ZW1-303	REC47-43026Q02	567-568
19210-ZW1-B02	REC19210-ZW1-B02	568
19210-ZW1-B04	CEF500337	568
19210-ZW1-B04	REC19210-ZW1-B02	568
19210-ZW9-003	REC19210-ZW9-013	567
19210-ZW9-013	CEF500347	568
19210-ZW9-013	REC19210-ZW9-013	545-567-568
19210-ZW9-A31	REC19210-ZW9-A32	568
19210-ZW9-A32	CEF500348	568
19210-ZW9-A32	REC19210-ZW9-A32	568
19210-ZY3-003	CEF500391	568
19210-ZY3-003	REC19210-ZY3-003	568
19210-ZY9-H01	REC19210-ZY9-H01	567-568
19211-ZV0-003	RM19211-ZV0-003	568
19221-ZV5-000	REC19221-ZV5-000	576
19223-ZV5-000	REC19223-ZV5-000	576
19231-ZV5-000	REC19231-ZV5-000	576
19231-ZW1-003	REC8172761	569-577
19232-881-850	REC19232-881-850	569
19232-ZV1-A10	REC19232-ZV1-A10	569
19232-ZV4-610	REC19232-ZV4-610	569
19232-ZW1-003	REC27-8172771	569-577
19233-ZV5-000	REC19233-ZV5-000	569-576
19234-881-850	REC19234-881-850	569
19234-ZW1-003	REC27-430331	569-577

R.O. / OEM	REF	
19234-ZY3-000	**REC19234-ZY3-000**	569
19242-ZV5-000	**REC19242-ZV5-000**	569-576
19242-ZW1-003	**REC27-430472**	569-577
19253-ZV5-000	**REC19253-ZV5-000**	576
19300-881-741	**PAF15-07000031**	566
19300-881-761	**REC19300-881-761**	545-566-567
19300-921-003	**PAF15-07000031**	566
19300-ZV5-003	**REC19300-ZV5-043**	566
19300-ZV5-013	**REC19300-ZV5-043**	566
19300-ZV5-023	**REC19300-ZV5-043**	566
19300-ZV5-033	**REC19300-ZV5-043**	566
19300-ZV5-043	**REC19300-ZV5-043**	546-566-567
19300-ZW9-003	**PAF15-07000031**	545-546-566-567
19300-ZX2-003	**REC67F-12411-01**	566-567
19300-ZY3-023	**REC6AH-12411-00**	566-567
19300-ZY6-003	**REC6E5-12411-30**	566-567
2155-ZV5-000	**CM6E0-45251-11**	572
2155-ZV5-000	**CM6E0-45251-11A**	572
23172-ZW1-013	**REC23172-ZW1-013**	573
23172-ZW5-000	**REC23172-ZW5-013**	573
23172-ZW5-013	**REC23172-ZW5-013**	573
24800-ZZ5-A01	**REC24800-ZZ5-A02**	564
24800-ZZ5-A02	**REC24800-ZZ5-A02**	564
24800-ZZ5-A22	**REC24800-ZZ5-A02**	564
24911-ZW7-U01	**PRE3300C05**	565
24912-ZW7-U01	**PRE3300C06**	565
24913-ZW7-U01	**PRE3300C07**	565
24914-ZW7-U01	**PRE3300C08**	565
24915-ZW7-U01	**PRE3300C09**	565
24916-ZW7-U01	**PRE3300C10**	565
24917-ZW7-U01	**PRE3300C11**	565
24918-ZW7-U01	**PRE3300C12**	565
24919-ZW7-U01	**PRE3300C13**	565
24920-ZW7-U01	**PRE3300C14**	565
24921-ZW7-U01	**PRE3300C15**	565
24922-ZW7-U01	**PRE3300C16**	565
24923-ZW7-U01	**PRE3300C17**	565
24924-ZW7-U01	**PRE3300C18**	565
24925-ZW7-U01	**PRE3300C19**	565
24926-ZW7-U01	**PRE3300C20**	565
24927-ZW7-U01	**PRE3300C21**	565
24928-ZW7-U01	**PRE3300C22**	565
24929-ZW7-U01	**PRE3300C23**	565
24930-ZW7-U01	**PRE3300C24**	565
24931-ZW7-U01	**PRE3300C25**	565
24932-ZW7-U01	**PRE3300C26**	565
24933-ZW7-U01	**PRE3300C27**	565
24934-ZW7-U01	**PRE3300C28**	565
24935-ZW7-U01	**PRE3300C29**	565
24936-ZW7-U01	**PRE3300C30**	565
24937-ZW7-U01	**PRE3300C31**	565
24938-ZW7-U01	**PRE3300C32**	565
30520-PNA-007	**REC30520-PNA-007**	559
30520-PWC-S01	**REC30520-PWC-003**	559
30520-ZX2-003	**REC30520-ZX2-002**	559
30520-ZYL-003	**REC30520-ZYL-002**	559
30520-ZY3-003	**REC30520-ZY3-002**	559
30530-P8F-A01	**REC30530-P8F-A01**	558
30530-PNA-003	**REC30530-PNA-003**	558
30530-RNA-A01	**REC30530-RNA-A01**	558
30580-ZV4-023	**REC30580-ZV4-013**	559
38550-ZV5-023	**REC38550-ZV5-023**	563
38550-ZY6-003	**REC38550-ZY6-006**	563
38580-ZY6-003/13	**REC38580-ZY6-013**	558
38580-ZY9-003/13/23	**REC38580-ZY9-023**	558
31200-ZV5-003	**PH130-0054**	560
31200-ZV5-013	**PH130-0054**	560
31200-ZW1-004	**PH130-0064**	560
31200-ZW5-003	**PH130-0065**	560
31200-ZW9-801	**REC31200-ZW9-802**	560
31200-ZW9-802	**REC31200-ZW9-802**	560
31200-ZY3-003	**PH130-0070**	560
31200-ZY3A-0034	**PH130-0070**	560
31200-ZY6-003	**REC31200-ZY6-003**	560
31200-ZY9-003	**REC31200-ZY6-003**	560
31200-ZY9A-0031	**REC31200-ZY6-003**	560
31630-ZW5-003	**REC31630-ZW5-003**	562
31630-ZY3-003	**REC31630-ZY3-003**	561
31630-ZY6-003	**REC31630-ZY6-003**	561
31630-ZY6-013	**REC31630-ZY6-003**	561
31638-ZY3-003	**REC31638-ZY3-003**	561-562
31638-ZY6-003	**REC31638-ZY6-003**	561-562
31908-ZZ3-003	**NGKLMAR6C-9**	546-559
31916-ZX2-003	**NGKIZFR6K-11E**	559
31916-ZY3-003	**NGKIZFR6K11**	546-559

R.O. / OEM	REF	
35100-ZV5-013	**REC35100-ZV5-013**	565
35340-ZZ5-D21	**REC35340-ZZ5-D21**	565
35370-ZW5-U02	**REC35370-ZW5-U02**	565
35370-ZW5-U12	**REC35370-ZW5-U12**	565
35370-ZZ5-D02	**REC35370-ZZ5-D02**	565
35655-ZY3-013	**REC35655-ZY3-013**	558
35655-ZY9-003	**REC35655-ZY9-003**	558
35668-ZY6-003	**REC35668-ZY6-003**	558
36120-ZV5-821	**PH200-T021**	562
36120-ZV5-822	**PH200-T046**	562
36120-ZW4-H12	**REC36120-ZW4-H12**	563
36120-ZY3-013	**REC36120-ZY3-013**	563
36120-ZY6-013	**REC36120-ZY6-013**	563
36120-ZY6-023	**REC36120-ZY6-013**	563
36120-ZY9-003	**REC36120-ZY9-003**	563
36180-ZV5-003	**REC36180-ZV5-033**	561
36180-ZV5-013	**REC36180-ZV5-033**	561
36180-ZV5-023	**REC36180-ZV5-033**	561
36180-ZV5-033	**REC36180-ZV5-033**	561
37260-RNA-A01	**REC37260-RNA-A01**	557
37500-PNB-003	**REC37500-PNB-003**	557
37510-PNB-003	**REC37510-PNB-003**	557
37830-PGK-A01	**REC37830-PGK-A01**	557
37830-PNC-003	**REC37830-PNC-003**	557
37830-RNA-A01	**REC37830-RNA-A01**	557
37840-R70-A01	**REC37840-R70-A01**	557
37880-PLC-004	**REC37880-PLC-004**	558
41106-935-812	**TEN01401**	572
41106-ZV4-650	**TEN01402**	545-572
41106-ZW-000	**TEN01400**	572
41106-ZW9-000	**CM41106-ZW9-000A**	572
41106-ZW9-000	**CM41106-ZW9-09000**	572
41106-ZW9-000	**TEN01409**	572
41106-ZW9-090	**CM41106-ZW9-09000**	545
41106ZW909000	**CM41106-ZW9-000A**	572
41106ZW909000	**CM41106-ZW9-09000**	572
41107-ZV1-003-ZA	**TEN01411**	572
41107-ZV5-000	**CM41107-ZV500A**	545
41107-ZV5-000	**TEN01403**	572
41107-ZW1-B01ZA	**TEN01410**	572
411072ZW1003	**CM31640**	572
411072ZW1003	**CM31640A**	572
41107ZV500	**CM41107-ZV500**	572
41107ZV500	**CM41107-ZV500A**	572
41107ZW1-B01	**CM41107-ZW1-B01**	572
41107ZW1-B01	**CM41107-ZW1-B01A**	572
41109-ZV5-000	**REC41109-ZV5-000**	579
41109-ZW1-003	**CM826134**	571
41109-ZW1-003	**CM826134A**	571
41109-ZW1-B00	**CM41109-ZW1-B00**	571
41109-ZW1-B00	**CM41109-ZW1-B00A**	571
41109-ZW1-B00	**TEN01407**	572
41161-ZV5-000	**REC41161-ZV5-000**	579
58130-ZV0-841ZB	**SOL6001-073-06P**	581
58130-ZV4-030ZB	**SOL3111-093-09**	581
58130-ZV4-703ZB	**SOL3111-093-08**	581
58130-ZV5-000ZA	**SOL3311-111-13**	581
58130-ZV5-850ZA	**SOL3311-114-12**	581
58130-ZV5-860ZA	**SOL3311-121-09**	581
58130-ZV5-870ZA	**SOL3311-111-14**	581
58130-ZV7-000ZA	**SOL5211-099-11**	581
58130-ZV7-850ZA	**SOL5211-099-09**	581
58130-ZW1-W01ZA	**SOL6411-140-11**	581
58130-ZW1-W01ZA	**SOL6431-140-11**	581
58130-ZW1-W11ZA	**SOL6411-138-13**	581
58130-ZW1-W11ZA	**SOL6413-133-13**	581
58130-ZW1-W11ZA	**SOL6431-138-13**	581
58130-ZW1-W21ZA	**SOL6411-135-15**	581
58130-ZW1-W21ZA	**SOL6413-130-15**	581
58130-ZW1-W21ZA	**SOL6431-135-15**	581
58130-ZW1-W31ZA	**SOL6411-133-17**	581
58130-ZW1-W31ZA	**SOL6412-135-15**	581
58130-ZW1-W31ZA	**SOL6413-128-17**	581
58130-ZW1-W31ZA	**SOL6431-133-17**	581
58130-ZW1-W41ZA	**SOL6411-130-19**	581
58130-ZW1-W41ZA	**SOL6411-130-21**	581
58130-ZW1-W41ZA	**SOL6413-125-19**	581
58130-ZW1-W41ZA	**SOL6413-125-21**	581
58130-ZW1-W41ZA	**SOL6431-130-19**	581
58130-ZW1-W41ZA	**SOL6431-130-21**	581
58130-ZW1-W61ZA	**SOL6412-133-17**	581
58233-ZY3-A15H	**SOL1511-150-15**	581
58233-ZY3-A15H	**SOL1513-148-15**	581
58233-ZY3-A17H	**SOL1511-148-17**	581
58233-ZY3-A17H	**SOL1513-145-17**	581
58233-ZY3-A17H	**SOL1531-143-17**	581

R.O. / OEM	REF	
58233-ZY3-A19H	**SOL1511-145-19**	581
58233-ZY3-A19H	**SOL1513-143-19**	581
58233-ZY3-A21H	**SOL1511-143-21**	581
58233-ZY3-A21H	**SOL1513-140-21**	581
58233-ZY3-A23H	**SOL1511-142-23**	581
58233-ZY3-A23H	**SOL1513-140-23**	581
58233-ZY3-B15H	**SOL1532-145-15**	581
58233-ZY3-B17H	**SOL1532-143-17**	581
58233-ZY3-B19H	**SOL1532-140-19**	581
90301-ZW1-003	**REC90301-ZW1-003**	577
90507-921-000	**PAF15-04000003**	545-546
90508-ZW1-003	**REC90508-ZW1-003**	577-579
90752-ZV4-650	**REC90752-ZV4-650**	569
90752-ZV5-003	**REC90752-ZV5-003**	546-569-576
90752-ZV7-000	**REC90752-ZV7-000**	569
90752-ZW1-003	**REC90752-ZW1-B02**	577
90752-ZW1-B02	**REC90752-ZW1-B02**	569
90752-ZY3-003	**REC90752-ZY3-003**	569
90758-ZV1-000	**PAGB/T91-2.5X30**	545-546
91051-ZW1-003	**REC31-30894A1**	577-579
91053-ZW1-003	**REC387247**	577-579
91057-ZW1-003	**REC31-30895T**	577-579
91251-ZV5-003	**REC91251-ZV5-003**	576
91251-ZW1-003	**REC26-43035**	577-578
91252-935-004	**REC91252-935-004**	570
91252-ZV1-003	**REC91252-ZV1-003**	570
91252-ZW1-003	**REC26-76868**	577-578
91253-ZW1-003	**REC26-8164641**	577-578
91254-ZW1-003	**REC26-43036**	577-578
91255-ZW1-003	**REC26-70081**	578
91351-740-003	**REC91351-740-003**	576
91351-ZW1-003	**REC26-70081**	577-578
91353-ZV5-003	**REC91353-ZV5-00**	576
91353-ZW1-003	**REC25-457101**	577-578
91355-ZV5-000	**REC91555-ZV5-000**	576
91356-ZV5-000	**REC91356-ZV5-000**	576
98059-55916	**NGKCR5EH-9**	545-559
98066-55716	**NGKDR5HS**	559
98069-5771P	**NGKDR7EA**	545-546-559
98069-5777P	**NGKDR7EB**	546
98079-55846	**NGKBPR5ES**	545-559
HZX2-30520-003	**REC30520-ZX2-003**	559
HZY-38580-003	**REC38580-ZY9-023**	558
HZY-638550-003	**REC38550-ZY6-003**	563

TOHATSU

ES

GUÍA MANTENIMIENTO 589
SISTEMA DE ALIMENTACIÓN Y FILTRACIÓN 590
ACEITE 595
BOMBA DE COMBUSTIBLE EN LÍNEA 590
ABRAZADERA PARA MANGUERA 591
ADAPTADOR LÍNEA DE COMBUSTIBLE 591
BOMBA DE COMBUSTIBLE 590
LÍNEA DE COMBUSTIBLE 590
MANGUERA DE COMBUSTIBLE 590
MUELLE TUBO COMBUSTIBLE 591
BOMBA DE COMBUSTIBLE 596
KITS MEMBRANAS Y JUNTAS 596
CARBURADOR 596
BOYAS 597
CARBURADOR COMPLETO 596
KITS CARBURADORES 597
COMPONENTES TANQUE Y CONECTORES 591
CONECTOR DE DEPÓSITO 591
PASAMAMPAROS 592
FILTRO DE ACEITE 596
FILTRO DE COMBUSTIBLE Y ELEMENTOS 592
BRACKET 592
FILTRO DECANTADOR DE COMBUSTIBLE COMPLETO CON VASO TRASPARENTE 593
FILTRO DECANTADOR DE GASOLINA 593
FILTRO COMBUSTIBLE MONTAJE EN LÍNEA 594
FILTRO COMBUSTIBLE SEPARADOR AGUA 592
LLAVES PARA FILTRO 594
RACOR DE LATÓN 594
SISTEMA ELÉCTRICO 598
BOBINAS 598
ALTA PRESIÓN 599
PULSACIÓN 599
IGNICIÓN 599
CARGA 599
BUJÍAS 600
CDI Y CAJAS NEGRAS 601
MOTORES DE ARRANQUE 600
SENSORES 598
SENSOR PRESIÓN ACEITE 598
SENSOR DE OXÍGENO 598
SENSOR ÁRBOL DE LEVAS 598
TRIM, TILT & POWER TRIM 602
INSTALACIÓN ELÉCTRICA 602
POWER TRIM COMPLETO 602
TRIM COMPLETO 602
SISTEMA DE GOBIERNO 603
COMPONENTES 603
CABLES DE ACELERADOR 603
SISTEMA DE REFRIGERACIÓN 603
ÁNODOS 606
ÁNODO CANADA METAL 606
ÁNODO TECNOSEAL 607
BOMBA DE AGUA 605
CASQUILLO INOX 605
JUNTAS BOMBA 605
JUNTAS BASE DE BOMBA 605
KITS DE REPARACIÓN BOMBA DE AGUA 605
IMPULSORES 604
TERMOSTATO 603
JUNTAS TAPA DE REFRIGERACIÓN 604
JUNTA TERMOSTATO 604
PARTES DEL MOTOR 608
CIGÜEÑAL 619
RODAMIENTOS 619
DESPIECE MOTOR DE 4 TIEMPOS 613
MFS8 • MFS9.9 613
DESPIECE MOTOR DE 2 TIEMPOS 608
M4C • M5B • M5BS 608
M6B • M8B • M9.8B 609
M9.9D • M15D2 • M18E2 610
M25C3 • M30A4 611
M40D2 • M50D2 612
JUNTAS DE MOTOR 4 TIEMPOS 617
JUNTAS BASE DE MOTOR 618
JUNTAS CULATÍN 617
JUNTAS DE CULATA 617
KIT JUNTAS DE CULATA 617
PISTONES 619
KIT DE PISTONES 619
RETENES DE ACEITE 618
SISTEMA DE ESCAPE Y ADMISIÓN 621
SISTEMA DE ADMISIÓN 621
JUNTAS DE ADMISIÓN 621
SISTEMA DE ESCAPE 621
JUNTAS DE ESCAPE 621
UNIDADES DE TRANSMISIÓN 622
DESPIECE COLAS 4 TIEMPOS 622
MFS8 • MFS9.8 622
GUÍA PIEZA DE COLA 626
SISTEMA DE PROPULSIÓN 627
HÉLICES ALUMINIO E INOXIDABLE DE 3 Y 4 PALAS 627
GUÍA HÉLICES CON NÚCLEO INTEGRADO 628
HÉLICES PARA NÚCLEO INTERCAMBIABLE 629
NÚCLEO INTERCAMBIABLE 629
REF --> RO 630
RO --> REF

EN

DRIVES MAINTENANCE GUIDE & KITS 589
FUEL & FILTRATION SYSTEM 590
CARBURATOR 596
CARBURETOR KITS 597
FLOATS 597
FULL CARBURATOR 596
FUEL FILTERS AND ELEMENTS 592
BRACKET 592
COMPLET FUEL FILTER 594
COMPLET FUEL FILTER WITH TRANSPARENT BOWL 593
FILTER KEY 594
IN-LINE FUEL FILTER 594
RACORS 594
WATER SEPARATING FUEL FILTER 592
FUEL PUMP 596
DIAPHRAGMS & GASKETS 596
FUEL PUMP IN LINE 590
CLAMP SMALL 591
COUPLER 591
FUEL HOSE 590
FUEL LINE ASSEMBLY 590
SPRING, FUEL PIPE 591
FUEL TANK COMPONENTS & CONNECTORS 591
TANK CONNECTOR 591
THRU HULL 592
OIL 595
OIL FILTER 596
ELECTRIC SYSTEM 598
CDI & POWER PACK 601
COILS 598
COIL HIGH PRESSURE 599
PULSER COIL 599
IGNITION COIL 599
CHARGER COIL 599
SENSORS 598
SENSOR, OIL PRESURE 598
SENSOR, OXYGEN 598
SENSOR, CAMSHAFT 598
SPARK 600
STARTERS 600
TRIM, TILT & POWER TRIM 602
COMPLETE POWER TRIM ASSEMBLY 602
COMPLETE TRIM ASSEMBLY 602
WIRING HARNESS 602
STEERING SYSTEM 603
COMPONENTS 603
CONTROL CABLES 603
COOLING SYSTEM 603
ANODES 606
ANODES CANADA METAL 606
ANODES TECNOSEAL 607
IMPELLERS 604
THERMOSTAT 603
GASKET BASE 603
EXHAUST INNER COVER 604
WATER PUMP 605
GASKET 605
GASKET BASE 605
INSERT CUP 605
SERVICE KIT 605
ENGINE PARTS 608
CRANKSHAFT 619
CRANKSHAFT BEARINGS 619
ENGINE GASKETS 4 STROKES 617
GASKET, CYLINDER COVER 617
GASKET, CYLINDER HEAD 617
GASKET KIT, CYLINDER HEAD 617
ENGINE PARTS 2 STROKES 608
M4C • M5B • M5BS 608
M6B • M8B • M9.8B 609
M9.9D •M15D2 • M18E2 610
M25C3 • M30A4 611
M40D2 • M50D2 612
ENGINE PARTS 4 STROKES 613
MFS8 • MFS9.9 613
PISTONS 619
PISTON KITS 619
OIL SEALS 618
EXHAUST & INTAKE SYSTEM 621
EXHAUST SYSTEM 621
GASKETS 621
INTAKE SYSTEM 621
GASKETS 621
UNIT DRIVES & COMPONENTS 622
DRIVE COMPONENTS GUIDE 626
GEAR CASE PARTS 4 STROKES 622
MFS8 • MFS9.8 622
PROPULSION SYSTEM 627
3 & 4 BLADE ALUMINIUM & SS PROPELLERS 627
INTERCHANGEABLE HUB 629
PROPELLERS APPLICATION WITH RUBBER HUB 629
PROPELLERS FOR INTERCHANGEABLE HUB 629
REF --> OEM 630
OEM --> REF 632

IT

GUIDA MANUTENZIONE E KIT 589

SISTEMA DI ALIMENTAZIONE E FILTRAZIONE 590

CARBURATORE 596
- CARBURATORE COMPLETO 596
- GALLEGGIANTE 597
- KIT CARBURATORI 597

COMPONENTI SERBATOIO E CONNETTORI 591
- ATTACCO SERBATOIO 591
- PASSASCAFO 592

FILTRI BENZINA E RACCORDI 592
- CHIAVE DA FILTRO 594
- FILTRO BENZINA PER MONTARE IN LÍNEA 594
- FILTRO DECANTATORE BENZINA 593
- FILTRO DI DECANTAZIONE BENZINA COMPLETO CON VASCHETTA TRASPARENTE 593
- FILTRO SEPARATORE ACQUA-BENZINA 592
- RACCORDI 594
- SUPPORTO 592

FILTRO OLIO 596

OLIO 595

POMPA BENZINA 596
- MEMBRANA E GUARNIZIONI 596

POMPA BENZINA IN LINEA 590
- ADATTATORE 591
- FASCETTE 591
- MOLLA TUBO COMBUSTIBILE 591
- POMPA BENZINA 590
- TUBO BENZINA 590

SISTEMA ELETTRICO 598

BOBINE 598
- BOBINA ALTA PRESSIONE 599
- BOBINA ACCENSIONE 599
- BOBINA AVVIAMENTO 599
- BOBINA DI CARICA 599

CANDELE 600

CDI E CENTRALINA 601

MOTORINI AVVIAMENTO 600

SENSORE 598
- SENSORE PRESIONE OLIO 598
- SENSORE OSSIGENO 598
- SENSORE ALBERO A CAMME 598

TRIM, TILT & POWER TRIM 602
- INSTALLAZIONE ELETTRICA 602
- MOTORINO POWER TRIM COMPLETO 602
- MOTORINO TRIM COMPLETO 602

SISTEMA DI GUIDA 603

COMPONENTI 603
- CAVO ACCELERATORE 603

SISTEMA DI RAFFREDDAMENTO 603

ANODI 606
- ANODI CANADA METAL 606
- ANODI TECNOSEAL 607

GIRANTE 604
- GUIDA GIRANTE 604

POMPA ACQUA 605
- GHIERA INOX 605
- GUARNIZIONE BASE POMPA 605
- GUARNIZIONE POMPA 605
- KIT RICAMBI POMPA ACQUA 605

TERMOSTATO 603
- GUARNIZIONE TERMOSTATO 604
- GUARNIZIONE COPERCHIO REFRIGERAZIONE 604

PARTI MOTORE 608

ALBERO MOTORE 619
- CUSCINETTI ALBERO MOTORE 619

GUARNIZIONI MOTORE 4 TEMPI 617
- GUARNIZIONE BASE MOTORE 618
- GUARNIZIONE TESTATA 617
- GUARNIZIONE COPERCHIO TESTA 617
- KIT GUARNIZIONE TESTATA 617

PARAOLIO 618

PARTI MOTORE 4 TEMPI 613
- MFS8 • MFS9.9 613

PARTI MOTORE 2 TEMPI 608
- M4C • M5B • M5BS 608
- M6B • M8B • M9.8B 609
- M9.9D •M15D2 • M18E2 610
- M25C3 • M30A4 611
- M40D2 • M50D2 612

PISTONE 619
- KIT PISTONE 619

SISTEMA DI SCARICO E ASPIRAZIONE 621

SISTEMA ASPIRAZIONE 621
- GUARNIZIONE 621

SISTEMA SCARICO 621
- GUARNIZIONE 621

UNITÀ DI TRASMISSIONE 622

GUIDA COMPONENTI PIEDI 626

PARTI PIEDI 4 TEMPI 622
- MDF8 • MSF9.8 622

SISTEMA DI PROPULSIONE 627

ELICHE ALLUMINIO E INOX DA 2 E 4 PALE 627
- ELICHE PER MOZZO INTERCAMBIABILE 629
- GUIDA ELICHE CON MOZZO 628
- MOZZO INTERCAMBIABILE 629

REF --> RO 630

RO --> REF 632

FR

GUIDE MAINTENANCE KITS 589

SYSTÈME D'ALIMENTATION ET DE FILTRATION 590

CARBURATEUR 596
- CARBURATEUR COMPLET 596
- FLOTTEUR DE CARBURATEUR 597
- KIT CARBURATEUR 597

COMPOSANTS ET CONNECTEURS DU RÉSERVOIR 591
- PASSE-CLOISON 592
- RACCORDS DE RESERVOIR 551

FILTRE À ESSENCE ET CARTOUCHE DE RECHANGE 592
- CLÉ À FILTRE 594
- FILTRE DÉCANTEUR ESSENCE 593
- FILTRE DÉCANTEUR ESSENCE AVEC BOL TRANSPARENT 593
- FILTRE À ESSENCE EN LIGNE 594
- FILTRE SÉPARATEUR EAU-ESSENCE 592
- RACCORDS 594
- TÊTE DE FILTRE À ESSENCE 592

FILTRE À HUILE 596

HUILES 595

POIRE À CARBURANT 590
- COLLIER 591
- POIRE À CARBURANT 591
- RACCORD COUPLEUR 591
- RESSORT, TUYAU DE CARBURANT 591
- TUYAU CARBURANT 590

POMPE À ESSENCE 596
- MEMBRANES ET JOINTS 596

SYSTÈME ÉLECTRIQUE 598

BOBINES 598
- BOBINE HAUTE PRESION 599
- BOBINE PULSEUR 599
- BOBINE D'ALLUMAGE 599
- BOBINE DE CHARGE 599

BOUGIES 600

CAPTEURS 598
- CAPTEUR PRESION HUILE 598
- CAPTEUR À OXYGENE 598
- CAPTEUR DE POSITION D'ARBRE À CAMES 598

CDI ET BOITIER ELECTRONIQUE 601

DEMARREUR 600

TRIM, TILT & POWER TRIM 602
- INSTALLATION ELECTRIQUE 602
- MOTEUR DE TRIM 602
- POWER TRIM COMPLET 602

SYSTÈME DE COMMANDE 603

COMPOSANT 603
- CÂBLE D'ACCELERATEUR 603

SYSTÈME DE REFROIDISSEMENT 603

ANODES 606
- ANODE CANADA METAL 606
- ANODE TECNOSEAL 606

TURBINES 604

POMPE D'EAU 605
- INSERT INOX 605
- JOINTS, BASE DE POMPE À EAU 605
- JOINTS POMPE 605
- KIT REPARATION DE POMPE À EAU 605

THERMOSTAT 603
- JOINT THERMOSTAT 604
- JOINT COUVERCLE THERMOSTAT 604

PIÈCES MOTEUR 608

JOINTS DE MOTEUR 4 TEMPS 617
- JOINTS COUVRE CULASSE 617
- JOINTS DE CULASSE 617
- JOINTS DE TÊTE MOTRICE 618
- KIT JOINTS DE MOTEUR 617

PIECES MOTEURS DE 4 TEMPS 613
- MFS8 • MFS9.9 613

PIECES MOTEUR 2 TEMPS 608
- M4C • M5B • M5BS 608
- M6B • M8B • M9.8B 609
- M9.9D •M15D2 • M18E2 610
- M25C3 • M30A4 611
- M40D2 • M50D2 612

PISTONS 619
- KIT PISTON 619

VILEBREQUIN 619
- ROULEMENTS VILEBREQUIN 619

SYSTÈME D'ECHAPPEMENT ET SYSTÈME D'ADMISSION 621

SYSTÈME D'ADMISSION 621
- JOINTS 621

SYSTÈME D'ECHAPPEMENT 621
- JOINTS 621

EMBASES ET PIÈCES 622

PIÈCES D'EMBASES DE 4 TEMPS 622
- MFS8 • MFS9.9 622

GUIDE PIÈCES D'EMBASES 626

SYSTEME DE PROPULSION 627

HÉLICE ALUMINIUM ET INOX 3 ET 4 PALES 627
- GUIDE DES HÉLICES ET MOYEUX 628
- HELICES AVEC MOYEU INTERCHANGEABLE 628
- MOYEU INTERCHANGEABLE 629

REF --> RO 630

RO --> REF 632

	REF					
MFS4 MFS5 MFS6	NGKDCPR6E	BUJÍA	SPARK PLUG	CANDELE	BOUGIE	1
	TEN01259	ÁNODO	ANODE DRIVE	ANODO	ANODE	1
	CEF500377	IMPULSOR	IMPELLER	GIRANTE	TURBINE	1
	PAF4-05000300	FILTRO COMBUSTIBLE	FUEL FILTER	FILTRO BENZINA	FILTRE À ESSENCE	1
MFS8 MFS9.8	NGKDCPR6E	BUJÍA	SPARK PLUG	CANDELE	BOUGIE	2
	TEN01258	ÁNODO BLOQUE	ANODE ENGINE	ANODO MOTORE	ANODE MOTEUR	1
	CEF500344	IMPULSOR	IMPELLER	GIRANTE	TURBINE	1
	PAF4-05000300	FILTRO COMBUSTIBLE	FUEL FILTER	FILTRO BENZINA	FILTRE À ESSENCE	1
	REC855676002	TERMOSTATO	THERMOSTAT	TERMOSTATO	TERMOSTAT	1
	PAF8-05000004	CORREA DISTRIBRIBUCIÓN	TIMING BELT	CINGHIE DISTRIBUZIONE	COURROIE DE DISTRIBUTION	1
	TEN01260	ÁNODO COLA	ANODE DRIVE	ANODO PIEDE	ANODE EMBASSE	1
MFS9.9 MFS15 MFS18	NGKDCPR6E	BUJÍA	SPARK PLUG	CANDELE	BOUGIE	2
	TEN01258	ÁNODO BLOQUE	ANODE ENGINE	ANODO MOTORE	ANODE MOTEUR	1
	CEF500383	IMPULSOR	IMPELLER	GIRANTE	TURBINE	1
	PAF4-05000300	FILTRO COMBUSTIBLE	FUEL FILTER	FILTRO BENZINA	FILTRE À ESSENCE	1
	REC5GH-13440-00	FILTRO ACEITE	OIL FILTER	FILTRO OLIO	FILTRE À HUILE	1
	REC855676002	TERMOSTATO	THERMOSTAT	TERMOSTATO	TERMOSTAT	1
	TEN01250	ÁNODO TRANSOM	TRANSOM ANODE	ANODO TRANSOM	ANODE TRANSOM	1
MFS25 MFS30	NGKDCPR6E	BUJÍA	SPARK PLUG	CANDELE	BOUGIE	2
	TEN01258	ÁNODO BLOQUE	ANODE ENGINE	ANODO MOTORE	ANODE MOTEUR	1
	CEF500382	IMPULSOR	IMPELLER	GIRANTE	TURBINE	1
	PAF4-05000300	FILTRO COMBUSTIBLE	FUEL FILTER	FILTRO BENZINA	FILTRE À ESSENCE	1
	REC855676002	TERMOSTATO	THERMOSTAT	TERMOSTATO	TERMOSTAT	1
	REC5GH-13440-00	FILTRO ACEITE	OIL FILTER	FILTRO OLIO	FILTRE À HUILE	1
	TEN01256	ÁNODO TRANSOM	TRANSOM ANODE	ANODO TRANSOM	ANODE TRANSOM	1
	TEN01253	ÁNODO COLA	ANODE DRIVE	ANODO PIEDE	ANODE EMBASE	1

SISTEMA DE ALIMENTACIÓN Y FILTRACIÓN
FUEL & FILTRATION SYSTEM
SISTEMA DI ALIMENTAZIONE E FILTRAZIONE
SYSTÈME D'ALIMENTATION ET DE FILTRATION

BOMBA DE COMBUSTIBLE | FUEL PUMP | POMPA BENZINA | POIRE À CARBURANT

BOMBA DE COMBUSTIBLE

Fabricada con elastómeros termoplásticos inyectados, resistentes al alcohol y rayos UV.s

REF		
GS31187	1/4" = 6 mm	1
GS31090	5/16" = 8 mm	1
GS31095	3/8" = 9.5 mm	1
GS31090	5/16" = 8 mm	1

FUEL PUMP

Premium quality bulb resistence to alcohol as well as UV and ozone.

POMPA BENZINA

Fabbricata con elastomero termoplastico, resistente ai solventi e raggi UV.

POIRE À CARBURANT

Fabriqué avec des élastomères thermoplastiques injectés, résistant à l'alcohol et aux rayons UV.

GOLDENSHIP



LÍNEA DE COMBUSTIBLE

Universal. Manguera resistente al alcohol.

REF		
GS31096	5/16" x 2 m	1
GS31097	3/8" x 2 m	1
GS31099	8 mm x 2 m	1
SIE18-8013	5/16" x 2 m	1
SIE18-8015	3/8" x 2 m	1

FUEL LINE ASSEMBLY

Universal. Alcohol resistant hose.



TUBO CARBURANTE

Universale. Tubo resistente ai solventi.



TUYAU CARBURANT

Universel. Tuyau résistant à l'alcool.



SIE18-8013
SIE18-8015

REF		
GS31189	3/8" x 2 m	1

MADE IN THE USA

GOLDENSHIP



new

REF		
GS31183	6 mm x 2 m	1

GOLDENSHIP



MANGUERA DE COMBUSTIBLE

Manguera «Trident» para líneas de combustible. Con refuerzo termoplástico que le permite excelente flexibilidad y resistencia a los rayos UV. Color gris. Resistente al alcohol. Especialmente indicado para motores fueraborda.
Garantía: 3 años

FUEL HOSE

Marine fuel hose (distribution and vent) for outboards. Fuel resistant thermo-plastic formulation with 2 spiral reinforcement provides excelent bendability and resistance to UV, aging and permeation by all marine fuels (gasoline/petrol and diesel) including alcohol blends.
Warranty: 3 years

TUBO BENZINA

Tubo «Trident» per linea combustibile. Con rinforzo termoplastico che gli permette un'eccellente flessibilità e resistenza ai raggi UV. Colore grigio. Resistente ai solventi. Indicato per i motori fuoribordo.
Garanzia: 3 anni

TUYAU CARBURANT

Tuyau «Trident» pour carburant. Avec renfort thermoplastique qui permet une excellente flexibilité et résistance aux rayons UV. Gris. Résistant à l'alcool Convient particulièrement aux moteurs hors-bord.
Garantie: 3 ans

REF	Ø			
TRI305-0566	5/16" = 7,92 mm	15 m	1	SAEJ1527 ISO-8469 B1 CE
TRI305-0386	3/8" = 9,53 mm	15 m	1	



TRIDENT

MADE IN THE USA

CE CERTIFIED

De goma para diesel y gasolina sin plomo. Ideal para fueraborda. Refuerzos texiles internos. Muy flexible. Contenido aromático 50%

Rubber Hose suitable for loading mineral oils, diesel and unloaded fuel

In gomma per diesel e benzina senza piombo. Ideale per motori fuoribordo. Tessuto interno rinforzato. Molto flessibile.

Caoutchouc pour diesel et essence sans plomb. Idéal pour le hors-bord. Renforts textiles internes. Très flexible

CARBUPOMP/10NL

REF	Ø (mm)					
GS35031	6x12	10 bar	50 mm	-25°C ➡80° C	50 m	ISO R1307
GS35032	8x15	10 bar	65 mm		50 m	

ht hoses technology

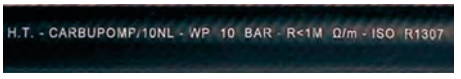

MUELLE TUBO COMBUSTIBLE | SPRING, FUEL PIPE | MOLLA TUBO COMBUSTIBILE | RESSORT, TUYAU DE CARBURANT

new

REF
PAF4-04000030
PAF4-05000010



ABRAZADERA | CLAMP SMALL | FASCETTE | COLLIER

new

REF	
REC650-24351-51	6 mm
REC6E5-24351-51	8 mm



REF		
REC09401-11425	6-8 mm	1
REC09401-11425BULK	6-8 mm	25



ADPATADOR LÍNEA DE COMBUSTIBLE | COUPLER | ADATTATORE | RACCORD COUPLEUR

REF	
REC22-8M0001721	Ø 11 mm --> Ø 9 mm



COMPONENTES TANQUE Y CONECTORES | FUEL TANK COMPONENTS & CONNECTORS | COMPONENTI SERBATOIO E CONETTORI | COMPOSANTS ET CONNECTEURS DU RÉSERVOIR

CONECTOR DE DEPÓSITO LATÓN | TANK CONNECTOR BRASS | ATTACCO SERBATOIO OTTONE | RACCORDS DE RESERVOIR LAITON

REF		
GS31068	1/4" NPT	1



GOLDENSHIP

Para conectar dos motores a un sólo depósito, o viceversa.

To connect two motors to a single tank, or vice versa.

Per collegare due motori a un singolo serbatoio o viceversa.

Pour connecter deux moteurs à un même réservoir, ou inversement.

REF		
GS31069	1/4" NPT	1



GOLDENSHIP MADE IN THE USA

REF	
GS31073	1/4" NPT

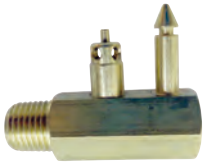

GOLDENSHIP MADE IN THE USA

REF	
GS31020	1/4" NPT



GOLDENSHIP MADE IN THE USA

CONECTOR DE DEPÓSITO | TANK CONNECTOR | ATTACCO SERBATOIO | RACCORDS DE RESERVOIR

REF	OEM		2T STROKES	4T STROKES	COMPATIBLE CON CONECTOR / COMPATIBLE WITH CONNECTOR / COMPATIBILE CON CONNETTORE / COMPATIBLE AVEC CONECTEUR
GS31088	3B2-702501M	3/8"	✔		GS31019

5 --> 90 HP

GOLDENSHIP MADE IN THE USA



REF	OEM		2T STROKES	4T STROKES	COMPATIBLE CON CONECTOR / COMPATIBLE WITH CONNECTOR / COMPATIBILE CON CONNETTORE / COMPATIBLE AVEC CONECTEUR
GS31019	99998-0MA2	1/4" NPT	✔	✔	GS31088

GOLDENSHIP MADE IN THE USA



REF	OEM		2T STROKES	4T STROKES	COMPATIBLE CON CONECTOR COMPATIBLE WITH CONNECTOR COMPATIBILE CON CONNETTORE COMPATIBLE AVEC CONECTEUR
GS31016	3B2-702801M	3/8"	✔		GS31017

5 --> 90 HP

GOLDENSHIP MADE IN THE USA



REF	OEM		2T STROKES	4T STROKES	COMPATIBLE CON CONECTOR COMPATIBLE WITH CONNECTOR COMPATIBILE CON CONNETTORE COMPATIBLE AVEC CONECTEUR
GS31017		1/4" NPT	✔		GS31016

5 --> 90 HP

GOLDENSHIP MADE IN THE USA



REF	OEM		2T STROKES	4T STROKES
GS31018	3B2-702601M	Metrica	✔	

GOLDENSHIP MADE IN THE USA

5 --> 90 HP



REF	OEM		2T STROKES	4T STROKES
GS31015	394-702500M	3/8"		✔

GOLDENSHIP MADE IN THE USA

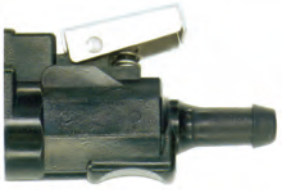

PASAMAMPAROS

Para atravesar mamparos de hasta 12 mm. Fabricado en latón.

REF		
GS31064	3/8"	1

THRU HULL

For bulkhead up to 12 mm. Made in machined brass.



PASSASCAFO

Per attraversare paratie fino a 12 mm. Fabbricato in ottone.

PASSE-CLOISON

Pour traverser des cloisons jusqu'à 12 mm. Fait en laiton.

GOLDENSHIP MADE IN THE USA

FILTRO DE COMBUSTIBLE Y ELEMENTOS

FUEL FILTERS AND ELEMENTS

FILTRI BENZINA E RACCORDI

FILTRE A ESSENCE ET CARTOUCHE DE RECHANGE

BRACKET

Con 2 tapones de bronce y 2 tubos de extensión. (2 entradas y 2 salidas).

BRACKET

With 2 brass plugs and 2 extension tubes. (2 inputs & 2 outputs).

SUPPORTO

Con 2 tappi di bronzo e 2 tubi di estensione. (2 ingressi entrata carburante e 2 uscite carburante).

TÊTE DE FILTRE À ESSENCE

Avec 2 bouchons en bronze et 2 tubes d'extension. (2 entrées et 2 sorties).

REF		
REC25000	1/4"	AL
REC25010	1/4"	INOX /SS AISI316
REC25020	3/8"	AL
REC25030	3/8"	INOX /SS AISI316
RECOBBRACKET	1/4"	Plástico | Plastic Plastica | Plastique





REC25000 - REC25020



REC25010 - REC25030



RECOBBRACKET

FILTRO COMBUSTIBLE SEPARADOR DE AGUA

WATER SEPARATING FUEL FILTER

FILTRO SEPARATORE ACQUA-BENZINA

FILTRE SEPARATEUR EAU-ESSENCE

REF		MICRON	
REC24942		10	4 7/16" 11 cm
REC35-802893Q01	3Y7-02234-0	10	3 3/4"
REC855686		28	4 7/16"
REC35-802893Q		25	3 3/4"
RACPFF5510		10	4 7/16"

RACOR



RACPFF5510

RECmar



REC24942



REC35-802893Q01



REC855686



REC35-802893Q

Filtro original.

OEM filter.

Filtro benzina originale.

Filtre à essence d'origine

REF	MICRON	
RM35-802893Q	10	3 3/4"



RECAMBIOS MARINOS

FILTRO CON BRACKET
Con 2 tapones de bronce y 1 tubo de extensión.

OEM FILTER WITH BRACKET
With 2 brass plugs & 1 extension tube.

FILTRO BENZINA CON SUPPORTO
Con 2 tappi di bronzo e 1 tubo di estensione.

FILTRE A ESSENCE AVEC SUPPORT
avec 2 bouchons en bronze et 1 tube d'extension

REF	MICRON			BRACKET
REC24950	25	1/4"	50 GPH	AL
REC24952	10	1/4"	50 GPH	AL



RECmar

FILTRO DECANTADOR DE COMBUSTIBLE COMPLETO CON VASO TRASPARENTE

COMPLET FUEL FILTER WITH TRANSPARENT BOWL

FILTRO DI DECANTAZIONE BENZINA COMPLETO CON VASCHETTA TRASPARENTE

FILTRE DÉCANTEUR ESSENCE AVEC BOL TRANSPARENT

RACOR

REF		BRACKET
RAC320R-RAC-01		AL
RAC320R-RAC-03	RACS3213 LENS3213	Plástico Plastic Plastica Plastique



REF			BRACKET
RECOBFILALU			AL
RECOBFILTER	RECOBELEMENT LENS3213	150 l/h	Plástico Plastic Plastica Plastique



RECmar

FILTRO CON BOMBA CEBADORA

FILTER WITH PRIMMING PUMP

FILTRO CON POMPETA PER RIEMPIRE

FILTRE A ESSENCE AVEC POMPE D'AMORCAGE

RACOR

REF		MICRON			
RAC490R-RAC-01	RACS3227 LENS3227	10	340 l/h	3/8" NPTF	150 hp



FILTRO DECANTADOR GASOLINA

COMPLETE FUEL FILTER

FILTRO DECANTATORE BENZINA

FILTRE DÉCANTEUR ESSENCE

Filtro de combustible con braket.

Complete fuel filter with braket.

Filtro combustibile con supporto.

Filtre à carburant avec support.

REF		
RAC23299-10	RAC23289-10	130 HP (4 T/ Strokes)

RACOR





RECmar

REF		MICRON		
REC90794-46866	REC90794-46868	10	117 l/h	175 hp







LLAVE PARA FILTRO
FILTER KEY
CHIAVE DA FILTRO
CLÉ À FILTRE

REF
RECYS-225-15



new

REF	MICRON	
PAF40-0701000EI	10	70 hp





RÁCORES — RACORS — RACCORDI — RACCORDS

REF			
GS31065	1/4" NPT	3/8" = 9.5 mm	1
GS31166	1/4" NPT	5/16" = 7.9 mm	2
GS31155	3/8" NPT	3/8" = 9.5 mm	2
GS31156	3/8" NPT	5/16" = 7.9 mm	2
GS31157	3/8" NPT	1/4" = 6.4 mm	2



REF			
GS31066	1/4" NPT	5/16" = 7.9 mm	2
GS31067	1/4" NPT	3/8" = 9.5 mm	2

GOLDENSHIP



LLAVES PARA FILTRO — FILTER KEY — CHIAVE DA FILTRO — CLÉ À FILTRE

REF
RACRK22628

RACOR



REF	
REC70720	65 - 110 mm

RECmar

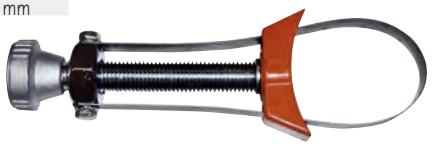

FILTRO COMBUSTIBLE PARA MONTAJE EN LÍNEA — IN-LINE FUEL FILTER — FILTRO BENZINA PER MONTARE IN LINEA — FILTRE A ESSENCE EN LIGNE

REF				
GS31001	50 l/h	6-8 mm	plástico plastic plastica plastique	1
GS31002	150 l/h	8-10 mm		1

GOLDENSHIP



GS31001

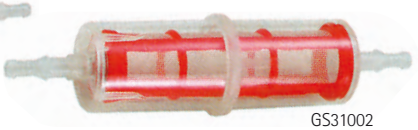

GS31002

new

REF	OEM
PAF15-07080000	3AC-02230-0 3AD-02230-0 3B7-02230-0

MFS25
MFS25B
MFS30



REF			
GS30435	6, 8, 10 mm	metal + cristal metal + crystal metallo + cristallo métal + verre	1



GOLDENSHIP

REF	OEM			
REC40145	40145	1/4"	1/4"	plástico plastic plastica plastique
REC40155	40155	5/16"	5/16"	
REC40165	40165	3/8"	3/8"	
REC40135	40135	5/16"	3/8"	



REF	OEM
REC35-80365M	

6 (1989, 1992-99)
8 (1989-99, 2001-02)
F4 (1999-02)
F9.9 (1989-95, 1997-99, 2001-02)
FT 9.9 (1988-90)



REF	OEM
PAF4-05000300	346-02230-0 366-02230-0

M5, M9.8, M9.9, M15, M18, M40
MFS4, MFS5, MFS6, MFS8, MFS9.9, MFS15, MFS20, MFS30



new

REF	OEM
REC16911-ZZ5-003	HZZ5-16911-003

BFTW60A
BFT60A

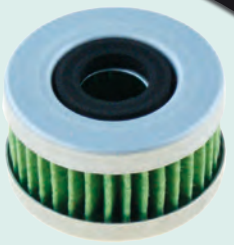

new

REF	OEM
REC16911-ZY3-010	HZY3-16911-010

BFT75AK1
BFT90AK1
BFT115A
BFT250A
BFT225A
BFT200A
BFT150A



ACEITE OIL OLIO HUILES

REF			
REC2TU6	1 L	6	2 STROKES TC-W3
REC2TU3	5 L	3	
REC5W40U6	1 L	6	SAE 5W40
REC5W40U3	5 L	3	
REC10W30U6	1 L	6	SAE 10W30
REC10W30U3	5 L	3	
REC10W40U6	1 L	6	SAE 10W40
REC10W40U3	5 L	3	
REC25W40U3	5 L	3	SAE 25W40
REC80W90U3	5 L	3	SAE 80W90
REC80W90U6	1 L	6	

RECLUBE

new



REF			
RM92-858026QB1U6	1 L	6	2 STROKES
RM92-858027QB1U3	3,8 L	3	
RM92-8M0086220U6	1 L	6	SAE 10W30
RM92-8M0086221U3	4 L	3	



RM92-858026QB1U6



RM92-858027QB1U3



RM92-8M0086220U6



RM92-8M0086221U3

FILTRO DE ACEITE OIL FILTER FILTRO OLIO FILTRE À HUILE

REF	OEM	4T STROKES
REC5GH-13440-00	3R3R76150M 3R0-07615-0 5GH-13440-00	✔

MFS15
MFS20
MFS20
MFS30
MFS40
MFS50
MFS60



new

REF	OEM
REC15400-PLM-A01PE	HPLM-15400-A0 HPLM-15400-PE

BFT75AK1
BFT90AK1
BFT225A
BFT250A
BFT200A
BFT150A
BFT115A



BOMBA DE COMBUSTIBLE FUEL PUMP POMPA BENZINA POMPE À ESSENCE

MEMBRANAS Y JUNTAS DIAPHRAGMS & GASKETS MEMBRANA E GUARNIZIONI MEMBRANES ET JOINTS

REF	OEM
REC8537312	350-04005-0

M9.9D2
M15D2
M18E2
M40D2
M50D2

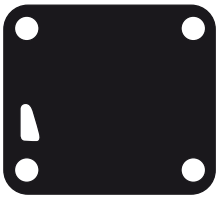

REF	OEM
REC27-8555691	3C8-04028-0

M9.9D2
M15D2
M18E2
M40D2
M50D2

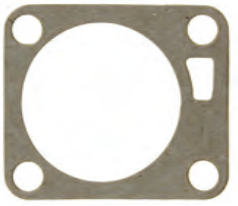

REF A	OEM
REC16275	369-03303-0

M4C
M5B
M5BS
M6B
M8B
M9.8B

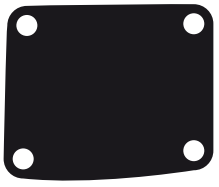

REF	OEM
REC27-16274	369-03302-0

M4C
M5B
M5BS
M6B
M8B
M9.8B

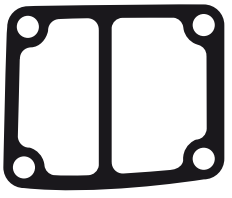

REF B	OEM
REC16325	369-03306-0

M4C
M5B
M5BS
M6B
M8B
M9.8B



REF	OEM
REC27-16326	369-03307-0

M4C
M5B
M5BS
M6B
M8B
M9.8B

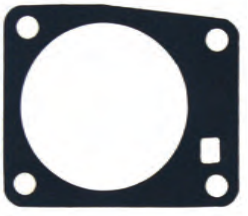

CARBURADOR CARBURATOR CARBURATORE CARBURATEUR

CARBURADOR COMPLETO FULL CARBURATOR CARBURATORE COMPLETO CARBURATEUR COMPLET

REF	OEM	4T STROKES
PAF8-05040000	3FS-03100-0 3V2-03100-2	✔

MFS8
MFS9.8HP



P. 37

REF
GEGC15



KITS CARBURADORES — CARBURETOR KITS — KIT CARBURATORI — KIT CARBURATEUR

REF	OEM
REC6H3-W0093-02	346-87122-0

45A2
50C
60C
70A2
M25C3
M30A4



REF	OEM
REC6G1-W0093-00	369-87122-1 3B2-87122-0

5B
8B
9.8
M4
M5
M6
M8
M9.8



new

REF	OEM
REC6H4-W0093-03	3F3-87122-1

M70

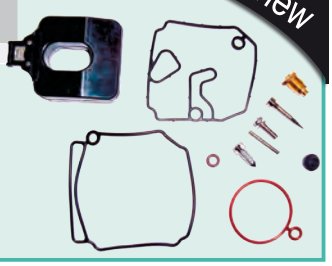

new

REF	OEM
REC66M-W0093-01	3V1-87122-0

MFS8
MFS9



new

REF	OEM
REC6H1-W0093-01-00	346-87122-0

M25
M30



new

REF	OEM
REC696-W0093-00	345-87122-4

C2
M40



new

REF	OEM
REC6A1-W0093-01	3F0-87122-2

M2.5
M3.5



KITS 2 CARBURADORES — KITS FOR 2 CARBURETORS — KIT 2 CARBURATORI — KIT 2 CARBURATEURS

REF	OEM
REC84419M	345-87122-0

M35C
M40C

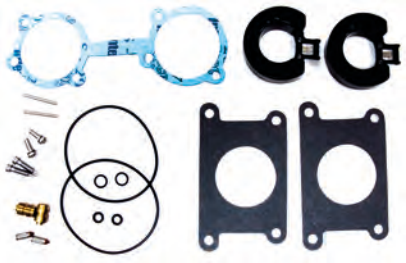

new

REF	OEM
REC6L2-W0093-00	3C8-87122-2 3G2-87122-2

M50
M15
M18

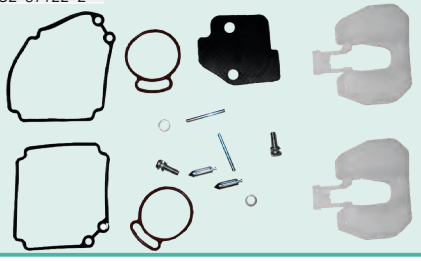

BOYAS — FLOATS — GALLEGGIANTE — FLOTTEUR DE CARBURATEUR

REF	OEM
REC162532	3C8-03125-0

M9.9D2
M15D2
M18W2
M40D2
M50D2
MF8, 9.8A-A2-A3
MFS15C
MFS20C



REF	OEM
REC16253	369-03231-0

M4B
M5B
M5BS
M6B
M8B
M9.8B



SISTEMA ELÉCTRICO
ELECTRIC SYSTEM

SISTEMA ELETTRICO
SYSTÈME ÉLECTRIQUE

SENSORES | SENSORS | SENSORE | CAPTEURS

SENSOR PRESIÓN DE ACEITE | OIL PRESURE SENSOR | SENSORE PRESIONE OLIO | CAPTEUR PRESION HUILE

REF	OEM
PAF15-07010100	3H6-07611-0

MFS4 --> MFS40 HP



SENSOR DE OXÍGENO | OXYGEN SENSOR | SENSORE OSSIGENO | SONDE À OXYGENE

REF	OEM
REC35668-ZY6-003	HZY6-35668-003

BFT150A
BFT115A



SENSOR POSICIÓN ÁRBOL DE LEVAS | CAMSHAFT SENSOR | SENSORE ALBERO A CAME | CAPTEUR DE POSITION D'ARBRE A CAMES

REF	OEM
REC37510-PNB-003	HPNB-37510-003

BFT150A
BFT115A



BOBINAS | COILS | BOBINE | BOBINES

BOBINA | COIL | BOBINA | BOBINE

REF	OEM
PAF8-05000300	3AA-06021-0

MFS8
MFS9.8



REF	OEM
REC369-06021-0	369-06021-0

M4C
M5B-BS



REF	OEM
REC3G3-06021-1	3G3-06021-1

M9.9D2
M15D2
M18E2
M25C3
M30A4



BOBINA ENCENDIDO — STARTER COIL — BOBINA AVVIAMENTO — BOBINE DÉMARREUR

REF	OEM
PAF8-05000500	3V1-06040-0 3V1060400 3V1060400M

MFS8
MFS9.8



BOBINA DE PULSACIÓN — PULSER COIL — BOBINA ACCENSIONE — BOBINE PULSEUR

REF	OEM
PAF8-05000200	3V1-06071-0

MFS8
MFS9.8



BOBINA DE IGNICIÓN — COIL IGNITION — BOBINA AVVIAMENTO — BOBINE D'ALLUMAGE

REF	OEM
REC3A0-06040-1	3A0-06040-1

M25C3
M30A4



REF	OEM
REC3G2-06040-2	3G2-06040-2

M9.9D2
M15D2
M18E2



new

REF	OEM
REC30580-ZV4-013	HZV4-30580-013

BFT75AKI
BFT90AKI

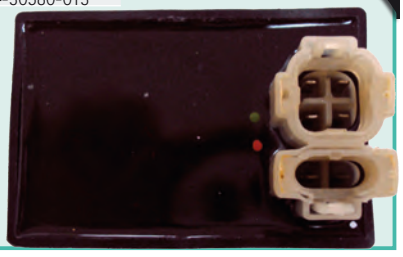

BOBINA DE CARGA — CHARGER COIL — BOBINA DI CARICA — BOBINE DE CHARGE

REF	OEM
PAF8-05090000W	3V1-06023-0

MFS8
MFS9.8



BUJÍAS SPARK CANDELE BOUGIES

2T STROKES	REF NGK	RO / OEM
M2.5/ M3.5/ 3/ 5B2	NGKBPR6HS-10	9701-1-1013
M4/ M5/ M6/ M8/ M9.8	NGKBPR7HS-10	9701-1-1014
M9.9/ M25/ M30/ 40D2	NGKBR7HS-10	9701-1-1015
MX40/ 50D3	NGKB8HS-10	9701-1-1006
MC4 through 9.8B, MX15/ 18E2	NGKBP7HS-10	9701-1-1010
M25/ 30H/ MX25	NGKB7HS-10	9701-1-1005
M50D2 Through 140A2	NGKBR8HS-10	9701-1-1110

4T STROKES	REF NGK	RO / OEM
MFS2.5 Through 30C	NGKDCPR6E	9701-1-1103
MD30/ MD40/ MD50/ MD75/ MD90	NGKIZFR6	9701-1-1111
MFS40/ 50A (Serial 046502AE +)	NGKIKR6G8	9701-1-1121
MD115A2 (TLDI)	NGKIZFR5J	9791-1-1109
BFT60A	NGKLMAR6C-9	HZZ3-31909-003



2T STROKES		REF CHAMPION
M3.5A / B		CHAL87YCC
M5B / BS		CHAL82YC
M6B		CHAL82YC
M8A / B	2Cil.	CHAL82YC
M9.9B2 / C	2Cil.	CHAL82C
B18C / D		CHAL86C
M12B		CHAL82C
M15A / B2 M15C / D	2Cil.	CHAL82C
M16		CHAL82C
M18A /C2 M18D /E	2Cil.	CHAL82C
M20		CHAL82C

2T STROKES		REF CHAMPION
B40A B30C		CHAL86C
M25C / C2	2Cil.	CHAL82C
M30A / A3	2Cil.	CHAL82C
M35A		CHAL82YC
M40C	2Cil.	CHAL82YC
M40D	3Cil.	CHAL82YC
M50C / D	3Cil.	CHAL78C
M70A / A2 M70B	3Cil.	CHAL78C
M90A	3Cil.	CHAL78C
M115A	4Cil.	CHAL78C
M140A	4Cil.	CHAL78C

4T STROKES		REF CHAMPION
MFS4	OHV	CHARA8HC
MFS5A	OHV	CHARA8HC
MFS5C	OHV	CHARA8HC
MFS9.9A	OHV	CHARA8HC
MFS15A	OHV	CHARA8HC







MOTORES DE ARRANQUE STARTERS MOTORINI AVVIAMENTO DÉMARREURS

MOTORES DE ARRANQUE STARTERS MOTORINI AVVIAMENTO DÉMARREURS

REF	OEM				2T STROKES	4T STROKES
PH130-0006	3C8-76010-1 3C8760101 3C8760101M	12V	0.6 kw	9 CCW	✔	✔

M40D2/B2
M50D2/B2
M70C
MFS9.9B2-C
MFS15B2-C
MFS18B2
MFS20C
MFS25A-B
MFS30B



REF	OEM				2T STROKES	4T STROKES
PH130-0061	350-76010-0 3AA760100				✔	✔

M15D2
M18E2
M8B
M9.8B
M9.9D2
MFS8A2
MFS9.8A2



REF	OEM				2T STROKES	4T STROKES
PH130-0048	353-76010-4			9	✔	

MD70B
MD90B
MD115A-A2
MD120A2
MD140A2



REF	OEM				2T STROKES	4T STROKES
PH130-0080	346-76010-0, 346-76010-0A0 346-76010-0M					✔

M25C3
M30A4
M40C



new

REF	OEM	2T STROKES	4T STROKES
REC31200-ZY6-003	HZY6-31200-003		✔

BFT150A
BFT115A



new

REF	OEM	2T STROKES	4T STROKES
PH130-0070	HZY3-31200-003		✔

BFT250A
BFT225A
BFT200A



CDI Y CAJAS NEGRAS — CDI & POWER PACK — CDI E CENTRALINA — CDI ET BOITIER ELECTRONIQUE

REF	OEM
REC3F0-06060-0	3F0-06060-0

M2.5A2
B3.5A2-B2



REF	OEM
REC353-06260-0	353-06260-2 353-06260-0

45A2
55B
60A
75A2



REF	OEM
REC3G2-06060-2	3G2-06060-2

M9.9D2
B15D2
M18E2



REF	OEM
REC3A106-2602M	3A106-2402M 3A106-2601M 3A106-2602M

25C2
30A3
40C



REF	OEM
PAF8-05000400	3AA-06060-00 3AA060600M

MFS8
BFS9.8



TRIM, TILT & POWER TRIM

INSTALACIÓN ELÉCTRICA / WIRING HARNESS / INSTALLAZIONE ELETTRICA / INSTALLATION ELECTRIQUE

KIT CONVERSIÓN
Sustituye de 2 a 3 cables.

CONVERSION KIT
Converts 3-wire Tilt and Trim motors to 2-Wire design

KIT CONVERSIONE
Sustituisce da 2 a 3 cavi.

KIT DE CONVERSION.
Passe un faisceau de 2 à 3 fils

REF
PH200-WH01



TRIM COMPLETO / COMPLETE TRIM ASSEMBLY / MOTORINO TRIM COMPLETO / MOTEUR DE TRIM

REF	OEM			2T STROKES	4T STROKES
PH200-T024		12V	3	2	✔

V4, V6 (1990-03)



POWER TRIM COMPLETO / COMPLETE POWER TRIM ASSEMBLY / MOTORINO POWER TRIM COMPLETO / POWER TRIM COMPLET

REF	2T STROKES	4T STROKES
REC18-6865	✔	✔

3 RAM
115-225HP

SHOWA SYSTEM



SISTEMA DE GOBIERNO
STEERING SYSTEM
SISTEMA DI GUIDA
SYSTÈME DE COMMANDE

COMPONENTES | COMPONENTS | COMPONENTI | COMPOSANT

CABLE DE ACELERADOR | THROTTLE CABLE | CAVO ACCELERATORE | CÂBLE D'ACCELERATEUR

REF	OEM
REC804898	3B2-63600-1

M6B
M8B
M9.8B

SISTEMA DE REFRIGERACIÓN
COOLING SYSTEM
SISTEMA DI RAFFREDDAMENTO
SYSTÈME DE REFROIDISSEMENT

TERMOSTATO | THERMOSTAT | TERMOSTATO | THERMOSTAT

TERMOSTATO | THERMOSTAT | TERMOSTATO | THERMOSTAT

REF	OEM	°C
REC855676002	3R3-01030-0	60°

MFS8
MFS30



new

REF	OEM	°C
REC19300-ZV5-043	HZV5-19300-043	

BFT115A
BFT130A
BFT150A



new

REF	OEM	°C
PAF15-07000031	HZW9-19300-003	

BFT90AK1
BFT75AK1
BFT60A
BFTW60A



JUNTA TERMOSTATO | THERMOSTAT, GASKET BASE | GUARNIZIONE TERMOSTATO | JOINT DE THERMOSTAT

REF	OEM
REC3T9-01032-0	3T9-01032-0

MD75C2
MD70B / C2
MD90D / C2



JUNTAS TAPA DE REFRIGERACIÓN | GASKETS EXHAUST INNER COVER | GUARNIZIONE COPERCHIO REFRIGERAZIONE | JOINT DE COUVERCLE DE REFRIGERANT

REF	OEM
REC3F3-02305-1	3F3-02305-1

M60C
M70C

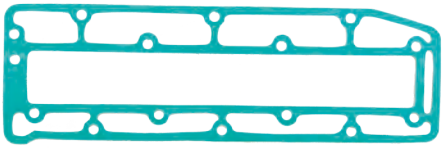

REF	OEM
REC3B7-02305-1	3B7-02305-1

MD70B
MD90D

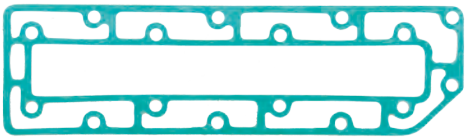

IMPULSORES | IMPELLERS | GIRANTE | TURBINES

GUÍA DE IMPULSORES | IMPELLER GUIDE | GUIDA GIRANTE | GUIDE DES TURBINES

2T STROKES	REF	OEM	CEF	A (mm)	B (mm)	C (mm)
2 / 2.5HP		369-65021-1	CEF500377	10,25	33,6	14,3
2.5A/3.5A/3.5B		309-65021-1	CEF500396	12	41	14
3.5 / 4 /5 HP		369-65021-1	CEF500377	10,25	33,6	14,3
6 / 8 / 9.8 HP	REC3B2-65021-1	3B2-65021-1	CEF500344	12,1	40	18
9.9 / 15 / 18 HP		334-65021-0	CEF500383	13,96	40,7	23,35
25 / 30 / 35 HP	REC345-65021-0	345-65021-0	CEF500382	17,12	44,1	20,25
40 / 50 HP		345-65021-1	CEF500379	17,2	50,4	20,15
60 / 70 / 90 HP	REC3B7-65021-2	3B7-65021-2	CEF500388	20,15	67,4	35,1
115 / 120 / 140 HP		3C7-65021-1	CEF500388	20,15	-67,4	35,1

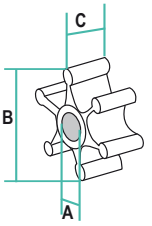

4T STROKES	REF	OEM	CEF	A (mm)	B (mm)	C (mm)
MFS4, 5, 6HP		369-65021-1	CEF500377	10,25	33,6	14,3
MFS8, 9.8 HP	REC3B2-65021-1	3B2-65021-1	CEF500344	12,1	40	18
MFS9.9, 15, 18HP		334-65021-0	CEF500383	13,96	40,7	23,35
20HP		334-65021-0	CEF500383	13,96	40,7	23,35
MFS25, 30HP	REC345-65021-0	345-65021-0	CEF500382	17,12	44,1	20,25
BFTW60A BT60A	REC19210-ZV5-003	HZV5-19210-003	CEF500338	17,20	55,90	20,20
BFT115A / 150A	REC19210-ZW1-B02	HZW1-19210-B04	CEF500337	23,35	87,80	31,00
BFT200A / 225A BFT250A	REC19210-ZY3-003	HZY3-19210-003	CEF500391	26	89,75	31,30



REC345-65021-0



REC3B2-65021-1



REC19210-ZY3-003



REC19210-ZV5-003



REC19210-ZW1-B02

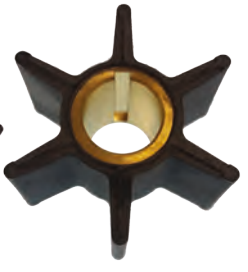

REC3B7-65021-2

BOMBA DE AGUA | WATER PUMP | POMPA ACQUA | POMPE À EAU

JUNTA BASE DE BOMBA | WATER PUMP, GASKET BASE | GUARNIZIONE BASE POMPA | JOINT, BASE DE POMPE À EAU

REF	OEM
PAF8-04000007	3B2-65025-0

MD9.9D2
MD15D2
MD18E2
MFS9.9B2-C
MFS15C
MFS18B2
MFS20C



REF	OEM
REC16159	369-65025-0

MFS4A2-B-C
MFS5A2-B-C
MFSA2-B-C



JUNTAS BOMBA | WATER PUMP GASKET | GUARNIZIONE POMPA | JOINTS DE POMPE

REF	OEM
REC3F0-65029-0	3F0-65029-6

M3.2B2
MFS2.5B
MFS3.5B
MFS2A

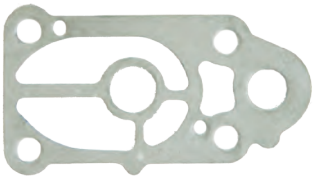

CASQUILLO INOX | INSERT CUP | GHIERA INOX | INSERT INOX

REF	OEM
REC803751	350-65011-1

M9.9D2
M15D2
M18E2
MFS9.9C, B2
MSF15C, B2
MSF20C
MSF18B2

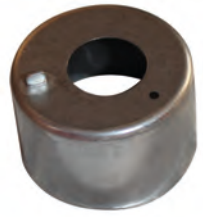

REF	OEM
PAF8-04000010	3B2-65011-0

M6
M8
M9.8B
MFS8, A - A2 -A3
MFS9.8A - A2 -A3



REF	OEM
REC16157	369-65011-0

M4B
M5B
M5B5
MFS4, 5, 6 -A2



KITS DE REPARACIÓN BOMBA DE AGUA | WATER PUMP SERVICE KITS | KIT RICAMBI POMPA ACQUA | KIT POMPE À EAU

new

REF	OEM
REC06192-ZY6-000	HZY6-06192-000

BFT150
BFT115A

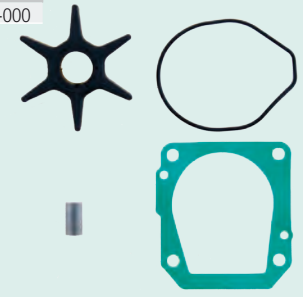

new

REF	OEM
REC06192-ZY3-000	HZY3-06192-000

BFT200A
BFT225A

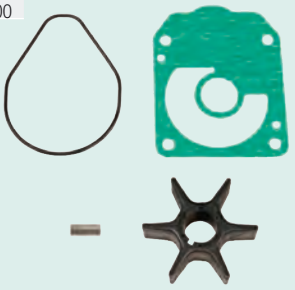

ÁNODO ANODE ANODI ANODE

ZN	(KG)	AL	(KG)	OEM
CM3C760-2181	0,51	CM3C760-2181A	0,21	3C7760-2181

60, 70, 90, 120, 140 HP



ZN	(KG)	OEM
CM3B7-60218-0	0,51	3B7-60218-1

Serie MEGA

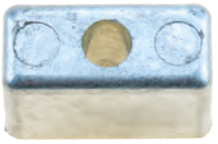

ZN	(KG)	AL	(KG)	OEM
CM5338602182A0	0,21	CM5338602182A0A	0,08	5338602182A0

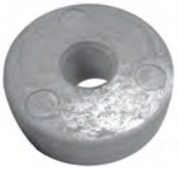

ZN	(KG)	AL	(KG)	OEM
CM3H6-60218-000	0,03	CM3H6-60218-000A	0,01	3H6-60218-0



ZN	(KG)	OEM
CM3M2-60218-1	0,05	3M2-60218-0

40, 140 HP



ZN	(KG)	OEM
CM33860-2181	0,10	338-60218-2

2.5, 3.5, 5, 6, 8 HP
15, 18, -S MAXI 25, 40 CORSA



ZN	(KG)	AL	(KG)	OEM
CM3V1-60217-0	0,10	CM3V1-60217-0A	0,04	3V1602170



ZN	(KG)	OEM
CM348-60217-0M	0,12	348-60217-0

Serie MAXI CORSA
25-40 HP



ZN	(KG)	OEM
CM3C8-60217-0	0,15	3C8-60217-1

Serie MEGA
25-50 HP



ZN	(KG)	OEM
CM3B7-602170	0,15	3B7-60217-0

60, 70, 90, 120, 140 HP



ÁNODO ANODE ANODI ANODE

ZN	(KG)	OEM
TEN01254	0,51	3C7-60218-2

Serie 60 - 70 - 90 - 120 - 140 - 150 HP



ZN	(KG)	OEM
TEN01256	0,040	3B7-60218-1

Serie MEGA



ZN	(KG)	OEM	Ø
TEN01250	0,010	338-60218-2	20 mm
TEN01251	0,020	369-60218-1	24 mm

Serie 2.5, 3.5, 5, 6, 8 HP
15 - 18-S MAXI-25 - 40 CORSA



ZN	(KG)	OEM
TEN01257	0,050	3M2-60218-0

Serie 40 - 140 HP



ZN	(KG)	OEM
TEN01258	0,020	5338602182A0

Serie 40 - 140 HP



ZN	(KG)	OEM
TEN01259	0,030	3H6-60218-0



ZN	(KG)	OEM
TEN01260	0,150	3B7-60217-0

Serie 140 HP



ZN	(KG)	OEM
TEN01253	0,150	3C8-60217-1

Serie MEGA 25 - 50 HP



ZN	(KG)	OEM
TEN01252	0,120	348-60217-0

Serie MAXI CORSA 25 - 40 HP



ZN	(KG)	OEM
TEN01255	0,320	3B7-60217-0

Serie 60 - 70 - 90 - 120 - 140 HP



new

ZN	(KG)	OEM
TEN01408	0,320	HZV4-12155-A00

BFTW60A
BFT60A
BFT200A
BFT250A
BFT225A



new

ZN	(KG)	OEM
TEN01408/1	0,320	HZV5-12155-000

BFT60A
BFT75AK1
BFT90AK1
BFT150A
BFT200A
BFT250A
BFT225A
BFT115A



PARTES DEL MOTOR
ENGINE PARTS
PARTI MOTORE
PIECES MOTEUR

DESPIECE MOTOR DE 2 TIEMPOS | ENGINE PARTS 2 STROKES | PARTI MOTORI 2 TEMPI | PIECES DE MOTEURS 2 TEMPS

2T STROKES **M4C • M5B • M5BS**

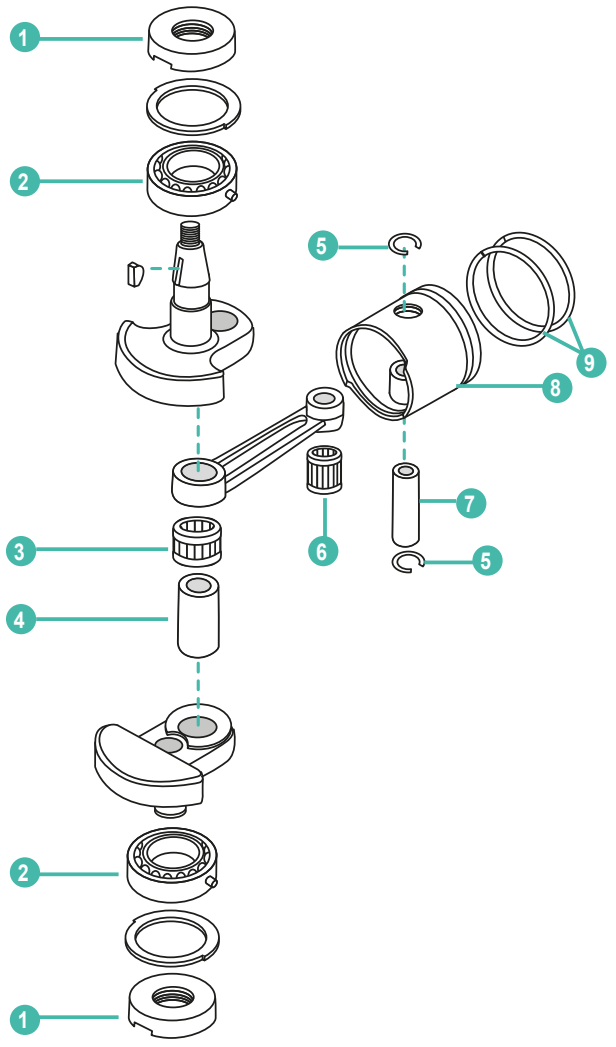

	REF	OEM					UN.
1	REC26-16051	369-00122-0	RETÉN ACEITE	OIL SEAL	PARALIO	JOINT SPI	2
2	REC30-16049	9603-3-6204	RODAMIENTO	BALL BEARING	CUSCINETTO	ROULEMENT	2
3	REC31-813048	369-00043-0	COJINETE DE AGUJA	NEEDLE BEARING	CUSCINETTO	ROULEMENT	1
4	REC813046002	369-00061-0	PIN	CRANK PIN	SPINOTTO	PIN	1
5	REC53-16057	350-00024-1	CLIP	CLIP	CLIP	CLIP	2
6	REC31-16052	350-00042-0	COJINETE DE AGUJA	NEEDLE BEARING	CUSCINETTO	ROULEMENT	1
7	REC41-16056	369-00021-0	PIN	PISTON PIN	SPINOTTO	AXE DE PISTON	1
8	REC779-9615T	369-00001-0	PISTÓN **STD**	PISTON **STD**	PISTONE **STD**	PISTON **STD**	1
9	REC8M0080357	351-00011-0	KIT SEGMENTOS	PISTON RING KIT	KIT FASCIA	KIT DE SEGMENTS	2

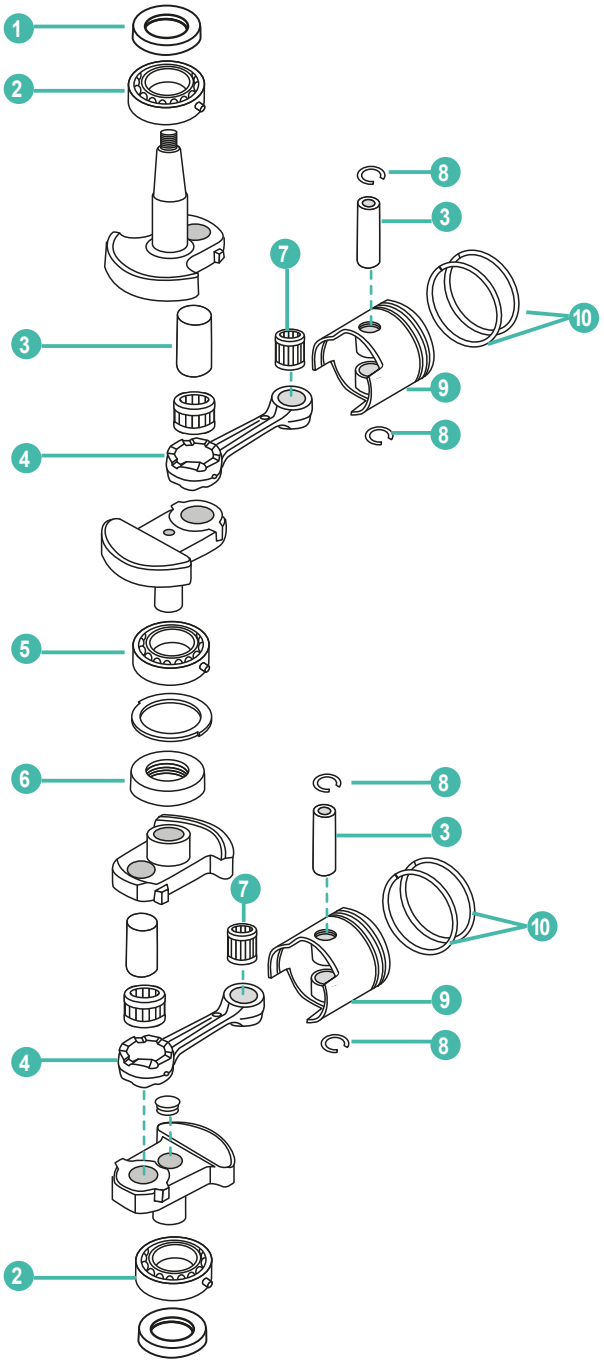

	REF	OEM					UN.
1	REC26-803514	101-00121-0	RETÉN ACEITE	OIL SEAL	PARALIO	JOINT SPI	1
2	REC30-16049	9603-3-6204	RODAMIENTO	BALL BEARING	CUSCINETTO	ROULEMENT	2
3	REC41-8036801	3B2-00021-0	PIN	PISTON PIN	SPINOTTO	AXE DE PISTON	2
4	REC629-8036741	3B2-00040-0	BIELA	CONNECTING ROD	BIELLA	BIELLE	2
5	REC30-16049	9603-3-6204	RODAMIENTO	BALL BEARING	CUSCINETTO	ROULEMENT	1
6	REC26-85370711	3B2-00051-0	RETÉN ACEITE	OIL SEAL	PARALIO	JOINT SPI	1
7	REC31-8036752	338-00042-0	COJINETE DE AGUJA	NEEDLE BEARING	CUSCINETTO	ROULEMENT	2
8	REC53-16057	350-00024-1	CLIP	CLIP	CLIP	CLIP	2
9	REC779-804886	3B2-00001-0	PISTÓN **STD**	PISTON **STD**	PISTONE **STD**	PISTON **STD**	2
10	REC39-803678A3	3B2-00011-0	KIT SEGMENTOS	PISTON RING KIT	KIT FASCIA	KIT DE SEGMENTS	4

2T STROKES M9.9D • M15D2 • M18E2

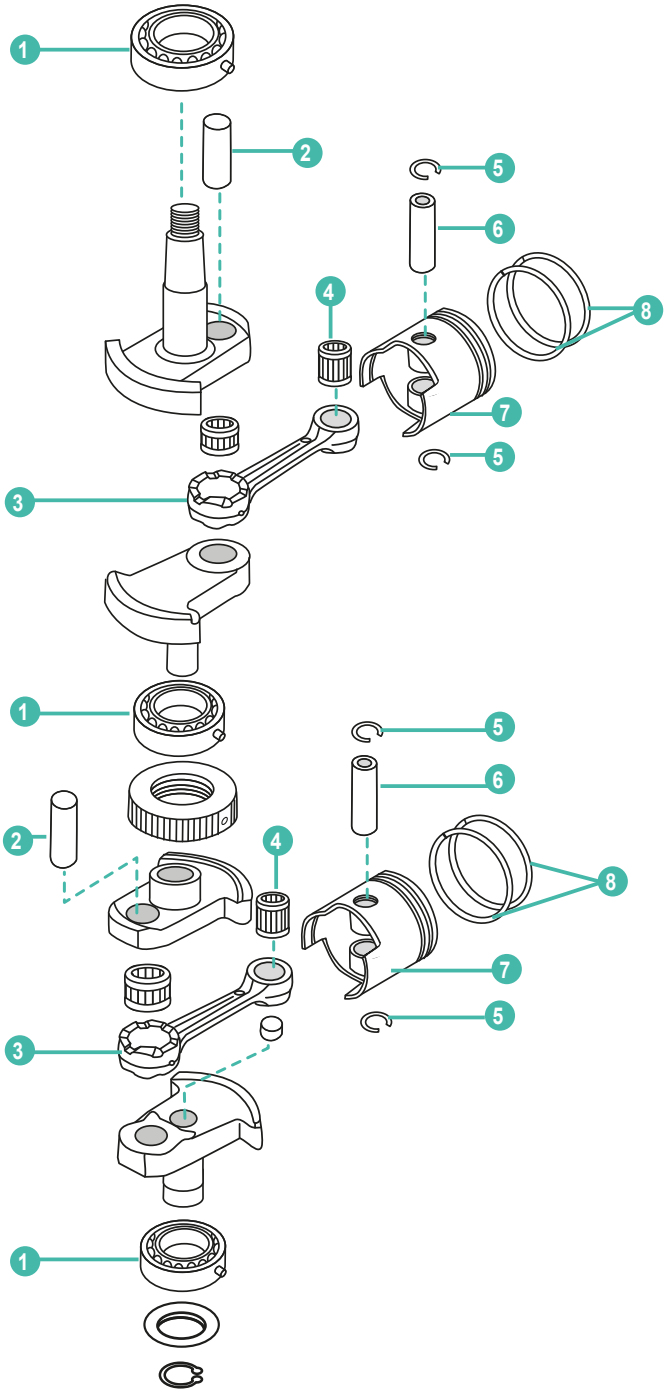

	REF	OEM					UN.
1	REC30-160494	96603-3-6305	RODAMIENTO	BALL BEARING	CUSCINETTO	ROULEMENT	3
2	REC803673	350-00061-0	PIN	CRANK PIN	SPINOTTO	PIN	2
3	REC629-803674	350-00040-0	BIELA	CONNECTING ROD	BIELLA	BIELLE	2
4	REC31-16052	350-00042-0	COJINETE DE AGUJA	NEEDLE BEARING	CUSCINETTO	ROULEMENT	2
5	REC53-16057	350-00024-1	CLIP	CLIP	CLIP	CLIP	4
6	REC41-803680002	350-00021-0	PIN 18 HP	PISTON PIN 18 HP	SPINOTTO 18 HP	AXE DE PISTON 18 HP	2
	REC41-825713002	332-00021-0	PIN 9.9 / 15 HP	PISTON PIN 9.9 / 15 HP	SPINOTTO 9.9 / 15 HP	AXE DE PISTON 9.9 / 15 HP	2
7	REC779-803677T02	351-00001-1	PISTÓN STD, 9.9 / 15 HP	PISTON STD 9.9 / 15 HP	PISTONE STD 9.9 / 15 HP	PISTON STD 9.9 / 15 HP	1
	REC779-803677	350-00001-1	PISTÓN STD 18 HPP	PISTON STD HP	PISTONE STD 18 HP	PISTON STD 18 HP	1
8	REC39-803678A1	350-00011-0	KIT SEGMENTOS 18 HP	PISTON RING KIT18 HP	KIT FASCIA 18 HP	KIT DE SEGMENTS 18 HP	2
	REC8M0080357	351-00011-0	KIT SEGMENTOS 9.9 / 15 HP	PISTON RING KIT 9.9 / 15 HP	KIT FASCIA 9.9 / 15 HP	KIT DE SEGMENTS 9.9 / 15 HP	2

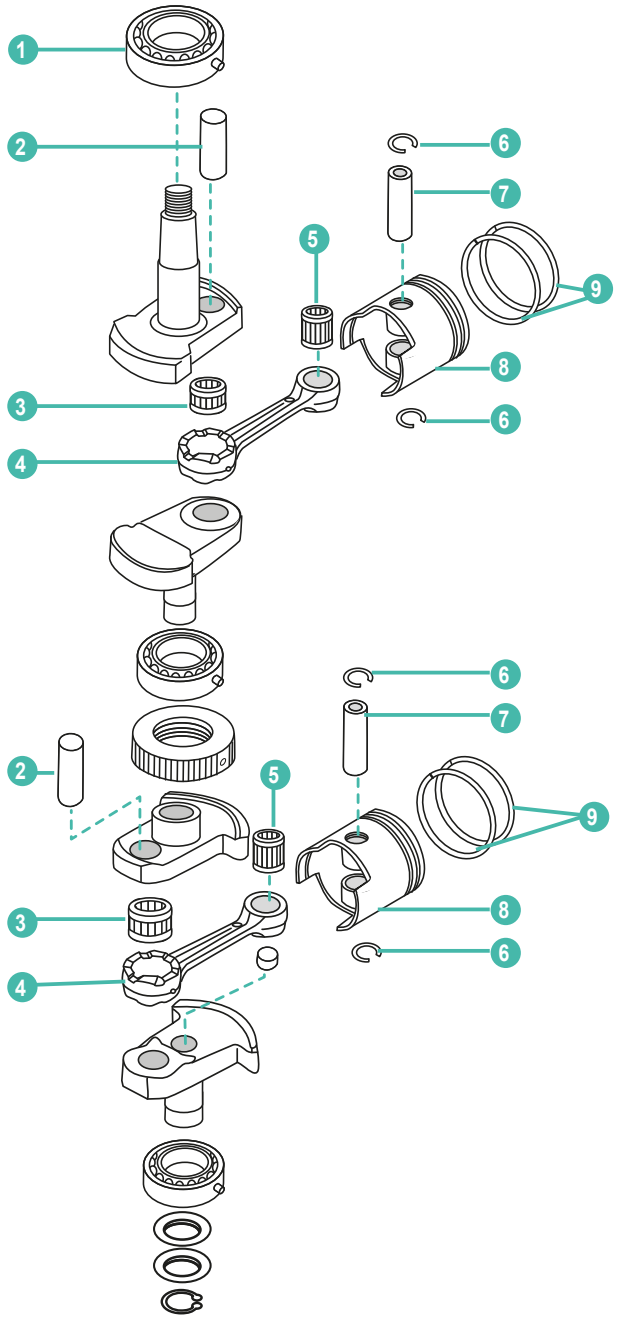

	REF	OEM					UN.
1	REC30-16049T01	345-00113-0	RODAMIENTO	BALL BEARING	CUSCINETTO	ROULEMENT	1
2	REC8130461	334-00061-0	PIN	CRANK PIN	SPINOTTO	PIN	2
3	REC31-8130482	356-00043-0	COJINETE DE AGUJA	NEEDLE BEARING	CUSCINETTO	ROULEMENT	2
4	REC629-813047T01	336-00040-1	BIELA	CONNECTING ROD	BIELLA	BIELLE	2
5	REC345-00042-0	345-00042-0	COJINETE DE AGUJA	NEEDLE BEARING	CUSCINETTO	ROULEMENT	1
6	REC53-16057	334-00024-1	CLIP	CLIP	CLIP	CLIP	4
7	REC41-803680003	3C8-00021-0	PIN	PISTON PIN	SPINOTTO	AXE DE PISTON	2
8	REC779-879194T01	346-00001-1	PISTÓN **STD**	PISTON **STD**	PISTONE **STD**	PISTON **STD**	2
9	REC39-16054A5	346-00011-0	KIT SEGMENTOS	PISTON RING KIT	KIT FASCIA	KIT DE SEGMENTS	4

2T STROKES M40D2 • M50D2

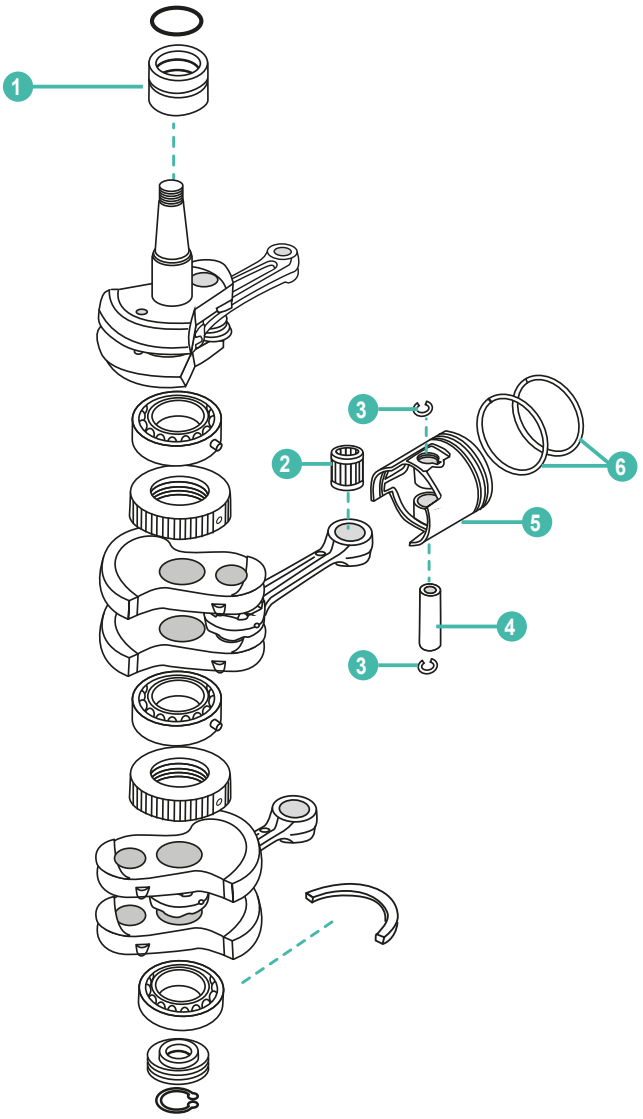

	REF	OEM					UN.
1	REC31-855553	3C8-00113-0	RODAMIENTO SUP.	MAIN BEARING UPPER	CUSCINETTO SUPERIORE	ROULEMENT SUPERIEUR	1
2	REC345-00042-0	345-00042-0	COJINETE DE AGUJA	NEEDLE BEARING	CUSCINETTO	ROULEMENT	3
3	REC53-16057	334-00024-1	CLIP	CLIP	CLIP	CLIP	6
4	REC41-16056	3C8-00021-0	PIN	PISTON PIN	SPINOTTO	AXE DE PISTON	3
5	REC779-9615T	3C8-00001-3	PISTÓN **STD**	PISTON **STD**	PISTONE **STD**	PISTON **STD**	3
6	REC8M0080349	346-00011-0	KIT SEGMENTOS	PISTON RING KIT	KIT FASCIA	KIT DE SEGMENTS	6

4T STROKES **MFS8 • MFS9.9**

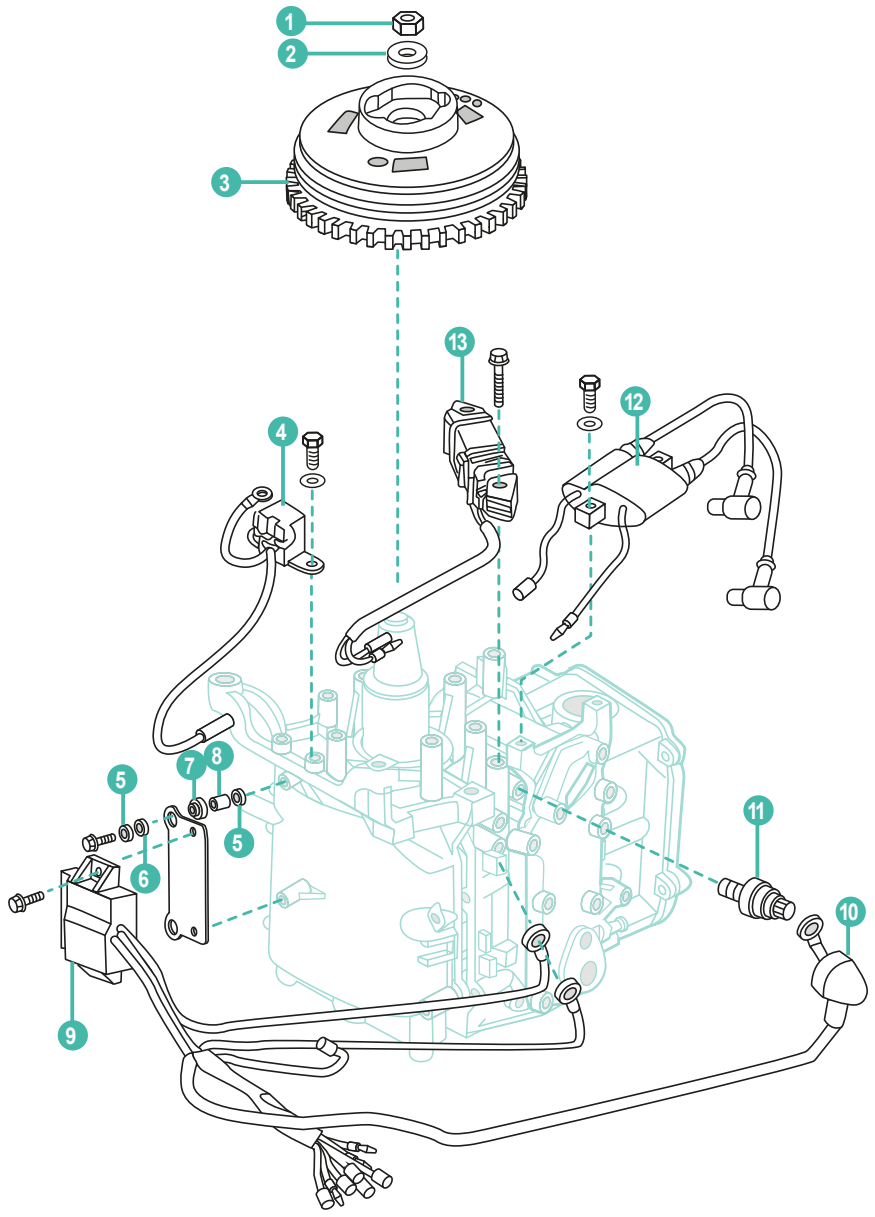

	REF	OEM				
1	PAF8-05000024	369-00132-0	TUERCA	NUT, FLYWHEEL	DADO	ÉCROIU
2	PAT15-04000011	940121-1200	ARANDELA	WASHER, FLYWHEEL NUT	RONDELLA	RONDELLE
3	PAF8-05000600	3AA-06091-0	EJE DE VOLANTE	FLYWHEEL ASSY	ASSE VOLANTE	VOLANT MOTEUR
4	PAF8-05000200	3V1-06071-0	BOBINA PULSACIÓN	COIL PULSER	BOBINE ACCENSIONE	BOBINE PULSEUR
5	PAF8-05000021	3R0-66308-0	ARANDELA	WASHER	RONDELLA	RONDELLE
6	PAF8-05000007	3B7-06305-0	AMORTIGUADOR (A)	ABSORBER (A) CDI	CUSCINO (A)	SILENT BLOC (A)
7	PAF8-05000011	3T5-06920-0	AMORTIGUADOR (B)	ABSORBER (B) CDI	CUSCINO (B)	SILENT BLOC (B)
8	PAF8-05000006	3A0-76079-0	MANGUERA	TUBE	TUBO	DURITE
9	PAF8-05000400	3AA-06060-0	CDI	CDI	CDI	CDI
10	PAF15-07010101	3H6-07612-0	AISLANTE	JACKET INSULATION	ISOLANTE	ISOLANT
11	PAF15-07010100	3H6-07611-0	SENSOR PRESIÓN ACEITE	OIL PRESSURE SENSOR	SENSORE PRESSIONE OLIO	SONDE DE PRESSION D'HUILE
12	PAF8-05000500	3V1-06040-0	BOBINA ENCENDIDO	STARTER COIL ASSY	BOBINA AVVIAMENTO	BOBINE DÉMARREUR
13	PAF8-05000300	3AA-06021-0	BOBINA	COIL	BOBINE	COIL

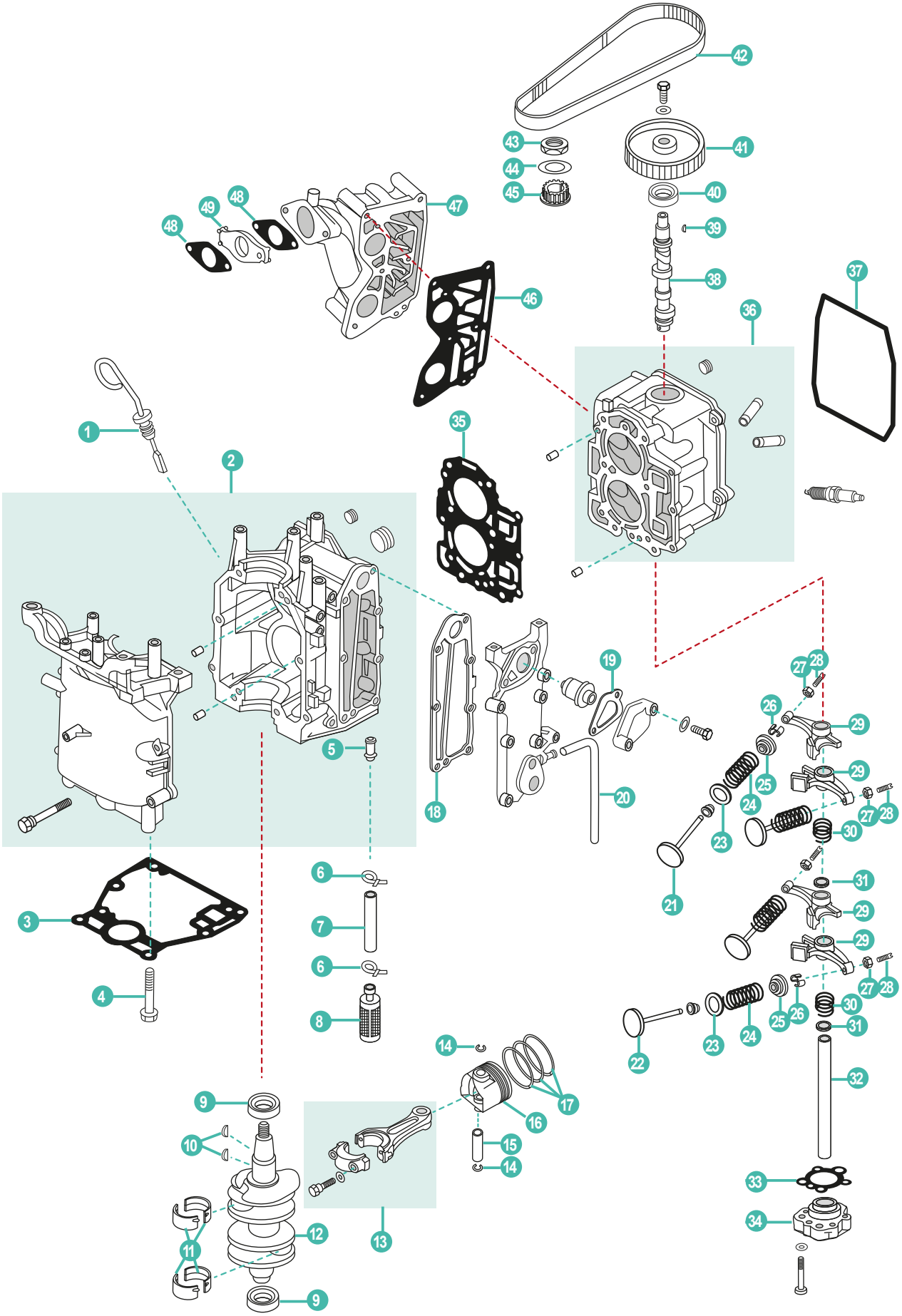
1
2
3
4
5
6
7
8
9
10
11
12
13
14
15
16
17
18
19
20
21
22
23
24
25
26
27
28
29
30
31
32
33
34
35
36
37
38
39
40
41
42
43
44
45
46
47
48
49

	REF	OEM				
1	PAF8-00000200	3V1-07421-0	MEDIDOR NIVEL ACEITE	OIL LEVEL GAUGE	MISURATORE LIVELLO OLIO	JAUGE D'HUILE
2	PAF8-05010000	3V1B01100-0	BLOQUE COMPLETO	CRANKCASSE ASSY	BLOCCO MOTORE	MOTEUR COMPLET
3	PAF8-00000004	3V1-01303-0	JUNTA BASE MOTOR	GASKET, ENGINE BASEMENT	GUARNIZIONE BASE MOTORE	JOINT, BASE DE MOTEUR
4	PAF8-00000003	3R3-61017-0	TORNILLO M8x35	BOLT M8x35	VITE M8x35	VIS M8x35
5	PAF8-05010002	3H8-02093-0	RACORD	NIPPLE	RACCORDO	RACORD
6	PAF8-05000025	369-84398-0	CLIP	HOOP	CLIP	CLIP
7	PAF8-05000017	98AH10-0120	MANGUERA	HOSE	TUBO	DURITE
8	PAF8-05000800	3V1-07410-0	FILTRO ACEITE	OIL STRAINER	FILTRO OLIO	FILTRE A HUILE
9	PAF8-05010012	3V1-00121-0	RETÉN ACEITE	OIL SEAL	PARAOLIO	JOINT SPI
10	PAF4-04000019	3T5-10131-0	CHAVETA	KEY	CHIAVETTA	CLAVETTE
11	PAF8-05010009	3V1-07407-0	COJINETE	BUSH	BRONZINA	ROULEMENT
12	PAF8-05020001	3V1-00030-1	CIGÜEÑAL	CRANK	ALBERO MOTORE	VILEBREQUIN
13	PAF8-05020200	3V1-00040-0	BIELA	CONNENCTING ROD	BIELLA	BIELLE
14	PAF15-07020005	350-00024-1	CLIP	CIRCLIP	CLIP	CLIP
15	PAF8-05020105	332-00021-0	PIN	PIN, PISTON	SPINNOTO	AXE DE PISTON
16	PAF8-05020101	3V1-00001-0	PISTON	PISTON	PISTONE	PISTON
17	REC39-8M0055809	3V1-00011-0	KIT SEGMENTOS	PISTON RING KIT	KIT FASCIA	KIT DE SEGMENTS
18	PAF8-05010004	3V1-02305-0	JUNTA ESCAPE	GASKET, EXHAUST COVER	GUARNIZIONE SCARICCO	JOINT D'ECHAPPEMENT
19	PAF8-05010005	346-01032-0	JUNTA TERMOSTATO	GASKET, THERMOSTAT COVER	GUARNIZIONE TERMOSTATO	JOINT DE THERMOSTAT
20	PAF8-05000024	98AB-5-0330	TUBO	WATER PIPE	TUBO	DURITE
21	PAF8-05030001	3V1-07201-0	VÁLVULA ADMISIÓN	VALVE INTAKE	VALVOLA ASPIRAZIONE	SOUPAPE D'ADMISSION
22	PAF8-05030002	3V1-07202-0	VÁLVULA ESCAPE	VALVE EXHAUST	VALVOLA SCARICO	SOUPAPE D'ECHAPPEMENT
23	PAF8-05030004	3V1-07205-0	ASIENTO MUELLE	SEAL, VALVE SPRING	SIGILLO MOLLA	SIEGE RESSORT DE SOUPAPE
24	PAF8-05030005	3AA-07203-0	MUELLE VÁLVULA	SPRING VALVE	VALVOLA MOLLA	RESSORT DE SOUPAPE
25	PAF8-05030006	3V1-07221-0	RETEN RESORTE	RETAINER, VALVE SPRINGER	VALVOLA DI RITEGNO	JOINT DE RESSORT
26	PAF8-05030007	3H6-07223-0	SEGURO DE VÁLVULA	CLAMP, VALVE	BLOCCAGGIO DI VALVOLA	CLAVETTE DE SOUPAPE
27	PAF15-07040304	3H8-07237-0	TUERCA	LOCK NUT	GHIERA	ÉCROU
28	PAF15-07040303	3R0-07238-0	TORNILLO AJUSTE	SCREW, VALVE ADJUSTING	VITE	VIS
29	PAF8-05030200	3V1-07235-0	BALANCÍN	ROCKER	BILANCERE	CULBUTEUR
30	PAF8-05030009	3AA-07225-0	MUELLE	SPRING ROCKER	MOLLA	RESSORT
31	PAF8-05030015	3R3-07227-0	ARANDELA	BUSHER, ROCKER SPRING	RONDELLA	RONDELLE
32	PAF8-005030010	3H8-07226-0	EJE	SHAFT ROCKER	ASSE	AXE DE CULBUTEUR
33	PAF8-05030012	3V1-07653-0	JUNTA BOMBA ACEITE	OIL PUMP GASKET	GUARNIZIONE POMPA OLIO	JOINT POMPE
34	PAF8-05030300	3V1-07600-0	BOMBA ACEITE	OIL PUMP	POMPA OLIO	POMPE À HUILE
35	PAF8-05000100	3V1-02305-0	JUNTA CULATA	CYLINDER HEAD GASKET	GUARNIZIONE TESTATA	JOINT DE CULASSE
36	PAF8-05030100	3V1B01001-0	CULATA	CYLINDER HEAD ASSY	TESTATA	CULASSE
37	PAF8-05000002	3V1-01024-0	JUNTA TAPA CULATA	CYLINDER HEAD COVER GASKET	GUARNIZIONE COPERCHIO TESTATA	JOINT COUVERCLE
38	PAF8-05030008	3V1-07010-0	ÁRBOL DE LEVAS	CRAMSHAFT	ALBERO MOTORE	ARBRE À CAMES
39	PAT3.6-04000006	309-00131-0	CHAVETA	KEY	CHIAVETTA	CLAVETTE
40	PAF8-05030011	3H8-07025-0	RETÉN ACEITE	OIL SEAL 18x35x7.8 mm	PARAOLIO	JOINT SPI
41	PAF8-05030400	3H8-10062-2	POLEA	DRIVER PULLEY	PULEGGIA	POULIE
42	PAF8-05000004	3V1-10045-0	CORREA	TIMING BELT	CINGHIA DI DISTRIBUZIONE	COURROIR DISTRIBUTION
43	PAF8-05010016	3V1-10068-0	TUERCA	NUT	DADO	ÉCROU
44	PAF8-05010015	3V1-10063-0	ARANDELA	BELT GUIDER	RONDELLA	RONDELLE
45	PAF8-05010014	3V1-10060-0	POLEA	DRIVER PULLEY	PULEGGIA	POULIE
46	PAF8-05000009	3V1-02104-0	JUNTA COLECTOR	GASKET MANIFOLD	GUARNIZIONE COLLETTORE	JOINT DE COLLECTEUR
47	PAF8-05000008	3V1-02010-1	COLECTOR ADMISIÓN	INTAKE MANIFOLD	COLLETTORE ASPIRAZIONE	COLLECTEUR D'ADMISSION
48	PAF15-07000017	3V1-02011-0	JUNTA CARBURADOR	GASKET CARBURETOR	GUARNIZIONE CARBURATORE	JOINT CARBURATEUR
49	PAF15-07000018	3V1-03952-0	SEPARADOR, CARBURADOR	INSULATOR, CARBURETOR	ISOLANTE, CARBURATORE	ISOLANT CARBURATEUR

4T STROKES MFS8 • MFS9.9

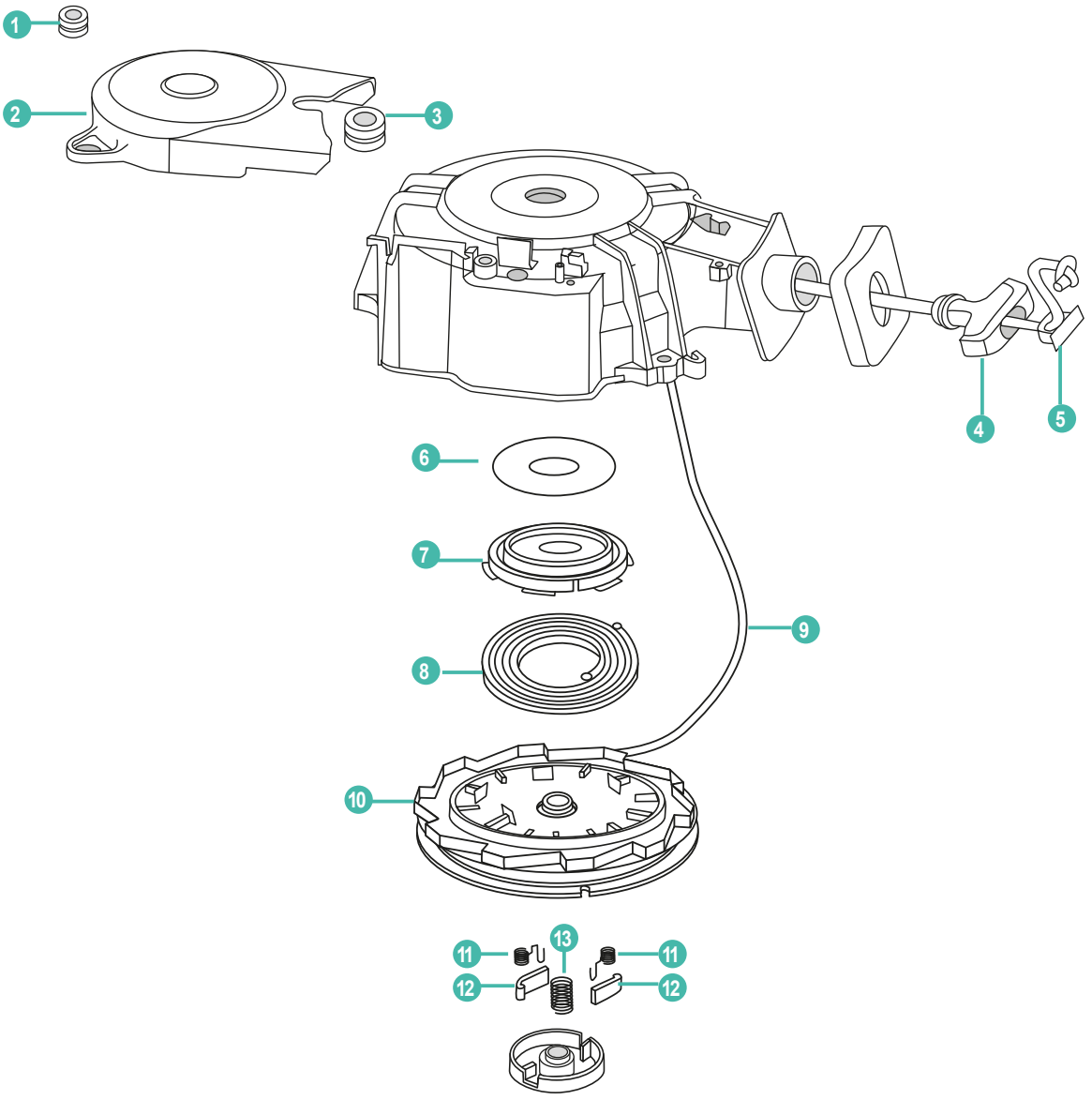

	REF	OEM				
1	PAF8-05000003	172-36008-0	RETÉN	RUBBER GROMMET A	TENUTA	JOINT
2	PAF8-05000012	3V1-06308-0	TAPA	COVER, STRAP	COPERCHIO	COUVERCLE
3	PAF8-05000013	3V1-06302-0	RETÉN	RUBBER GROMMET B	TENUTA	JOINT
4	PAF4-04130101	3AA-05019-0	TIRADOR	HANDLE, STARTER	MANIGLIA AVVIAMENTO	POIGNEE DE LANCEUR
5	PAF4-04130102	3R1-05131-0	TAPA	COVER, HANDLE	COPERCHIO	COUVERCLE
6	PAF8-05050002	3V1-05259-0	ARANDELA	WASHER, THRUST	RONDELLA	RONDELLE
7	PAF8-05050003	3R1-05125-0	MUELLE	SPRING CASE	MOLLA	RESSORT
8	PAF8-05050004	3AA-05004-0	MUELLE	VOLUTE SPRING	MOLLA	RESSORT
9	PAF8-05050018	3AA-05013-0	CUERDA	START LINE	CORDA DI AVVIAMENTO	CORDE DE LANCEUR
10	PAF8-05050005	3V1-05104-1	VOLANTE	WHELL, START-UP	VOLANTE	VOLANT
11	PAF8-05050007	3R1-05012-0	MUELLE	SPRING, TENSIÓN	MOLLA	RESSORT
12	PAF8-05050006	3R1-05003-1	UÑA PLÁSTICA	PAWL, DRIVE	NOTTOLINO	CLIQUET
13	PAF8-05050009	3R1-05007-0	MUELLE	SPRING PLATE	MOLLA	RESSORT

JUNTAS DE MOTOR 4 TIEMPOS / ENGINE GASKET 4 STROKES / GUARNIZIONI MOTORE 4 TEMPI / JOINTS DE MOTEUR 4 TEMPS

JUNTAS DE CULATA / CYLINDER HEAD GASKET / GUARNIZIONE DE TESTATA / JOINT DE CULASSE

REF	OEM
REC309-01005-2	309-01005-2

M2.5
M2.5A
M2.5A2
M3.5A
M3.5A2



REF	OEM
REC346-01005-0	346-01005-0

M25C3
M30A4



REF	OEM
REC3B2-01005-0	3B2-01005-0

M6B
M8B
M9.8B

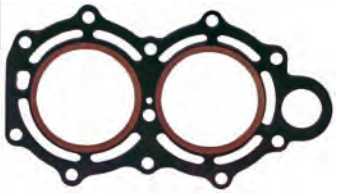

REF	OEM
REC3C8-01005-4	3C8-01005-4

M40D2
M50D2



REF	OEM
REC351-01005-0	351-01005-0

M9.9D
M15D
M9.9D2
M15D2



REF	OEM
REC3F3-01005-0	3F3-01005-0

M60C
M70C



REF	OEM
REC350-01005-0	350-01005-0

M18E2



REF	OEM
REC3T9-01005-0	3T9-01005-0

MD70
MD90

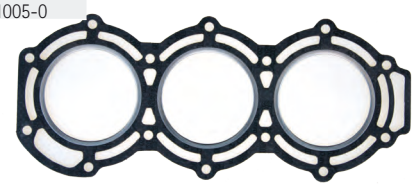

KITS JUNTAS DE CULATA / CYLINDER HEAD GASKET KIT / KIT GUARNIZIONE TESTATA / KITS JOINTS MOTEUR

REF	OEM
REC3T5-87121-6	3T5-87121-6

MD40B2
MD50B2

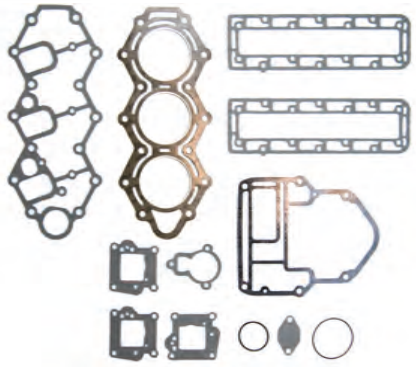

REF	OEM
REC3B7-87121-1	3B7-87121-7

M80A
M90A

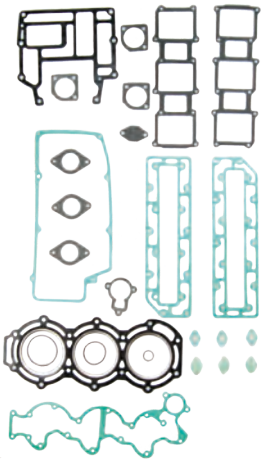

JUNTAS DE CULATÍN / GASKET, HEAD COVER / GUARNIZIONE COPERCHIO TESTA / JOINTS DE COUVRE CULASSE

REF	OEM
REC3C8-01024-0	3C8-01024-0

M40D2
M50D2



REF	OEM
REC3F3-01024-0	3F3-01024-0

M60C
M70C



JUNTAS BASE DE MOTOR — CYLINDER GASKET

GUARNIZIONE BASE MOTORE — JOINTS DE TÊTE MOTRICE

REF	OEM
REC350-01303-0	350-01303-0

M9.9D2
M15D2
M18E2

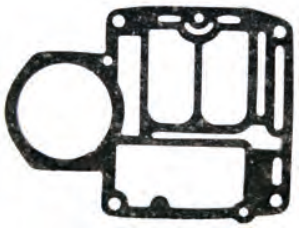

REF	OEM
REC3C8-01303-4	3C8-01303-4

MD40B
MD50B

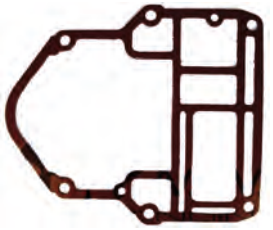

REF	OEM
REC350-61012-1	350-61012-1

M9.9D2
M15D2
M18E2

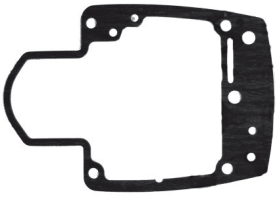

REF	OEM
REC3F3-01303-1	3F3-01303-1

M60C
M70C

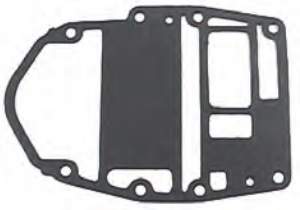

REF	OEM
REC346-01303-0	350-01303-0

M25C3
M30A4

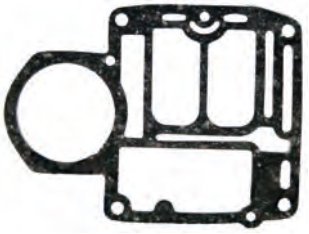

REF	OEM
REC3B2-01303-0	3B2-01303-0

M6B
M8B
M9.8B

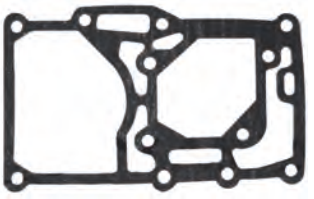

RETENES DE ACEITE — OIL SEALS

PARAOLIO — JOINT SPI

RETÉN DE ACEITE — OIL SEAL

PARAOLIO — JOINT SPI

REF	OEM	
REC26-8537072	346-01215-0	18 x 28 x 6 mm

M25C3
M30A4
MFS25A-B
MFS30A-B
MFS40A
MFS50A



REF	OEM	
REC26-161301	346-60111-0	18 x 28 x 8 mm

M25C3
M30A4
MFS30A - B
MFS25A - B



REF	OEM	
REC26-161622	346-65013-0	17 x 30 x 9 mm

M15D2
M18E2
M25C3
M30A4
M9.9D2

MFS20C
MFS18B2
MFS15C-B2
MFS30B-A
MFS25A-B
MFS20C
MFS9.9B2-C



REF	OEM	
REC26-803667	350-00121-0	25 x 45 x 8 mm

M9.9D2
M15D2
M18E2



REF	OEM	
REC8M0065585	350-01215-5	25 x 69 x 9,5 mm

M9.9D2
M15D2
M18E2

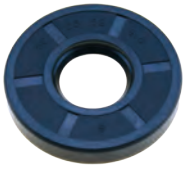

REF	OEM	
REC26-16703	369-01215-0	10 x 62 x 7 mm

M4C
M5B
M5BS
MFS4A-B / 5A-B-C / 6A-B-C



REF	OEM	
REC26-16162	369-60223-0	10 x 24 x 8 mm

M4C
M5B
M5BS
MFS4A-B / 5A-B-C / 6A-B-C



CIGÜEÑAL | CRANKSHAFT | ALBERO MOTORE | VILEBREQUIN

RODAMIENTOS DE CIGÜEÑAL | CRANKSHAFT BEARINGS | CUSCINETTI ALBERO MOTORE | ROULEMENTS VILEBREQUIN

SUPERIOR | UPPER | SUPERIORE | SUPERIEUR

REF	OEM
REC30-898101936	9643-3-6004

M2.5A
M3.5A-B



INFERIOR | UNDER | INFERIORE | INFERIEUR

REF	OEM
REC30-95307	9643-3-6202

M2.5A
M3.5A-B



PISTONES | PISTONS | PISTONI | PISTONS

KITS DE PISTONES | PISTON KITS | KIT PISTONE | KIT PISTON

	STD REF	STD OEM
	REC779-803677	350-00001-0
	REC8M0080357	351-00011-0
	REC629-803674	350-00040-0
	REC41-825713002	332-00021-0
	REC53-16057	350-00024-1
	REC31-16052	350-00042-0

M9.9D2
M15D2 (2 Cyl)



	STD REF	STD OEM
	REC779-9615T	369-00001-0
	REC8M0080357	351-00011-0
	REC41-16056	369-00021-0
	REC53-16057	350-00024-1
	REC31-16052	350-00042-0

M4C
M5B
M5BS (1 Cyl)



	STD REF	STD OEM
	REC779-803677T02	351-00001-1
	REC629-803674	350-00040-0
	REC41-803680002	350-00021-0
	REC53-16057	350-00024-1
	REC31-16052	350-00042-0

M18E2 (2 Cyl)



	STD REF	STD OEM
	REC779-804886	3B2-00001-0
	REC39-803678A3	3B2-00011-0
	REC629-8036741	3B2-00040-0
	REC41-8036801	3B2-00021-0
	REC53-16057	350-00024-1
	REC31-8036752	338-00042-0

M6B
M8B
M9.8B (2 Cyl)



	STD	
	REF	OEM
	REC779-879194T01	346-00001-1
	REC39-16054A5	346-00011-0
	REC629-813047T01	336-00040-1
	REC41-803680003	3C8-00021-0
	REC53-16057	350-00024-1
	REC345-00042-0	345-00042-0

M25C3
M30A4 (2 Cyl)



	STD	
	REF	OEM
	REC779-96152	3C8-00001-3
	REC8M0080349	356-00011-0 346-00011-0
	REC629-8036741	3B2-00040-0
	REC41-803680003	3C8-00021-0
	REC53-16057	334-00024-1
	REC345-00042-0	345-00042-0

M40D2
M50D2 (3 Cyl)



	STD	
	REF	OEM
	PAF8-05020101	3V1-00001-0
	PAF8-05020200	3V1-00040-0
	PAF8-05020105	332-00024-0
	PAF15-07020005	350-00024-1

MFS8
MFS9.8A-A2-A3 (2 [illegible])







SISTEMA DE ESCAPE Y ADMISIÓN
EXHAUST & INTAKE SYSTEM
SISTEMA DI SCARICO E ASPIRAZIONE
SYSTÈME D'ECHAPPEMENT ET D'ADMISSION

SISTEMA DE ESCAPE | EXHAUST SYSTEM | SISTEMA SCARICO | SYSTÈME D'ECHAPPEMENT

JUNTAS DE ESCAPE | GASKET, EXHAUST | GUARNIZIONE SCARICO | JOINTS D'ECHAPPEMENT

REF	OEM
REC3C8-02305-0	3C8-02305-0

M40D2 / B
M50D2 / B

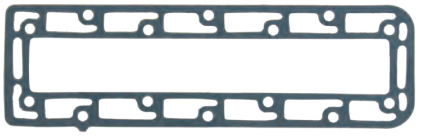

SISTEMA DE ADMISIÓN | INTAKE SYSTEM | SISTEMA ASPIRAZIONE | SYSTÈME D'ADMISSION

JUNTAS DE ADMISIÓN | GASKET, INTAKE | GUARNIZIONE ASPIRAZIONE | JOINTS D'ADMISSION

new

REF	OEM
REC17109-ZY6-000	HZY6-17109-000

BFT90AK1
BFT75AK1
BFT115A
BFT150A



REF	OEM
REC3C8-02104-0	3C8-02104-0

M40D2
M50D2

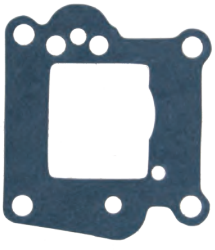

REF	OEM
REC3T9-02104-0	3T9-02104-0

MD70B
MD90B

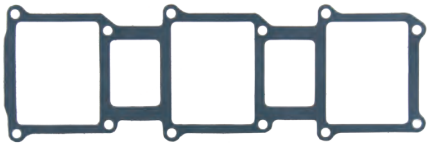

REF	OEM
REC3F3-02104-0	3F3-02104-0

M60C
M70C

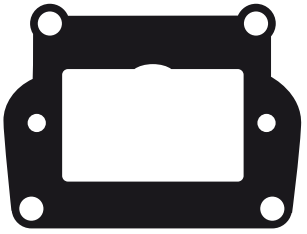

DESPIECE COLAS | GEAR CASE PARTS | PARTI PIEDI | PIECES D'EMBASES

4T STROKES MFS8 • MFS9.8

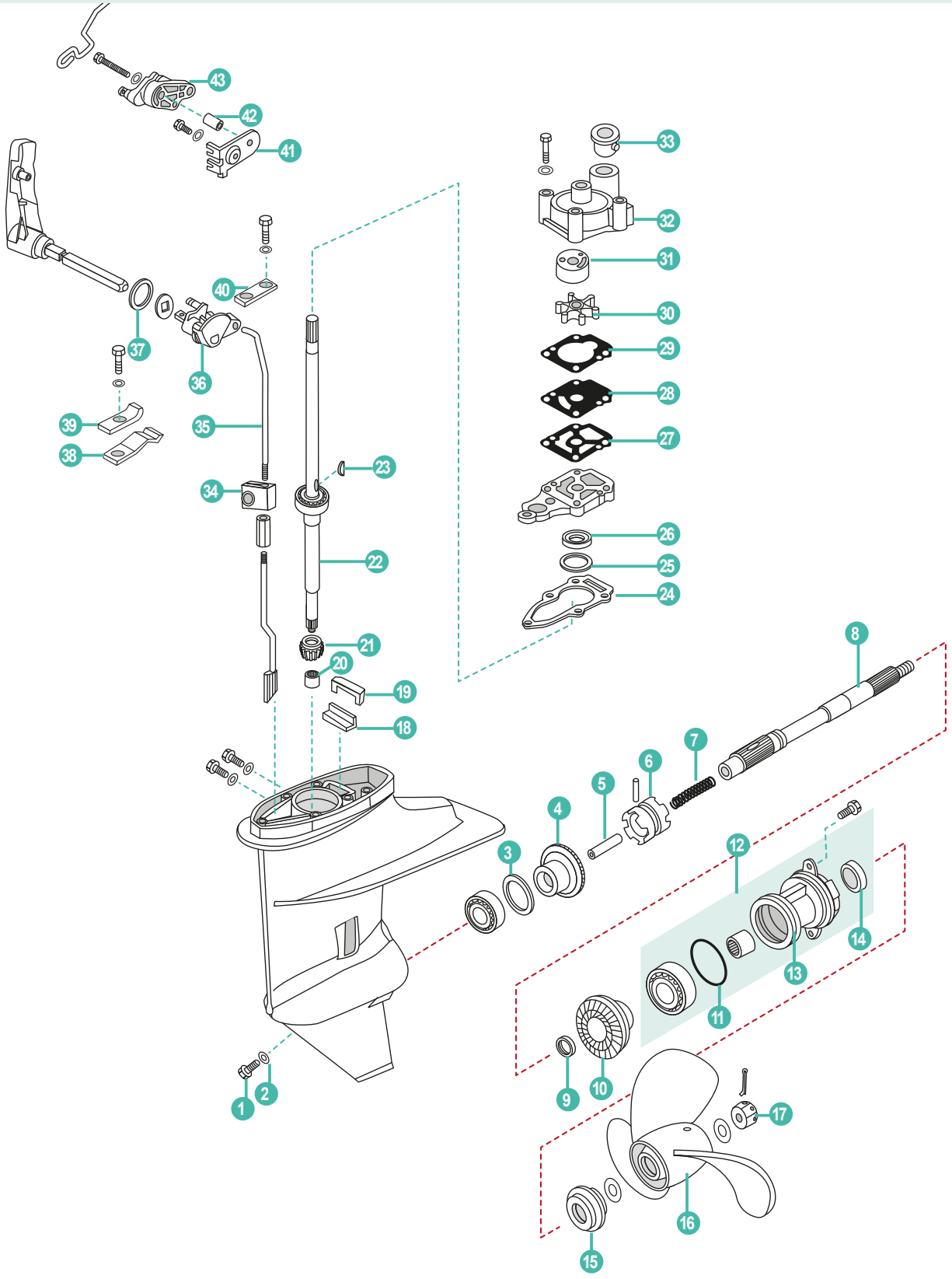

	REF	OEM				
1	REC90340-08002	332-60005-2	TAPÓN DRENAJE	PLUG, OIL HOSE	CONNETTORE	BOUCHON DE VIDANGE
2	REC90430-08020	332-60006-0	JUNTA	GASKET	GUARNIZIONE	JOINT
3	PAF8-04000012-1	369-64014-0	GRUESO 0.10mm	SHIM 0.10mm	SPESSORE 0.10mm	CALE 0.10 mm
	PAF8-04000012-2	369-64015-0	GRUESO 0.15mm	SHIM 0.15mm	SPESSORE 0.15mm	CALE 0.15mm
4	PAF8-04010000	3B2-64010-0	PIÑON ADELANTE	GEARM FORWARD	PIGNONE AVANTI	PIGNON DE MARCHE AVANT
5	PAF8-04000305	369-64223-0	PIN	PIN CLUTCH	SPINOTTO	PIN
6	PAF8-04000303	3B2-64215-0	SELECTOR	CLUTCH, DOG	SELETTORE	CRABOT
7	PAF8-04000302	3V1-64221-0	MUELLE	SPRING, CLUTCH	MOLLA	RESSORT
8	PAF8-04000301	3V1-64211-0	EJE HÉLICE	SHAFT, PROPELLER	ASSE ELICHE	ARBRE D'HELICE
9	PAF8-04000012	369-64032-0	ARANDELA	WASHER	RONDELLA	RONDELLE
10	PAF8-04000014	3B2-64030-0	PIÑÓN ATRÁS	GEAR REVERSE	PIGNONE MARCIA INDIETRO	PIGNON DE MARCHE ARRIÈRE
11	PAF8-04040002	345-65015-0	TÓRICA	O-RING	ANELLO	JOINT TORIQUE
12	PAF8-04040000	3B2S60100-0	DIÁBOLO	COVER ASSY	DIAVOLO	DIABOLO COMPLET
13	PAF8-04040001	3B2S60101-0	DIÁBOLO	COVER, LOWE CASING	DIAVOLO	DIABOLO
14	PAF8-04040004	369-60111-0	RETÉN	OIL SEAL	PARAOLIO	JOINT SPI
15	PAF8-04000019	3B2-64230-1	GRUESO	CUSHION, PROPELLER	SPESSORE	CALE
16	PAF8-04050000	3B2W64517-0	HÉLICE	PROPELLER ASSY	ELICHE	HELICE
17	PAF15-06000016	369-64121-0	TUERCA	NUT, HEXAGON	DADO	ÉCROU
18	PAF8-04000015	3V1-60042-0	GUÍA SELLO DE GOMA	GUIDE RUBBER SEAL	GUIDA PARAOLIO	GUIDE EN CAOUTCHOUC
19	PAF8-04000016	3V1-60041-0	SELLO DE GOMA	WATER ENVELOP	PARAOLIO	SUPPORT EN CAOUTCHOUC
20	PANSKFJ-1516	3V1-60211-0	RODAMIENTO	BEARING	CUSCINETTO	ROULEMENT
21	PAF8-04000003	3B2-64020-0	PIÑÓN DE ATAQUE	INITIATIVE GEAR	PIGNONE ATTACCO	PIGNON D'ATTAQUE
22	PAF8-04020001L	3V1-64307-1	EJE VERTICAL **L**	DRIVE SHAFT **L**	ASSE VERTICALE **L**	ARBRE DE COMMANDE **L**
	PAF8-04020001S	3V1-64306-1	EJE VERTICAL **S**	DRIVE SHAFT **S**	ASSE VERTICALE **S**	ARBRE DE COMMANDE **S**
23	PAF8-04000021	3B2-65022-0	PIN	PIN, DOWER	SPINOTTO	PIN
24	PAF8-04000005	3B2-65020-0	JUNTA	GASKET, WATER PUMP SEAT	GUARNIZIONE	JOINT
25	PAF8-04000004-1	3B2-64023-0	GRUESO 0.10 mm	SHIM 0.10mm	SPESSORE 0.10 mm	CALE 0.10 mm
26	PAF8-04000101	309-60111-0	RETÉN	OIL SEAL	PARAOLIO	JOINT SPI
27	PAF8-04000006	3B2-65029-0	JUNTA	GASKET, OUTER PLATE	GUARNIZIONE	JOINT
28	PAF8-04000007	3B2-65025-0	PLACA	OUTER PLATE	PIASTRA	PLAQUE
29	PAF8-04000008	3B2-65018-0	JUNTA	GASKET, OUTER PLATE	GUARNIZIONE	JOINT
30	PAF8-04000200	3B2-65021-1	IMPULSOR	IMPELLER	GIRANTE	TURBINE
31	PAF8-04000010	3B2-65011-0	CASQUILLO	INNER SHELL, WATER PUMP	BOCCOLA	COUVERCLE, POMPA À EAU
32	PAF8-04000009	3B2-65016-0	BOMBA DE AGUA	WATER PUMP	POMPA D'ACQUA	POMPA À EAU
33	PAF8-04000013	3B2-65016-0	RETÉN	SEAL	TENUTA	JOINT DE TUBE D'EAU
34	PAF8-03000011	3V1-66302-0	SEGURO	LOCK BLOCK	BLOCCAGGIO	SUPPORT TIGE DE CHANGEMENT DE VITESSE
35	PAF8-03000010	3V1-66211-0	EJE DEL CAMBIO	SHIFT ROD	ASSE CAMBIO	TIGE CHANGEMENT DE VITESSE
36	PAF8-03010003	3V1-66225-0	SEGURO DEL EJE	BLOCK SHIFT ROD	BLOCCAGGIO ASSE	TIGE DE BLOCAGE
37	PAF8-03010001	3V1-66187-0	ARANDELA	WASHER, HANDLE	RONDELLA	RONDELLE
38	PAF8-03010005	3B2-66113-0	TOPE	STOPPER, SHIFT LEVER	TAPPO	LEVIER
39	PAF8-03010006	3C8-66116-0	PLACA	PLATE, SHIFTLEVER STOPPER	PIASTRA	CONTRE PLAQUE LEVIER CAHNGEMENT VITESSE
40	PAF8-03010007	3B1-66145-0	PLACA	PLATE	PIASTRA	PLAQUE
41	PAF8-05000020	3V1-63508-0	PLACA	PALTE	PIASTRA	PLAQUE
42	PAF8-05000018	346-67114-0	CASQUILLO	PLATE ACCELEROGRAPH ENFOPCE	BOCCOLA	PLAQUE SUPPORT LEVIER PRINCIPAL
43	PAF8-05000019	3V1-63622-0	POLEA	MAIN PULLEY	PULEGGIA	POULIE

4T STROKES MFS8 • MFS9.8

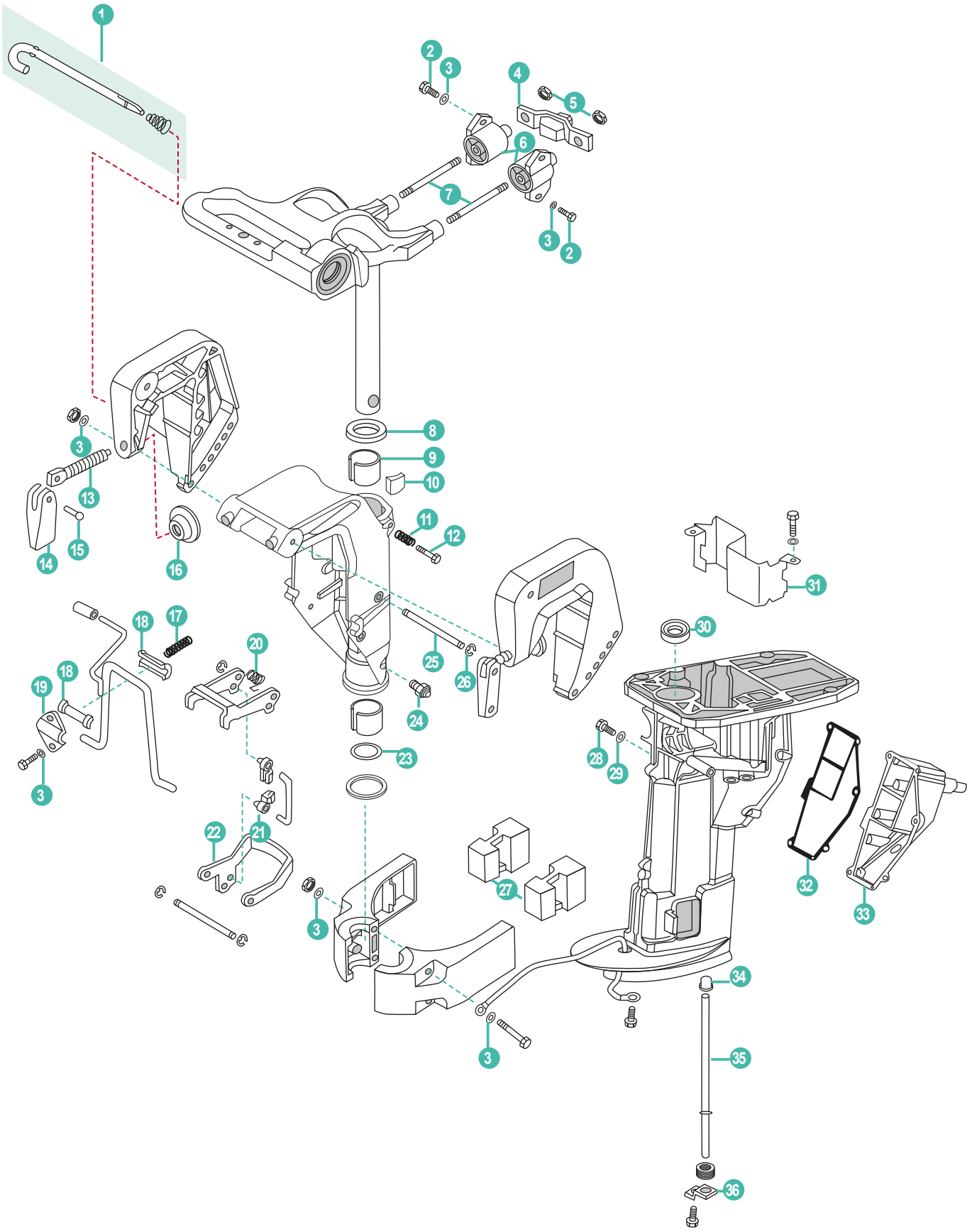

	REF	OEM				
1	PAF8-01010200	350-62121-1 369-62122-2	GANCHO DE CIERRE	THRUST ROD ASSY	ASSE DI CHIUSSURA	CROCHET DE FERMETURE
2	PAGB/T5783-M6X20	910184-5620	TORNILLO	BOLT M6x20	VITE	VIS
3	PAGB/T97.1-6	910184-5620	ARANDELA	WASHER	RONDELLA	RANDELLE
4	PAF8-00000100	3V1-61333-1	SILENBLOCK	ABSORBER (FRONT)	SILENBLOCK	SILENBLOCK
5	PAGB/T889.1-M8	3V1-61324-0	TUERCA M8	NUT M8	DADO M8	ÉCROU M8
6	PAF8-02000100	3V1-61301-1 940113-0800	SILENBLOCK	ABSORBER ASSY	SILENBLOCK	SILENBLOCK
7	PAF8-01000003	3V1-61313-0	TORNILLO M8x65	DICEPHALOUS BOLT M8x65	VITE M8x65	VIS M8x65
8	PAF8-01000001	350-62423-0	ARANDELA	WASHER, ROTARY BRACKET	RONDELLA	RONDELLE
9	PAF8-01000002	350-62417-0	CASQUILLO	BUSHING	BOCCOLA	ENTRETOISE
10	PAF8-01000100	345-62441-0	SEGURO DE CIERRE	LOCKING BLOCK ASSY	CHIUSURA SICUREZA	BLOC DE VERROUILLAGE
11	PAF8-01010102	346-62421-1	MUELLE	SPRING, LOCKING	MOLLA	RESSORT
12	PAGB/T5783-M8X30	910113-0830	TORNILLO M8X30	BOLT M8x30	VITE M8X30	VIS M8X30
13	PAF4-01010002	398-62103-0	TORNILLO	CLAMP SCREW	VITE	VIS
14	REC6L8-G3118-01	332S62102-1	MANETA	CLAMP HANDLE, STERN	MANIGLIA	POIGNEE DE BLOCAGE
15	PAF4-01010005	3C8-62104-1	RIBETE	RIVET, CLAMP HANDLE	RIVETTO	RIVET
16	PAF4-01010003	332-62101-0	ARANDELA	CLAMP PAD	RONDELLA	RONDELLE
17	PAF8-01010104	369-66112-1	MUELLE	SPRING, SUPPORT	MOLLA	RESSORT
18	PAF8-01010103	393-62437-0	PASADOR	PIN	PIN	PIN
19	PAF8-01010105	369-62439-1	PLACA	PRESS PLATE	PIASTRA	PLAQUE
20	PAF8-01010109	3B2-66315-0	MUELLE	SPRING, WREST	MOLLA	RESSORT
21	PAF8-01010112	3K9-05223-0	ADAPTADOR	TIE-IN, CONNECTING ROD	ADATTATORE	EMBOUT DE CABLE
22	PAF8-01010106	3V1-66313-0	UÑA	OUTER FRAME, ROTARY BRACKET	CORNICE ESTERNA	CADRE EXTERIEUR POUR SUPPORT ROTATIF
23	PAJASOF40435-022	350-62415-0	RETÉN	O-RING Ø22.4xø3.5	TENUTA ANELLO	JOINT
24	PAGB/T7940.1-M6	344-67177-0	ENGRASADOR M6	OILER M6	INGRASSATORE M6	GRAISSEUR M6
25	PAF8-01010108	3B2-66321-1	EJE	SHAFT, ROTARY BRACKET	ASSE	AXE
26	PAGB/T896-5	945303-0500	CLIP	CIRCLIP	CLIP	CLIP
27	PAF8-00000002	3V1-61302-0	AMORTIGUADOR	ABSORBER	AMMORTIZZATORE	SILENT BLOC
28	PAF15-04000002	3R3-07405-1	TAPÓN	BOLT, OIL DRAIN	TAPPO	BOUCHON
29	PAF15-04000003	3R3-07406-0	JUNTA	GASKET	GUARNIZIONE	JOINT
30	PAF8-02000002	3B2-01215-0	RETÉN	OIL SEAL	PARAOLIO	JOINT SPI
31	PAF8-02000003	3V1-07440-0	SEPARADOR CARTER	CLAPBOARD, OIL SUMP	ASSICELLA, COPPA OLIO	PLAQUE GUIDE
32	PAF8-02000004	3V1-61220-0	JUNTA TAPA DE ESCAPE	GASKET, EXHAUST OUTER COVER	GUARNIZIONE COPERCHIO SCARICO	JOINT DE COUVERCLE EXT ECHAPPEMENT
33	PAF8-02000005	3V1-61208-0	TAPA ESCAPE	EXHAUST OUTER COVER	COPERCHIO SCARICO	COUVERCLE EXT ECHAPPEMENT
34	PAF8-02000007	3V1-65206-0	RETÉN TUBO DE AGUA	UPPER SEAL, WATER PIPE	TENUTA, TUBO ACQUA	JOINT SUPERIEUR TUBE D'EAU
35	PAF8-02000006(L)	3V1-65110-0	TUBO **L**	WATER PIPE **L**	TUBO **L**	TUYAU D'EAU **L**
	PAF8-02000006(S)	3V1-65100-0	TUBO **S**	WATER PIPE **S**	TUBO **S**	TUYAU D'EAU **S**
36	PAF8-02000009	3V1-65203-0	PLACA TUBO DE AGUA	PLATE, WATER PIPE	PIASTRA, TUBO ACQUA	PLAQUE PIPE D'EAU

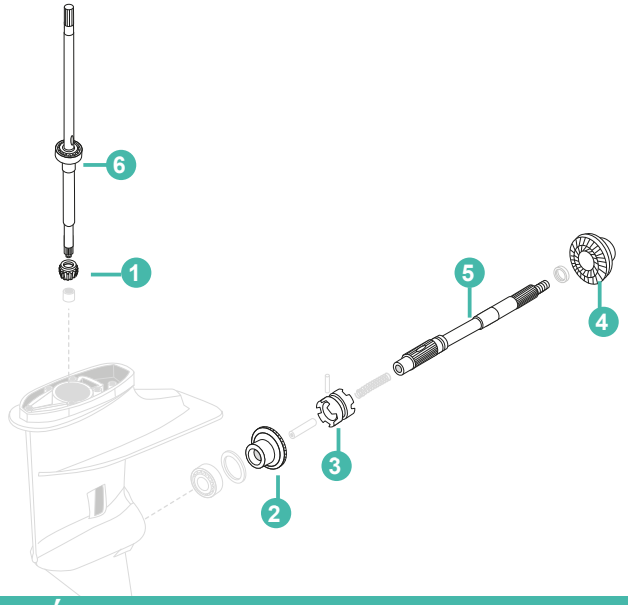

GUÍA PIEZAS COLA STERN DRIVE COMPONENTS GUIDE GUIDA RICAMBI PIEDI GUIDE PIECES D'EMBASE

	1	2	3	4	5	6 S	6 L
M2.5A, B, A2	REC43-16138	REC43-812944					
M3.5A, B, A2, B2	REC43-16138	REC43-812944					
M4C M5B, BS	REC43-16138	REC43-812944		REC43-8129451	REC44-195133	REC45-161351	REC8M0076368
MFS4, 5, 6A2, B, C	REC43-16138	REC43-812944		REC43-8129451	REC44-195133	REC45-161351	REC8M0076368
MFS8, 9.8B	PAF8-04000003	PAF8-04010000		PAF8-04000014	PAF8-04000301		
MFS8A2-3 MFS9.8A2-3	PAF8-04000003	PAF8-04010000	PAF8-04000303	PAF8-04000014	PAF8-04000301	PAF8-04020001S	PAF8-04020001L
M9.9 M15D2 M18E2	REC43-803740	REC43-803739		REC43-803741	REC879147T96	REC45-803738	REC45-8037381
MFS9.9B2 MFS15B2 MFS18B2	REC43-803740T02	REC43-803739T03		REC43-803741T03	REC879147T96		

SISTEMA DE PROPULSIÓN
PROPULSION SYSTEM
SISTEMA DI PROPULSIONE
SYSTEME DE PROPULSION

HÉLICES ALUMINIO E INOXIDABLE DE 3 Y 4 PALAS
3 & 4 BLADE ALUMINIUM & SS PROPELLERS
ELICHE ALLUMINIO E INOX DA 3 E 4 PALE
HELICE ALUMINIUM ET INOX 3 ET 4 PALES

CÓDIGO DE REFERENCIAS
PART NO. CODING SYSTEM
SISTEMA DI CODICE
CODAGE DES REFERENCES

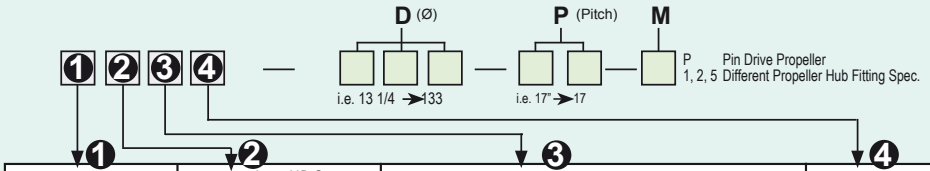

1	2	3	4
1. Mercury, Mariner **2.** Johnson, Evinrude **3.** Yamaha **4.** Suzuki **5.** Tohatsu **6.** **7.** **8.** Volvo Penta **9.** Rubex System	0.5,6,8 and 9.8 HP Group **1.** A Group **2.** B Group **3.** C Group **4.** D Group **5.** E Group **6.** F Group **7.** VP (Std. Hub) **8.** VP (Long Hub)	**1.** AL **2. Saturn** (INOX | Stainless Steel) **3. New Saturn** (INOX | Stainless Steel) **4. Titan** (INOX | Stainless Steel) **5. HR Titan** (INOX | Stainless Steel) **6. Scorpion** (INOX | Stainless Steel) **7. Lexor** (INOX | Stainless Steel)	**1.** 3R Rubber Hub **2.** 3L Rubber Hub **3.** 4R Rubber Hub **4.** 4L Rubber Hub

SOLAS

AMITA 3

SOLAS

Hélice de aluminio con núcleo de goma de gran resistencia.

Aluminum propeller with heavy duty rubber hub.

Eliche di alluminio con mozzi in gomma ad alta resistenza.

Hélice en aluminium avec moyeu en caoutchouc



AMITA 4

SOLAS

Hélices de aluminio con núcleo de goma de gran resistencia. Van muy suaves a poca velocidad y hace el barco muy manejable con la mar picada.

Aluminum propeller with heavy duty rubber hub. Smoother low speed makes the offshore boating activity much easier.

Eliche di alluminio con mozzo in gomma ad alta resistenza. Molto morbido a bassa velocità e rende la barca molto maneggevole con mare cattivo.

Hélice en aluminium avec moyeu en caoutchouc. Permet d'aller doucement à basse vitesse et rende le bateau très maniable lorsque la mer est agitée



NEW SATURN

SOLAS

Hélices de acero inoxidable. Ofrece buena aceleración y rendimiento. Tamaño más pequeño que ofrece un diámetro extragrande.

Stainless steel propeller. Offers good acceleration & all-round performance. Smaller pitch sizes offered in extra large diameter with increased blade area.

Eliche di acciaio inox. Buona accelerazione. Piccole dimensione che offre un più grande diametro.

Hélice inox, offrant de bonnes accélérations et performances. Taille de pas reduite pour les modèles de grands diamètres avec une surface de pale plus importante.



GUÍA DE HÉLICES CON NÚCLEO INTEGRADO — PROPELLERS APPLICATION WITH RUBBER HUB — GUIDA ELICHE CON MOZZO — GUIDE DES HELICES ET MOYEUX

	2T STROKES	4T STROKES	R.O. OEM	A	B	D	P	R	AL AMITA 3	AL AMITA 4	INOX STAINLESS STEEL NEW SATURN
5	✓				3	7,8	7	R	SOL5011-078-07		
4, 5, 6		✓					8		SOL5011-078-08		
			3B2-64513-0				6,5		SOL5011-085-07		
8, 9'8	✓	✓	3B2-64515-0	12	3	8,5	7,5	R	SOL5011-085-08		
			3B2-64517-0				8,5		SOL5011-085-09		
			362-64105-0				6,9		SOL5111-093-07		
9'9, 12, 15, 18	✓		362-64103-0				7,8		SOL5111-093-08		
			362-64101-0				8,8		SOL5111-093-09		
				14	3	9,2	9,1	R	SOL5111-093-09		
9'9, 15, 18, 20		✓	362-64108-0				9,8		SOL5111-093-10		
							11		SOL5111-093-11		
			346-64101-5			9,8	9,3		SOL5211-099-09		
			346-64102-5			9,8	10,2		SOL5211-099-10		
25, 30	✓	✓	346-64103-5			9,8	11,3	R	SOL5211-099-11		
						9,9	12		SOL5211-099-12		
			346-64104-5			9,8	13,1		SOL5211-099-13		
						12,2	7		SOL5311-122-07		
			361-64113-0			12,2	8		SOL5311-122-08		
			361-64114-0			12,1	9		SOL5311-121-09	SOL5313-118-09	
			348-64102-0			11,6	11		SOL5311-116-11	SOL5313-111-11	
			348-64103-0			11,4	12		SOL5311-114-12	SOL5313-108-12	
35, 40, 50, 55	✓		3E3-64528-0	13	3	11,1	13	R	SOL5311-111-13	SOL5313-105-13	
			3E3-64536-0			11,1	14		SOL5311-111-14	SOL5313-105-14	
						11	15		SOL5311-110-15		
						11	16		SOL5311-110-16		
						11	17		SOL5311-110-17		
			3B7-64523-1			14	11		SOL3411-140-11		
			3B7-64527-1			13,75	13		SOL3411-138-13	SOL3413-133-13	
60, 70, 90, 115, 120, 140	✓		3C7-64536-0			13,5	15		SOL3411-135-15	SOL3413-130-15	SOL3431-135-15
			3C7-64541-0	15	3	13,25	17	R	SOL3411-133-17	SOL3413-128-17	SOL3431-133-17
			3C7-64554-0			13	19		SOL3411-130-19	SOL3413-125-19	SOL3431-130-19
						13	21		SOL3411-130-21	SOL3413-125-21	SOL3431-130-21

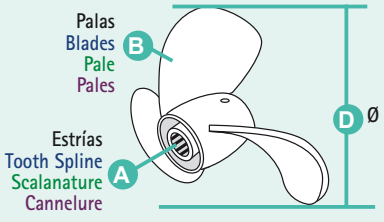

P Paso
Pitch
Passo
Pas

R Rotación L (izquierda) R (derecha)
Rotation L (left) R (Right)
Rotazione L (SX) R (DX)
Rotation L (gauche) R (droit)

NÚCLEO INTERCAMBIABLE | INTERCHANGEABLE HUB | MOZZO INTERCAMBIABILE | MOYEU INTERCHANGEABLE

	A	REF	
35HP (35B only) (1984+) 40HP (1984+), 50HP (All except 50C) (1992+)	13	SOLRBX-116	C
50HP (50C only) (1987-91) 55HP (1981-88) 60A (1986+) 70A/70B (1981+	13	SOLRBX-112	C
90-140HP, (1987+	13	SOLRBX-109	D



HÉLICES PARA NÚCLEO INTERCAMBIABLE | PROPELLERS FOR INTERCHANGEABLE HUB | ELICHE PER MOZZO INTERCAMBIABILE | HELICES AVEC MOYEU INTERCHANGEABLE

	B	D	P	R	AL
C 30-75 HP	3	11.4	12	R	SOL9311-114-12
		11.1	13	R	SOL9311-111-13
D 40-140 HP	3	14	9	R	SOL9411-140-09
		14	11	R	SOL9411-140-11
		13.75	13	R	SOL9411-138-13
		13.50	15	R	SOL9411-135-15
		13.25	17	R	SOL9411-133-17
		13.2	19	R	SOL9411-132-19
		13.2	21	R	SOL9411-132-21
E 135-350 HP	3	15.5	11	R	SOL9511-155-11
		15.3	13	R	SOL9511-153-13
		16	13	R	SOL9511-160-13
		15	15	R	SOL9511-150-15
		15	15	L	SOL9512-150-15
		14.8	17	R	SOL9511-148-17
		14.8	17	L	SOL9512-148-17
		14.5	19	R	SOL9511-145-19
		14.5	19	L	SOL9512-145-19
		14.3	21	R	SOL9511-143-21
		14.3	21	L	SOL9512-143-21

	B	D	P	R	INOX STAINLESS STEEL
D 40-140 HP	3	$13^{3/4}$	13	R	SOL9431-138-13
		$13^{3/4}$	13	L	SOL9432-138-13
		$13^{1/2}$	15	R	SOL9431-135-15
		$13^{1/2}$	15	L	SOL9432-135-15
		$13^{1/4}$	17	R	SOL9431-133-17
		$13^{1/4}$	17	L	SOL9432-133-17
		13	19	R	SOL9431-130-19
		13	19	L	SOL9432-130-19
		13	21	R	SOL9431-130-21
E 90-140 HP	3	$14^{1/2}$	15	R	SOL9531-145-15
		$14^{1/2}$	15	L	SOL9532-145-15
		$14^{1/4}$	17	R	SOL9531-143-17
		$14^{1/4}$	17	L	SOL9532-143-17
		14	19	R	SOL9531-140-19
		14	19	L	SOL9532-140-19
		14	21	R	SOL9531-140-21
		14	21	L	SOL9532-140-21
		14	23	R	SOL9531-140-23
		14	23	L	SOL9532-140-23
E 135-350 HP	3	$15^{3/4}$	15	R	SOL9571-158-15
		$15^{3/4}$	15	L	SOL9572-158-15
		$15^{1/2}$	17	R	SOL9571-155-17
		$15^{1/2}$	17	L	SOL9572-155-17
		$15^{1/4}$	19	R	SOL9571-153-19
		$15^{1/4}$	19	L	SOL9572-153-19
		15	21	R	SOL9571-150-21
		15	21	L	SOL9572-150-21
		$14^{3/4}$	23	R	SOL9571-148-23
		$14^{3/4}$	23	L	SOL9572-148-23





Núcleo intercambiable (no incluido).
Interchangeable hub (not included).
Mozzo intercambiabile (non incluso).
Moyeu interchangeable (non inclus)

REF --> RO / OEM

REF	R.O. / OEM	
C		
CEF500337	HZW1-19210-B04	604
CEF500338	HZV5-19210-003	604
CEF500344	3B2-65021-1	589-604
CEF500377	369-65021-1	589-604
CEF500379	345-65021-1	604
CEF500382	345-65021-0	589-604
CEF500383	334-65021-0	589-604
CEF500388	3B7-65021-2	604
CEF500388	3C7-65021-1	604
CEF500391	HZY3-19210-003	604
CEF500396	309-65021-1	604
CM33860-2181	338-60218-2	606
CM348-60217-0M	348-60217-0	606
CM3B7-602170	3B7-60217-0	606
CM3B7-60218-0	3B7-60218-1	606
CM3C760-2181	3C7760-2181	606
CM3C760-2181A	3C7760-2181	606
CM3C8-60217-0	3C8-60217-1	606
CM3H6-60218-000	3H6-60218-0	606
CM3H6-60218-000A	3H6-60218-0	606
CM3M2-60218-1	3M2-60218-0	606
CM3V1-60217-0	3V1602170	606
CM3V1-60217-0A	3V1602170	606
CM5338602182A0	5338602182A0	606
CM5338602182A0A	5338602182A0	606
CHAL78C		600
CHAL82C		600
CHAL82YC		600
CHAL86C		600
CHAL87YCC		600
CHARA8HC		600
G		
GS30435		595
GS31001		594
GS31002		594
GS31015	394-702500M	592
GS31016	3B2-702801M	592
GS31017		592
GS31018	3B2-702601M	592
GS31019	99998-0MA2	591
GS31020		591
GS31064		592
GS31065		594
GS31066		594
GS31067		594
GS31068		591
GS31069		591
GS31073		591
GS31088		591
GS31090		590
GS31090		590
GS31095		590
GS31096		590
GS31097		590
GS31099		590
GS31155		594
GS31156		594
GS31157		594
GS31166		594
GS31183		590
GS31187	65770-95541	590
GS31189		590
GS35031		590
GS35032		590
GS31183		442
GS31187		442
GS31189		442
GS35031		442
GS35032		442
L		
LENS3213		593
LENS3227	99105-20005	593
N		
NGKB7HS-10	9701-1-1005	600
NGKB8HS-10	9701-1-1006	600
NGKBP7HS-10	9701-1-1010	600
NGKBPR6HS-10	9701-1-1013	600
NGKBPR7HS-10	9701-1-1014	600
NGKBR7HS-10	9701-1-1015	600
NGKBR8HS-10	9701-1-1110	600
NGKDCPR6E	9701-1-1103	589-600
NGKIKR6G8	9701-1-1121	600
NGKIZFR5J	9791-1-1109	600
NGKIZFR6	9701-1-1111	600
NGKLMAR6C-9	HZZ3-31909-003	600

REF	R.O. / OEM	
P		
PAF15-04000002	3R3-07405-1	625
PAF15-04000003	3R3-07406-0	625
PAF15-06000016	369-64121-0	623
PAF15-07000017	3V1-02011-0	615
PAF15-07000018	3V1-03952-0	615
PAF15-07000031	HZW9-19300-003	603
PAF15-07010100	3H6-07611-0	598-613
PAF15-07010101	3H6-07612-0	613
PAF15-07020005	350-00024-1	615-620
PAF15-07040303	3R0-07238-0	615
PAF15-07040304	3H8-07237-0	615
PAF15-07080000	3AC-02230-0	594
PAF15-07080000	3AD-02230-0	594
PAF15-07080000	3B7-02230-0	594
PAF4-01010002	398-62103-0	625
PAF4-01010003	332-62101-0	625
PAF4-01010005	3C8-62104-1	625
PAF4-04000019	3T5-10131-0	615
PAF4-04000030		591
PAF4-04130101	3AA-05019-0	616
PAF4-04130102	3R1-05131-0	616
PAF4-05000010		591
PAF4-05000300	369-02230-0	595
PAF4-05000300	396-02230-0	595
PAF4-05000300		589
PAF40-0701000EI		594
PAF8-00000002	3V1-61302-0	625
PAF8-00000003	3R3-61017-0	615
PAF8-00000004	3V1-01303-0	615
PAF8-00000100	3V1-61333-1	625
PAF8-00000200	3V1-07421-0	615
PAF8-005030010	3H8-07226-0	615
PAF8-01000001	350-62423-0	625
PAF8-01000002	350-62417-0	625
PAF8-01000003	3V1-61313-0	625
PAF8-01000100	345-62441-0	625
PAF8-01010102	346-62421-1	625
PAF8-01010103	393-62437-0	625
PAF8-01010104	369-66112-1	625
PAF8-01010105	369-62439-1	625
PAF8-01010106	3V1-66313-0	625
PAF8-01010108	3B2-66321-1	625
PAF8-01010109	3B2-66315-0	625
PAF8-01010112	3K9-05223-0	625
PAF8-01010200	350-62121-1	625
PAF8-01010200	369-62122-2	625
PAF8-02000002	3B2-01215-0	625
PAF8-02000003	3V1-07440-0	625
PAF8-02000004	3V1-61220-0	625
PAF8-02000005	3V1-61208-0	625
PAF8-02000006(L)	3V1-65110-0	625
PAF8-02000006(S)	3V1-65100-0	625
PAF8-02000007	3V1-65206-0	625
PAF8-02000009	3V1-65203-0	625
PAF8-02000100	3V1-61301-1	625
PAF8-02000100	940113-0800	625
PAF8-03000010	3V1-66211-0	623
PAF8-03000011	3V1-66302-0	623
PAF8-03010001	3V1-66187-0	623
PAF8-03010003	3V1-66225-0	623
PAF8-03010005	3B2-66113-0	623
PAF8-03010006	3C8-66116-0	623
PAF8-03010007	3B1-66145-0	623
PAF8-04000003	3B2-64020-0	623-626
PAF8-04000004-1	3B2-64023-0	623
PAF8-04000005	3B2-65020-0	623
PAF8-04000006	3B2-65029-0	623
PAF8-04000007	3B2-65025-0	605-623
PAF8-04000008	3B2-65018-0	623
PAF8-04000009	3B2-65016-0	623
PAF8-04000010	3B2-65011-0	605-623
PAF8-04000012	369-64032-0	623
PAF8-04000012-1	369-64014-0	623
PAF8-04000012-2	369-64015-0	623
PAF8-04000013	3B2-65016-0	623
PAF8-04000014	3B2-64030-0	623-626
PAF8-04000015	3V1-60042-0	623
PAF8-04000016	3V1-60041-0	623
PAF8-04000019	3B2-64230-1	623
PAF8-04000021	3B2-65022-0	623
PAF8-04000101	309-60111-0	623
PAF8-04000200	3B2-65021-1	623
PAF8-04000301	3V1-64211-0	623-626
PAF8-04000302	3V1-64221-0	623
PAF8-04000303	3B2-64215-0	623-626
PAF8-04000305	369-64223-0	623
PAF8-04010000	3B2-64010-0	623-626
PAF8-04020001L	3V1-64307-1	623-626
PAF8-04020001S	3V1-64306-1	623-626
PAF8-04040000	3B2S60100-0	623
PAF8-04040001	3B2S60101-0	623

REF	R.O. / OEM	
PAF8-04040002	345-65015-0	623
PAF8-04040004	369-60111-0	623
PAF8-04050000	3B2W64517-0	623
PAF8-05000002	3V1-01024-0	615
PAF8-05000003	172-36008-0	616
PAF8-05000004	3V1-10045-0	589-615
PAF8-05000006	3A0-76079-0	613
PAF8-05000007	3B7-06305-0	613
PAF8-05000008	3V1-02010-1	615
PAF8-05000009	3V1-02104-0	615
PAF8-05000011	3T5-06920-0	613
PAF8-05000012	3V1-06308-0	616
PAF8-05000013	3V1-06302-0	616
PAF8-05000017	98AH10-0120	615
PAF8-05000018	346-67114-0	623
PAF8-05000019	3V1-63622-0	623
PAF8-05000020	3V1-63508-0	623
PAF8-05000021	3R0-66308-0	613
PAF8-05000024	369-00132-0	613
PAF8-05000024	98AB-5-0330	615
PAF8-05000025	369-84398-0	615
PAF8-05000100	3V1-02305-0	615
PAF8-05000200	3V1-06071-0	599-613
PAF8-05000300	3AA-06021-0	598-613
PAF8-05000400	3AA-06060-0	613
PAF8-05000400	3AA-06060-00	601
PAF8-05000400	3AA060600M	60
PAF8-05000500	3V1-06040-0	599-613
PAF8-05000500	3V1060400	599
PAF8-05000500	3V1060400M	599
PAF8-05000600	3AA-06091-0	613
PAF8-05000800	3V1-07410-0	615
PAF8-05010000	3V1B01100-0	615
PAF8-05010002	3H8-02093-0	615
PAF8-05010004	3V1-02305-0	615
PAF8-05010005	346-01032-0	615
PAF8-05010009	3V1-07407-0	615
PAF8-05010012	3V1-00121-0	615
PAF8-05010014	3V1-10060-0	615
PAF8-05010015	3V1-10063-0	615
PAF8-05010016	3V1-10068-0	615
PAF8-05020001	3V1-00030-1	615
PAF8-05020101	3V1-00001-0	615-620
PAF8-05020105	332-00021-0	615
PAF8-05020105	332-00024-0	620
PAF8-05020200	3V1-00040-0	615-620
PAF8-05030001	3V1-07201-0	615
PAF8-05030002	3V1-07202-0	615
PAF8-05030004	3V1-07205-0	615
PAF8-05030005	3AA-07203-0	615
PAF8-05030006	3V1-07221-0	615
PAF8-05030007	3H6-07223-0	615
PAF8-05030008	3V1-07010-0	615
PAF8-05030009	3AA-07225-0	615
PAF8-05030011	3H8-07025-0	615
PAF8-05030012	3V1-07653-0	615
PAF8-05030015	3R3-07227-0	615
PAF8-05030100	3V1B01001-0	615
PAF8-05030200	3V1-07235-0	615
PAF8-05030300	3V1-07600-0	615
PAF8-05030400	3H8-10062-2	615
PAF8-05040000	3V2-03100-2	596
PAF8-05050002	3V1-05259-0	616
PAF8-05050003	3R1-05125-0	616
PAF8-05050004	3AA-05004-0	616
PAF8-05050005	3V1-05104-1	616
PAF8-05050006	3R1-05003-1	616
PAF8-05050007	3R1-05012-0	616
PAF8-05050009	3R1-05007-0	616
PAF8-05050018	3AA-05013-0	616
PAF8-05090000W	3V1-06023-0	599
PAGB/T5783-M6X20	910184-5620	625
PAGB/T5783-M8X30	910113-0830	625
PAGB/T7940.1-M6	344-67177-0	625
PAGB/T889.1-M8	3V1-61324-0	625
PAGB/T896-5	945303-0500	625
PAGB/T97.1-6	910184-5620	625
PAJASOF40435-022	350-62415-0	625
PANSKFJ-1516	3V1-60211-0	623
PAT15-04000011	940121-1200	613
PAT3.6-04000006	309-00131-0	615
PH130-0006	3C8-76010-1	600
PH130-0006	3C8760101	600
PH130-0006	3C8760101M	600
PH130-0048	353-76010-4	600
PH130-0061	350-76010-0	600
PH130-0061	3AA760100	600
PH130-0070	HZY3-31200-003	601
PH130-0080	346-76010-0M	600
PH200-T024		602
PH200-WH01		602

REF	R.O. / OEM	
R		
RAC23289-10		593
RAC23299-10		593
RAC320R-RAC-01		593
RAC320R-RAC-03		593
RAC490R-RAC-01	99105-20005-ASY	593
RACPFF5510		592
RACRK22628		594
RACS3213		593
RACS3227	99105-20005	593
REC06192-ZY3-000	HZY3-06192-000	605
REC06192-ZY6-000	HZY6-06192-000	605
REC09401-11425		591
REC09401-11425BULK		591
REC10W30U3		595
REC10W30U6		595
REC10W40U3	990C0-10W40-GLN	595
REC10W40U6	990C0-10W40-GLN	595
REC15400-PLM-A01PE	HPLM-15400-PE	596
REC16157	369-65011-0	605
REC16159	369-65025-0	605
REC16253	369-03231-0	597
REC162532	3C8-03125-0	597
REC16275	369-03303-0	596
REC16325	369-03306-0	596
REC16911-ZY3-010	HZY3-16911-010	595
REC16911-ZZ5-003	HZZ5-16911-003	595
REC17109-ZY6-000	HZY6-17109-000	621
REC18-6865		602
REC19210-ZV5-003	HZV5-19210-003	604
REC19210-ZW1-B02	HZW1-19210-B04	604
REC19210-ZY3-003	HZY3-19210-003	604
REC19300-ZV5-043	HZV5-19300-043	603
REC22-8M0001721		591
REC24942		592
REC24950		593
REC24952		593
REC25000		592
REC25010		592
REC25020		592
REC25030		592
REC25W40U3		595
REC26-16051	369-00122-0	608
REC26-161301	346-60111-0	618
REC26-16162	369-60223-0	618
REC26-161622	346-65013-0	618
REC26-16703	369-01215-0	618
REC26-803514	101-00121-0	609
REC26-803667	350-00121-0	618
REC26-85370711	3B2-00051-0	609
REC26-8537072	346-01215-0	618
REC27-16274	369-03302-0	596
REC27-16326	369-03307-0	596
REC27-8555691	3C8-04028-0	596
REC2TU3		595
REC2TU6		595
REC30-16049	9603-3-6204	608-609
REC30-160494	96603-3-6305	610
REC30-16049T01	345-00113-0	611
REC30-898101936	9643-3-6004	619
REC30580-ZV4-013	HZV4-30580-013	599
REC309-01005-2	309-01005-2	617
REC31-16052	350-00042-0	608-610-619
REC31-8036752	338-00042-0	609-619
REC31-813048	369-00043-0	608
REC31-8130482	356-00043-0	611
REC31-855553	3C8-00113-0	612
REC31200-ZY6-003	HZY6-31200-003	601
REC345-00042-0	345-00042-0	611-612-620
REC345-65021-0	345-65021-0	604
REC346-01005-0	346-01005-0	617
REC346-01303-0	350-01303-0	618
REC35-802893Q		592
REC35-802893Q01	3Y7-02234-0	592
REC35-80365M	646-24251-02	595
REC350-01005-0	350-01005-0	617
REC350-01303-0	350-01303-0	618
REC350-61012-1	350-61012-1	618
REC351-01005-0	351-01005-0	617
REC353-06260-0	353-06260-0	601
REC353-06260-0	353-06260-2	601
REC35668-ZY6-003	HZY6-35668-003	598
REC369-06021-0	369-06021-0	598
REC37510-PNB-003	HPNB-37510-003	598
REC39-16054A5	346-00011-0	611-620
REC39-803678A1	350-00011-0	610
REC39-803678A3	3B2-00011-0	609-619
REC39-8M0055809	3V1-00011-0	615
REC3A0-06040-1	3A0-06040-1	599
REC3A106-2602M	3A106-2402M	601
REC3A106-2602M	3A106-2601M	601
REC3A106-2602M	3A106-2602M	601
REC3B2-01005-0	3B2-01005-0	617
REC3B2-01303-0	3B2-01303-0	618
REC3B2-65021-1	3B2-65021-1	604
REC3B7-65021-2	3B7-65021-2	604
REC3B7-87121-1	3B7-87121-7	617
REC3C8-01005-4	3C8-01005-4	617
REC3C8-01024-0	3C8-01024-0	617
REC3C8-01303-4	3C8-01303-4	618
REC3C8-02104-0	3C8-02104-0	621
REC3C8-02305-0	3C8-02305-0	621
REC3F0-06060-0	3F0-06060-0	601
REC3F0-65029-0	3F0-65029-6	605
REC3F3-01005-0	3F3-01005-0	617
REC3F3-01024-0	3F3-01024-0	617
REC3F3-01303-1	3F3-01303-1	618
REC3F3-02104-0	3F3-02104-0	621
REC3F3-02305-1	3F3-02305-1	604
REC3G2-06040-2	3G2-06040-2	599
REC3G2-06060-2	3G2-06060-2	601
REC3G3-06021-1	3G3-06021-1	598
REC3T5-87121-6	3T5-87121-6	617
REC3T9-01005-0	3T9-01005-0	617
REC3T9-01032-0	3T9-01032-0	604
REC3T9-02104-0	3T9-02104-0	621
REC40135		595
REC40145		595
REC40155		595
REC40165		595
REC41-16056	369-00021-0	608-619
REC41-16056	3C8-00021-0	612
REC41-803680002	350-00021-0	610-619
REC41-803680003	3C8-00021-0	611-620
REC41-8036801	3B2-00021-0	609-619
REC41-825713002	332-00021-0	610-619
REC43-16138	309-64020-0	626
REC43-803739	350-06401-0	626
REC43-803739T03	3H8-640100	626
REC43-803740	350-06401-0	626
REC43-803740T02	3H8-64020-0	626
REC43-803741	362-64215-0	626
REC43-803741T03	3H8-64030-0	626
REC43-812944	369-64010-2	626
REC43-8129451	369-64030-2	626
REC44-195133	369-64211-1	626
REC45-161351	369-64301-0	626
REC45-803738	350-64301-0	626
REC45-8037381	350-64302-0	626
REC53-16057	334-00024-1	611-612-620
REC53-16057	350-00024-1	608-609-610-619-620
REC5GH-13440-00	3R3R76150M	589-596
REC5GH-13440-00	3R0-07615-0	596
REC5GH-13440-00	5GH-13440-00	596
REC5W40U3		595
REC5W40U6		595
REC629-803674	350-00040-0	610-619
REC629-8036741	3B2-00040-0	609-619
REC629-813047T01	336-00040-1	611-620
REC650-24351-51		591
REC66M-W0093-01	3V1-87122-0	597
REC696-W0093-00	345-87122-4	597
REC6A1-W0093-01	3F0-87122-2	597
REC6E5-24351-51		591
REC6G1-W0093-00	369-87122-1	597
REC6G1-W0093-00	3B2-87122-0	597
REC6H1-W0093-01-00	346-87122-0	597
REC6H3-W0093-02	346-87122-0	597
REC6H4-W0093-03	3F3-87122-1	597
REC6L2-W0093-00	3G2-87122-2	597
REC6L8-G3118-01	332S62102-1	625
REC70720		594
REC779-803677	350-00001-0	619
REC779-803677	350-00001-1	610
REC779-803677T02	351-00001-1	610-619
REC779-804886	3B2-00001-0	609-619
REC779-879194T01	346-00001-1	611-620
REC779-96152	3C8-00001-3	620
REC779-9615T	369-00001-0	608-619
REC779-9615T	3C8-00001-3	612
REC803673	350-00061-0	610
REC803751	350-65011-1	605
REC804898	3B2-63600-1	603
REC80W90U3	990A0-01E81-01Q	595
REC80W90U6	990A0-01E81-01Q	595
REC813046002	369-00061-0	608
REC8130461	334-00061-0	611
REC84419M	345-87122-0	597
REC8537312	350-04005-0	596
REC855676002	3R3-01030-0	589-603
REC855686		592
REC879147T96	362-64211-0	626
REC8M0065585	350-01215-5	618
REC8M0076368	369-64301-0	626
REC8M0080349	346-00011-0	612-620
REC8M0080357	351-00011-0	608-610-619
REC90340-08002	332-60005-2	623
REC90430-08020	332-60006-0	623
REC90794-46866		594
REC90794-46868		594
RECOBBRACKET		592
RECOBELEMENT		593
RECOBFILALU		593
RECOBFILTER		593
RECYS-225-15		594
RM35-802893Q		592
RM92-858026QB1U6		595
RM92-858027QB1U3		595
RM92-8M0086220U6		595
RM92-8M0086221U3		595
S		
SIE18-8013		590
SIE18-8015		590
SOL3411-130-19	3C7-64554-0	628
SOL3411-130-21		628
SOL3411-133-17	3C7-64541-0	628
SOL3411-135-15	3C7-64536-0	628
SOL3411-138-13	3B7-64527-1	628
SOL3411-140-11	3B7-64523-1	628
SOL3413-125-19	3C7-64554-0	628
SOL3413-125-21		628
SOL3413-128-17	3C7-64541-0	628
SOL3413-130-15	3C7-64536-0	628
SOL3413-133-13	3B7-64527-1	628
SOL3431-130-19	3C7-64554-0	628
SOL3431-130-21		628
SOL3431-133-17	3C7-64541-0	628
SOL3431-135-15	3C7-64536-0	628
SOL5011-078-07		628
SOL5011-078-08		628
SOL5011-085-07	3B2-64513-0	628
SOL5011-085-08	3B2-64515-0	628
SOL5011-085-09	3B2-64517-0	628
SOL5111-093-07	362-64105-0	628
SOL5111-093-08	362-64103-0	628
SOL5111-093-09	362-64101-0	628
SOL5111-093-10	362-64108-0	628
SOL5111-093-11		628
SOL5211-099-09	346-64101-5	628
SOL5211-099-10	346-64102-5	628
SOL5211-099-11	346-64103-5	628
SOL5211-099-12		628
SOL5211-099-13	346-64104-5	628
SOL5311-110-15	3E3-64536-0	628
SOL5311-110-16		628
SOL5311-110-17		628
SOL5311-111-13	3E3-64528-0	628
SOL5311-111-14	3E3-64536-0	628
SOL5311-114-12	348-64103-0	628
SOL5311-116-11	348-64102-0	628
SOL5311-121-09	361-64114-0	628
SOL5311-122-07		628
SOL5311-122-08	361-64113-0	628
SOL5313-105-13	3E3-64528-0	628
SOL5313-105-14	3E3-64536-0	628
SOL5313-108-12	348-64103-0	628
SOL5313-111-11	348-64102-0	628
SOL5313-118-09	361-64114-0	628
SOL9311-111-13		629
SOL9311-114-12		629
SOL9411-132-19		629
SOL9411-132-21		629
SOL9411-133-17		629
SOL9411-135-15		629
SOL9411-138-13		629
SOL9411-140-09		629
SOL9411-140-11		629

REF	R.O. / OEM	
SOL9431-130-19		629
SOL9431-130-21		629
SOL9431-133-17		629
SOL9431-135-15		629
SOL9431-138-13		629
SOL9432-130-19		629
SOL9432-133-17		629
SOL9432-135-15		629
SOL9432-138-13		629
SOL9511-143-21		629
SOL9511-145-19		629
SOL9511-148-17		629
SOL9511-150-15		629
SOL9511-153-13		629
SOL9511-155-11		629
SOL9511-160-13		629
SOL9531-140-19		629
SOL9512-143-21		629
SOL9512-145-19		629
SOL9512-148-17		629
SOL9512-150-15		629
SOL9531-140-21		629
SOL9531-140-23		629
SOL9531-143-17		629
SOL9531-145-15		629
SOL9532-140-19		629
SOL9532-140-21		629
SOL9532-140-23		629
SOL9532-143-17		629
SOL9532-145-15		629

REF	R.O. / OEM	
SOL9571-148-23		629
SOL9571-150-21		629
SOL9571-153-19		629
SOL9571-155-17		629
SOL9571-158-15		629
SOL9572-148-23		629
SOL9572-150-21		629
SOL9572-153-19		629
SOL9572-155-17		629
SOL9572-158-15		629
SOLRBX-109		629
SOLRBX-112		629
SOLRBX-116		629
[redacted]		
TEN01250	338-60218-2	589-607
TEN01251	369-60218-1	607
TEN01252	348-60217-0	607
TEN01253	3C8-60217-1	589-607
TEN01254	3C7-60218-2	607
TEN01255	3B7-60217-0	607
TEN01256	3B7-60218-1	589-607
TEN01257	3M2-60218-0	607
TEN01258	5338602182A0	589-607
TEN01259	3H6-60218-0	589-607
TEN01260	3B7-60217-0	589-607
TEN01408	HZV4-12155-A00	607
TEN01408/1	HZV5-12155-000	607
TRI305-0386		590
TRI305-0566		590

RO / OEM --> REF

R.O. / OEM	REF	
101-00121-0	REC26-803514	609
172-36008-0	PAF8-05000003	616
309-00131-0	PAT3.6-04000006	615
309-01005-2	REC309-01005-2	617
309-60111-0	PAF8-04000101	623
309-64020-0	REC43-16138	626
309-65021-1	CEF500396	604
332-00021-0	PAF8-05020105	615
332-00021-0	REC41-825713002	610-619
332-00024-0	PAF8-05020105	620
332-60005-2	REC90340-08002	623
332-60006-0	REC90430-08020	623
332-62101-0	PAF4-01010003	625
332S62102-1	REC6L8-G3118-01	625
334-00024-1	REC53-16057	611-612-620
334-00061-0	REC8130461	611
334-65021-0	CEF500383	589-604
336-00040-1	REC629-813047T01	611-620
338-00042-0	REC31-8036752	609-619
338-60218-2	CM33860-2181	606
338-60218-2	TEN01250	589-607
344-67177-0	PAGB/T7940.1-M6	625
345-00042-0	REC345-00042-0	611-612-620
345-00113-0	REC30-16049T01	611
345-62441-0	PAF8-01000100	625
345-65015-0	PAF8-04040002	623
345-65021-0	CEF500382	589-604
345-65021-0	REC345-65021-0	604
345-65021-1	CEF500379	604
345-87122-0	REC84419M	597
345-87122-4	REC696-W0093-00	597
346-00001-1	REC779-879194T01	611-620
346-00011-0	REC39-16054A5	611-620
346-00011-0	REC8M0080349	612-620
346-01005-0	REC346-01005-0	617
346-01032-0	PAF8-05010005	615
346-01215-0	REC26-8537072	618
346-02230-0	PAF4-05000300	595
346-60111-0	REC26-161301	618
346-62421-1	PAF8-01010102	625
346-64101-5	SOL5211-099-09	628
346-64102-5	SOL5211-099-10	628
346-64103-5	SOL5211-099-11	628
346-64104-5	SOL5211-099-13	628
346-65013-0	REC26-161622	618
346-67114-0	PAF8-05000018	623
346-76010-OM	PH130-0080	600
346-87122-0	REC6H1-W0093-01-00	597
346-87122-0	REC6H3-W0093-02	597
348-60217-0	CM348-60217-0M	606
348-60217-0	TEN01252	607
348-64102-0	SOL5311-116-11	628
348-64102-0	SOL5313-111-11	628
348-64103-0	SOL5311-114-12	628
348-64103-0	SOL5313-108-12	628
350-00001-0	REC779-803677	619
350-00001-1	REC779-803677	610
350-00011-0	REC39-803678A1	610
350-00021-0	REC41-803680002	610-619
350-00024-1	PAF15-07020005	615-620
350-00024-1	REC53-16057	608-609-610-619-620
350-00040-0	REC629-803674	610-619
350-00042-0	REC31-16052	608-610-619
350-00061-0	REC803673	610
350-00121-0	REC26-803667	618
350-01005-0	REC350-01005-0	617
350-01215-5	REC8M0065585	618
350-01303-0	REC346-01303-0	618
350-01303-0	REC350-01303-0	618
350-04005-0	REC8537312	596
350-06401-0	REC43-803739	626
350-06401-0	REC43-803740	626
350-61012-1	REC350-61012-1	618
350-62121-1	PAF8-01010200	625
350-62415-0	PAJASOF40435-022	625
350-62417-0	PAF8-01000002	625
350-62423-0	PAF8-01000001	625
350-64301-0	REC45-803738	626
350-64302-0	REC45-8037381	626
350-65011-1	REC803751	605
350-76010-0	PH130-0061	600
351-00001-1	REC779-803677T02	610-619
351-00011-0	REC8M0080357	608-610-619
351-01005-0	REC351-01005-0	617
353-06260-0	REC353-06260-0	601
353-06260-2	REC353-06260-0	601
353-76010-4	PH130-0048	600
356-00043-0	REC31-8130482	611
361-64113-0	SOL5311-122-08	628
361-64114-0	SOL5311-121-09	628
361-64114-0	SOL5313-118-09	628
362-64101-0	SOL5111-093-09	628
362-64103-0	SOL5111-093-08	628
362-64105-0	SOL5111-093-07	628
362-64108-0	SOL5111-093-10	628
362-64211-0	REC879147T96	626
362-64215-0	REC43-803741	626
369-00001-0	REC779-9615T	608-619
369-00021-0	REC41-16056	608-619
369-00043-0	REC31-813048	608
369-00061-0	REC813046002	608
369-00122-0	REC26-16051	608
369-00132-0	PAF8-05000024	613
369-01215-0	REC26-16703	618
369-02230-0	PAF4-05000300	595
369-03231-0	REC16253	597
369-03302-0	REC27-16274	596
369-03303-0	REC16275	596
369-03306-0	REC16325	596
369-03307-0	REC27-16326	596
369-06021-0	REC369-06021-0	598
369-60111-0	PAF8-04040004	623
369-60218-1	TEN01251	607
369-60223-0	REC26-16162	618
369-62122-2	PAF8-01010200	625
369-62439-1	PAF8-01010105	625
369-64010-2	REC43-812944	626
369-64014-0	PAF8-04000012-1	623
369-64015-0	PAF8-04000012-2	623
369-64030-2	REC43-8129451	626
369-64032-0	PAF8-04000012	623
369-64121-0	PAF15-06000016	623
369-64211-1	REC44-195133	626

R.O. / OEM	REF	
369-64223-0	**PAF8-04000305**	623
369-64301-0	**REC45-161351**	626
369-64301-0	**REC8M0076368**	626
369-65011-0	**REC16157**	605
369-65021-1	**CEF500377**	589-604
369-65025-0	**REC16159**	605
369-66112-1	**PAF8-01010104**	625
369-84398-0	**PAF8-05000025**	615
369-87122-1	**REC6G1-W0093-00**	597
393-62437-0	**PAF8-01010103**	625
394-702500M	**GS31015**	592
398-62103-0	**PAF4-01010002**	625
3A0-06040-1	**REC3A0-06040-1**	599
3A0-76079-0	**PAF8-05000006**	613
3A106-2402M	**REC3A106-2602M**	601
3A106-2601M	**REC3A106-2602M**	601
3A106-2602M	**REC3A106-2602M**	601
3AA-05004-0	**PAF8-05050004**	616
3AA-05013-0	**PAF8-05050018**	616
3AA-05019-0	**PAF4-04130101**	616
3AA-06021-0	**PAF8-05000300**	598-613
3AA-06060-0	**PAF8-05000400**	613
3AA-06060-00	**PAF8-05000400**	601
3AA060600M	**PAF8-05000400**	601
3AA-06091-0	**PAF8-05000600**	613
3AA-07203-0	**PAF8-05030005**	615
3AA-07225-0	**PAF8-05030009**	615
3AA760100	**PH130-0061**	600
3AC-02230-0	**PAF15-07080000**	594
3AD-02230-0	**PAF15-07080000**	594
3B1-66145-0	**PAF8-03010007**	623
3B2-00001-0	**REC779-804886**	609-619
3B2-00011-0	**REC39-803678A3**	609-619
3B2-00021-0	**REC41-8036801**	609-619
3B2-00040-0	**REC629-8036741**	609-619
3B2-00051-0	**REC26-85370711**	609
3B2-01005-0	**REC3B2-01005-0**	617
3B2-01215-0	**PAF8-02000002**	625
3B2-01303-0	**REC3B2-01303-0**	618
3B2-63600-1	**REC804898**	603
3B2-64010-0	**PAF8-04010000**	623-626
3B2-64020-0	**PAF8-04000003**	623-626
3B2-64023-0	**PAF8-04000004-1**	623
3B2-64030-0	**PAF8-04000014**	623-626
3B2-64215-0	**PAF8-04000303**	623-626
3B2-64230-1	**PAF8-04000019**	623
3B2-64513-0	**SOL5011-085-07**	628
3B2-64515-0	**SOL5011-085-08**	628
3B2-64517-0	**SOL5011-085-09**	628
3B2-65011-0	**PAF8-04000010**	605-623
3B2-65016-0	**PAF8-04000009**	623
3B2-65016-0	**PAF8-04000013**	623
3B2-65018-0	**PAF8-04000008**	623
3B2-65020-0	**PAF8-04000005**	623
3B2-65021-1	**CEF500344**	589-604
3B2-65021-1	**PAF8-04000200**	623
3B2-65021-1	**REC3B2-65021-1**	604
3B2-65022-0	**PAF8-04000021**	623
3B2-65025-0	**PAF8-04000007**	605-623
3B2-65029-0	**PAF8-04000006**	623
3B2-66113-0	**PAF8-03010005**	623
3B2-66315-0	**PAF8-01010109**	625
3B2-66321-1	**PAF8-01010108**	625
3B2-702501M	**GS31088**	591
3B2-702601M	**GS31018**	592
3B2-702801M	**GS31016**	592
3B2-87122-0	**REC6G1-W0093-00**	597
3B2S60100-0	**PAF8-04040000**	623
3B2S60101-0	**PAF8-04040001**	623
3B2W64517-0	**PAF8-04050000**	623
3B7-02230-0	**PAF15-07080000**	594
3B7-06305-0	**PAF8-05000007**	613
3B7-60217-0	**CM3B7-602170**	606
3B7-60217-0	**TEN01255**	607
3B7-60217-0	**TEN01260**	589-607
3B7-60218-1	**CM3B7-60218-0**	606
3B7-60218-1	**TEN01256**	589-607
3B7-64523-1	**SOL3411-140-11**	628
3B7-64527-1	**SOL3411-138-13**	628
3B7-64527-1	**SOL3413-133-13**	628
3B7-65021-2	**CEF500388**	604

R.O. / OEM	REF	
3B7-65021-2	**REC3B7-65021-2**	604
3B7-87121-7	**REC3B7-87121-1**	617
3C7-60218-2	**TEN01254**	607
3C7-64536-0	**SOL3411-135-15**	628
3C7-64536-0	**SOL3413-130-15**	628
3C7-64536-0	**SOL3431-135-15**	628
3C7-64541-0	**SOL3411-133-17**	628
3C7-64541-0	**SOL3413-128-17**	628
3C7-64541-0	**SOL3431-133-17**	628
3C7-64554-0	**SOL3411-130-19**	628
3C7-64554-0	**SOL3413-125-19**	628
3C7-64554-0	**SOL3431-130-19**	628
3C7-65021-1	**CEF500388**	604
3C7760-2181	**CM3C760-2181**	606
3C7760-2181	**CM3C760-2181A**	606
3C8-00001-3	**REC779-96152**	620
3C8-00001-3	**REC779-9615T**	612
3C8-00021-0	**REC41-16056**	612
3C8-00021-0	**REC41-803680003**	611-620
3C8-00113-0	**REC31-855553**	612
3C8-01005-4	**REC3C8-01005-4**	617
3C8-01024-0	**REC3C8-01024-0**	617
3C8-01303-4	**REC3C8-01303-4**	618
3C8-02104-0	**REC3C8-02104-0**	621
3C8-02305-0	**REC3C8-02305-0**	621
3C8-03125-0	**REC162532**	597
3C8-04028-0	**REC27-8555691**	596
3C8-60217-1	**CM3C8-60217-0**	606
3C8-60217-1	**TEN01253**	589-607
3C8-62104-1	**PAF4-01010005**	625
3C8-66116-0	**PAF8-03010006**	623
3C8-76010-1	**PH130-0006**	600
3C8760101	**PH130-0006**	600
3C8760101M	**PH130-0006**	600
3E3-64528-0	**SOL5311-111-13**	628
3E3-64528-0	**SOL5313-105-13**	628
3E3-64536-0	**SOL5311-110-15**	628
3E3-64536-0	**SOL5311-111-14**	628
3E3-64536-0	**SOL5313-105-14**	628
3F0-06060-0	**REC3F0-06060-0**	601
3F0-65029-6	**REC3F0-65029-0**	605
3F0-87122-2	**REC6A1-W0093-01**	597
3F3-01005-0	**REC3F3-01005-0**	617
3F3-01024-0	**REC3F3-01024-0**	617
3F3-01303-1	**REC3F3-01303-1**	618
3F3-02104-0	**REC3F3-02104-0**	621
3F3-02305-1	**REC3F3-02305-1**	604
3F3-87122-1	**REC6H4-W0093-03**	597
3G2-06040-2	**REC3G2-06040-2**	599
3G2-06060-2	**REC3G2-06060-2**	601
3G2-87122-2	**REC6L2-W0093-00**	597
3G3-06021-1	**REC3G3-06021-1**	598
3H6-07223-0	**PAF8-05030007**	615
3H6-07611-0	**PAF15-07010100**	598-613
3H6-07612-0	**PAF15-07010101**	613
3H6-60218-0	**CM3H6-60218-000**	606
3H6-60218-0	**CM3H6-60218-000A**	606
3H6-60218-0	**TEN01259**	589-607
3H8-02093-0	**PAF8-05010002**	615
3H8-07025-0	**PAF8-05030011**	615
3H8-07226-0	**PAF8-005030010**	615
3H8-07237-0	**PAF15-07040304**	615
3H8-10062-2	**PAF8-05030400**	615
3H8-640100	**REC43-803739T03**	626
3H8-64020-0	**REC43-803740T02**	626
3H8-64030-0	**REC43-803741T03**	626
3K9-05223-0	**PAF8-01010112**	625
3M2-60218-0	**CM3M2-60218-1**	606
3M2-60218-0	**TEN01257**	607
3R0-07238-0	**PAF15-07040303**	615
3R0-66308-0	**PAF8-05000021**	613
3R1-05003-1	**PAF8-05050006**	616
3R1-05007-0	**PAF8-05050009**	616
3R1-05012-0	**PAF8-05050007**	616
3R1-05125-0	**PAF8-05050003**	616
3R1-05131-0	**PAF4-04130102**	616
3R3-01030-0	**REC855676002**	589-603
3R3-07227-0	**PAF8-05030015**	615
3R3-07405-1	**PAF15-04000002**	625
3R3-07406-0	**PAF15-04000003**	625
3R3-61017-0	**PAF8-00000003**	615

R.O. / OEM	REF	
3R3R76150M	**REC5GH-13440-00**	589-596
3T5-06920-0	**PAF8-05000011**	613
3T5-10131-0	**PAF4-04000019**	615
3T5-87121-6	**REC3T5-87121-6**	617
3T9-01005-0	**REC3T9-01005-0**	617
3T9-01032-0	**REC3T9-01032-0**	604
3T9-02104-0	**REC3T9-02104-0**	621
3V1-00001-0	**PAF8-05020101**	615-620
3V1-00011-0	**REC39-8M0055809**	615
3V1-00030-1	**PAF8-05020001**	615
3V1-00040-0	**PAF8-05020200**	615-620
3V1-00121-0	**PAF8-05010012**	615
3V1-01024-0	**PAF8-05000002**	615
3V1-01303-0	**PAF8-00000004**	615
3V1-02010-1	**PAF8-05000008**	615
3V1-02011-0	**PAF15-07000017**	615
3V1-02104-0	**PAF8-05000009**	615
3V1-02305-0	**PAF8-05000100**	615
3V1-02305-0	**PAF8-05010004**	615
3V1-03952-0	**PAF15-07000018**	615
3V1-05104-1	**PAF8-05050005**	616
3V1-05259-0	**PAF8-05050002**	616
3V1-06023-0	**PAF8-05090000W**	599
3V1-06040-0	**PAF8-05000500**	599-613
3V1060400	**PAF8-05000500**	599
3V1060400M	**PAF8-05000500**	599
3V1-06071-0	**PAF8-05000200**	599-613
3V1-06302-0	**PAF8-05000013**	616
3V1-06308-0	**PAF8-05000012**	616
3V1-07010-0	**PAF8-05030008**	615
3V1-07201-0	**PAF8-05030001**	615
3V1-07202-0	**PAF8-05030002**	615
3V1-07205-0	**PAF8-05030004**	615
3V1-07221-0	**PAF8-05030006**	615
3V1-07235-0	**PAF8-05030200**	615
3V1-07407-0	**PAF8-05010009**	615
3V1-07410-0	**PAF8-05000800**	615
3V1-07421-0	**PAF8-00000200**	615
3V1-07440-0	**PAF8-02000003**	625
3V1-07600-0	**PAF8-05030300**	615
3V1-07653-0	**PAF8-05030012**	615
3V1-10045-0	**PAF8-05000004**	589-615
3V1-10060-0	**PAF8-05010014**	615
3V1-10063-0	**PAF8-05010015**	615
3V1-10068-0	**PAF8-05010016**	615
3V1-60041-0	**PAF8-04000016**	623
3V1-60042-0	**PAF8-04000015**	623
3V1-60211-0	**PANSKFJ-1516**	623
3V1-61208-0	**PAF8-02000005**	625
3V1-61220-0	**PAF8-02000004**	625
3V1-61301-1	**PAF8-02000100**	625
3V1-61302-0	**PAF8-00000002**	625
3V1-61313-0	**PAF8-01000003**	625
3V1-61324-0	**PAGB/T889.1-M8**	625
3V1-61333-1	**PAF8-00000100**	625
3V1-63508-0	**PAF8-05000020**	623
3V1-63622-0	**PAF8-05000019**	623
3V1-64211-0	**PAF8-04000301**	623-626
3V1-64221-0	**PAF8-04000302**	623
3V1-64306-1	**PAF8-04020001S**	623-626
3V1-64307-1	**PAF8-04020001L**	623-626
3V1-65100-0	**PAF8-02000006(S)**	625
3V1-65110-0	**PAF8-02000006(L)**	625
3V1-65203-0	**PAF8-02000009**	625
3V1-65206-0	**PAF8-02000007**	625
3V1-66187-0	**PAF8-03010001**	623
3V1-66211-0	**PAF8-03000010**	623
3V1-66225-0	**PAF8-03010003**	623
3V1-66302-0	**PAF8-03000011**	623
3V1-66313-0	**PAF8-01010106**	625
3V1-87122-0	**REC66M-W0093-01**	597
3V1602170	**CM3V1-60217-0**	606
3V1602170	**CM3V1-60217-0A**	606
3V1B01001-0	**PAF8-05030100**	615
3V1B01100-0	**PAF8-05010000**	615
3V2-03100-2	**PAF8-05040000**	596
3Y7-02234-0	**REC35-802893Q01**	592
5GH-13440-00	**REC5GH-134400-00**	596
5338602182A0	**CM5338602182A0**	606
5338602182A0	**CM5338602182A0A**	606
5338602182A0	**TEN01258**	589-607

R.O. / OEM	REF	
646-24251-02	**REC35-80365M**	595
910113-0830	**PAGB/T5783-M8X30**	625
910184-5620	**PAGB/T5783-M6X20**	625
910184-5620	**PAGB/T97.1-6**	625
940113-0800	**PAF8-02000100**	625
940121-1200	**PAT15-04000011**	613
945303-0500	**PAGB/T896-5**	625
9603-3-6204	**REC30-16049**	608-609
9643-3-6004	**REC30-898101936**	619
96603-3-6305	**REC30-160494**	610
9701-1-1005	**NGKB7HS-10**	600
9701-1-1006	**NGKB8HS-10**	600
9701-1-1010	**NGKBP7HS-10**	600
9701-1-1013	**NGKBPR6HS-10**	600
9701-1-1014	**NGKBPR7HS-10**	600
9701-1-1015	**NGKBR7HS-10**	600
9701-1-1103	**NGKDCPR6E**	589-600
9701-1-1110	**NGKBR8HS-10**	600
9701-1-1111	**NGKIZFR6**	600
9701-1-1121	**NGKIKR6G8**	600
9791-1-1109	**NGKIZFR5J**	600
98AB-5-0330	**PAF8-05000024**	615
98AH10-0120	**PAF8-05000017**	615
990A0-01E81-01Q	**REC80W90U3**	595
990A0-01E81-01Q	**REC80W90U6**	595
990C0-10W40-GLN	**REC10W40U3**	595
990C0-10W40-GLN	**REC10W40U6**	595
99998-0MA2	**GS31019**	591
HPLM-15400-PE	**REC15400-PLM-A01PE**	596
HPNB-37510-003	**REC37510-PNB-003**	598
HZV4-12155-A00	**TEN01408**	607
HZV4-30580-013	**REC30580-ZV4-013**	599
HZV5-12155-000	**TEN01408/1**	607
HZV5-19210-003	**CEF500338**	604
HZV5-19210-003	**REC19210-ZV5-003**	604
HZV5-19300-043	**REC19300-ZV5-043**	603
HZW1-19210-B04	**CEF500337**	604
HZW1-19210-B04	**REC19210-ZW1-B02**	604
HZW9-19300-003	**PAF15-07000031**	603
HZY3-06192-000	**REC06192-ZY3-000**	605
HZY3-16911-010	**REC16911-ZY3-010**	595
HZY3-19210-003	**CEF500391**	604
HZY3-19210-003	**REC19210-ZY3-003**	604
HZY3-31200-003	**PH130-0070**	601
HZY6-06192-000	**REC06192-ZY6-000**	605
HZY6-17109-000	**REC17109-ZY6-000**	621
HZY6-31200-003	**REC31200-ZY6-003**	601
HZY6-35668-003	**REC35668-ZY6-003**	598
HZZ3-31909-003	**NGKLMAR6C-9**	600
HZZ5-16911-003	**REC16911-ZZ5-003**	595

SELVA

ES

GUÍA MANTENIMIENTO	636
SISTEMA DE REFRIGERACIÓN	638
ÁNODOS	638
ÁNODO CANADA METAL	638
ÁNODO TECNOSEAL	639
IMPULSORES	640
GUÍA IMPULSORES	640
SISTEMA DE PROPULSIÓN	641
HÉLICES ALUMINIO E INOXIDABLE DE 3 Y 4 PALAS	641
GUÍA HÉLICES CON NÚCLEO INTEGRADO	642
REF --> RO	643
RO --> REF	643

EN

MAINTENANCE GUIDE	636
COOLING SYSTEM	638
ANODES	638
ANODES CANADA METAL	638
ANODES TECNOSEAL	639
IMPELLERS	640
IMPELLERS GUIDE	640
PROPULSION SYSTEM	641
3 & 4 BLADE ALUMINIUM & SS PROPELLERS	641
PROPELLERS APPLICATION WITH RUBBER HUB	642
REF --> OEM	643
OEM --> REF	643

IT

GUIDA MANUTENZIONE	636
SISTEMA DI RAFFREDDAMENTO	638
ANODI	638
ANODI CANADA METAL	638
ANODI TECNOSEAL	639
GIRANTE	640
GUIDA GIRANTE	640
SISTEMA DI PROPULSIONE	641
ELICHE ALLUMINIO E INOX DA 2 E 4 PALE	641
GUIDA ELICHE CON MOZZO	642
REF --> RO	643
RO --> REF	643

FR

GUIDE MAINTENANCE KITS	636
SYSTÈME DE REFROIDISSEMENT	638
ANODES	638
ANODE CANADA METAL	638
ANODE TECNOSEAL	639
TURBINES	640
GUIDE DE TURBINES	640
SYSTEME DE PROPULSION	641
HÉLICE ALUMINIUM ET INOX 3 ET 4 PALES	641
GUIDE DES HÉLICES ET MOYEUX	642
REF --> RO	643
RO --> REF	643

SELVA

	REF					
RAY8	NGKBR6HS-10	BUJÍA	SPARK PLUG	CANDELE	BOUGIE	2
	CM6G8-11325-00	ÁNODO	ANODE	ANODO	ANODE	1
	CM68T-45251-00	ÁNODO	ANODE	ANODO	ANODE	1
	REC68T-44352-00	TURBINA	IMPELLER	GIRANTE	TURBINE	1
	REC68T-24251-00	FILTRO COMBUSTIBLE	FUEL FILTER	FILTRO COMBUSTIBILE	FILTRE À ESSENCE	1
	PAF15-07000031	TERMOSTATO	THERMOSTAT	TERMOSTATO	TERMOSTAT	1
	REC68T-46241-00	CORREA DISTRIBRIBUCIÓN	TIMING BELT	CINGHIE DISTRIBUZIONE	COURROIE DE DISTRIBUTION	1
PIKE 9.9	NGKBR6HS-10	BUJÍA	SPARK PLUG	CANDELE	BOUGIE	2
	CM6G8-11325-00	ÁNODO	ANODE	ANODO	ANODE	1
	CM68T-45251-00	ÁNODO	ANODE	ANODO	ANODE	1
	REC68T-44352-00	TURBINA	IMPELLER	GIRANTE	TURBINE	1
	REC68T-24251-00	FILTRO COMBUSTIBLE	FUEL FILTER	FILTRO COMBUSTIBILE	FILTRE À ESSENCE	1
	PAF15-07000031	TERMOSTATO	THERMOSTAT	TERMOSTATO	TERMOSTAT	1
	REC68T-46241-00	CORREA DISTRIBRIBUCIÓN	TIMING BELT	CINGHIE DISTRIBUZIONE	COURROIE DE DISTRIBUTION	1
WAHOO 15/20	NGKDPR6EB-9	BUJÍA	SPARK PLUG	CANDELE	BOUGIE	2
	CM6G8-11325-00	ÁNODO	ANODE	ANODO	ANODE	4
	CM15026	ÁNODO	ANODE	ANODO	ANODE	1
	TEN01123	ÁNODO	ANODE	ANODO	ANODE	1
	TEN01154AL	ÁNODO	ANODE	ANODO	ANODE	1
	REC63V-44352-01	TURBINA	IMPELLER	GIRANTE	TURBINE	1
	REC61N-24563-10	FILTRO COMBUSTIBLE	FUEL FILTER	FILTRO COMBUSTIBILE	FILTRE À ESSENCE	1
	REC5GH-13440-60	FILTRO DE ACEITE	OIL FILTER	FILTRO OLIO	FILTRE A HUILE	1
	REC6AH-12411-00	TERMOSTATO	THERMOSTAT	TERMOSTATO	TERMOSTAT	1
	PAF20-05000003	CORREA DISTRIBRIBUCIÓN	TIMING BELT	CINGHIE DISTRIBUZIONE	COURROIE DE DISTRIBUTION	1
KINGFISH 25	NGKDPR6EB-9	BUJÍA	SPARK PLUG	CANDELE	BOUGIE	2
	CM6G8-11325-00	ÁNODO	ANODE	ANODO	ANODE	1
	CM6BL-11325-00	ÁNODO	ANODE	ANODO	ANODE	2
	CM6E0-45251-11A	ÁNODO	ANODE	ANODO	ANODE	1
	CM62Y-11325-00	ÁNODO	ANODE	ANODO	ANODE	1
	CM61N-45251-01	ÁNODO	ANODE	ANODO	ANODE	1
	PAF25-04000021	ANODO TAB,TRIM	ANODE TAB,TRIM	ANODO TAB,TRIM	ANODE TAB,TRIM	1
	REC6H4-44352-02	TURBINA	IMPELLER	GIRANTE	TURBINE	1
	REC61N-24563-10	FILTRO COMBUSTIBLE	FUEL FILTER	FILTRO COMBUSTIBILE	FILTRE À ESSENCE	1
	REC5GH-13440-60	FILTRO DE ACEITE	OIL FILTER	FILTRO OLIO	FILTRE A HUILE	1
	PAF15-07000031	TERMOSTATO	THERMOSTAT	TERMOSTATO	TERMOSTAT	1
	REC6C5-46241-00	CORREA DISTRIBRIBUCIÓN	TIMING BELT	CINGHIE DISTRIBUZIONE	COURROIE DE DISTRIBUTION	1
ARUANA EFI 40	NGKDPR6EB-9	BUJÍA	SPARK PLUG	CANDELE	BOUGIE	3
	CM6G8-11325-00	ÁNODO	ANODE	ANODO	ANODE	4
	CM688-45251-01	ANODO (Modelos S)	ANODE (S Models)	ANODO (Modelli S)	ANODE (Modèles S)	1
	CM6E0-45251-11A	ÁNODO	ANODE	ANODO	ANODE	1
	CM67C-45371-00	ÁNODO	ANODE	ANODO	ANODE	1
	CM67C-45251-00	ÁNODO	ANODE	ANODO	ANODE	1
	CM62Y-11325-00	ÁNODO	ANODE	ANODO	ANODE	1
	REC6H4-44352-02	TURBINA	IMPELLER	GIRANTE	TURBINE	1
	REC6D8-WS24A-00	FILTRO COMBUSTIBLE	FUEL FILTER	FILTRO COMBUSTIBILE	FILTRE À ESSENCE	1
	REC5GH-13440-60	FILTRO DE ACEITE	OIL FILTER	FILTRO OLIO	FILTRE A HUILE	1
	PAF15-07000031	TERMOSTATO	THERMOSTAT	TERMOSTATO	TERMOSTAT	1
	REC6C5-46241-00	CORREA DISTRIBRIBUCIÓN	TIMING BELT	CINGHIE DISTRIBUZIONE	COURROIE DE DISTRIBUTION	1
DORADO EFI 40XS-XRS, 50 /60 XS&XSR	NGKDPR6EB-9	BUJÍA	SPARK PLUG	CANDELE	BOUGIE	4
	PAF15-07000031	ÁNODO	ANODE	ANODO	ANODE	1
	CM62Y-11325-00	ÁNODO	ANODE	ANODO	ANODE	1
	CM6G8-11325-00	ÁNODO	ANODE	ANODO	ANODE	4
	CM6E0-45251-11A	ÁNODO	ANODE	ANODO	ANODE	3
	CM67C-45371-00	ÁNODO	ANODE	ANODO	ANODE	1
	CM67C-45251-00	ÁNODO	ANODE	ANODO	ANODE	1
	REC6H3-44352-00	TURBINA	IMPELLER	GIRANTE	TURBINE	1
	REC6D8-WS24A-00	FILTRO COMBUSTIBLE	FUEL FILTER	FILTRO COMBUSTIBILE	FILTRE À ESSENCE	1
	REC5GH-13440-60	FILTRO DE ACEITE	OIL FILTER	FILTRO OLIO	FILTRE A HUILE	1
	PAF15-07000031	TERMOSTATO	THERMOSTAT	TERMOSTATO	TERMOSTAT	1
	REC6C5-46241-00	CORREA DISTRIBRIBUCIÓN	TIMING BELT	CINGHIE DISTRIBUZIONE	COURROIE DE DISTRIBUTION	1

	REF					
MURENA EFI 40XSR/ 70	NGKLKR7E	BUJÍA	SPARK PLUG	CANDELE	BOUGIE	4
	CM62Y-11325-00	ÁNODO	ANODE	ANODO	ANODE	1
	CM6G8-11325-00	ÁNODO	ANODE	ANODO	ANODE	3
	CM6E0-45251-11A	ÁNODO	ANODE	ANODO	ANODE	3
	CM67F-45371-00	ANODO TAB,TRIM	ANODE TAB,TRIM	ANODO TAB,TRIM	ANODE TAB,TRIM	1
	REC6H3-44352-00	TURBINA	IMPELLER	GIRANTE	TURBINE	1
	REC6D8-WS24A-00	FILTRO COMBUSTIBLE	FUEL FILTER	FILTRO COMBUSTIBILE	FILTRE À ESSENCE	1
	REC5GH-13440-60	FILTRO DE ACEITE	OIL FILTER	FILTRO OLIO	FILTRE A HUILE	1
	PAF15-07000031	TERMOSTATO	THERMOSTAT	TERMOSTATO	TERMOSTAT	1
	REC6C5-46241-00	CORREA DISTRIBRIBUCIÓN	TIMING BELT	CINGHIE DISTRIBUZIONE	COURROIE DE DISTRIBUTION	1
MARLIN EFI 100/ 100XSR	NGKLFR5A-11	BUJÍA	SPARK PLUG	CANDELE	BOUGIE	4
	CM15026	ÁNODO	ANODE	ANODO	ANODE	3
	CM67F-11325-01	ÁNODO	ANODE	ANODO	ANODE	2
	CM6H1-45251-02	ÁNODO	ANODE	ANODO	ANODE	1
	CM67F-45371-00	ANODO TAB,TRIM	ANODE TAB,TRIM	ANODO TAB,TRIM	ANODE TAB,TRIM	1
	REC67F-44352-00	TURBINA	IMPELLER	GIRANTE	TURBINE	1
	REC6D8-WS24A-00	FILTRO COMBUSTIBLE	FUEL FILTER	FILTRO COMBUSTIBILE	FILTRE À ESSENCE	1
	REC5GH-13440-00	FILTRO DE ACEITE	OIL FILTER	FILTRO OLIO	FILTRE A HUILE	1
	REC6D9-12411-00	TERMOSTATO	THERMOSTAT	TERMOSTATO	TERMOSTAT	1
	REC67F-46241-00	CORREA DISTRIBRIBUCIÓN	TIMING BELT	CINGHIE DISTRIBUZIONE	COURROIE DE DISTRIBUTION	1
TARPON EFI 115/ 115XSR	NGKLFR6A-11	BUJÍA	SPARK PLUG	CANDELE	BOUGIE	4
	CM15026	ÁNODO	ANODE	ANODO	ANODE	3
	CM67F-11325-01	ÁNODO	ANODE	ANODO	ANODE	2
	CM6G5-45251-01A	ÁNODO	ANODE	ANODO	ANODE	1
	CM6E5-45371-01A	ANODO TAB,TRIM	ANODE TAB,TRIM	ANODO TAB,TRIM	ANODE TAB,TRIM	1
	REC6E5-44352-01	TURBINA	IMPELLER	GIRANTE	TURBINE	1
	REC6D8-WS24A-00	FILTRO COMBUSTIBLE	FUEL FILTER	FILTRO COMBUSTIBILE	FILTRE À ESSENCE	1
	REC5GH-13440-00	FILTRO DE ACEITE	OIL FILTER	FILTRO OLIO	FILTRE A HUILE	1
	REC60V-12411-00	TERMOSTATO	THERMOSTAT	TERMOSTATO	TERMOSTAT	1
	REC67F-46241-00	CORREA DISTRIBRIBUCIÓN	TIMING BELT	CINGHIE DISTRIBUZIONE	COURROIE DE DISTRIBUTION	1
KILLER WHALE EFI 150/ 150XSR	NGKLFR5A-11	BUJÍA	SPARK PLUG	CANDELE	BOUGIE	4
	TEN01165	ÁNODO	ANODE	ANODO	ANODE	1
	CM63P-11325-01	ÁNODO	ANODE	ANODO	ANODE	1
	CM68T-11325-00	ÁNODO	ANODE	ANODO	ANODE	8
	CM63P-11325-11	ÁNODO	ANODE	ANODO	ANODE	4
	CM6G5-45251-01A	ÁNODO	ANODE	ANODO	ANODE	1
	CM67F-11325-01	ÁNODO	ANODE	ANODO	ANODE	2
	CM6J9-45371-01	ANODO TAB,TRIM R	ANODE TAB,TRIM R	ANODO TAB,TRIM R	ANODE TAB, TRIM R	1
	CM6K1-45371-02	ANODO TAB,TRIM L	ANODE TAB,TRIM L	ANODO TAB,TRIM L	ANODE TAB, TRIM L	1
	REC6E5-44352-01	TURBINA	IMPELLER	GIRANTE	TURBINE	1
	REC6P3-WS24A-00	FILTRO COMBUSTIBLE	FUEL FILTER	FILTRO COMBUSTIBILE	FILTRE À ESSENCE	1
	REC35-822626Q15	FILTRO DE ACEITE	OIL FILTER	FILTRO OLIO	FILTRE A HUILE	1
	REC67F-12411-01	TERMOSTATO	THERMOSTAT	TERMOSTATO	TERMOSTAT	1
	REC63P-46241-00	CORREA DISTRIBRIBUCIÓN	TIMING BELT	CINGHIE DISTRIBUZIONE	COURROIE DE DISTRIBUTION	1

SISTEMA DE REFRIGERACIÓN
COOLING SYSTEM
SISTEMA DI RAFFREDDAMENTO
SYSTÈME DE REFROIDISSEMENT

ÁNODO — ANODE — ANODI — ANODE

ZN	(KG)	AL	(KG)	OEM
CM55321-94900	0,51	CM55321-94900A	0,11	55320-94900

70, 90, 115, 140, 150 HP



ZN	(KG)	OEM
CM55320-98400	0,05	41811-98400

9.9 - 15 HP



ZN	(KG)	OEM
CM2504015	0,39	2504015

40 - 100 HP



ZN	(KG)	OEM
CM41811-98500	0,05	41811-98500

2.2 - 4 HP



ZN	(KG)	OEM
CM9005665	0,11	9005665

40 - 100 HP



ZN	(KG)	OEM
CM67C-45251-00	0,12	58.67C4525100



ZN	(KG)	OEM
CM2500010	0,10	2500010

6 - 8 - 9.9 - 15 HP



ZN	(KG)	OEM
CM2500065	0,10	2500065

25 - 40 HP



ZN	(KG)	OEM
CM9005655	0,03	9005655



ZN	(KG)	OEM
CM2500050	0,17	2500050

BEST 800 - S1000



ZN	(KG)	OEM
CM9005660	0,03	90056660



ZN	(KG)	OEM
CM55300-95500	0,08	55300-95500

2 - 8 HP

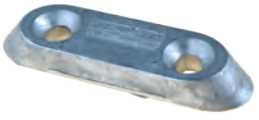

ZN	KG	OEM
CM82795M	0,20	25040151

25 - 30 HP

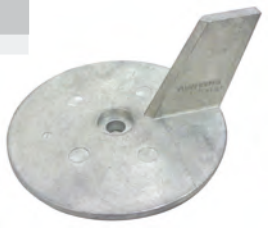

ZN	KG	
CM2504020	0,21	405 - 700
CM2504025	0,31	100 hp
CM2504035	0,10	80 HP IZMIR 15 HP NAXOS



TECNOSEAL
save your dreams

ÁNODO ANODE ANODI ANODE

ZN	KG	OEM
TEN01914	0,07	

80 - 100 HP



ZN	KG	OEM
TEN01915	0,10	



ZN	KG	OEM
TEN01916	0,12	3C8-60217-1



ZN	KG	OEM
TEN01900	0,03	9005655

Serie PIATTA FB



ZN	KG	OEM
TEN01901	0,03	9005660

Serie CURVA FB



ZN	KG	OEM
TEN01906	0,07	2500065

Serie 25 - 40 HP



ZN	KG	OEM
TEN01902	0,10	2500010

Serie 6 8 - 9.9 -15 HP



ZN	KG	OEM
TEN01903	0,20	2500050

Serie BEST 800 - S1000



ZN	KG	OEM
TEN01904	0,10	2504030

Serie 6 HP



ZN	KG	OEM
TEN01905	0,14	9005665



ZN	KG	OEM
TEN01909	0,40	2504015



SELVA

RECAMBIOS MARINOS

ZN	(KG)	OEM
TEN01907	0,14	2504025

Serie 100 HP



ZN	(KG)	OEM
TEN01912	0,10	2504035

Serie IZMIR 8 CV - NAXOS 15 CV



ZN	(KG)	OEM
TEN01908	0,21	2504020

Serie S405 - S700



ZN	(KG)
TEN01913	0,22

Serie MANTA BARRACUDA



IMPULSORES IMPELLERS GIRANTE TURBINES

GUÍA DE IMPULSORES — IMPELLER GUIDE — GUIDA GIRANTE — GUIDE DES TURBINES

	2T STROKES	4T STROKES	REF	CEF	A (mm)	B (mm)	C (mm)
2.5		✓		CEF500376	12,2	48,5	15
3.5, 4	✓			CEF500376	12,2	48,5	15
5/6 OYSTER		✓		CEF500375	12	43	12
7.5 BLACK BASS		✓		CEF500375	12,2	43	12
8 RAY		✓	REC68T-44352-00	CEF500368	11,6	53	14
6, 8/9.9		✓		CEF500387	13,2	48	15
9.9 PIKE		✓	REC63V-44352-01	CEF500363	12,85	53	14
9.9, 15	✓			CEF500387	13,2	48	15
15, 20 WAHOO		✓	REC63V-44352-01	CEF500363	12,85	53	14
25 KINGFISH		✓	REC6H4-44352-02	CEF500385G	16,1	51,2	19,05
25, 30, 35	✓			CEF500386	15,2	53	20,5
40 ARUANA EFI		✓	REC6H4-44352-02	CEF500385G	16,1	51,2	19,05
40, 500 60 DORADO XS-R-EFI		✓	REC6H3-44352-00	CEF500316	18,05	51,8	19
40, 50, 60, 70, 80	✓			CEF500304	18,2	58,62	22,5
80, 100 MARLIN EFI		✓	REC67F-44352-00	CEF500364	20	58,2	34,7
115, 150, 200, 225, 250 EFI		✓	REC6E5-44352-01	CEF500371	22,4	89,3	31

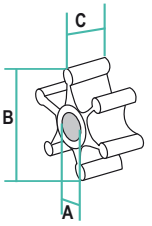



REC6E5-44352-01



REC68T-44352-00



REC63V-44352-01



REC6H4-44352-02



REC6H3-44352-00



REC67F-44352-00

SISTEMA DE PROPULSIÓN
PROPULSION SYSTEM
SISTEMA DI PROPULSIONE
SYSTEME DE PROPULSION

HÉLICES ALUMINIO E INOXIDABLE DE 3 Y 4 PALAS
3 & 4 BLADE ALUMINIUM & SS PROPELLERS
ELICHE ALLUMINIO E INOX DA 3 E 4 PALE
HELICE ALUMINIUM ET INOX 3 ET 4 PALES

CÓDIGO DE REFERENCIAS — PART NO. CODING SYSTEM — SISTEMA DI CODICE — CODAGE DES REFERENCES

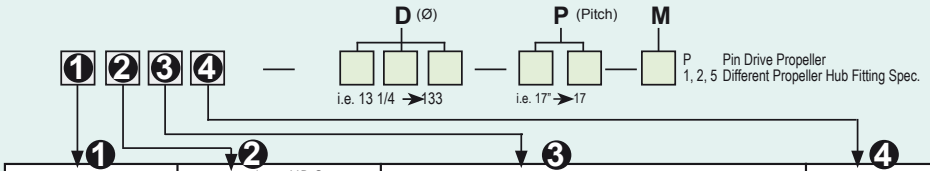

1	2	3	4
1. Mercury, Mariner **2.** Johnson, Evinrude **3.** Yamaha **4.** Suzuki **5.** Tohatsu **6.** **7.** **8.** Volvo Penta **9.** Rubex System	0.5,6,8 and 9.8 HP Group **1.** A Group **2.** B Group **3.** C Group **4.** D Group **5.** E Group **6.** F Group **7.** VP (Std. Hub) **8.** VP (Long Hub)	**1.** AL **2. Saturn** (INOX | Stainless Steel) **3. New Saturn** (INOX | Stainless Steel) **4. Titan** (INOX | Stainless Steel) **5. HR Titan** (INOX | Stainless Steel) **6. Scorpion** (INOX | Stainless Steel) **7. Lexor** (INOX | Stainless Steel)	**1.** 3R Rubber Hub **2.** 3L Rubber Hub **3.** 4R Rubber Hub **4.** 4L Rubber Hub

SOLAS

AMITA 3

SOLAS

Hélice de aluminio con núcleo de goma de gran resistencia.

Aluminum propeller with heavy duty rubber hub.

Eliche di alluminio con mozzi in gomma ad alta resistenza.

Hélice en aluminium avec moyeu en caoutchouc



AMITA 4

SOLAS

Hélices de aluminio con núcleo de goma de gran resistencia. Van muy suaves a poca velocidad y hace el barco muy manejable con la mar picada.

Aluminum propeller with heavy duty rubber hub. Smoother low speed makes the offshore boating activity much easier.

Eliche di alluminio con mozzo in gomma ad alta resistenza. Molto morbido a bassa velocità e rende la barca molto maneggevole con mare cattivo.

Hélice en aluminium avec moyeu en caoutchouc. Permet d'aller doucement à basse vitesse et rende le bateau très maniable lorsque la mer est agitée



NEW SATURN

SOLAS

Hélices de acero inoxidable. Ofrece buena aceleración y rendimiento. Tamaño más pequeño que ofrece un diámetro extragrande.

Stainless steel propeller. Offers good acceleration & all-round performance. Smaller pitch sizes offered in extra large diameter with increased blade area.

Eliche di acciaio inox. Buona accelerazione. Piccole dimensione che offre un più grande diametro.

Hélice inox, offrant de bonnes accélérations et performances. Taille de pas reduite pour les modèles de grands diamètres avec une surface de pale plus importante.



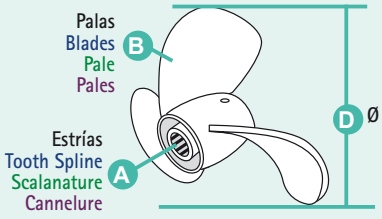

P Paso
Pitch
Passo
Pas

R Rotación L (izquierda) R (derecha)
Rotation L (left) R (Right)
Rotazione L (SX) R (DX)
Rotation L (gauche) R (droit)

GUÍA DE HÉLICES CON NÚCLEO INTEGRADO — PROPELLERS APPLICATION WITH RUBBER HUB — GUIDA ELICHE CON MOZZO — GUIDE DES HELICES ET MOYEUX

	2T STROKES	4T STROKES	R.O. OEM	A	B	D	P	R	AL AMITA 3	AL AMITA 4	INOX STAINLESS STEEL NEW SATURN
RAY 8		✓	6G1-45947-00-EL		3	8 1/2	6 1/2	R	SOL3011-085-07		
			6G1-45943-00-EL				7 1/2		SOL3011-085-08		
			6G1-45941-00-EL				8 1/2		SOL3011-085-09		
SELVA 9.9 / 15 HP	✓		2501300		3	10	7	R	SOL2111-093-07		
						9 1/4	8		SOL2111-093-08		
							9		SOL2111-093-09		
						9	10		SOL2111-093-10		
						9	11		SOL2111-093-11		
DOLPHIN 9.9 (S)		✓	683-45947-00-EL		3	9 1/4	8	R	SOL3111-093-08		
DOLPHIN 9.9 (L)			683-45945-00-EL				9		SOL3111-093-09		
DOLPHIN 15			683-45952-00-EL				9 3/4		SOL3111-093-10		
ANTIBES 20xs	✓		2505500				11		SOL2211-105-11		
ANTIBES 25			2505520			10 1/2	12	R	SOL2211-103-12		
ANTIBES 30											
MAIORCA 35			2505570				12.5		SOL2211-101-13		
MORAY 25		✓	664-45945-00-EL		3	9 7/8	10 1/2	R	SOL3211-099-10		
						9 7/8	11 1/4		SOL3211-099-11		
						9 7/8	12		SOL3211-099-12		
						9 7/8	13		SOL3211-099-13		
						10 1/2	11				SOL3231-105-11
						10 1/4	12				SOL3231-103-12
						10 1/8	13				SOL3231-101-13
MADEIRA 40	✓		2505895		3	12 1/2	14	R	SOL2311-125-14		
MADEIRA 40/50			2506050			12 1/4	15		SOL2311-123-15		
ST. TROPEZ 40											
ST. TROPEZ 40/60			2506060			11 3/4	17		SOL2311-120-17		
MANTA 40	✓		663-45956-01-EL		3	12 1/4	9	R	SOL3311-121-09		
BARRACUDA 50/40			663-45947-02-EL			11 5/8	11		SOL3311-116-11		
DORADO 60/40			663-45952-02-EL			11 3/4	12		SOL3311-114-12		
			663-45945-02-EL			11 1/8	13		SOL3311-111-13		
			663-45958-01-EL			11 1/4	14		SOL3311-111-14		
			663-45943-02-EL			11	15		SOL3311-110-15		
			663-45949-01-EL			10 3/4	16		SOL3311-110-16		
			663-45941-01-EL			11	17		SOL3311-110-17		
						11 7/8	10				SOL3331-119-10
						11 5/8	11				SOL3331-116-11
						11 3/8	12				SOL3331-114-12
						11 1/8	13				SOL3331-111-13
						11 1/8	14				SOL3331-111-14
TENERIFE 70	✓		2505860		3	14	11	R	SOL2411-140-11		
BEST 800			2505860			14	13		SOL2411-138-13	SOL2413-133-13	
PORTOFIN 70			2506020			13 3/4	15		SOL2411-135-15	SOL2413-130-15	SOL2431-135-15
PORTOFINO 75xs			2506020			14	17		SOL2411-133-17	SOL2413-128-17	SOL2431-133-17
PORTOFINO 80			2506020			14	19		SOL2411-130-19	SOL2413-125-19	SOL2431-130-19
SUPERBEST 1000			2505840			14	21		SOL2411-130-21	SOL2413-125-21	SOL2431-130-21
MONTECARLO 90			2506030			13 3/4	15				SOL2431-135-15
MONTECARLO 100			2506030			13 3/8	17				SOL2431-133-17
						13	19				SOL2431-130-19
						12 3/4	21				SOL2431-130-21
MARLIN 100	✓		6E5-45954-00-EL		3	14	11	R	SOL3411-140-11		
NARWHAL 115			6E5-45949-00-EL			13 5/8	13	R	SOL3411-138-13	SOL3413-133-13	
						13 1/8	13	L	SOL3412-138-13		
			6E5-45947-00-EL			13 1/2	15	R	SOL3411-135-15	SOL3413-130-15	
						13 1/2	15	L	SOL3412-135-15		
			6E5-45945-00-EL			13 1/4	17	R	SOL3411-133-17	SOL3413-128-17	
						13 1/4	17	L	SOL3412-133-17		
			6E5-45941-00-EL			13	19	R	SOL3411-130-19	SOL3413-125-19	
			6E5-45943-00-EL			12 5/8	21	R	SOL3411-130-21	SOL3413-125-21	
			688-45978-90-98			13 1/2	15	R			SOL3431-135-15
			688-45930-02-98			13	17	R			SOL3431-133-17
			688-45970-03-98			13	19	R			SOL3431-130-19
			688-45972-02-98			13	21	R			SOL3431-130-21
WHITE SHARK	✓		6G5-45941-00-98		3	15	15	R	SOL3511-150-15	SOL3513-148-15	
150 HPDFI			6G5-45952-00-98			15	15	L	SOL3512-150-15	SOL3514-148-15	
			6G5-45947-01-98			14,8	17	R	SOL3511-148-17	SOL3513-145-17	
			6K1-45947-00-98			14,8	17	L	SOL3512-148-17	SOL3514-145-17	
			6G5-45945-01-98			14,5	19	R	SOL3511-145-19	SOL3513-143-19	
			6K1-45945-01-98			14,5	19	L	SOL3512-145-19	SOL3514-143-19	
			6G5-45949-00-98			14,3	21	R	SOL3511-143-21	SOL3513-140-21	
						14,3	21	L	SOL3512-143-21	SOL3514-140-21	
			6G5-45949-00-98			14,2	23	R	SOL3511-142-23		
						14,2	23	L	SOL3512-142-23		

REF --> RO / OEM

REF	R.O. / OEM	
C		
CEF500304		640
CEF500316		640
CEF500363		640
CEF500364		640
CEF500368		640
CEF500371		640
CEF500375		640
CEF500376		640
CEF500385G		640
CEF500386		640
CEF500387		640
CM15026		636-637
CM2500010	2500010	638
CM2500050	2500050	638
CM2500065	2500065	638
CM2504015	2504015	638
CM2504020		639
CM2504025		639
CM2504035		639
CM41811-98500	41811-98500	638
CM55300-95500	55300-95500	638
CM55320-98400	41811-98400	638
CM55321-94900	55320-94900	638
CM55321-94900A	55320-94900	638
CM61N-45251-01		636
CM62Y-11325-00		636-637
CM63P-11325-01		637
CM63P-11325-11		637
CM67C-45251-00	58.67C4525100	636-638
CM67C-45371-00		636
CM67F-11325-01		637
CM67F-45371-00		637
CM688-45251-01		636
CM68T-11325-00		637
CM68T-45251-00		636
CM6BL-11325-00		636
CM6E0-45251-11A		636-637
CM6E5-45371-01A		637
CM6G5-45251-01A		637
CM6G8-11325-00		636-637
CM6H1-45251-02		637
CM6J9-45371-01		637
CM6K1-45371-02		637
CM82795M	25040151	639
CM9005655	9005655	638
CM9005660	90056660	638
CM9005665	9005665	638
N		
NGKBR6HS-10		636
NGKDPR6EB-9		636
NGKLFR5A-11		637
NGKLFR6A-11		637
NGKLKR7E		637
P		
PAF15-07000031		636-637
PAF20-05000003		636
PAF25-04000021		636
R		
REC35-822626Q15		637
REC5GH-13440-00		637
REC5GH-13440-60		636-637
REC60V-12411-00		637
REC61N-24563-10		636
REC63P-46241-00		637
REC63V-44352-01		636-640
REC67F-12411-01		637
REC67F-44352-00		637-640
REC67F-46241-00		637
REC68T-24251-00		636
REC68T-44352-00		636-640
REC68T-46241-00		636
REC6AH-12411-00		636
REC6C5-46241-00		636-637
REC6D8-WS24A-00		636-637
REC6D9-12411-00		637
REC6E5-44352-01		637-640
REC6H3-44352-00		636-637-640
REC6H4-44352-02		636-640
REC6P3-WS24A-00		637
S		
SOL2111-093-07	2501300	642
SOL2111-093-08		642
SOL2111-093-09		642
SOL2111-093-10		642
SOL2111-093-11		642
SOL2211-101-13	2505570	642
SOL2211-103-12	2505520	642
SOL2211-105-11	2505500	642
SOL2311-120-17	2506060	642
SOL2311-123-15	2506050	642
SOL2311-125-14	2505895	642
SOL2411-130-19	2506020	642
SOL2411-130-21	2505840	642
SOL2411-133-17	2506020	642
SOL2411-135-15	2506020	642
SOL2411-138-13	2505860	642
SOL2411-140-11	2505860	642
SOL2413-125-19	2506020	642

REF	R.O. / OEM	
SOL2413-125-21	2505840	642
SOL2413-128-17	2506020	642
SOL2413-130-15	2506020	642
SOL2413-133-13	2505860	642
SOL2431-130-19	2506020	642
SOL2431-130-21	2505840	642
SOL2431-133-17	2506020	642
SOL2431-133-17	2506030	642
SOL2431-135-15	2506020	642
SOL2431-135-15	2506030	642
SOL3011-085-07	6G1-45947-00-EL	642
SOL3011-085-08	6G1-45943-00-EL	642
SOL3011-085-09	6G1-45941-00-EL	642
SOL3111-093-08	683-45947-00-EL	642
SOL3111-093-09	683-45945-00-EL	642
SOL3111-093-10	683-45952-00-EL	642
SOL3211-099-10	664-45945-00-EL	642
SOL3211-099-11		642
SOL3211-099-12		642
SOL3211-099-13		642
SOL3231-101-13		642
SOL3231-103-12		642
SOL3231-105-11		642
SOL3311-110-15	663-45943-02-EL	642
SOL3311-110-16	663-45949-01-EL	642
SOL3311-110-17	663-45941-01-EL	642
SOL3311-111-13	663-45945-02-EL	642
SOL3311-111-14	663-45958-01-EL	642
SOL3311-114-12	663-45952-02-EL	642
SOL3311-116-11	663-45947-02-EL	642
SOL3311-121-09	663-45956-01-EL	642
SOL3331-111-13		642
SOL3331-111-14		642
SOL3331-114-12		642
SOL3331-116-11		642
SOL3331-119-10		642
SOL3411-130-19	6E5-45941-00-EL	642
SOL3411-130-21	6E5-45943-00-EL	642
SOL3411-133-17	6E5-45945-00-EL	642
SOL3411-135-15	6E5-45947-00-EL	642
SOL3411-138-13	6E5-45949-00-EL	642
SOL3411-140-11	6E5-45954-00-EL	642
SOL3412-133-17		642
SOL3412-135-15		642
SOL3412-138-13		642
SOL3413-125-19	6E5-45941-00-EL	642
SOL3413-125-21	6E5-45943-00-EL	642
SOL3413-128-17	6E5-45945-00-EL	642
SOL3413-130-15	6E5-45947-00-EL	642
SOL3413-133-13	6E5-45949-00-EL	642
SOL3431-130-19	688-45970-03-98	642
SOL3431-130-21	688-45972-02-98	642
SOL3431-133-17	688-45930-02-98	642
SOL3431-135-15	688-45978-90-98	642
SOL3511-142-23	6G5-45949-00-98	642
SOL3511-143-21	6G5-45949-00-98	642
SOL3511-145-19	6G5-45945-01-98	642
SOL3511-148-17	6G5-45947-01-98	642
SOL3511-150-15	6G5-45941-00-98	642
SOL3512-142-23		642
SOL3512-143-21		642
SOL3512-145-19	6K1-45945-01-98	642
SOL3512-148-17	6K1-45947-00-98	642
SOL3512-150-15	6G5-45952-00-98	642
SOL3513-140-21	6G5-45949-00-98	642
SOL3513-143-19	6G5-45945-01-98	642
SOL3513-145-17	6G5-45947-01-98	642
SOL3513-148-15	6G5-45941-00-98	642
SOL3514-140-21		642
SOL3514-143-19	6K1-45945-01-98	642
SOL3514-145-17	6K1-45947-00-98	642
SOL3514-148-15	6G5-45952-00-98	642
T		
TEN01123		636
TEN01154AL		636
TEN01165		637
TEN01900	9005655	639
TEN01901	9005660	639
TEN01902	2500010	639
TEN01903	2500050	639
TEN01904	2504030	639
TEN01905	9005665	639
TEN01906	2500065	639
TEN01907	2504025	640
TEN01908	2504020	640
TEN01909	2504015	639
TEN01912	2504035	640
TEN01913		640
TEN01914		639
TEN01915		639
TEN01916	3C8-60217-1	639
TX6400K		467

RO / OEM --> REF

R.O. / OEM	REF	
2500010	**CM2500010**	638
2500010	**TEN01902**	639
2500050	**CM2500050**	638
2500050	**TEN01903**	639
2500065	**CM2500065**	638
2500065	**CM67C-45251-00**	636-638
2500065	**TEN01906**	639
2501300	**SOL2111-093-07**	642
2504015	**CM2504015**	638
2504015	**TEN01909**	639
2504020	**TEN01908**	640
2504025	**TEN01907**	640
2504030	**TEN01904**	639
2504035	**TEN01912**	640
2505500	**SOL2211-105-11**	642
2505520	**SOL2211-103-12**	642
2505570	**SOL2211-101-13**	642
2505840	**SOL2411-130-21**	642
2505840	**SOL2413-125-21**	642
2505840	**SOL2431-130-21**	642
2505860	**SOL2411-138-13**	642
2505860	**SOL2411-140-11**	642
2505860	**SOL2413-133-13**	642
2505895	**SOL2311-125-14**	642
2506020	**SOL2411-130-19**	642
2506020	**SOL2411-133-17**	642
2506020	**SOL2411-135-15**	642
2506020	**SOL2413-125-19**	642
2506020	**SOL2413-128-17**	642
2506020	**SOL2413-130-15**	642
2506020	**SOL2431-130-19**	642
2506020	**SOL2431-133-17**	642

R.O. / OEM	REF	
2506020	**SOL2431-135-15**	642
2506030	**SOL2431-133-17**	642
2506030	**SOL2431-135-15**	642
2506050	**SOL2311-123-15**	642
2506060	**SOL2311-120-17**	642
9005655	**CM9005655**	638
9005655	**TEN01900**	639
9005660	**TEN01901**	639
9005665	**CM9005665**	638
9005665	**TEN01905**	639
25040151	**CM82795M**	639
90056660	**CM9005660**	638
3C8-60217-1	**TEN01916**	639
41811-98400	**CM55320-98400**	638
41811-98500	**CM41811-98500**	638
55300-95500	**CM55300-95500**	638
55320-94900	**CM55321-94900**	638
55320-94900	**CM55321-94900A**	638
58.67V4525100	**CM67C-45251-00**	638
663-45941-01-EL	**SOL3311-110-17**	642
663-45943-02-EL	**SOL3311-110-15**	642
663-45945-02-EL	**SOL3311-111-13**	642
663-45947-02-EL	**SOL3311-116-11**	642
663-45949-01-EL	**SOL3311-110-16**	642
663-45952-02-EL	**SOL3311-114-12**	642
663-45956-01-EL	**SOL3311-121-09**	642
663-45958-01-EL	**SOL3311-111-14**	642
664-45945-00-EL	**SOL3211-099-10**	642
683-45945-00-EL	**SOL3111-093-09**	642
683-45947-00-EL	**SOL3111-093-08**	642
683-45952-00-EL	**SOL3111-093-10**	642
688-45930-02-98	**SOL3431-133-17**	642

R.O. / OEM	REF	
688-45970-03-98	**SOL3431-130-19**	642
688-45972-02-98	**SOL3431-130-21**	642
688-45978-90-98	**SOL3431-135-15**	642
6E5-45941-00-EL	**SOL3411-130-19**	642
6E5-45941-00-EL	**SOL3413-125-19**	642
6E5-45943-00-EL	**SOL3411-130-21**	642
6E5-45943-00-EL	**SOL3413-125-21**	642
6E5-45945-00-EL	**SOL3411-133-17**	642
6E5-45945-00-EL	**SOL3413-128-17**	642
6E5-45947-00-EL	**SOL3411-135-15**	642
6E5-45947-00-EL	**SOL3413-130-15**	642
6E5-45949-00-EL	**SOL3411-138-13**	642
6E5-45949-00-EL	**SOL3413-133-13**	642
6E5-45954-00-EL	**SOL3411-140-11**	642
6G1-45941-00-EL	**SOL3011-085-09**	642
6G1-45943-00-EL	**SOL3011-085-08**	642
6G1-45947-00-EL	**SOL3011-085-07**	642
6G5-45941-00-98	**SOL3511-150-15**	642
6G5-45941-00-98	**SOL3513-148-15**	642
6G5-45945-01-98	**SOL3511-145-19**	642
6G5-45945-01-98	**SOL3513-143-19**	642
6G5-45947-01-98	**SOL3511-148-17**	642
6G5-45947-01-98	**SOL3513-145-17**	642
6G5-45949-00-98	**SOL3511-142-23**	642
6G5-45949-00-98	**SOL3511-143-21**	642
6G5-45949-00-98	**SOL3513-140-21**	642
6G5-45952-00-98	**SOL3512-150-15**	642
6G5-45952-00-98	**SOL3514-148-15**	642
6K1-45945-01-98	**SOL3512-145-19**	642
6K1-45945-01-98	**SOL3514-143-19**	642
6K1-45947-00-98	**SOL3512-148-17**	642
6K1-45947-00-98	**SOL3514-145-17**	642

POLÍTICA DE GARANTÍAS RECMAR

Todos los productos comercializados por **Recambios Marinos S.L.U.** deben ser instalados y utilizados por personal competente bajo su exclusiva responsabilidad. **Recambios Marinos S.L.U.** no se responsabiliza de las consecuencias producidas por una instalación defectuosa o inapropiada de ningún artículo que no incluya soluciones de instalación.

El instalador será el responsable de verificar la correcta aplicación de las recomendaciones del fabricante en cuanto a compatibilidades de uso.

Los artículos comercializados por **Recambios Marinos S.L.U.** están amparados por la garantía legal de conformidad, conforme a las condiciones expuestas en el real decreto legislativo 1/2007 de 16 de Noviembre, aprobación del texto refundido de la ley general para la defensa de los consumidores y usuarios.

Recambios Marinos S.L.U. distribuye los artículos presentes en sus catálogos unicamente a profesionales, nunca a particulares o cliente final, el importe de la instalación jamás estará incluido en el precio por lo que no será responsable de ésta.

Los artículos comercializados por **Recambios Marinos S.L.U.** disponen de una garantía limitada por defectos de fabricación, los periodos pueden variar entre los 2 años y los 3 meses dependiendo del producto, aplicación y tipo de embarcación (lista 7ª/ 6ª/ 5ª), descartando los artículos considerados como consumibles: bombillas, productos eléctricos, baterías y otros que carecen de periodo alguno, si necesita conocer el plazo exacto del producto contacte con el departamento comercial.

Por daños ocasionados en el transporte, se aplicará lo indicado en el artículo 366 de Código de Comercio, que dice : "Dentro de las veinticuatro horas siguientes al recibo de las mercancías, podrá hacerse reclamación contra la empresa de transporte asignada. Transcurridos los términos expresados o pagados los portes, no se admitirá reclamación alguna contra el transportista sobre el estado en que se entregó la mercancía." El material que enviamos diariamente desde **Recambios Marinos S.L.U.** a nuestros clientes es examinado antes de empaquetarse para su perfecta integridad y evitar daños en el transporte. Recuerde que es muy importante inspeccionar las cargas en presencia del transportista. Cuando se observen daños en la caja, deberá incluirse en el albarán de entrega del transportista una mención del tipo (CONFORME MERCANCÍA, SALVO INSPECCIÓN), y deberá ser firmada por usted y el transportista. En caso de recibir material defectuoso por estas causas debe hacerlo constar tanto al transportista como a **Recambios Marinos S.L.U.** para poder reclamar a la empresa de transporte correspondiente.

SOLICITUD DE GARANTÍA

La garantía siempre estará sujeta a la valoración final del departamento técnico de **Recambios Marinos S.L.U.** Esta valoración se llevará a cabo en nuestras instalaciones o en caso necesario por el fabricante del artículo, en ambas opciones el artículo tiene que estar físicamente en nuestras instalaciones centrales de Viladecans. El tiempo para la resolución sera un máximo de 30 días naturales desde su recepción.

Para enviar el artículo defectuoso, debe ir a la pagina web www.recambiosmarinos.es, ir a su cuenta y seleccionar TRAMITAR GARANTÍA dentro del área privada, desde aquí podrá descargar el archivo para la solicitud de garantías de motores y piezas, y seguir las instrucciones.

Recambios Marinos S.L.U. no asumirá ningún préstamo de reemplazo durante el proceso de garantía.

EXCLUSIONES DE GARANTÍA

Recambios Marinos S.L.U. no podrá ser acusado como responsable del defecto ante:

- Desgaste normal del producto.
- Defectos de instalación o uso inadecuado.
- Instalación de un artículo no destinado a ese modelo.
- Daños por causa externa (accidente, rayo, fluctuación de corriente…)
- Defectos y consecuencias relacionadas con el transporte.
- Alteraciones en instalaciones o barcos destinados a la competición.

En caso de rechazo de la garantía, el cliente tiene la posibilidad de recuperar su artículo defectuoso poniéndose en contacto con nosotros vía e-mail solicitando la devolución del mismo dentro de los 7 días naturales siguientes a la fecha en que se le informó del rechazo de garantía.

Recambios Marinos S.L.U. no forma parte de las garantías comerciales anunciadas en ocasiones por los fabricantes.

GARANTÍA LIMITADA EMBARCACIONES Y PADDLE SURF GOLDENSHIP

Recambios Marinos S.L.U. garantiza toda su gama de embarcaciones neumáticas y paddle surf ante cualquier defecto de fabricación durante un periodo de 24 meses (sólo en Europa) únicamente uso particular. Para uso profesional 6 meses.

La garantía limitada será aplicable a defectos en el tejido y sellado, no se aplicará en los siguientes casos:

- Modificación de piezas y partes.
- Falta de mantenimiento, negligencia, accidentes o instalación incorrecta.
- Desgaste y rasgaduras de uso.

Esta garantía limitada no cubrirá costos incidentales originados por: gastos de remolque, almacenaje, botaduras, alquileres de cualquier tipo, pérdidas de tiempo o ingreso, ni otros daños emergentes.

COMO PROCEDER ANTE UN DEFECTO EN NUESTRA NEUMÁTICA O PADDLE

El primer paso a realizar es la identificación del motivo de la avería. En casos de pérdida de presión es importante localizar el punto o puntos de la pérdida de aire.

El trámite se realizará a través de la página web www.recambiosmarinos.es dentro del Área privada, seleccionando "**expediente garantía neumáticas Goldenship**". Es obligatorio adjuntar imágenes del defecto en cuestión y placa del número de serie, copia del albarán de compra y descripción detallada de la avería para iniciar el trámite.

Revisaremos la información y valoraremos el defecto para determinar la aceptación de garantía, en caso de inicación de trámite les facilitaremos un número de seguimiento o autorización de devolución así como el método de envío. **Recambios Marinos S.L.U.** no aceptará devoluciones de artículos que no hayan sido previamente autorizados.

Nuestras obligaciones quedan limitadas a la reparación o reemplazo de las partes defectuosas resultantes de un defecto de fabricación. Nos reservamos el derecho de modificación de partes fabricadas con anterioridad.

Unicamente el servicio de postventa de Recambios Marinos está autorizado para gestionar las incidencias, no se podrán enviar a reparar artículos sin autorización, en caso de realizarse, el cliente asumirá el 100% los gastos y no podrán ser reclamados.

RECMAR WARRANTY POLICY

All products sold by **Recambios Marinos S.L.U.** must be installed and used by competent personnel under their exclusive responsibility. **Recambios Marinos S.L.U.** shall not be responsible for the consequences of the faulty or improper installation of any item that does not include installation solutions.

The fitter will be responsible for checking that the manufacturer recommendations have been followed correctly in terms of compatible uses.

Articles sold by **Recambios Marinos S.L.U.** are covered by legal warranty of conformity, in accordance with Royal Legislative Decree 1/2007, of 16 November, approving the recast text of the general law on consumer and user protection.

Recambios Marinos S.L.U distribute the products only to professionals and never to privates of final clients. The cost of installing the part would never be included in the price for which reason, **Recambios Marinos S.L.U** would never be responsible for its installation.

Articles sold by **Recambios Marinos S.L.U.** are covered by warranty for manufacturing defects for a limited period of time that may vary between 2 years and 3 months, depending on the product, application and type of boat it is installed on (7th/6th/5th list), except for the articles considered consumable, light bulbs, electrical products, batteries and others that are not covered at all. For information on the exact warranty period of an article, please contact the Sales Department.

In the case of damage caused during shipping, article 366 of the Code of Commerce will apply. The article says: "Claims to the delivery company may be made within 24 hours from receiving the goods. Once this term has elapsed, or the freight costs have been paid, claims to the delivery company with regard to the condition of the goods can no longer be made." The goods that **Recambios Marinos S.L.U.** sends every day to its customers are examined before being packed to ensure their perfect integrity and avoid damage during shipping. Remember that it is essential to check the goods in the presence of the dispatcher. If the package is damaged, the dispatcher's delivery note must mention what type (CONFORMING GOODS, UNLESS INSPECTED), and must be signed by you and by the dispatcher. If you receive damaged goods for these reasons you must notify both the dispatcher and **Recambios Marinos S.L.U.** to be able to make the claim to the relevant delivery company.

WARRANTY CLAIMS

Warranties are always subject to **Recambios Marinos S.L.U.** Technical Department's assessment. The assessment will be carried out on **Recambios Marinos S.L.U.**'s premises or, if necessary, by the article's manufacturer. In both cases, the article must be physically on **Recambios Marinos S.L.U.**'s premises in Viladecans. Assessment time will not exceed 30 calendar days from receiving the article.

To return the faulty item, visit www.recambiosmarinos.es, go to your account and select PROCESS WARRANTY in the private section. From there you will be able to download the file to claim the warranty of engines and parts and follow the instructions.

Recambios Marinos S.L.U. will not charge for the loan of the replacement during the warranty process.

WARRANTY EXCLUSIONS

Recambios Marinos S.L.U. shall not be responsible for product faults in the following cases:

- Normal wear and tear of a product. Installation faults or improper use.
- Installation of an article not designed for the model in question.
- Damage due to external causes (accidents, lightening, power surges...)
- Defects and consequences of transport.
- Alterations to installations or to boats intended for competitions.

If the warranty is refused, the customer may retrieve the faulty article by contacting **Recambios Marinos S.L.U.** via email and requesting that the article is returned to them within 7 calendar days from the day the warranty was refused.

Recambios Marinos S.L.U. does not apply the warranties offered from time to time by manufacturers.

GOLDENSHIP BOATS AND PADDLE SURF LIMITED WARRANTY

Recambios Marinos S.L.U. guarantees its full range of inflatable/rib boats and paddle surf of any manufacturing defect for a period of 24 months (only in Europe) for private use only. Commercial use 6 months.

The limited warranty will be applicable to defects in the fabric and sealing, but will not apply in the following situations:

- Modification of parts and components.
- Lack of maintenance, negligence, accidents or improper installation.
- Wear and tear of use.

This limited warranty will not cover incidental costs arising from: towing expenses, storage, launching, rents of any kind, loss of time or income, or other damages emerging.

HOW TO PROCEED IF YOU FIND A DEFECT IN ONE OF OUR BOATS / PADDLE SURF

Identify the reason for the breakdown, in cases of pressure loss. It is important to locate the point or points of air loss.

The claim must be done through the private área of the the Recambios Marinos website, www.recambiosmarinos.es by selecting the file **"Goldenship boats warranty"**.

It is mandatory to attach images when you send the claim to **Recambios Marinos S.L.U.** by e-mail, and a detailed explanation of the problem as well as copy of the plate with the model and serial number and copy of the purchase invoice.

Our obligations are limited to the repair or replacement of defective parts resulting from a manufacturing defect. We reserve the right to modify parts previously manufactured.

Only the **Recambios Marinos S.L.U.** service department is authorized to handle the warranty claims and authorize any repair. Items cannot be sent to repair without authorization of **Recambios Marinos S.L.U.**, Otherwise the client would have to assume 100% of the expenses and would be automatically out of warranty.

POLITICA DI GARANZIE RECMAR

Tutti i prodotti commercializzati da **Recmar S.R.L.** devono essere installati e utilizzati da personale competente sotto la sua esclusiva responsabilità. **Recmar S.R.L.** non è responsabile per le conseguenze di un'installazione difettosa o inadeguata di qualsiasi articolo che non includa soluzioni di installazione.

L'installatore è responsabile della verifica della corretta applicazione delle raccomandazioni del fabbricante in materia di compatibilità d'uso.

Gli articoli commercializzati dalla **Recmar S.R.L..** sono coperti dalla garanzia legale di conformità, conforme alle condizioni enunciate nel regio decreto legislativo 1/2007 del 16 novembre, approvazione del testo consolidato della legge generale per la difesa dei consumatori e degli utenti.

Recmar S.R.L. distribuisce gli articoli presenti nei suoi cataloghi solo a professionisti, mai a privati o cliente finale, l'importo dell'impianto non sarà mai incluso nel prezzo e quindi non sarà responsabile di quest'ultimo.

Gli articoli commercializzati dalla **Recmar S.R.L.** dispongono di una garanzia limitata per difetti di fabbricazione, i periodi possono variare da 2 anni a 3 mesi a seconda del prodotto applicazione e tipo di imbarcazione (elenco 7ª/ 6ª/ 5ª), scartando gli articoli considerati come consumabili lampadine, prodotti elettrici, batterie e altri che non hanno alcun periodo di tempo, se avete bisogno di conoscere il tempo esatto del prodotto contattare il reparto commerciale.

Per i danni causati al trasporto si applica l'articolo 366 del codice di commercio che recita: "Entro 24 ore dal ricevimento delle merci, può essere presentato un reclamo nei confronti della società di trasporto designata. Alla scadenza dei termini espressi o pagati, non sono ricevibili reclami contro il trasportatore in merito allo stato in cui la merce è stata consegnata." Il materiale che inviamo quotidianamente da **Recmar S.R.L.** ai nostri clienti viene esaminato prima di essere confezionato per la sua perfetta integrità ed evitare danni al trasporto. Si ricorda che è molto importante ispezionare i colli alla presenza del vettore. In caso di danneggiamento della cassa, sul bollettino di consegna del trasportatore deve figurare un'indicazione del tipo (CONFORME MERCE, SALVO ISPEZIONE) e deve essere firmato dall'utente e dal trasportatore, in caso di ricezione di materiale difettoso per questi motivi deve essere messo a verbale sia al trasportatore che alla **Recmar S.R.L.** per poter reclamare all'impresa di trasporto interessata.

RICHIESTA DI GARANZIA

La garanzia sarà sempre soggetta alla valutazione finale del Dipartimento Tecnico della **Recmar S.R.L.** Questa valutazione sarà effettuata presso la nostra sede o, se necessario, dal fabbricante dell'articolo, in entrambe le opzioni l'articolo deve essere fisicamente nella nostra sede centrale di Viladecans, il tempo per la risoluzione è un massimo di 30 giorni di calendario dalla ricezione.

Per inviare l'articolo difettoso, è necessario andare al sito www.recmar.it, andare al tuo account e selezionare la GARANZIA all'interno del settore privato, da qui è possibile scaricare il file per la richiesta di garanzie di motori e parti e seguire le istruzioni.

Recmar S.R.L. non assumerà alcun prestito di sostituzione durante il processo di garanzia.

ESCLUSIONI DI GARANTÍA

Recmar S.R.L. non può essere accusato come responsabile del difetto di fronte a:

- Normale usura di un prodotto.
- Difetti di installazione o uso improprio.
- Installazione di un articolo non destinato a quel modello.
- Danni dovuti a cause esterne (incidente, fulmine , fluttuazione di corrente…)
- Difetti e conseguenze connesse al trasporto.
- Modifiche in impianti o barche destinati alla competizione.

In caso di rifiuto della garanzia, il cliente ha la possibilità di recuperare il suo articolo difettoso contattandoci via e-richiesta di rimborso entro 7 giorni di calendario dalla data in cui viene informato del rifiuto della garanzia.

Recmar S.R.L. non fa parte delle garanzie commerciali annunciate a volte dai produttori.

GARANZIA LIMITATA BARCHE E PADDLE SURF GOLDENSHIP

Recmar S.R.L. garantisce l'intera gamma di imbarcazioni pneumatiche e paddle surf contro qualsiasi difetto di fabbricazione per un periodo di 24 mesi (solo in Europa) esclusivamente per uso privato. Per uso professionale 6 mesi.

La garanzia limitata si applica ai difetti di tessuto e di tenuta, non si applica nei seguenti casi:

- Modifica di parti e pezzi.
- Mancanza di manutenzione, negligenza, incidenti o installazione errata.
- Usura e strappi di utilizzo

Questa garanzia limitata non copre i costi incidentali derivanti da: costi di rimorchio, deposito, varo, noleggio di qualsiasi tipo, perdite di tempo o entrate, o altri danni emergenti.

COME PROCEDERE A UN DIFETTO NELLA NOSTRA PNEUMATICA/ PADDLE

Il primo passo da fare è identificare il motivo dell'avaria, in caso di perdita di pressione è importante individuare il punto o i punti della perdita d'aria.

Il tramite sarà effettuato attraverso il sito Web di Recambios Marinos www.recmar.it all'interno dell'area privata, selezionando il "**dossier garanzia pneumatiche Goldenship**". È obbligatorio allegare immagini del difetto in questione e targhetta del numero di serie, copia della bolla di acquisto e descrizione dettagliata del guasto per avviare la procedura, se necessario.

Recmar S.R.L. non accetterà restituzioni di articoli che non sono stati precedentemente autorizzati.

I nostri obblighi sono limitati alla riparazione o sostituzione delle parti difettose derivanti da un difetto di fabbricazione. Ci riserviamo il diritto di modificare parti prodotte in precedenza.

Solo il servizio di post-vendita della **Recmar S.R.L.** è autorizzato a gestire gli eventi, non possono essere inviati a riparare articoli senza autorizzazione, in caso di realizzazione il cliente assumerà il 100% delle spese e non potranno essere reclamati.

POLITIQUE DE GARANTIE RECMAR

Tous les produits vendus par **Recambios Marinos S.L.U.** doivent être installés et utilisés par du personnel compétent sous sa seule responsabilité.

Recambios Marinos S.L.U. n'est pas responsable des conséquences d'une installation défectueuse ou inappropriée de tout élément n'incluant pas les solutions d'installation.

L'installateur sera responsable de la vérification de l'application correcte des recommandations du fabricant concernant la compatibilité d'utilisation.

Les articles vendus par **Recambios Marinos S.L.U.** bénéficient de la garantie légale de conformité, conformément aux conditions énoncées dans le décret législatif royal 1/2007 du 16 novembre, portant approbation du texte consolidé de la loi générale de la défense des consommateurs et des utilisateurs.

Les articles vendus par **Recambios Marinos S.L.U.** ont une garantie limitée pour les défauts de fabrication, les périodes peuvent varier de 2 ans à 3 mois en fonction de l'application du produit et du type de navire où ils ont été installés (7ème / 6ème / 5ème liste), excluant les articles considérés comme des consommables, ampoules, produits électriques, batteries et autres.

Si vous ne connaissez pas la durée de garantie exacte du produit, contactez le service commercial.

Pour les dommages causés au cours du transport, les dispositions de l'article 366 du code de commerce seront appliquées, ce qui stipule:

Vingt-quatre heures maximum après la réception de la marchandise, une réclamation doit être adressée à la société de transport.

Après que les conditions aient été exprimées ou que le fret eu été payé, aucune réclamation ne sera acceptée contre le transporteur auprès de l'État.

Lorsque la marchandise a été livrée. Le matériel que nous envoyons quotidiennement de **Recambios Marinos S.L.U.** à nos clients est examiné avant l'emballage pour une intégrité parfaite et éviter les dommages de transport. N'oubliez pas qu'il est très important d'inspecter le chargement en présence du transporteur.

Lorsque des dommages sont constatés sur le colis, ils doivent figurer sur le bon de livraison du transporteur.

Une mention du type (EN FONCTION DE LA MARCHANDISE, SAUF INSPECTION), et doit être signé par vous et le transporteur, s'il est reçu défectueux le matériel doit être enregistré pour ces raisons à la fois par le transporteur et par **Recambios Marinos S.L.U.** pour qu'une réclamation soit faite la compagnie de transport correspondante.

DEMANDE DE GARANTIE

La garantie sera toujours soumise à l'évaluation finale du service technique de **Recambios Marinos S.L.U.** Cette évaluation sera effectuée dans nos installations ou, si nécessaire, par le fabricant de l'article, dans les deux cas, l'article doit être physiquement dans nos locaux de Viladecans, le délai de résolution sera de 30 jours maximum à partir de sa réception.

Pour envoyer l'article défectueux, vous devez vous rendre sur le site www.recambiosmarinos.es, accéder à votre compte et sélectionner

PIECES DE RETOUR.

Dans l'espace privé, vous pouvez télécharger le fichier pour demander des garanties de moteurs et de pièces et suivre les instructions.

Si tel est votre souhait, **Recambios Marinos S.L.U.** n'assumera aucun prêt de remplacement pendant le processus de garantie.

EXCLUSIONS DE GARANTIE

Recambios Marinos S.L.U. ne sera pas responsable des défauts suivants:

- Usure normale d'un produit.
- Défauts d'installation ou d'utilisation inadéquate.
- Installation d'un article non destiné à ce modèle.
- Dommages dus à une cause externe (accident, foudre, fluctuation de courant…)
- Défauts et conséquences liés au transport.
- Modifications d'installations ou de bateaux destinés à la compétition.

En cas de refus de la garantie, le client a la possibilité de récupérer son article défectueux en nous contactant par courrier électronique pour demander le retour à ses frais de celui-ci dans les 7 jours calendaires suivant la date à laquelle vous avez été informé du rejet de la garantie.

Recambios Marinos S.L.U. ne participe pas à des garanties commerciales parfois annoncées par les fabricants.

LIMITE DE GARANTIE EMBARCATIONS ET PADDLE GOLDENSHIP

Recambios Marinos S.L.U. garantie sa gamme complète de bateaux gonflables et de paddle surf contre tout défaut de fabrication pendant une durée de 24 mois (uniquement en Europe) exclusivement pour usage particulière. Pour usage professionnel 6 moins.

La limite de garantie sera applicable aux défauts du tissu et de l'étanchéité, et elle ne s'appliquera pas dans les cas suivants :

- Modification de pièces ou partie.
- Manque d'entretien, négligence, accidents ou mauvaise installation.
- Usure d'usage.

Cette garantie limitée ne couvrira pas les frais accessoires résultant : Frais de stockage, remplacement, loyer de toute nature perte de temps ou de revenu, ou d'autre dommage émergent.

COMMENT PROCEDER AVEC UN DEFAUT SUR NOS PNEUMATIQUES ET PADDLE

La première étape consiste à identifier le motif de la panne. En cas de perte de pression, il est important de localiser le ou les points par lesquels l'air s'échappe.

La procédure se fera via notre site internet www.recambiosmarinos.es, dans votre espace privé en sélectionnant le dossier "**garantie pneumatique Goldenship**". Il est obligatoire de joindre des photos du défaut en question et de la plaque du numéro de série. Il faut joindre également la copie du bon de livraison ou de la facture d'achat et faire une description détaillée de la panne pour démarrer le processus si nécessaire.

Recambios Marinos S.L.U. n'acceptera pas les retours des articles qui n'ont pas été préalablement autorisés. Notre obligation se limite à la réparation ou le remplacement des pièces défectueuses résultant d'un défaut de fabrication. Nous nous réservons le droit de modifier les pièces fabriquées précédemment.

Seul le service après-vente de **Recambios Marinos S.L.U.** est autorisé à gérer les incidents. Les articles ne peuvent pas être envoyé en réparation sans autorisation. Dans le cas contraire, le client assumera 100% des dépenses et ne pourra rien réclamer.

BARCELONA

Jocelyn Bell, 26
Pol. Ca n'Alemany
08840 Viladecans (Barcelona)
Tel. 902 10 85 85 - 93 633 34 80
Fax 93 662 66 59

International
phone: (+34) 93 662 66 55
Fax (+34) 93 662 66 59

info@recambiosmarinos.es
www.recambiosmarinos.es

GIRONA

C/ Gironés, 5
Pol. Ind. El Plà
17486 Castelló d'Empúries (Girona)
Tel. (+34) 972 158 809

girona@recmar.es

CANARIAS

Laura Grote de la Puerta, 3, Nave 5
Pol. Industrial El Mayorazgo
38110 Santa Cruz de Tenerife
Tel. (+34) 922 621 499

canarias@recmar.es

ITALIA

RECMAR SRL
Via Israele 10 H
Zona Industriale Settore 7
07026 Olbia (OT)

Tel. (+39) 0789 51962
Fax (+39) 0789 600177
sales@recmar.it