RECAMBIOS MARINOS

MERCRUISER VOLVO OMC YANMAR

INTRA-FUERABORDA • OUT-INBOARD
ENTRO-FUORIBORDO • IN-BORD HORS-BORD

2023
2024

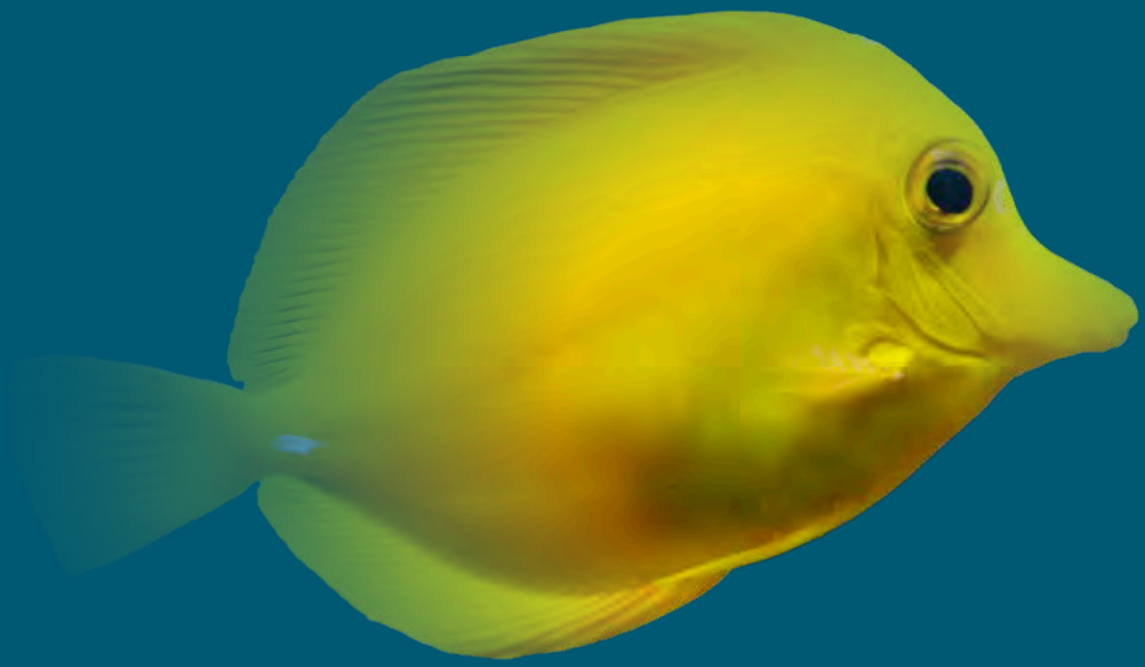

www.recambiosmarinos.es

RECAMBIOS MARINOS

MERCRUISER VOLVO OMC YANMAR

INTRA-FUERABORDA • OUT-INBOARD
ENTRO-FUORIBORDO • IN-BORD HORS-BORD

2023
2024



www.recambiosmarinos.es

IMPORTANTE

LOS PRODUCTOS QUE APARECEN EN NUESTROS CATALOGOS SON VÁLIDOS Y COMPATIBLES CON LOS MOTORES Y TRANSMISIONES DE LAS MARCAS ORIGINALES QUE APARECEN EN CADA SECCIÓN. EN ALGUNOS CASOS TAMBIÉN SUMINISTRAMOS RECAMBIOS ORIGINALES. ESTA INFORMACIÓN APARECE CON LA REFERENCIA EN EL MOMENTO DE CONFIRMAR EL PEDIDO POR NUESTRA WEB. LA IMÁGENES AQUÍ CONTENIDAS PUEDEN NO CORRESPONDER CON TOTAL PRECISIÓN AL PRODUCTO SUMINISTRADO. RECAMBIOS MARINOS, S.L.U. SE RESERVA EL DERECHO DE ANULAR O CAMBIAR PRODUCTOS SIN PREVIO AVISO.

IMPORTANT

THE PRODUCTS THAT APPEAR IN OUR CATALOGS ARE VALID AND COMPATIBLE WITH THE MOTORS AND TRANSMISSIONS OF THE ORIGINAL BRANDS THAT APPEAR IN EACH SECTION. IN SOME CASES WE ALSO SUPPLIED ORIGINAL SPARE PARTS. THIS INFORMATION APPEARS WITH THE REFERENCE AT THE TIME OF CONFIRMING THE ORDER BY OUR WEB. IMAGES CONTAINED HERE MAY NOT CORRESPOND WITH TOTAL ACCURACY TO THE PRODUCT SUPPLIED. RECAMBIOS MARINOS, S.L.U. RESERVES THE RIGHT TO CANCEL OR CHANGE PRODUCTS WITHOUT PRIOR NOTICE.

IMPORTANTE

I PRODOTTI CHE COMPAIONO NEI NOSTRI CATALOGHI SONO VALIDI E COMPATIBILI CON I MOTORI E LE TRASMISSIONI DEI MARCHI ORIGINALI CHE APPAIONO IN OGNI SEZIONE. IN ALCUNI CASI ABBIAMO FORNITO ANCHE RICAMBI ORIGINALI. QUESTA INFORMAZIONE RISULTA CON IL RIFERIMENTO AL MOMENTO DELLA CONFERMA DELL'ORDINE DA PARTE DEL NOSTRO WEB. LE IMMAGINI QUI CONTENUTE POTREBBERO NON CORRISPONDERE ESATTAMENTE AL PRODOTTO FORNITO. RECAMBIOS MARINOS, S.L.U., SI RISERVA IL DIRITTO DI CANCELLARE O MODIFICARE I PRODOTTI SENZA PREAVVISO.

IMPORTANT

LES PRODUITS QUI FIGURENT DANS NOS CATALOGUES SONT VALIDES ET COMPATIBLES AVEC LES MOTEURS ET LES TRANSMISSIONS DES MARQUES ORIGINALES QUI SONT PRESENTES DANS CHAQUE SECTION. DANS CERTAINS CAS NOUS FOURNISSONS EGALEMENT DES PIECES DE RECHANGE ORIGINALES. CETTE INFORMATION EST MENTIONNEE AVEC LA REFERENCE SUR NOTRE SITE WEB. LES IMAGES CONTENUES DANS CE DOCUMENT PEUVENT NE PAS CORRESPONDRE AVEC UNE PRECISION TOTALE AU PRODUIT FOURNI. RECAMBIOS MARINOS SLU SE RESERVE LE DROIT D'ANNULER OU DE MODIFIER DES PRODUITS SANS PREAVIS.

• MERCRUISER CUMMINS 96
REF --> OEM 319
OEM --> REF 330

• VOLVO 340
REF --> OEM 593
OEM --> REF 605

• OMC 616
REF --> OEM 700
OEM --> REF 704

• YANMAR 708
REF --> OEM 776
OEM --> REF 779

• OTRAS MARCAS | OTHER BRANDS
ALTRE MARCHE | AUTRES MARQUES 782
REF --> OEM 861
OEM --> REF 866

Política de garantía y devolución
Warranty and return policy
Politica di garanzie e regole per i rest merce
Politique de garantie et retour de pièces 869

ÍNDICE accesorios	Accessories TABLE OF CONTENTS	INDICE accessori	INDEX accessoires	
SOPORTES	STANDS	SUPPORTI	SUPPORTS	7
PINTURAS	PAINTS	PITTURE	PEINTURES	11
ANTIFOULING	ANTIFOULING	ANTIFOULING	ANTIFOULING	12
MANTENIMIENTO DEL MOTOR	ENGINE MAINTENANCE	MANUTENZIONE MOTORE	MAINTENACE MOTEUR	13
BARNACLE BUSTER®	BARNACLE BUSTER®	BARNACLE BUSTER®	BARNACLE BUSTER®	16
PERMATEX®	PERMATEX®	PERMATEX®	PRODUITS PERMATEX	17
LUBRICANTES	LUBRICANT	LUBRIFICANTE	HUILE POUR MOTEUR	20
ACCESORIOS Y HERRAMIENTAS DE INSTALACIÓN	ACCESSORIES AND INSTALATION TOOLS	ACCESSORI E ATTREZZI INSTALLAZIONE	ACCESSOIRES ET OUTILS D'INSTALLATION	32
TX MARINE©	TX MARINE©	TX MARINE©	TX MARINE	42
RACORES Y TORNILLERÍA	RACORS & FITTINGS	RACCORDI E VITERIA	RACCORS ET VISERIE	45
SENSORES Y ALARMAS	SENDERS & ALARMS	SENSORE E ALLARMI	SONDES ET ALARMES	46
MANGUERAS	HOSES	TUBO	TUYAUX	46
MANGUERAS Y CODOS DE SILICONA	ENGINE AND ELBOW IN SILICONE	TUBI E GOMITI IN SILICONE	DURITES ET COUDE EN SILICONE	47
LLAVE DE ARRANQUE	IGNITION STARTER SWITCHES	CHIAVE DI AVVIAMENTO	CONTACTEUR À CLÉ	48
IDENTIFICACIÓN DE MOTOR	ENGINES'S IDENTIFICATION	IDENTIFICAZIONE MOTORE	IDENTIFICATION DES MOTEUR	50
MOTORES Y CULATAS GM NUEVOS	MOTORS & CYLINDER GM. NEW	MOTORI ET TESTATE GM NOUVI	MOTEURS ET CULASSES GM NEUFS	52
MOTORES Y CULATAS REMANUFACTURADOS GM & FORD	MOTORS & CYLINDER GM & FORD. REMANUFCTURED	BLOCCHI ET TESTATE GM & FORD RIGENERATI	BLOCS ET CULASSES GM & FORD RECONDITIONNE	59
DESPIECE GM	GM PARTS	PARTE GM	PARTIES GM	64
DESPIECE FORD	FORD PARTS	PARTE FORD	PARTIES FORD	89
índex ref	Ref. table	Indice Ref.	Index Réf.	91

ICONOS	ICONS	ICONE	ICONES
Medida	Measures	Dimensione	Dimension
Ancho	Width	Larghezza	Largeur
Alto	High	Alto	Hauteur
Largo Fondo	Length Depth	Lungo Sfondo	Longueur Profondeur
Unidades x bolsa	Units x bag	Unità x borsa	Unité x sachet
Unidades x skinpack	Units x skinpack	Unità x skinpack	Unité x blister
Caja	Box	Scatola	Carton
Peso	Weigth	Peso	Poids
Trabajo seguro	Safe work	Lavoro sicuro	Travailler en sécurité
Tubo Manguera	Tube	Tubo	Tuyau Durite
Distancia entre tornillos	Screw space	Distanza tra le viti	Entraxe
Tornillo	Screw	Vite	Vis
Rosca	Thread	Filo	Filetage
Rosca Macho	Male Thread	Filetto maschio	Filetage mâle
Rosca Hembra	Female theread	Filetto femmina	Filetage femelle
Electricidad	Power	Elettricità	Electricité
Eslora	Boat length	Lunghezza imbarcacione	Longueur embarcation
Mando	Control	Comando	Boitier
Carga máxima	Max. Load	Caricca massima	Charge maximale
Flujo Velocidad	Flow Speed	Flow	Vitesse du débit
Presión	Pressure	Presione	Pression
Presión máx.	Max. pressure	Presione mass.	Pression max.
Radio	Radius	Raggio	Rayon
Entrada	IN	Ingresso	Entrée
Salida	OUT	Uscita	Sortie
Capacidad	Capacity	Capacità	Capacité
Temperatura	Temperature	Temperatura	Température
Hélice	Propeller	Elica	Hélice
Cono eje	Hub	Asse conico	Asse conique
Motor	Motor	Motore	Moteur

Ánodo	Anode	Anodo	Anode
Filtro	Filter	Filtro	Filtre
Elemento filtro	Filter Element	Elemento filtro	Cartouche de filtre
Llave	Key	Chiave	Clé
Posiciones llave	Key positions	Chiave, posizione	Clé, positions
Material	Material	Materiale	Matériel
Pins	Pins	Pin	Pines
Cables Terminales	Terminals	Terminali	Bornes
Junta	Gasket	Guarnizione	Joint
Piston	Piston	Pistone	Piston
Aros de piston	Piston ring	Fasce pistone	Segments de piston
Cojinete	Bearing	Cuscinetto	Roulement
Impulsor	Impeller	Girante	Turbine
Tuerca	Nut	Dado	Écrou
Dientes	Tooth	Denti	Dents
Estrías	Spline	Scanalatura	Dents
Polea	Pulley	Pulleggia	Poulie
Solenide Relé	Solenoid Relay	Relé	Relais
Conector latiguillo	Trim connectors	Connettori trim	Connecteurs flexible de trim
Fuelle	Bellow	Cuffia	Soufflet
Abrazadera	Clamp	Fascetta	Collier
Cuerpos carburador	Carburetors BBL	Corpi carburatore	Cors carburateur
Volante	Flywheel	Volante	Volant
Flotador	Float	Galleggiante	Floteur
Kit aguja carburador	Inlet needle kit	Kit spillo	Kit pointeau
Cable	Wire	Cavi	Faisceau
Centrador bomba aspiración agua	Water pump cross pieces	Centratori pompa aspirazione	Toc d'entrainement de pompe à eau
Consola bomba agua	Pump console	Tirante per pompe	Support de pompe à eau
Tope bomba agua	Pump stop	Aletta arresto pompe	Butée de pompe à eau
PROHIBIDO. No recomendado.	PROHIBITED. Not recommended.	VIETATO. Non è raccomandato.	INTERDIT. Déconseillé.

MEGASOPORTE PARA EMBARCACIONES

Diseñado para adaptarse a la mayoría de configuraciones de casco.
Ajuste rápido ancho – alto con sistema de bulón.
Las almohadillas especialmente diseñadas limitan el movimiento de cabeceo (lado a lado) facilitando su posición durante la colocación del barco.
Se puede ajustar a alturas independientemente para exhibir el barco inclinado.
Acabado resistente con pintura negra.
Ruedas de poliuretano para casi todo tipo de superficies planas, incluidas baldosas y mármol.

MEGASUPPORT FOR BOATS

Designed to fit most helmet configurations.
Quick width-to-height adjustment with bolt system.
Specially designed pads limit pitching movement (side to side) making it easier to position the boat during positioning.
Can be adjusted to independent heights to display the boat at an incline.
Durable black painted finish.
Polyurethane wheels for almost any flat surface, including tile and marble.

MEGASUPPORTO PER LE IMBARCAZIONE

Progettato per adattarsi alla maggior parte delle configurazioni di casco.
Regolazione rapida da larghezza ad altezza con sistema a bulloni.
I cuscinetti appositamente progettati limitano il movimento di beccheggio (da un lato all'altro) facilitando il posizionamento dell'imbarcazione.
Può essere regolato ad altezze indipendenti per visualizzare l'imbarcazione in pendenza.
Finitura resistente verniciata in nero.
Ruote in poliuretano per quasi tutte le superfici piane, comprese piastrelle e marmo.

MÉGASUPPORT POUR LES BATEAUX

new

Conçu pour s'adapter à la plupart des configurations de casques.
Réglage rapide de la largeur à la hauteur grâce au système de boulons.
Des patins spécialement conçus limitent le mouvement de tangage (d'un côté à l'autre), ce qui facilite le positionnement du bateau lors de la mise en place.
Peut être réglé à des hauteurs indépendantes pour afficher le bateau en inclinaison.
Finition durable en peinture noire.
Roues en polyuréthane pour presque toutes les surfaces planes, y compris le carrelage et le marbre.







recmar

REF			KG
RECMJ10PS	165,1 --> 246,4 cm	60,9 --> 82,5 cm	4,5 T

SOPORTES PARA EMBARCACIONES — BOAT STANDS — SUPPORTI PER IMBARCAZIONI — BERS ROULANT POUR BATEAU

recmar

REF	KG
RECED36	1.500 kg

REF
RECED36C





SOPORTES DESCARGA DE EMBARCACIONES

RECH10
Para cargar o descargar embarcaiones de los remolques o cuna.
Los remolques pueden entrar y salir de entre los gatos hidráulicos libremente, facilitando su tarea.
Levantan embarcaciones de hasta 18 toneladas.
Su recorrido de elevación es de 51 cm.
Equipado con válvula de bloqueo que permite mantener el barco indefinidamente en la posición deseada.
Puede actuar sobre tierra, grava, asfalto o cemento, tanto en la tienda, como en el varadero o exposición.

BOAT HANDLING JACKS & STANDS

RECH10
Work station for bottom repair & cleaning. Trailer rolls in out past jacks, allowing you to take boats on or off trailers easily.
Jacks have an auto lock allowing boats to be left on indefinitely.
Can be used on dirt, gravel, black top or cement.
Can be used anywhere! Shop, yard, showroom.
Lifts boats up to 40,000 lbs.

SUPPORTI SCARICO IMBARCAZIONI

RECH10
Per caricare o scaricare imbarcazioni da rimorchi o sostegni.
I rimorchi possono entrare e uscire tra i crik idraulici liberamente, facilitando il compito.
Solleva imbarcazioni fino a 18 tonnellate.
Escursione max di 51 cm.
Fornito di valvola di blocco che permette di mantenere la barca nella posizione desiderata per diversi tempi.
Può essere usato su terra, ghiaia, asfalto o cemento, come in negozio o in esposizione.

SUPPORTS DE DÉCHARGE DE BATEAU

RECH10
Pour charger ou décharger des bateaux de remorques ou de berceaux.
Les remorques peuvent entrer et sortir librement entre les vérins hydrauliques, ce qui facilite leur tâche.
Ils lèvent des navires jusqu'à 18 tonnes.
Sa course d'élévation est de 51 cm.
Équipé d'une valve de blocage qui permet au navire d'être maintenu indéfiniment dans la position souhaitée.
Il peut agir sur terre, gravier, asphalte ou ciment, aussi bien en magasin qu'en hangar à bateaux ou en exposition.

REF		INCLUYE	INCLUDED	INCLOSO	COMPREND	
RECH10		Soportes hidráulicos	Jacks	Supporti idraulici	Supports hydrauliques	x 4
	REC12	Soportes	Straight arms	Supporti	Supports	x 4
	REC15	Soportes inclinados 25 cm	10" drop arms	Supporti inclinati 25 cm	Supports inclinés de 25 cm	x 4
	REC20	Soportes asiento barco	4" x 18" contact pads	Supporti appoggi barche	Supports de siège de bateau	x 4
RECH10-1/4		Soporte hidráulico	Jack	Supporto idraulico	Support hydraulique	1
	REC12	Soporte	Straight arm	Supporto	Support	1
	REC15	Soporte inclinados 25 cm	10" drop arms	Supporto inclinato 25 cm	Support incliné de 25 cm	1
	REC20	Soporte asiento barco	4" x 18" contact pad	Supporto appoggo barche	Support de siège de bateau	1





REF					KG	
REC12	Soporte plano std.	Straigh support standard	Braccia piatto standard	Support plat standard		83,8 - 132 cm
	1ª posición	1st pin hole	1ª posizione	1ère position	900 kg	
	2ª posición	2nd pin hole	2ª posizione	2ème position	1.800 kg	
	3ª posición	3rd pin hole	3ª posizione	3ème position	3.000 kg	
	4ª posición	4th pin hole	4ª posizione	4ème position	3.600 kg	
REC15	Soporte inclinado	Drop arm	Braccia	Support incliné		28 cm =10"
REC16	Soporte inclinado	Drop arm	Braccia	Support incliné		51 cm = 20"
REC17	Suplemento	Single riser extension	Suplementi	Supplement		12,5 cm = 5"
REC18	Suplemento	Single riser extension	Suplementi	Supplement		25 cm = 10"
REC19	Soporte con goma	Large pad	Braccia contatto	Support	6.800 kg +	76 cm = 30"
REC20	Soporte con goma	Large pad	Braccia contatto	Support	- 6.800 kg	45.7 cm =18"

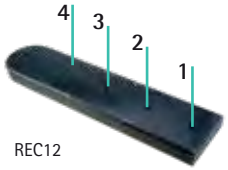

REC12


REC15
REC16


REC17
REC18


REC19
REC20

REF				
RECNSCYL	Pistón	Piston	Pistone	Vérin
RECKFW	Rueda hidráulica	Hydraulic jack FT-Wheel	Ruota idraulica	Roue


RECNSCYL


RECKFW

SOPORTES PARA COLAS

RECJO6HD
Carro con gato hidráulico para la instalación de todo tipo de colas.
Permite desmontar o montar colas, una sola persona.
Especialmente útil en embarcaciones con plataforma integrada.
Construido con brazos extra largos de sujección y base con 4 ruedas neumáticas.
Gran capacidad de elevación para colas de peso extra.
También en colas de doble hélice.
Varias regulaciones.

STANDS FOR STERN DRIVES

RECJO6HD
Stern drive installer.
Works in all makes and models.
Allows one man to remove and install stern drives.
Especially helpful on boats with integrated swim platforms.
Built with extra long clamping arms and wheel base, plus heavyduty lifting capacity for those extra heavy drives.
Also works great on dual prop drives.
Unique low cost shop tool.
4 air tires allow for rugged yard use.

SUPPORTI PER PIEDI

RECJO6HD
Carro con crik idraulico per l'installazione di tutti i tipi di piedi.
Permette ad una persona di smontare o montare i piedi da solo.
Specialmente utile nelle imbarcazioni con piattaforma integrata.
Costruito con larghi bracci di fissaggio e una base con 4 ruote pneumatiche.
Grande capacità di sollevamento per piedi con peso extra.
Anche per piedi con doppia elica.
Varie regolazioni.

SUPPORTS D'EMBASES

RECJO6HD
Chariot avec vérin hydraulique pour l'installation de tous types d'embase.
Il permet à une seule personne de démonter ou de monter des embases.
Particulièrement utile dans les bateaux avec plate-forme intégrée.
Construit avec des bras de support extra longs et une base avec 4 roues pneumatiques.
Grande capacité de levage pour des embases de poids important.
Également en arbre double hélice.

REF
RECJO6HD



REF				
RECKOCYL	Pistón	Piston	Pistone	Vérin
RECKRW	Rueda completa	Hydraulic jack RE-Wheel	Ruota completa	Roue complète
RECKFW	Rueda hidráulica	Hydraulic jack FT-Wheel	Ruota idraulica	Roue
RECJO10	Suplemento 25 cm	Suplement 10"	Supplemento 25 cm	Rallonge de 25 cm
RECHANDLEJO6HD	Maneta	Handle	Maniglia	Poignée
RECSPRINGJO6HD	Muelle	Spring	Molla	Ressort


RECKOCYL


RECJO10


RECKRW RECKFW


RECHANDLEJO6HD

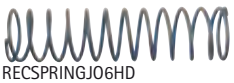
RECSPRINGJO6HD

RECWS3
Soporte trabajo reparación todo tipo de colas y motores fueraborda.

REF
RECWS3

RECWS3

Work station.
Holds all kind of drives and outboard engines.

RECWS3

Supporto lavoro per riparare tutti i tipi di piedi e motori fuoribordo.

RECWS3

Support pour les travaux de réparation de tous types d'embase et de moteurs hors-bord.



RECSR9
Soporte para 9 colas.
Mantiene el taller limpio y organizado.
Protege las colas de golpes y daños.

RECSR9
Holds 9 stern drives.
Keeps shop looking neat and clean.
Protects drives from being cratched and damaged.

RECSR9
Supporto per 9 piedi.
Mantiene l'officina pulita e organizzata.
Protegge i piedi dai colpi e dai danni.

RECSR9
Charriot pour le stockage de 9 embases.
Maintient l'atelier propre et organisé.
Protège les pieds d'embase des chocs et des dommages.

REF
RECSR9

Recmar



REF
RECSR9WHEEL



SOPORTES PARA MOTORES

STANDS FOR ENGINES

SUPPORTI PER MOTORI

SUPPORTS MOTEUR

Soporte de trabajo giratorio 360º con ruedas. Para todo tipo de motores; GM, FORD, VOLVO.
Ideal para reparaciones completas.

Allow engine to be rotated 36 0º.
Adjustable mounting plate will accommodate all engine types.

Carrello supporto motore, permette il movimento per 360º utile per lavorazioni in coppa.
Fornito di ruote piene, può montare tutti i blocchi GM, FORD, VOLVO.

Support de travail rotatif à 360 ° avec roues. Pour tous types de moteurs; GM, FORD, VOLVO. Idéal pour des réfections complètes.

REF
RECTOOL1

Recmar





YARES2
Soporte trabajo giratorio 360º con ruedas. Para todo tipo de motores: GM, FORD, VOLVO.
Ideal para reparaciones completas.
Se le pueden adaptar los soportes referencias YARCHA para GM y YARFHA para FORD y probar motores en funcionamiento.

YARES2
360º rotating work support with wheels. For all types of engines: GM, FORD, VOLVO.
Ideal for complete repairs. You can adapt the YARCHA reference supports for GM and YARFHA for FORD and test running engines.

YARES2
Supporto lavoro girevole 360º con ruote.
Per tutti i tipi di motori: GM, FORD, VOLVO.
Ideale per riparazioni complete.
Si possono adattare i supporti di riferimento YARCHA per GM e YARFHA per FORD e provare i motori in funzione.

YARES2
Support de travail rotatif à 360° avec roues. Pour tous types de moteurs : GM, FORD, VOLVO.
Idéal pour des réparations complètes.
Vous pouvez adapter les supports de référence YARCHA pour GM et YARFHA pour FORD et tester les moteurs en cours d'utilisation.

REF	
YARES2	GM, FORD, VOLVO
YARFHA	Kit FORD
YARCHA	Kit GM





YARFHA YARCHA



PINTURAS PAINTS PITTURE PEINTURES

PINTURA EN SPRAY

Sprays de pintura con los colores originales para retoque de los motores, interiores, intra-fueraborda y colas fueraborda más usuales.
Capacidad: 400 ml.

SPRAY PAINT

Spray paints with the original colors for maintenance and painting and outboard marine engine as well as stern-drives units.
Bottle: 400 ml.

PITTURE SPRAY

Vernice spray con i colori originali per ritocchi dei motori entrobordo, entro-fuoribordo ed i piedi.
Capacità: 400 ml.

PEINTURE EN SPRAY

Peinture en aérosol aux couleurs originales pour la retouche des moteurs in-bord et les embases les plus courantes.
Capacité: 400 ml.

REF		COLOR	COLOUR	COLORE	COULEUR
GS90019		Barniz transparente	Clear Varnish	Vernice trasparente	Vernis transparent
GS90037	Evinrude	Azul XP	Blue XP	Blu XP	XP bleu
GS90030	Johnson	Blanco (1972-90)(1993+)	White (1972-90)(1993+)	Bianco (1972-90) (1993+)	Blanc (1972-90)(1993+)
GS90026	Johnson	Blanco (1981-83)	White (1981-83)	Bianco (1981-83)	Blanc (1981-83)
GS90039	Johnson	Plata metalizado	Silver Metal	Argento metallizzato	Argent métallisé
GS90040	Mariner	Gris	Grey	Grigio	Gris
GS90002	Mercury Mercruiser	Negro	Black	Nero	Noir
GS90006	Caterpillar	Amarillo	Yellow	Giallo	Jaune
PS111028	Cummins	Blanco	White	Bianco	Blanc
PS111047	Cummins	Blanco hueso	White bone	Bianco osso	blanc os
PS111035	Detroit Diesel	Plateado	Silver	Argento	Argent
PS111091	IVECO / AIFO	Rojo	Red	Rosso	Rouge
PS114704	NanniDiesel	Azul Metal	Blue Metal	Blu Metallizzato	Bleu métal
PS114709	OMC	Cola Cobra	Cobra Stern-drive	Piede Cobra	Embase Cobra
PS114699	Perkins	Verde Metal	Green Metal	Verde Metallizato	Vert métallisé
PS114700	Perkins	Azul (1983+)	Blue (1983+)	Blu (1983+)	Bleu (1983+)
PS114701	Perkins	Azul (1987)	Blue (1987)	Blu (1987)	Bleu (1987)
GS90031	Solé Diesel	Azul	Blue	Blu	Bleu
PS111044	Volvo	Gris (1995)	Grey (1995)	Grigio (1995)	Gris (1995)
GS90034	Volvo	Gris Aquamatic	Grey Aquamatic	Grigio Aquamatic	Gris Aquamatic
GS90005	Volvo	Rojo (1972+)	Red (1972+)	Rosso (1972+)	Rouge (1972+)
GS90007	Volvo	Verde agua (1972+)	Green water (1972+)	Verde acqua (1972+)	Vert (1972+)
GS90029	Volvo	Gris (1989)	Grey (1989)	Grigio (1989)	Gris (1989)
GS90003	Volvo	Gris metalizado SX/DPX	Grey Metal SX/DPX	Grigio metallizzato SX/DPX	Gris métallisé SX/DPX
GS90004	Yanmar	Gris metalizado (1987+)	Grey Metal (1987+)	Grigio metallizzato (1987+)	Gris métallisé (1987+)
GS90015		Inox.	SS.	Inox.	Inox.



GOLDENSHIP

KIT DE PINTURA

Kit de pintura de poliuretano bicomponente, compuesto por pintura base, endurecedor y diluyente.
Puede aplicarse a pistola o brocha.
Por su naturaleza de poliuretano y acrílica es muy resistente, suave y muy resistente a la intemperie salvo en casos de soporte poroso.
Rendimiento por un kit:
1 capa = 10 m^2
2 capas = 6 m^2.

PAINT KIT

Paint kit of two components polyurethane paint.
Easy application by brush or air pistol.
Its nature polyurethane and acrylic permits apply without primer except on porous surfaces.
1 layer of paint = 10 m^2
2 layers of paint = 6 m^2

KIT DI VERNICE

Kit pitture in poliuretano bicomponente, composto da pittura base, indurente e diluente.
Può essere applicato tramile pistola o pennello. Molto resistente alle intemperie salvo in caso di porosità.
Rendimento per 1 kit:
1 strano = 10 m^2
2 strati = 6 m^2

PROTECTION DU MOTEUR

Kit de peinture polyuréthane bi-composants, composé d'une base et d'un durcisseur, plus le diluant.
Elle peut être appliquée au pistolet ou au pinceau. Très résistante aux intempéries sauf en cas de surface poreuse.
Rendement pour 1 kit:
1 couche = 10 m^2
2 couches = 6 m^2

REF					
PS4688	Mercruiser	Negro	Black	Nero	Noir
PS4706	Volvo	Rojo 72	Red 72	Rosso 72	Rouge 72
PS4707	Volvo	Verde agua 72	Green water 72	Verde acqua 72	Vert acqua 72

Supermarine



RECAMBIOS MARINOS

IMPRIMACIÓN PARA MOTOR | SPRAY PRIMER | PRIMER PER MOTORI | PRIMER POUR MOTEUR



REF	
GS90001	400 ml
GS90012	400 ml
GS90013	400 ml

GOLDENSHIP

Dotado de gran adhesion sobre acero inox, bronce, aluminio, etc.
Aplicación a brocha o rodillo.
Para utilizar previo al Velox.
Utiliza el diluyente Nº4

Metal primer with excellent adhesion
on al metals, stainless steel, bronze, aluminum, etc.
To be used before Velox.
Uses thinner Nº4.

Aderisce all'acciaio inox, bronzo, alluminio etc.
Applicazione con pennello o rullo.
Utilizzare prima Velox.
Utilizza un diluente n°4..

Adhère à l'inox, au bronze, à l'aluminium, etc. Application au pinceau ou au rouleau.
À appliquer avant Velox Plus.
Utilisez avec le diluant n ° 4.



REF	
SED4610100	250 cc
SED4610101	500 cc
SED4610102	2500 cc

MARLIN

ANTIFOULING

Antifouling especial para ejes, hélices y colas. Protección extra para las partes metálicas permanentemente sumergidas. No se degrada con la corriente galvánica.
Utiliza el diluyente Nº4.

Antifouling specific for submerse metal parts, as shafts, propellers and stern-drives. It's not degradated by galvanic currents.
Uses thinner Nº4.

Antivegetativa per assi, eliche e piedi. Protezione extra per le parti metalliche sommerse tutto il tempo. Non si rovina con la corrente galvanica. Utilizza un diluente Nº4.

Antifouling pour arbres, hélices et embases. Protection spécifique pour les pièces métalliques immergées. Il n'est pas dégradé par les courants galvaniques. Utilisez avec le diluant Nº4.

REF	
SED4612903	250 cc
SED4612902	500 cc
SED4613003	250 cc
SED4613002	500 cc
SED4613103	250 cc
SED4613102	500 cc
SED4613125	2500 cc
SED4613403	250 cc
SED4613402	500 cc

MARLIN



Antifouling para aplicar sobre colas fueraborda.

Antifouling for stern-drives.
.

Antivegetativa da applicare nei piedi fuoribordo.

Antifouling pour embases en spray.



REF	
GS90008	400 ml
GS90009	400 ml
GS90010	400 ml
GS90011	400 ml

GOLDENSHIP

DILUYENTE PARA ANTIFOULING VELOX | THINNER FOR VELOX ANTIFOULING | DILUENTE PER ANTIVEGETATIVA VELOX | DILUANT POUR ANTIFOULING VELOX

REF		
SED4617101	Nº 2	500 cc
SED4617201	Nº 4	500 cc

MARLIN



MANTENIMIENTO MOTOR — ENGINE MAINTENANCE — MANUTENZIONE MOTORE — MAINTENANCE MOTEUR

PROTECTOR DE MOTOR — ENGINE PROTECTOR — PROTETTORE MOTORE — PROTECTION DU MOTEUR

Producto a base de aceites y grasas que protege del óxido y la corrosión las superficies exteriores y partes eléctricas de los motores durante el invernaje. Evita la formación de agarrotamientos debido a la presencia de salitre. Facilita el arranque eliminando los residuos de agua y humedad. Se elimina facilmente.

Oil & grease made, protects from rust & corrosion external engine surface during winter storage.
Removes salt deposit and loosens rusted parts.
Easy to remove.

Prodotto a base di olio e grasso che protegge dall'ossidazione e dalla corrosione le superfici esterne e parti elettriche dei motori durante l'invernaggio.
Evita la formazione dell'ossidazione dovuta alla presenza del salmastro.
Facilita l'accensione eliminando i residui di acqua e umidità.
Si elimina facilmente.

Produit à base d'huiles et de graisses qui protège les surfaces extérieures et les parties électriques des moteurs de la rouille et de la corrosion pendant l'hivernage. Il empêche la formation de crises dues à la présence de salpêtre. Il facilite le démarrage en éliminant les résidus d'eau et d'humidité.
Il s'enlève facilement.

REF	
GS90090	500 ml

GOLDENSHIP



PROTECTOR DIELÉCTRICO — DIELECTRIC PROTECTOR — PROTETTORE DIELETTRICO — PROTECTEUR DIÉLECTRIQUE

Protector dieléctrico antihumedad para uso marino. Protege de la humedad y oxidación todos las partes eléctricas y mecánicas de los motores marinos. Ideal para invernaje de motores y mantenimiento de temporada.

Prevents humidity and corrosion of all electric and mechanical parts in marine engines.
Specially indicate for winter storages and maintenance in the season.

Protettore dielettrico antiumidità per uso marino.
Protegge dalla umidità e dall'ossidazione tutte le parti elettriche e meccaniche dei motori marini.
Ideale per invernaggio dei motori e manutenzione di lunga durata.

Protecteur diélectrique anti-humidité pour usage marin.
Protège toutes les pièces électriques et mécaniques des moteurs marins contre l'humidité et l'oxydation. Idéal pour l'hivernage des moteurs et l'entretien saisonnier.

REF	
GS90092	400 ml

GOLDENSHIP



DESCALCIFICADOR DE MOTOR — DESCALING ENGINE FLUSH — DECALCIFICANTE MOTORE — DÉTARTRANT MOTEUR

Limpiador para eliminar las incrustaciones, algas, y suciedad en los motores marinos.
No daña las juntas ni impulsores de goma.

Removes scale, zebra mussels, general marine growth and vegetation rom all marine engines.

Pulitore per eliminare le incrostazioni, alghe, e sporcizia nei motori marini.
Non danneggia guarnizioni e giranti in gomma.

Nettoyant pour éliminer le tartre, les algues et la saleté dans les moteurs marins.
N'endommage pas les joints ou les turbines en caoutchouc.

REF	
STA92600	3,8 L

Star brite



ACEITE DE INVERNAJE — FOGGING OIL — OLIO INVERNAGGIO — FOGGING OIL

Para inyectar en los carburadores de motores a 2 y 4 tiempos.
Protege las paredes de los cilindros, aros de pistones y otras superficies de la cámara de combustión durante los periodos de invernaje, facilitando el arranque del motor después de éste periodo.

Prevents corrosion when storing inboard or outboard engines for a extended period of time. Special formula makes starting engine after storage quick and easy.

Da inserire nei carburatori dei motori da 2 e 4 tempi.
Protegge le pareti dei cilindri, le fasce dei pistoni e altre superfici della camera di combustione durante il periodo di invernaggio, facilitando la partenza del motore dopo questo periodo.

Pour injecter dans les carburateurs des moteurs 2 et 4 temps.
Il protège les parois des cylindres, segments et autres surfaces de la chambre de combustion pendant les périodes d'hivernage, facilitant le démarrage du moteur après cette période.

REF	
GE22001	340 g

RECMAR

GE22001



ADITIVO GASOLINA / GASOLINE ADDITIVE / ADDITIVO BENZINA / ADDITIF ESSENCE

Elimina y previene los problemas del ethanol. Reduce todas las emisiones contaminantes. Estabiliza la química del combustible durante 1 año. Reduce el mantenimiento del sistema de combustible. Elimina la producción de carbonilla. Reduce el consumo de combustible.

Eliminates and prevents ethanol fuel problems. Reduces all emisions. Prevents fuel oxidation and stabilizes fuel chemistry for at least 1 year. Lower fuel system maintenance. Eliminates carbon build-up. Increases fuel economy.

Elimina e previene i problemi dell'etanolo. Riduce tutte le emissioni contaminanti. Stabilizza la chimica del combustibile durante 1 anno. Elimina la produzione di residui carboniosi. Riduce il consumo del combustibile.

Élimine et prévient les problèmes d'éthanol. Réduis toutes les émissions polluantes. Stabilise la chimie du carburant pendant 1 an. Réduit l'entretien du système de carburant. Élimine la production de charbon. Réduis la consommation de carburant.

REF		PARA TRATAR HASTA / TREAT UP / TRATTARE FINO A / POUR TRAITER JUSQU'À
STA93008	237 ml	475 L
STA93016	473 ml	950 L

GAS



LIMPIADOR INYECTORES Y CARBURADORES GASOLINA / CARBURATOR & FUEL INJECTOR CLEANER / PULITORE INIETTORE E CARBURATORE DE BENZINA / NETTOYANT D'INJECTEURS ET CARBURATEURS D'ESSENCE

Mejora la potencia y aceleración. Lubrifica todo el sistema de combustible. Maximiza el ahorro de combustible. Alarga la vida de los inyectores.

Improves power and acceleration. Lubricates entire fuel system. Maximizes fuel economy. Extends life of injectors and engine.

Migliora l'accelerazione. Lubrifica tutto il sistema di combustione. Allunga la vita degli iniettori.

Améliore la puissance et l'accélération. Lubrifie l'ensemble du système d'alimentation en carburant. Optimise les économies de carburant. Prolonge la durée de vie des injecteurs.

REF		PARA TRATAR HASTA / TREAT UP / TRATTARE FINO A / TRAITE JUSQU'A	
GE21204	250 ml	130 L	GAS DIESEL
GE15210			DIESEL

GOLD EAGLE



GE21204 GE15210

LIMPIADOR CARBURADOR Y STARTER / CARBURATOR & CHOKE CLEANER / PULITORE CARBURATORE / NETTOYANT CARBURATEUR

Aerosol para motores de 2 y 4 tiempos. Para limpieza del carburador y de los componentes internos del motor. Asegura arranques fáciles y ralentí suave. Despega los aros de los pistones. Restablece la potencia del motor.

Spray for all 2 and 4 cycle engines. Marine motor de-carb. Dissolves gum, varnish dirt and carbon deposits. Restore power & performance. Reduce fuel consumption.

Aerosol per motori di 2 e 4 tempi. Per la pulizia del carburatore e dei componenti interni del motore. Assicura partenze più facili e un minimo stabile. Lubrifica le fasce dei pistoni. Ristabilizza la potenza del motore.

Spray pour moteurs 2 et 4 temps. Pour nettoyer le carburateur et les composants internes du moteur. Assure des démarrages faciles et un ralenti en douceur. Décolle les segments du piston. Restaure la puissance du moteur.

REF	
GEGC15	354 g

GOLD EAGLE



ESTABILIZADOR DE CARBURANTE

Elimina el agua, limpia los carburadores e inyectores. Contiene antioxidantes para prevenir el óxido y la corrosión. No requiere vaciar el depósito para el invernaje y mantiene el combustible fresco para un rápido y fácil arranque.

FUEL STABILIZER

Keeps fuel fresh and allows for easier starts after periods of storage. Removes water, cleans carburetors and fuel injectors. Contains antioxidant to prevent rust and corrosion.

STABILIZZATORE CARBURANTE

Elimina l'acqua, pulisce i carburatori e iniettori. Contiene antiossidanti per prevenire l'ossidazione e la corrosione. Non è necessario svuotare il serbatoio per l'invernaggio e mantiene il carburante fresco per una rapida e facile partenza.

STABILISATEUR DE CARBURANT

Élimine l'eau, nettoie les carburateurs et les injecteurs. Contient des antioxydants pour empêcher la rouille et la corrosion. Il ne nécessite pas de vider le réservoir pour l'hivernage et maintient le carburant frais pour un démarrage rapide et facile.

REF		PARA TRATAR HASTA TREAT UP TRATTARE FINO A POUR TRAITER JUSQU'À	
GE22207	475 ml	150 L	GAS
GE22254	946 ml	1.200 L	DIESEL

GOLD EAGLE



GE22254

GE22207

LIMPIADOR DEPOSITOS

Excepcionalmente efectivo en la limpieza de lodos y algas en depósitos de diesel. Retrasa la formación de nuevas algas que puedan contaminar el combustible. Nuevo y revolucionario aditivo que reemplaza los costosos sistemas de limpieza de los depósitos de combustible.

FUEL TANK CLEANER

Exceptionally effective at cleaning sludge and algae from diesel tanks. Slows the recurrence of new algae that can contaminate fuel. A revolutionary new additive that replaces expensive fuel polishing and tank cleaning.

PULITORE SERBATOIO

Eccezionale efficacia nella pulizia dal fango e alghe nel serbatoio diesel. Ritarda la formazione di nuove alghe che possono contaminare il combustibile. Nuovo e rivoluzionario additivo che rimpiazza i costosi sistemi di pulizia dei serbatoi del combustibile.

NETTOYANT POUR RESERVOIR

Efficacité exceptionnelle pour nettoyer la boue et les algues dans le réservoir de diesel. Retarde la formation de nouvelles algues qui peuvent contaminer le carburant. Nouvel additif révolutionnaire qui remplace les systèmes coûteux de nettoyage des réservoirs de carburant.

REF		PARA TRATAR HASTA TREAT UP TRATTARE FINO A TRAITE JUSQU'A	
STA93664	1,9 L	950 L	GAS DIESEL
STA93116	473 ml	1.900 L	DIESEL

STAR BRITE STAR TRON



STA93664

STA93116

ANTISALITRE

Diseñado especialmente para eliminar sedimentos de sal de cualquier superficie pintada, de metal, fibra de vidrio, vinilo, caucho, cristal o plástico. Es el método más eficaza para proteger los motores, los aparejos de pesca... Genera una capa de polímeros que evita futuras sedimentaciones.

SALT OFF

It ss specifically formulated to quickly and effectively remove salt deposits from metal, fiberglass, plastic or painted surfaces.
It contains special polymers that bond to the treated surface to help prevent the formation of future deposits.

ANTISALITRE

Appositamente progettato per rimuovere depositi di sale da qualsiasi superficie verniciata, metallo, fibra di vetro, vinile, gomma, vetro o plastica. E il metodo più efficace per proteggere motori, attrezzi da pesca ...
Genera uno strato di polimeri che impedisce la futura sedimentazione.

PRODUIT ANTI-SEL "SALT OFF"

Spécialement conçu pour éliminer les dépôts de sel sur toute surface peinte, métal, fibre de verre, vinyle, caoutchouc, verre ou plastique. C'est la méthode la plus efficace pour protéger les moteurs, les engins de pêche, etc. Le revêtement PTEF® contenu dans Salt Off protège dès lors le moteur contre la rouille et la corrosion.

REF
STA94100

Star brite



REF	
STA93900	3,78 L
STA93922	650 ml
STA93932	1 L



STA93922



STA93900



STA93932



BARNACLE BUSTER® LIMPIEZA DE CIRCUITOS CONCENTRADO

RÁPIDO, SEGURO, NO TÓXICO, BIODEGRADABLE, NO CORROSIVO, NO PELIGROSO
Limpieza de circuitos refrigerados por agua salada.
Barnacle Buster elimina el crecimiento de microorganismos marinos de forma segura, no tóxica y es 100% biodegradable.
Formulado para ofrecer una alternativa rápida, segura y rentable para la limpieza de los sistemas de refrigeración con agua de mar sin dañar juntas ni metales.
Ha pasado la prueba de ensayo California Marine Life Toxicity Test.

Concentrado 1:4 (1 parte de Buster en 4 partes de agua).

BARNACLE BUSTER® MARINE GROWTH REMOVER

Barnacle Buster is a safe, non-toxic, and biodegradable marine growth remover specifically formulated to be a fast, safe, and cost effective alternative to mechanical cleaning of water cooled equipment. Barnacle Buster can safely be recirculated through the sea water cooling systems of main engines, generators, air conditioners, etc., dissolving barnacles, zebra mussels, calcium, rust, lime and all other mineral deposits.
It passed the California Marine Life Toxicity Test.

Concentrado 1:4 (1 parte de Buster en 4 partes de agua).

BARNACLE BUSTER® PULIZIA DI CIRCUITI CONCENTRATI

VELOCE, SICURO, NON TOSSICO, BIODEGRADABILE, NON CORROSIVO, NON PERICOLOSO
Pulizia dei circuiti raffreddati ad acqua salata. Barnacle Buster elimina la crescita di microrganismi marini in modo sicuro, non tossico ed è biodegradabile al 100%. Formulato per offrire un'alternativa rapida, sicura ed economica per la pulizia dei sistemi di raffreddamento con acqua di mare senza danneggiare guarnizioni o metalli. Ha superato il test California Marine Life Toxicity Test.

Concentrato 1:4 (1 parte di Buster in 4 parti d'acqua)

BARNACLE BUSTER® LA SOLUTION ÉCOLOGIQUE

new

RAPIDE, SÛR, NON TOXIQUE, BIODEGRADABLE, NON CORROSIF, NON DANGEREUX
Peut être recyclé en toute sécurité à travers les systèmes de refroidissement d'eau de mer.
Elimine tous les coquillages et tous les autres dépôts minéraux.
Peut être utilisé en toute sécurité dans: Moteurs, Systèmes de réfrigération d'eau douce ou salée, Condensateurs pour les systèmes de climatisation et de réfrigération, Systèmes d'eau potable, Echangeurs de température, Tours de refroidissement, Refroidisseurs de quille, Réfrigérateurs, Chauffe-eau...
Il a passé le California Marine Life Toxicity Test.

Format concentré : 1: 4 (1 partie de Buster dans 4 parties d'eau).

TRAC ECOLOGICAL Green Products

REF		
TRE1206MQ	1/4 Gal	0.95 l
TRE1206MG	1 Gal	3.785 l
TRE1206MP	5 Gal	18,9 l

REF		
TRE1212MG	1 Gal	3.785 l





PORT-O-FLUSH JR.

Equipo de limpieza portátil para barcos de hasta 40´, motores hasta 750hp. Pequeños equipos de aire acondicionado, generadores, sistemas de refrigeración, etc. Tubería hasta 1,5" de diámetro interior, proyectos de lavado que van de 1 a 20 galones.

To cure: Engine Overheating, Clogged Pipes, Poor Heat Transfer on Air Conditioning & Refrigeration Systems, Small Parts Cleaning
Flushing Projects Ranging From 1-20 Gallons, Engines up to 750 HP, Small air conditioning & refrigeration systems, Piping up to 1.5" ID.

Pulizie portatili per barche fino a 40 , motori fino a 750hp. Piccoli impianti di condizionamento, generatori, sistemi di raffreddamento, ecc. Tubi fino a 1,5" di diametro interno, progetti di lavaggio che vanno da 1 a 20 galloni

Équipement de nettoyage portable pour bateaux jusqu'à 40´, moteurs jusqu'à 750hp.
Petit système de climatisation et de réfrigération, Groupe électrogène. Petit échangeur de température.
Tuyauterie jusqu'à 1.5" ID. Capacité de rinçage de 1-20 Gallons.

TRAC ECOLOGICAL Green Products

REF	
TRE1245E	220V AC 12V





Permatex

FORMADORES DE JUNTAS | GASKET MAKER | FORMATORI GUARNIZIONE | FORMA JOINTS

SILKRON SPG

Silicona acética monocomponente especial para la formación de juntas. Resistente al aceite y altas temperaturas.. Puede eliminarse fácilmente en desmontaje o reparación.

Single-component acetic silicone, especially for jointing. Resistant to oil and high temperatures. Can be easily removed during disassembly or repair.

Silicone acetico monocomponente, specialmente per guarnizioni. Resistente all'olio e alle alte temperature. Può essere facilmente rimosso durante lo smontaggio o la riparazione.

Silicone acétique monocomposant, notamment pour le jointoiement. Résistant à l'huile et aux températures élevées). Peut être facilement retiré lors du démontage ou de la réparation.

REF			
PER54291	-60ºC--> 220ºC	75 ml	24
PER54292		200 ml	12



SILKRON HT

Sellador de silicona para la formación de juntas "in situ" con características de resistencia al aceite y altas temperaturas.

Silicone sealant for in-situ jointing with oil and high temperature resistance characteristics.

Sigillante siliconico per giunzioni in situ con caratteristiche di resistenza all'olio e alle alte temperature.

Mastic silicone pour le jointoiement in-situ avec des caractéristiques de résistance à l'huile et aux hautes températures.

REF			
PER54283	-60ºC--> 300ºC	300 ml	12



SUPRA BLACK

MÁXIMA RESISTENCIA AL ACEITE
Formador de juntas con extraordinaria resistencia al aceite, de curado rápido, bajo olor, no corrosivo, no daña sensores de oxígeno. Posee una alta flexibilidad y resistencia al aceite como consecuencia de su sistema de adhesión patentado. Resistencia a los fluidos de automoción y vibraciones.

MAXIMUM OIL RESISTANCE
Sealant with outstanding oil resistance, fast curing, low odour, non-corrosive, non-damaging to oxygen sensors. High flexibility and oil resistance due to patented adhesion system. Resistant to automotive fluids and vibrations.

MASSIMA RESISTENZA ALL'OLIO
Sigillante con un'eccezionale resistenza all'olio, a indurimento rapido, a basso odore, non corrosivo, non dannoso per i sensori di ossigeno. Elevata flessibilità e resistenza all'olio grazie al sistema di adesione brevettato. . Resistente ai fluidi e alle vibrazioni del settore automobilistico.

RÉSISTANCE MAXIMALE À L'HUILE
Produit d'étanchéité présentant une résistance exceptionnelle à l'huile, à durcissement rapide, à faible odeur, non corrosif, n'endommageant pas les sondes à oxygène. Grande flexibilité et résistance à l'huile grâce à un système d'adhésion breveté. Résistant aux fluides automobiles et aux vibrations.

REF			
PER35124	-70ºC--> 260ºC	80 ml	12



SUPRA GREY

MOTORES DE GRAN POTENCIA
Formulado para aplicaciones de elevado par. Muy resistente a compresión y altas presiones. No corrosivo y bajo olor. Resistente a fluidos de automoción, aceite y vibración.

HEAVY DUTY ENGINES
Formulated for high torque applications. Highly resistant to compression set and high pressures. Non-corrosive and low odour. Resistant to automotive fluids, oil and vibration.

MOTORI PER IMPIEGHI GRAVOSI
Formulato per applicazioni ad alta coppia di serraggio. Altamente resistente alla compressione e alle alte pressioni. Non corrosivo e a basso odore. Resistente ai fluidi automobilistici, all'olio e alle vibrazioni.

MOTEURS À USAGE INTENSIF
Formulé pour les applications à couple élevé. Hautement résistant à la compression rémanente et aux pressions élevées. Non corrosif et peu odorant. Résistant aux fluides automobiles, à l'huile et aux vibrations.

REF			
PER35134	-70ºC--> 260ºC	80 ml	12



SUPRA COPPER

ALTA TEMPERATURA
Formador de juntas formulado para su aplicación en motores que trabajan a gran temperatura, motores de 4 cilindros, turboalimentados y de grandes prestaciones. No daña sensores de oxígeno. Tres veces más resistente al aceite que las siliconas convencionales. Color cobre.

HIGH TEMPERATURE
Gasket former formulated for use in high temperature, high performance, turbocharged high temperature, 4 cylinder, turbocharged and high performance engines. Will not damage oxygen sensors. Three times more oil resistant than conventional silicones. Copper coloured.

ALTA TEMPERATURA
Formulato per l'uso in motori ad alta temperatura, a 4 cilindri, turbocompressi e ad alte prestazioni. Non danneggia i sensori di ossigeno. Tre volte più resistente agli oli rispetto ai siliconi convenzionali. Color rame..

TEMPÉRATURE ÉLEVÉE
Produit d'étanchéité formulé pour être utilisé dans les moteurs à haute température, 4 cylindres, turbocompressés et à haute performance. N'endommage pas les capteurs d'oxygène. Trois fois plus résistant à l'huile que les silicones classiques. Couleur cuivre.

REF			
PER35144	-70ºC--> 350ºC	80 ml	12



new

Permatex

ADHESIVOS

FIJADOR ALTA RESISTENCIA ROJO
Formula exclusiva para motores modernos y aplicaciones de alto rendimiento que requieren resistencia a temperaturas extremas. Protege la rosca de la corrosión. Desmontable con calor y herramientas especiales.

ADHESIVES

HEAVY DUTY FIXER RED
Unique formula for modern engines and high performance applications requiring extreme temperature resistance. Protects threads from corrosion. Removable with heat and special tools.

ADESIVI

FISSATORE PER IMPIEGHI GRAVOSI ROSSO
Formula unica per motori moderni e applicazioni ad alte prestazioni che richiedono una resistenza a temperature estreme. Protegge le filettature dalla corrosione. Rimuovibile con calore e strumenti speciali.

ADHÉSIFS

FIXATEUR POUR TRAVAUX LOURDS ROUGE
Formule unique pour les moteurs modernes et les applications haute performance nécessitant une résistance à des températures extrêmes. Protège les filets de la corrosion. Démontable à la chaleur et avec des outils spéciaux.



REF			
PER35375	-54ºC--> 149ºC	50 ml	6

FIJADOR MEDIA RESISTENCIA AZUL
Evita el aflojado causado por las vibraciones. Protege la rosca de la corrosión. Desmontable con herramientas de mano.

MEDIUM-STRENGTH FIXATIVE BLUE
Prevents loosening caused by vibrations. Protects the thread from corrosion. Can be removed with hand tools.

BLU FISSATIVO A MEDIA RESISTENZA
Impedisce l'allentamento causato dalle vibrazioni. Protegge la filettatura dalla corrosione. Può essere rimosso con attrezzi manuali..

BLEU FIXATEUR DE FORCE MOYENNE
Empêche le desserrage causé par les vibrations. Protège le fil de la corrosion. Peut être retiré avec des outils manuels.



REF			
PER35395	-54ºC--> 149ºC	50 ml	6

GRASA DE SPRAY

Lubricante especial de larga duración. Su fluidez facilita la aplicación y su secado rápido permite una óptima lubricación incluso en lugares inaccesibles. No descuelga. Resistencia a altas presiones.

GREASE SPRAY

Special long lasting lubricant. Its fluidity facilitates the application and its quick drying allows an optimal lubrication even in inaccessible places. No sagging. High pressure resistance.

GRASSO A SPRUZZO

Lubrificante speciale a lunga durata. La sua fluidità lo rende facile da applicare e le sue proprietà di asciugatura rapida consentono una lubrificazione ottimale anche in punti inaccessibili. Nessun cedimento. Resistenza alle alte pressioni.

GRAISSE EN SPRAY

Lubrifiant spécial longue durée. Sa fluidité facilite l'application et son séchage rapide permet une lubrification optimale même dans les endroits inaccessibles. Pas d'affaissement. Résistance à la haute pression.



REF		
PER35621	500 ml	12

AFLOJATODO

Penetrante y lubricante grafitado para soltar, deslizar o desenroscar con facilidad toda clase de piezas agarrotadas por el óxido o la suciedad. Facilita el posterior desmontaje.

FAST BREAK

Penetrant and graphitized lubricant for easy loosening, sliding or unscrewing of all kinds of parts seized by rust or dirt. Facilitates subsequent disassembly.

ALLENTA TUTTO

Penetrante e lubrificante grafitizzato per facilitare l'allentamento, lo scorrimento o lo svitamento di tutti i tipi di parti bloccate dalla ruggine o dallo sporco. Facilita lo smontaggio successivo.

LIBÈRE TOUT

Lubrifiant pénétrant et graphité pour faciliter le desserrage, le glissement ou le dévissage de toutes sortes de pièces grippées par la rouille ou la saleté. Facilite le démontage ultérieur.



REF		
PER35611	400 ml	24

LIMPIA MOTORES TERCLEN

Para limpiar toda clase de motores, piezas mecánicas, suelos de garajes, etc. No ataca la pintura, gomas o plásticos de motor.

TERCLEN ENGINE CLEANER

For cleaning all kinds of engines, mechanical parts, garage floors, etc. Does not attack paint, rubber or engine plastics.

PULIZIA DI MOTORI TERCLEN

Per la pulizia di tutti i tipi di motori, parti meccaniche, pavimenti di garage, ecc. Non attacca la vernice, la gomma o le plastiche del motore.

NETTOYANT MOTEUR TERCLEN

Pour le nettoyage de toutes sortes de moteurs, de pièces mécaniques, de sols de garage, etc. N'attaque pas la peinture, le caoutchouc ou les plastiques du moteur.



REF		
PER17762	400 ml	24

new

Permatex

SELLADOR DE JUNTAS

Producto sellante de secado al aire con gran poder de adhesión. Permanece flexible sin agrietarse en vibraciones y cambios de temperatura. Resistente a la gasolina, el aceite y refrigerantes.

GASKET CEMENT

Air-drying sealant with high adhesion power. Remains flexible without cracking under vibration and temperature changes. Resistant to petrol, oil and coolants.

SIGILLATORE GUARNIZIONE

Sigillante che asciuga all'aria con un elevato potere di adesione. Rimane flessibile senza incrinarsi in presenza di vibrazioni e sbalzi di temperatura. Resistente a benzina, olio e refrigeranti.

JOINT SEALANT

Scellant séchant à l'air avec un pouvoir d'adhésion élevé. Reste flexible sans se fissurer sous l'effet des vibrations et des changements de température. Résistant à l'essence, à l'huile et aux liquides de refroidissement.



REF			
PER35572	-54ºC--> 204ºC	118 ml	8

SELLADOR DE JUNTAS DE ALTA TEMPERATURA

Sellador de cobre de secado rápido que ayuda a disipar el calor, previene el calentamiento de las juntas y mejora la transferencia de calor. Rellena irregularidades de la superficie. Sella instantáneamente. Resiste todo tipo de fluidos de automoción. Aplicaciones: juntas de culata, juntas de colector de escape, turbocompresores..

HIGH TEMPERATURE GASKET SEALANT

Fast drying copper sealant that helps dissipate heat, prevents joints from heating up and improves heat transfer. Fills surface irregularities. Seals instantly. Resists all types of automotive fluids. Applications: cylinder head gaskets, exhaust manifold gaskets, turbochargers.

SIGILLANTE PER GIUNTI AD ALTA TEMPERATURA

Sigillante per rame a rapida essiccazione che aiuta a dissipare il calore, impedisce il riscaldamento dei giunti e migliora il trasferimento del calore. Riempie le irregolarità della superficie. Sigilla istantaneamente. Resiste a tutti i tipi di fluidi automobilistici. Applicazioni: guarnizioni della testa del cilindro, guarnizioni del collettore di scarico, turbocompressori.

JOINT D'ÉTANCHÉITÉ HAUTE TEMPÉRATURE

Produit d'étanchéité en cuivre à séchage rapide qui aide à dissiper la chaleur, empêche les joints de chauffer et améliore le transfert de chaleur. Comble les irrégularités de surface. Scelle instantanément. Résiste à tous les types de fluides automobiles. Applications : joints de culasse, joints de collecteur d'échappement, turbocompresseurs.



REF		
PER35580	331 ml	12

ESMERIL PARA VÁLVULAS AL AGUA

Producto destinado para el esmerilado (pulido) de válvulas al agua. Contiene inhibidores para evitar la oxidación de las válvulas y asientos.

GRINDING FOR WATER-OPERATED VALVES

Product intended for grinding (polishing) of water valves. Contains inhibitors to prevent rusting of valves and seats. Coarse grit

SMERIGLIATRICE PER VALVOLE DELL'ACQUA

Prodotto destinato alla rettifica (lucidatura) delle valvole dell'acqua. Contiene inibitori per prevenire la ruggine di valvole e sedi.

PATE A RODER POUR SOUPAPES

Produit destiné au meulage (polissage) des sièges de soupape. Contient des inhibiteurs pour empêcher la rouille des soupapes et des sièges.



REF						
PER12073	100 ml	24	Grano grueso	Coarse grain	Grana grossa	Grain grossier
PER12063	100 ml	24	Grano fino	Fine grain	Grano fino	Grain fin





RECAMBIOS MARINOS

LUBRICANTE PARA 2 TIEMPOS / 2-STROKE LUBRICANT / LUBRIFICANTE PER 2 TEMPI / HUILE POUR MOTEURS 2 TEMPS

ACEITE 2 TIEMPOS TC-W3 / 2-STROKE TC-W3 OIL / OLIO 2 TEMPI TC-W3 / HUILE 2 TEMPS TC-W3

Especialmente formulado para motores marinos de 2 tiempos. Inhibidor de corrosión y herrumbre. Gran capacidad de limpieza de las partes internas del motor (pistón, bujías...), evita el pegado de segmentos y la formación de depósitos. Alta fluidez a bajas temperaturas.

Specially formulated for 2-stroke marine engines. Excellent anti-wear protection for the internal parts of the engine. When the engine is not in use, it effectively protects from corrosion and rust. Very effective in maintaining the internal parts of the engine (pistons, spark plugs, etc.) clean, avoiding piston rings from sticking and sediments accumulating.

Formulazione specificamente studiata per motori marino a 2 tempi. Eccellente protezione contro l'usura dei componenti interni del motore. Garantisce un'alta protezione contro la corrosione e la ruggine. Contribuisce a mantenere pulite le parti interne del motore (pistone, candela, ecc.), evita l'aderenza delle fasce del pistone e la formazione di depositi. Alta fluidità a basse temperature.

Formulation spécialement conçue pour les moteurs marins 2 temps. Excellente protection contre l'usure des composants internes du moteur. Il garantit une haute protection contre la corrosion et la rouille. Il aide à maintenir les parties internes du moteur propres (piston, bougie, etc.), évite l'adhérence des segments et la formation de dépôts. Grande fluidité à basses températures.

QUALITY LEVELS
NMMA TC-W3
(NMMA, National Marine Manufacturers Association)

REF		
REC2TU6	1 L	6
REC2TU3	5 L	3



ACEITE MEZCLA 2 TIEMPOS / 2 CYCLE OIL / OLIO MISCELA 2 TEMPI / HUILE 2 TEMPS

PREMIUM PLUS

REF	OEM		
RM92-858026QB1U6	92-858026QB1	1 L	6
RM92-858027QB1U3	92-858027QB1	3,8 L	3



OPTIMAX / DFI

REF	OEM		
RM92-858037QB1U3	92-858037QB1	3,8 L	3



TABLA APLICACIÓN ACEITES 2 TIEMPOS / 2-STROKE OIL APPLICATION TABLE / TABELLA APPLICAZIONE OLIO 2 TEMPI / TABLEAU D'APPLICATION D'HUILE 2 TEMPS

MOTOR	REF
2.5 hp --> 30 hp	REC2TU3
40 hp -->115 hp	REC2TU3
115 hp+	RM92-858037QB1U3
injección directa direct injection iniezione diretta injection directe	RM92-858037QB1U3

LUBRICANTE PARA 4 TIEMPOS | 4-STROKE LUBRICANT | LUBRIFICANTE PER 4 TEMPI | HUILE POUR MOTEURS 4 TEMPS

SAE 5W40

ACEITE 100% SINTÉTICO

Excelente fluidez en frío, facilita el arranque y reduce los desgastes de motor. Evita el pegado de segmentos al dispersar lodos, barnices y otros productos de oxidación a altas temperaturas. Contiene inhibidores antiherrumbre y anticorrosión.

100% SYNTHETIC OIL

Good fluidity in cold temperatures facilitates performance and reduces engine wear. It avoids piston rings from sticking by clearing dirt, varnish and other oil oxidation deposits when subject to high temperatures. Contains effective anti-rust and anti-corrosion inhibitors that protect the engine in the marine environment.

OLIO 100% SINTETICO

Buona fluidità a freddo, facilita la messa in moto e riduce l'usura del motore. Evita l'aderenza delle fasce del pistone, disperdendo fanghi, lacche e altri prodotti derivanti dall'ossidazione dell'olio ad alte temperature. Contiene efficaci inibitori antiruggine e anticorrosione, per proteggere il motore in ambiente marino.

HUILE 100% SYNTHÉTIQUE

Bonne fluidité à froid qui aide au démarrage et réduit la détérioration du moteur. Évite le colllage des segments lors de la dispersion de boue dans le moteur, vernis et autres produits oxydant l'huile à haute température. Contient des inhibiteurs de corrosion et antirouille.

QUALITY LEVELS
API SN/CF
ACEA A3/B3/B4
MB 229.3
VW 502.00/505.00
RN 710
OPEL A&B
JASO MA2

RECLUBE by RECMAR

REF		
REC5W40U6	1 L	6
REC5W40U3	5 L	3
REC5W40205L	205L	1



Especialmente desarrollado para motores de alto rendimiento. Las propiedades especiales de este aceite le permiten lubricar el motor incluso durante el arranque a baja temperatura. El aceite combate la acumulación de lodo y brinda una excelente protección contra el desgaste. Especialmente adecuado para motores que están sujetos a arranques y paradas frecuentes.

Specially developed for high performance engines. The special properties of this oil allow it to lubricate the engine even during low temperature starting. The oil combats sludge buid-up and gives excellent protection against wear. Particularly suitable for engines that are subject to frequent starting and stopping.

Sviluppato appositamente per motori ad alte prestazioni. Le proprietà speciali di questo olio consentono di lubrificare il motore anche durante l'avviamento a bassa temperatura. L'olio combatte il fango accumulato e offre un'eccellente protezione contro l'usura. Particolarmente adatto per motori soggetti a frequenti avviamenti e arresti.

Spécialement développé pour les moteurs hautes performances. Les propriétés particulières de cette huile vous permettent de lubrifier le moteur même lors d'un démarrage à basse température. L'huile combat l'accumulation de boue et offre une excellente protection contre l'usure. Particulièrement adapté aux moteurs soumis à des démarrages et arrêts fréquents.

REF	OEM		
REC21363429	21363429	1 L	API SM
REC21363430	21363430	5 L	

VOLVO PENTA





SAE 10W30
SAE 10W40

REF	OEM		
RM92-8M0086220U6	92-8M0086220	1 L	6
RM92-8M0086221U3	92-8M0086221	4 L	3

QUICKSILVER



RM92-8M0086220U6



RM92-8M0086221U3

SAE 10W30
SAE 10W40

ACEITE SINTÉTICO PREMIUM

Lubricante marino reforzado con bases sintéticas, para motores gasolina 4T fueraborda e intraborda. Especificaciones NMMA FC-W. HTHS elevado, asegura viscosidad a elevadas temperaturas. Anticorrosivo con antioxidantes incorporados, elevadas propiedades antiespumantes.

QUALITY LEVELS:
NMMA FC-31015T
(NMMA, National Marine Manufacturers Association)
API SJ/SG

REF		
REC10W30U6	1 L	6
REC10W30U3	5 L	3
REC10W3020L	20 L	1
REC10W3050L	50 L	1
REC10W30205L	205 L	1

SYNTHETIC PREMIUM OIL

Marine lubricant strengthened with a synthetic base, especially formulated for outboard and inboard 4T petrol engines, with NMMA FC-W specifications. With a high HTHS, it ensures great viscosity at high temperatures.
Better anti-oxidant resistance.
Improved anti-foaming properties.

QUALITY LEVELS
NMMA FC-11815R
(NMMA, National Marine Manufacturers Association)
API SJ/SG

REF		
REC10W40U6	1 L	6
REC10W40U3	5 L	3
REC10W4020L	20 L	1
REC10W4050L	50 L	1
REC10W40205L	205 L	1

OLIO SINTETICO PREMIUM

Lubrificante marino potenziato con basi sintetiche, specificamente formulato per motori a benzina 4T fuoribordo ed entrobordo, a norma specifiche NMMA FC-W. Con indice HTHS più elevato, garantisce un'alta viscosità a temperature elevate. Aumenta la protezione anticorrosione. Maggior resistenza all'ossidazione. Proprietà antischiuma migliorate.

HUILE SYNTHÉTIQUE PREMIUM

Lubrifiant marin renforcée avec des bases synthétiques, pour les moteurs à essence 4T hors-bord et inboard avec des spécifications NMMA FC-W. Avec des HTHS supérieures, qui vous assure une haute viscosité à des températures élevés. Resistance antioxidante majeure. Propriétés anti-mousse améliorés.



RECLUBE by RECMAR

SAE 15W40
MULTIGRADE HIGH PERFORMANCE

Lubricante multigrado marino, superior al nivel SHPD, especialmente formulado para motores marinos turboalimentados. Contiene inhibidores de corrosión, oxidación, herrumbre y antiespumantes. Capacidad detergente, reduce los depósitos en válvulas y pistones. Excelentes cualidades dispersantes antilodos.

QUALITY LEVELS
API CI-4/SL
ACEA E7
Caterpillar ECF-1[a]
Cummins CES 20071/72/76/77/78
MACK EO-M+
MAN M3275
MB 228.3
MTU Level 2
Renault RLD/RLD-2
Volvo VDS-2 VDS-3

Marine multigrade oil, exceeds the SHPD performance level, especially formulated to meet the demanding requirements of 4-stroke diesel turbocharged engine manufacturers in the marine environment. Contains effective corrosion, oxidation, rust and foam inhibitors. Excellent detergent effect that reduces sediments in valves and pistons. Very good dispersion qualities that prevent sludge in cold temperatures.

REF		
REC15W40U3	5 L	3
REC15W4020L	20 L	1
REC15W4050L	50 L	1
REC15W40205L	205 L	1

Olio marino multigrado, con prestazioni oltre il livello SHPD, specificamente formulato per soddisfare le particolari esigenze dei motori diesel a 4 tempi turboalimentati in ambiente marino. Contiene efficaci inibitori contro corrosione, ossidazione, ruggini e formazione di schiuma. Eccelente capacità detergente, riduce i depositi in valvole e pistoni. Ottime qualità disperdenti che impediscono la formazione di fanghi a freddo.

Huile multigrade marine, dépasse les niveaux de performances SHPD, spécialement conçu pour les moteurs diesel 4T avec turbo.
Contient des inhibiteurs contre la corrosion, l'oxydation, antirouille et anti-mousse. Évite les dommages dans les chemises, habituel sur les moteurs suralimentés de haute puissance. Haute qualité dispersante pour empêcher l'apparition de boue dans le moteur.



RECLUBE by RECMAR

ACEITE MOTORES DIESEL
DIESEL ENGINES OIL
OLIO MOTORE DIESEL
HUILE MOTEUR DIESEL

REF	OEM		
RM92-8M0096794U3	92-8M0096794	3,8 L	3

QUICKSILVER



DIESEL

ACEITE MINERALES VDS-3 | VDS-3 MINERAL GEAR OILS | OLIO MINERALE VDS-3 | HUILE MINÉRALE VDS-3

VDS-3 cubre los requisitos más estrictos sobre la limpieza del pistón en comparación con VDS-2, lo que garantiza la durabilidad y fiabilidad de los motores. La alta calidad del aceite VDS-3 permite un aumento en los intervalos de drenaje. Para motores diesel y de gasolina (ver manuales de los operadores).

VDS-3 covers even more stringent requirements on piston cleanliness and bore polish compared to VDS-2, ensuring the durability and reliability of the engines. The high quality of VDS-3 oil allows in certain cases an increase in drain intervals. Fits both diesel and gas engines (check operators manuals).

VDS-3 copre requisiti ancora più stringenti sulla pulizia del pistone e sulla lucidatura del foro rispetto a VDS-2, garantendo la durata e l'affidabilità dei motori. L'alta qualità dell'olio VDS-3 consente un aumento degli intervalli di scarico. Adatto sia ai motori diesel che a quelli a gas (consultare i manuali degli operatori).

Le VDS-3 couvre les exigences les plus strictes en matière de nettoyage des pistons par rapport au VDS-2, ce qui garantit la durabilité et la fiabilité des moteurs. La haute qualité de l'huile VDS-3 permet une augmentation des intervalles de vidange. Pour les moteurs diesel et essence (voir les manuels d'utilisation).

REF	OEM		
REC22479638	22479638	1 L	API CI-4 ACEA E5
REC22479642	22479642	5 L	

VOLVO PENTA



SAE 25W40

ACEITE SINTÉTICO 4T | 4 STROKES SYNTHETIC OIL | OLIO SINTETICO 4 TEMPI | HUILE SYNTHÉTIQUE 4T

Lubricante sintético para motores con cargas y RPM elevadas. Excelentes inhibidores de corrosión, oxidación y desgaste. Buenas propiedades de arranque en frío, antiespumantes incorporados.

Synthetic oil for 4-stroke engines suitable for engines with high RPM and heavy loads. Lubrication of all engine components, great anti-corrosion, anti-oxidation and anti-wear properties. Good performance in cold conditions. Keeps the engine clean and increases protection against corrosion in saline water environments.

Olio sintetico per motori a 4 tempi, adatto a motori con elevati RPM e carichi pesanti. Lubrificazione di tutti i componenti del motore, elevate proprietà anticorrosione, antiossidazione e antiusura. Buone proprietà di avvio a freddo.

Huile synthétique pour des moteurs 4T adapté aux moteurs avec des hauts RPM. Grande capacité anti-corrosion, anti-oxydation et contre l'usure. Propriétés adéquates pour un démarrage à froid. Elle maintient la propreté du moteur et augmente la protection face à la corrosion du à l' environnement salin.

QUALITY LEVELS
NMMA FC13101T
(NMMA, National Marine Manufacturers Association)
API SJ/SG

REF		
REC25W40U6	1 L	6
REC25W40U3	5 L	3
REC25W40205L	205 L	1

RECLUBE by RECMAR



ACEITE SINTÉTICO PARA MOTORES VERADO | SYNTHETIC OIL FOR VERADO ENGINES | OLIO SINTETICO PER MOTORI VERADO | HUILE SYNTHÉTIQUE POUR VERADO

REF	OEM		
RM92-8M0086227U3	92-8M0086227	4 L	3
RM92-8M0086226U6	92-8M0086227	1 L	6

QUICKSILVER



ACEITE MOTORES GASOLINA | GASOLINE ENGINES OIL | OLIO MOTORE BENZINA | HUILE MOTEUR ESSENCE

REF	OEM		
RM92-8M0086224U3	92-8M0086224	3,8 L	3
RM92-8M0086223U6	92-8M0086224	1 L	6

QUICKSILVER



SAE 25W50

ACEITE SINTÉTICO 4T HIGH PERFORMANCE

Recomendado para motores fueraborda Verado y otros motores high performace.

4 STROKES SYNTHETIC OIL HIGH PERFORMANCE

Recommended for use in Verado outborads and others high-performance marine engines.

OLIO SINTETICO 4 TEMPI HIGH PERFORMANCE

Consigliato per fuoribordo Verado e altri motori ad alte prestazioni.

HUILE SYNTHÉTIQUE 4T HIGH PERFORMANCE

new

Recommandé pour les hors-bord Verado et autres moteurs hautes performances.

REF	OEM		
RM92-8M0096256U6	92-8M0096256	1 L	6
RM92-858084QE1U3	92-8M0096256	4 L	3

QUICKSILVER



SAE 75W90

ACEITE PARA TRANSMISIÓN IPS

Lubricante marino sintético GL-5 para transmisiones IPS y reductoras. Soporta elevadas temperaturas internas sin descomponerse así como cargas considerables sin causar desgaste. Excelente protección a cualquier temperatura.

OIL FOR IPS TRANSMISSION

GL-5 synthetic oil of the highest quality for marine drives and IPS transmissions. It can also withstand very high temperatures without breaking down. Withstands heavy loads preventing wear.

OLIO PER TRASMISSIONE IPS

Olio sintetico GL-5 di altissima qualità per s-drive, trasmissioni IPS e riduttori. In quanto olio sintetico, garantisce un'eccellente protezione a basse ed elevate temperature. Può inoltre sostenere altissime temperature senza decomporsi. Sostiene carichi considerevoli senza provocare usura.

HUILE SYNTHETIQUE POUR TRANSMISSIONS

Huile synthétique GL-5 de haute qualité pour transmissions IPS, SX etc... En tant qu'huile synthétique, elle garantit une excellente protection à basses et hautes températures. Elle peut également résister à des températures très élevées sans se détériorer. Elle supporte des charges considérables sans provoquer d'usure.

QUALITY LEVELS
API GL-5

REF		
REC75W90U6	1 L	6
REC75W90U3	5 L	3
REC75W9020L	20 L	1
REC75W90205L	205L	1

RECLUBE by RECMAR



Aceite de transmisión marina de alto rendimiento diseñado para proporcionar la máxima protección para las colas Volvo Penta IPS y Aquamatic. Específicamente formulado para ofrecer un excelente rendimiento bajo cargas y temperaturas extremas a la vez que proporciona propiedades de fricción equilibradas entre agarre y deslizamiento y máxima protección contra el desgaste y la corrosión. La tecnología avanzada de los aditivos incluye una capacidad única para minimizar el daño debido a la contaminación del agua.

High performance marine transmission oil designed to provide maximun protection for Volvo Penta IPS and Aquamatic sterndrives. Specifically formulated to offer excellent performance under extreme loads and tempertaures while providing balanced frictional properties between grip and slip and maximum protection against wear and corrosion. Advanced additive technology include unique capability to minimize damage due to water contamination.

Olio per trasmissioni marine ad alte prestazioni progettato per fornire la massima protezione per Volvo Penta IPS e entrofuoribordo Aquamatic. Specificamente formulato per offrire prestazioni eccellenti in presenza di carichi e temperature estreme, fornendo al tempo stesso proprietà di attrito bilanciate tra aderenza e scivolamento e massima protezione contro l'usura e la corrosione. La tecnologia additiva avanzata include la capacità unica di minimizzare i danni dovuti alla contaminazione dell'acqua.

Huile de transmission marine haute performance conçue pour fournir une protection maximale pour les IPS et les embases Aquamatic, en présence de charges et de températures extrêmes, tout en offrant des propriétés de friction équilibrées entre l'adhérence et le glissement et une protection maximale contre l'usure et la corrosion. La technologie additive avancée comprend la capacité unique de minimiser les dommages dus à la contamination de l'eau.

REF	OEM	
REC22479650	22479650	1 L
REC22479648	22479648	5 L

VOLVO PENTA



RECAMBIOS MARINOS

SAE 75W140

ACEITE PARA TRANSMISIÓN

Lubricante marino de alto rendimiento para transmisiones. Excelentes prestaciones que evitan el desgaste y presiones extremas, la temperatura ambiente y condiciones de trabajo no alteran su capacidad lubricante.

QUALITY LEVELS
API GL-5
API MT-1
ARVIN MERITOR 0-76-M
Mack GO-J
MIL-PRF-2105E
SAE J2360
Scania STO 1:0 - 2:0A
ZF TE-ML 05A - 07A - 12N - 16F - 19C – 21A

REF		
REC75W140U3	5 L	3

OIL FOR TRANSMISSION

High performance oil designed for marine transmissions. Excellent performance that prevents wear and extreme pressure, providing maximum protection to the transmission; temperatures and working conditions do not alter its lubricating effect.



OLIO PER TRASMISSIONE

Olio ad alto rendimento per trasmissioni nautiche. Eccellenti prestazioni che evitano usura e pressioni estreme, garantendo la massima protezione della trasmissione; la temperatura ambiente e le condizioni di lavoro non ne modificano le proprietà lubrificanti. Temperatura e rumore ridotti grazie alla riduzione dell'attrito.

HUILE SYNTHETIQUE POUR TRANSMISSIONS

Huile haute performance pour embase DP-G, DPH 1.59/1 qui évite l'usure et les pressions extrêmes, assurant une protection maximale de la transmission; la température ambiante et les conditions de travail ne modifient pas leurs propriétés lubrifiantes. Température et bruit réduits grâce à la réduction des frottements.

RECLUBE by RECMAR

ACEITE PARA TRANSMISIÓN IPS/ AQUAMATIC

Aceite de transmisión marina de alto rendimiento diseñado para proporcionar la máxima protección para las colas Volvo Penta IPS y Aquamatic. Específicamente formulado para ofrecer un excelente rendimiento bajo cargas y temperaturas extremas a la vez que proporciona propiedades de fricción equilibradas entre agarre y deslizamiento y máxima protección contra el desgaste y la corrosión. La tecnología avanzada de los aditivos incluye una capacidad única para minimizar el daño debido a la contaminación del agua.

DHP (ratio 1.59:1 (D6-400)
DPG (KAD300)

REF	OEM	
REC22574246	22574246	5 L

VOLVO PENTA

OIL FOR IPS / AQUAMATIC TRANSMISSION

High performance marine transmission oil designed to provide maximun protection for Volvo Penta IPS and Aquamatic sterndrives. Specifically formulated to offer excellent performance under extreme loads and tempertaures while providing balanced frictional properties between grip and slip and maximum protection against wear and corrosion. Advanced additive technology include unique capability to minimize damage due to water contamination.
.



OLIO PER TRASMISSIONE IPS/ AQUAMATIC

Olio per trasmissioni marine ad alte prestazioni progettato per fornire la massima protezione per Volvo Penta IPS e entrofuoribordo Aquamatic. Specificamente formulato per offrire prestazioni eccellenti in presenza di carichi e temperature estreme, fornendo al tempo stesso proprietà di attrito bilanciate tra aderenza e scivolamento e massima protezione contro l'usura e la corrosione. La tecnologia additiva avanzata include la capacità unica di minimizzare i danni dovuti alla contaminazione dell'acqua..

HUILE POUR TRANSMISSION IPS/AQUAMATIC

Huile de transmission marine haute performance conçue pour fournir une protection maximale pour les embases DP-G, DPH 1.59/1. Formulé spécifiquement pour offrir d'excellentes performances en présence de charges et de températures extrêmes, tout en offrant des propriétés de friction équilibrées entre l'adhérence et le glissement et une protection maximale contre l'usure et la corrosion. La technologie additive avancée comprend la capacité unique de minimiser les dommages dus à la contamination de l'eau.

SAE 80W90

ACEITE SINTÉTICO PARA TRANSMISIÓN

Lubricante marino para transmisones de motores intraborda y fueraborda de los principales fabricantes, que requieren aceites con una calidad API GL 5. Consulte el manual de usuario antes de elegir el lubricante.

QUALITY LEVELS
API GL-5

REF		
REC80W90U6	1 L	6
REC80W90U3	5 L	3
REC80W9017L	17L	1

RECLUBE by RECMAR

SYNTHETIC OIL FOR TRANSMISSION

GL-5 synthetic oil of the highest quality for marine drives and IPS Oil recommended for the transmission of inboard and outboard engines of the main manufacturers that require API GL 5 quality oils. Read the user manual before choosing a lubricant.



OLIO SINTETICO PER TRASMISSIONE

Olio sintetico GL-5 di altissima qualità per s-drive, trasmissioni IPS e riduttori. Olio consigliato per trasmissioni entrobordo e fuoribordo dai principali produttori che richiedono oli di qualità API GL 5. Consultare il manuale d'uso prima di scegliere il lubrificante.

HUILE SYNTHETIQUE POUR TRANSMISSIONS

Huile synthétique GL-5 de la plus haute qualité pour les transmissions marines et IPS Oil recommandée pour la transmission des moteurs in-bord et hors-bord des principaux fabricants qui nécessitent des huiles de qualité API GL 5. Lisez le manuel d'utilisation avant de choisir un lubrifiant.

Las propiedades de lubricación protegen el accionamiento y la transmisión incluso bajo cargas pesadas. También proporciona una excelente protección contra la corrosión. Soporta altas temperaturas sin romperse.

Lubrication properties protect drive and transmission even under heavy load. Also provides excellent corrosion protection. Withstands high temperatures without breaking down.

Le proprietà di lubrificazione proteggono l'azione e la trasmissione anche sotto carico pesante. Offre inoltre un'eccellente protezione dalla corrosione. Resiste alle alte temperature senza rompersi.

Protège l'embase et la transmission grâce à ses propriétés lubrifiantes même en cas de charge élevées. Offre une excellente protection contre la corrosion. Supporte les températures élevées sans se décomposer.

REF	OEM		GRADO GRADE GRADE GRADE
REC85122800	85122800	1 L	API GL-5
REC3809445	3809445	5 L	

VOLVO PENTA



ACEITE MINERALES / MINERAL GEAR OILS / OLIO MINERALE / HUILE MINÉRALE

Para colas de transmisión mecánica. Especialmente indicados para los motores de gran cilindrada o de uso frecuente.
Fabricado con aditivos especiales para proveer una máxima durabilidad e inhibidores de la corrosión para una mayor protección contra el óxido y la corrosión.

Lower Unit Gear Lube for mechanical drives. Lower Unit Gear Lube. Ideal for modern outboard and stern drive lower units.
Will not avoid manufacturers' warranties.

Per piedi poppieri a trasmissione meccanica. Indicato specialmente per motori di grande cilindrata o di uso frequente.
Fabbricato con additivi speciali per fornire una massima durata e impedire la corrosione per una maggiore protezione contro l'ossidazione e la corrosione.

Pour les embases mécanique. Particulièrement adapté pour les moteurs de grande cylindrée ou à usage fréquent.
Fabriqué avec des additifs spéciaux pour offrir une durabilité maximale et des inhibiteurs de corrosion pour une meilleure protection contre la rouille et la corrosion.

REF		
LUB11552U12	1 L	12

LubriMatic



SAE 90

ACEITE HIGH PERFORMANCE / HIGH-PERF GEAR LUBE / OLIO HIGH PERFORMANCE / HUILE HIGH PERFORMANCE

Aceite sintético de altas prestaciones. Para colas de transmisión mecánica.

High performance synthetic Lower Unit Gear Lube for mechanical drives.

Olio sintetico di alta prestazione. Per piedi poppieri a trasmissione meccanica.

Huile synthétique haute performance. Pour transmissions mécanique.

REF	OEM		
RM92-858064QB1U6	92-858064QB1	1 L	6
RM92-858065QB1U2	92-858065QB1	9,5 L	2

QUICKSILVER



RM92-858064QB1U6



RM92-858065QB1U2

REF	OEM		
RM92-8M0121960U12	90-8M0121960	137 ml	12

QUICKSILVER



new

ISO46

ACEITE HIDRÁULICO ISO46

Fluidos microfiltrados de alta calidad para presiones extremas.
indicado para sistemas hidráulicos como pasarelas, tenderlift, grúas, etc.

HYDRAULIC OIL ISO46

High quality micro-filtered fluids for sextreme pressure.
Suitable for hydraulic systems such as gangways, tenderlifts, cranes, etc.

OLIO IDRAULICO ISO46

Fluidi microfiltrati di alta qualità per pressioni estreme.
Adatto per sistemi idraulici come passerelle, tender lift, gru, ecc.

HUILE HYDRAULIQUE ISO46

Fluides microfiltrés de haute qualité pour une pression extrême.
Convient aux systèmes hydrauliques tels que les passerelles, les monte-charges, les grues, etc.

new

REF		
RECISO46U3	5 L	3
RECISO46U6	1 L	6

RECLUBE by RECMAR



ATF

TRANSMISIÓN AUTOMATICA

Fluido hidráulico marino sintético tipo ATF. Especialmente indicado para transmisiones automáticas, servomecanismos y direcciones asistida.
Formula sintética de elevada viscosidad, incorpora anticorrosivos y antiespumantes.

AUTOMATIC TRANSMISSION

ATF synthetic hydraulic fluid.
Especially suited for automatic transmissions, servo-devices, power-assisted steering.
Provides a smooth performance without transmission knocks. Provides high protection against corrosion and excellent fluidity at low temperatures. Prevents foaming and provides rubber seal stability.

TRASMISSIONE AUTOMATICA

Fuido idraulico sintetico di tipo ATF. Specificamente indicato per trasmissioni automatiche, servomeccanismi, servotimoni. Alta capacità antiusura, per prolungare la vita utile dei meccanismi. Garantisce un funzionamento fluido e senza scatti della trasmissione. Alta protezione contro la corrosione ed eccellente fluiddità a basse temperature. Bassa formazione di schiuma e stabilità in presenza di guarnizioni di gomma.

HUILE HYDRAULIQUE DEXRON III

Fluide hydraulique synthétique de type ATF. Spécifiquement indiqué pour les transmissions automatiques, servomécanismes et aux directions hydrauliques. Haute capacité anti-usure, pour prolonger la durée de vie des mécanismes. Elle assure un fonctionnement fluide de la transmission. Haute protection contre la corrosion et excellente fluidité à basses températures. Faible moussage. N'abime pas les joints en caoutchouc.

QUALITY LEVELS
GM DEXRON IIIG / IID-IIE
FORD MERCON
ALLISON C-4 TES-228, TES 389
MB 236.9 – MB 236.5
ZF TE-ML 02F/03D/04D/05L/09/11A/17C/21L
Caterpillar TO-2
Man 339 TYPE V1/Z1
Voith 55.6336 XXX
VOLVO STD 1273.40/127.341
FORD SQM9010B / M2C138CJ -M2C166H - M2C185A

REF		
RECATFU3	5 L	3
RECATFU6	1 L	6



RECLUBE by RECMAR

RECAMBIOS MARINOS

ACEITE PARA TRANSMISIÓN DEXRON III / OIL FOR TRANSMISSION DEXRON III / OLIO PER TRASMISSIONE DEXRON III / HUILE POUR TRANSMISSION DEXRON III

Protege contra el desgaste, incluso a altas temperaturas. También proporciona muy buena protección contra la corrosión.
NO DEBE USARSE DONDE SE RECOMIENDA API-GL5

Protects against wear, even at high temperatures. Also provides a very good corrosion protection.
MUST NOT BE USED WHERE API-GL5 IS RECOMMENDED

Protegge dall'usura, sempre ad alte temperature. Fornisce anche un'ottima protezione contro la corrosione.
NON DEVE ESSERE UTILIZZATO DOVE VIENE RACCOMANDATO API-GL5

Elle protège contre l'usure, même à des températures élevées. Elle offre également une excellente protection contre la corrosion.
ELLE NE DOIT JAMAIS ÊTRE UTILISÉ LORSQUE L'API-GL5 EST RECOMMANDÉ

REF	OEM	
REC1161995	1161995	5 L

VOLVO PENTA



TC-W3

ACEITE MINERAL FUERABORDAS / 2-CYCLE OIL / OLIO MINERALE PER FUORIBORDO / HUILE MINERAL POUR HORS-BORD

El nuevo aceite anticarbonilla TC-W3 supera todos los requerimientos de garantía que los fabricantes de motores exigen. Utilize el TC-W3 para obtener mayor potencia en su motor. Provee de una mayor protección contra la carbonilla en los pistones, el resecamiento de los aros, el fallo de las bujías en el arranque y del óxido. Recomendado para los sistemas de inyección de aceite.

Formulated from ultra-clean base stock oil to provide superior protection against piston scuffing, bearing wear, spark plug fouling, pre-ignition and rust. This formulation has outstanding lubricity and miscibility for better mixing of fuel and oil, resulting in a cleaner running engine. Contains no phosphorus. Recommended for oil injection systems. Outboard motor Oil.

Il nuovo olio anticarbone TC-W3 supera tutti i requisiti di garanzia che i produttori di motori esigono. Utilizare il TC-W3 per ottenere maggior potenza nel motore. Fornisce una maggiore protezione contro i residui di combustione nei pistoni, l'essicazione delle fasce, il non funzionamento delle candele nell'accensione. Raccomandato per i sistemi di iniezione ad olio.

Elle fournit une protection supérieure contre le serrage du piston, l'usure des roulements, l'encrassement des bougies d'allumage, le pré-allumage et la rouille. Elle a un pouvoir lubrifiant et une miscibilité exceptionnels pour un meilleur mélange du carburant et de l'huile, résultant d'un moteur plus propre. Recommandé pour les systèmes d'injection d'huile.

REF	OEM		
RM92-858021QB1U6	92-858021QB1	1 L	6
RM92-858022QB1U3	92-858022QB1	3,8 L	3
RM92-858023QB1U2	92-858023QB1	9,5 L	2

QUICKSILVER



RM92-858021QB1U6 RM92-858022QB1U3 RM92-858023QB1U2

VARIOS / VARIOUS / VARI / DIVERS

ACEITE COMPRESOR / COMPRESSOR OIL / OLIO COMPRESSORE / HUILE POUR COMPRESSEUR

Especialmente probado en compresores Volvo Penta. Completamente sintético, resiste temperaturas altas y bajas. Protege el compresor contra la corrosión.

Specially tested in Volvo Penta compressors. Fully synthetic oil that withstands both high and low temperatures. Protects compresssor against corrosion.

Testati appositamente con i compressori Volvo Penta. Olio completamente sintetico che resiste alle alte e alle basse temperature. Protegge il compressore dalla corrosione.

Spécialement testé avec les compresseurs Volvo. Huile entièrement synthétique qui résiste aux températures élevées et basses. Protège le compresseur de la corrosion.

REF	OEM		VISCOSIDAD / VISCOSITY / VISCOSITA / VISCOSITE
RM85108974	85108974	250 ml	ISO VG 68

VOLVO PENTA



ACEITE TRIM / TILT — POWER TRIM & TILT FLUID — OLIO TRIM / TILT — HUILE TRIM / TILT

REF		
RM92-858074QB1U12	240 ml	12

QUICKSILVER



GRASA MARINA — MARINE GREASE — GRASSO MARINO — GRAISSE MARINE

GRASA MARINA. INSOLUBLE AL AGUA

Grasa marina semisintética con base de litio-calcio, de cuerpo espeso y color azul.
100% insoluble al agua, especialmente formulada para todo tipo de aplicaciones náuticas incluso prensaestopas y hélices plegables, gracias a la buena adhesión al metal.

MARINE GREASE. NON-WATER-SOLUBLE

Semi-synthetic marine grease with a lithium and calcium base, thick and blue.
100% non-water-soluble, especially formulated for all nautical uses, including cable glands and foldable propellers, thanks to good adherence to metal.

GRASSO MARINO. INSOLUBILE IN ACQUA

Grasso marino semisintetico a base di litio-calcio, di aspetto denso e di colore azzurro. 100% insolubile in acqua, specificamente formulato per applicazioni nautiche di tutti i tipi, compresi premistoppa ed eliche pieghevoli, grazie all'alta aderenza ai metalli.

GRAISSE MARINE INSOLUBLE DANS L'EAU

Graisse marine semi-synthétique à base de lithium-calcium, d'apparence dense et de couleur bleu clair. 100% insoluble dans l'eau, spécialement formulé pour tous les types d'applications nautiques, y compris les presse-étoupe et les hélices repliables, grâce à leur forte adhérence aux métaux.

REF		
RECGREU1	5 kg	1
RECGREU12	400 g	12

RECLUBE by RECMAR



RECGREU12 RECGREU1

GRASA MARINA — MARINE GREASE — GRASSO MARINO — GRAISSE MARINE

Lubricante insoluble al agua, ideal para aplicaciones marinas. Excelente protección contra fricciones, óxido y corrosión.

Special calcium sulfonate complex, water insoluble formula ideal for marine applications.
Provides excellent corrosion protection under severe conditions caused by salt water and air.

Lubrificante insolubile all'acqua, ideale per applicazioni marine. Eccellente protezione contro l'attrito, l'ossido e la corrosione.

Graisse insoluble dans l'eau, idéal pour les applications marines. Excellente protection contre le frottement, l'oxyde et la corrosion dans des conditions sévères causées par l'eau salée et l'air..

REF		PISTOLA GUN PISTOLA PISTOLET	
LUB11400	85g	RECT30190	3
LUB11402	400 g		1

lubriMatic



LUB11400 LUB11402

REF		
RM92-8M0133989U6	280 g	6
RM92-8M0133985U4	450 g	4

QUICKSILVER



RM92-8M0133985U4



RM92-8M0133989U6

GRASA DE LITIO — LITHIUM GREASE — GRASSO AL LITIO — GRAISSE AU LITHIUM

Grasa de litio con Teflón. Color blanco.

Heavy duty white litium grease with Teflon.

Grasso al litio con Teflón. Colore bianco.

Graisse au lithium avec du Teflón. Couleur blanche.

REF	
LUB11363	350 ml

lubriMatic



HERRAMIENTAS PARA GRASA | GREASE TOOLS | ATTREZZI PER GRASSO | OUTILS POUR GRAISSE

PISTOLA DE GRASA | LEVER GREASE GUN | PISTOLE GRASSO | POMPE A GRAISSE

Incluye manguera curvada y conector standard.
Ideal para engrasar crucetas, cables de dirección, cañas de motor fuerborda, piñones y cualquier otra parte del motor que precise engrase.
Con visor para reserva. Se recarga sin necesidad de tubo.

Standard Lever grease gun.
Includes curved pipe and std coupler.
Ideal for greasing spreaders, steering wires, rods outboard engine, gear bearing and other parts of the engine that needs greasing.
With Viewer for reservation.
Will reload without tube.

Include tubo flessibile curvo e connettore standard.
Ideale per ingrassare cavi dello sterzo, barre del motore fuoribordo, ingranaggi e qualsiasi altra parte del motore che abbia bisogno di lubrificazione.
Con visora per la prenotazione.
Si ricarica senza tubo.

Comprend un tuyau incurvé et un connecteur standard.
Idéal pour graisser les traverses, les câbles de direction, les tiges de moteur entraîné, les pignons et toute autre partie du moteur qui a besoin d'être graissée.
Avec viseur pour réservation. Il se recharge sans tube.

REF			
RECT30201	600 cc	16000 psi	
LUB10212			30 cm

RECMAR



LUB10212



RECT30201

Pistola para tubos de grasa. Incluye manguera flexible de 14 cm y adaptador standard.

All purpose gun operates handy squeeze tubes. Includes 2-11/16" pipe and plastic push-type coupler.

Pistola per tubi di grasso. Include tubo flessibile da 14 cm e adattatore standard.

Pistolet pour tubes de graisse. Comprend un tuyau flexible de 14 cm et un adaptateur standard.

REF
RM91-37299Q2

QUICKSILVER



BOMBA EXTRACTORA | LOWER UNIT PAIL PUMP | POMPA ESTRATTRICE | POMPE D'EXTRACTION

Bomba extractora para bidones de aceite de 17 litros. REC80W9017L. Puede acoplarse directamente a las colas. Se suministra con adaptador roscado para las colas americanas habituales.

For bulk filing of lower units and stern drives. Designed to fit 17 L on per pails.

Pompa estrattrice per bidoni d'olio da 17 litri REC80W9017L. Si può collegare direttamente ai piedi. Si vende con adattatori per i piedi poppieri abituali.

Pompe d'extraction pour bidons d'huile de 17 litres REC80W9017L. Peut être directement couplé aux embases. Fourni avec un adaptateur fileté pour les embases américaines habituelles.

REF
LUB55011

lubriMatic®



KIT PISTOLA + GRASA

Kit compuesto de una pistola pequeña y muy versátil que permite la salida del tubo conector frontal o superior. Presión máxima 300 k/cm^2.
Incluye un bloqueador para mantener el cartucho en posición y tubo de salida de 14 cm. Admite cartuchos de 3 onzas (85 g) o grasa a granel.

MIDGET GREASE GUN KIT

Marine corrosion control lubrication kit.
Small, versatile gun allows for front or top pipe placement.
Barrel takes 3 oz grease cartridge or can be bulk loaded.
Develops up to 4,500 psi.

KIT PISTOLA + GRASSO

Kit composto da una pistola piccola e molto versatile che permette l'uscita del grasso dal tubo frontale o superiore. Pressione massima 300 k/cm^2.
Include un blocco per tenere la cartuccia in posizione, il tubo è da 14 cm.
Utilizza cartuccia da 85 gr o grasso sfuso.

KIT PISTOLET + GRAISSE

Kit composé d'un petit pistolet très polyvalent qui permet la sortie du tube de connexion avant ou supérieur. Pression maximale 300 k / cm2.
Il comprend un bloqueur pour maintenir la cartouche en position et un tube de sortie de 14 cm. Prend en charge des cartouches de 3 oz (85 g) ou de la graisse en vrac.



REF
RECT30190

RECMAR

PISTOLA DE ACEITE

Pistola para acoplar en los envases de botella de 1 litro de LUB11552 y LUB11564. Se suministra con kit de adaptación con válvula anti-retorno.

BOTTLE GREASE PUMP

Lower unit quart pump. Complete with metal threaded filler fitting.

PISTOLA OLIO

Pistola da accoppiare a bottiglie da 1 L LUB11552 e LUB11564. Si vende con kit di accoppiamento con valvola anti-ritorno.

POMPE POUR HUILE

Pompe pour les bidons de 1 litre de LUB11552 et LUB11564. Livré avec kit d'adaptation avec clapet anti-retour.

RECMAR



REC55133M



REC55133S





REF				
REC55005	Pistola de aceite	Bottle grease pump	Pistola olio	Pompe pour huile
REC55133M	Adaptador métrico (⃠ Suzuki)	Metric adaptor (⃠ Suzuki)	Adattatore metrico (⃠ Suzuki)	Adaptateur métrique (⃠ Suzuki)
REC55133S	Adaptador para Suzuki	Adaptor for Suzuki	Adattatore per Suzuki	Adaptateur Suzuki

ADAPTADOR PARA EMBASES RECLUBE

Para la pistola de aceite REC55005.

ADAPTOR FOR RECLUBE CONTAINERS

For REC55005 bottle grease pump.

ADATTATORE PER CONTENITORI RECLUBE

Per pistola olio REC55005.

ADAPTATEUR POUR LES BIDONS DE 5L RECLUBE

Pour le pistolet REC55005.

REF
REC55006



ACCESORIOS Y HERRAMIENTAS DE INSTALACIÓN · ACCESSORIES AND INSTALATION TOOLS · ACCESSORI E ATTREZZI ISTALAZIONE · ACCESSOIRES ET OUTILS D'INSTALLATION

BOMBA DEPÓSITO · GREASECASE FILLER · POMPA OLIO · POMPE DE REMPLISSAGE

Para llenado de colas.
Con válvula de ventilación para evitar derrames.

With check valve venting system to avoid overflow

Per mettere l'olio nei piedi poppier.
Con valvola di sfiatto per evitare fuoriuscite.

Pour le remplissage des embases. Avec valve de ventilation pour éviter les déversements.

REF				
REC55133GF	Bomba depósito	Greasecase filler	Pompa olio	Pompe de remplissage
REC55133M	Adaptador métrico (⃠ Suzuki)	Metric adaptor (⃠ Suzuki)	Adattatore metrico (⃠ Suzuki)	Adaptateur métrique (⃠ Suzuki)
REC55133S	Adaptador para Suzuki	Adaptor for Suzuki	Adattatore per Suzuki	Adaptateur Suzuki

RECMAR



REC55133M REC55133S



KIT CAMBIO DE ACEITE · OIL CHANGE KIT · KIT CAMBIOE OLIO · KIT VIDANGE D'HUILE

Bomba reversible, para cambio de aceite instalada sobre un bidón portátil de13 l con mangueras de extracción y 2,5 m de cable eléctrico con pinzas.

Reversible pump kit for oil change, winterizing and liquid transfer. Hose kit and 3,5 gal. storage container.

Pompa reversibile, per cambio dell'olio installata sopra un bidone portatile da 13 lt con tubo di estrazione e 2,5 m di cavo elettrico con pinze.

Pompe réversible pour vidange d'huile installée au-dessus d'un sceau portable de 13 litres avec tube d'extraction et 2,5 m de câble électrique avec pince pour batterie

REF			
SH8050-305-426	14,1 l/min	12 V (4,7 A)	403 x 318 mm

SHURflo



BOMBA DE ACEITE MANUAL · MANUAL OIL PUMP · POMPA DELL'OLIO MANUALE · POMPE DE VIDANGE D'HUILE MANUELLE

Incluye 3 tubos de Ø 9.8, 6.7 y 5.8 mm.
Temperatura máxima 100ºC.
Cuando está lleno se para automáticamente.

With 3 tubes: Ø 9.8, 6.7 & 5.8 mm.
Maximum temperature 100 ºC. When full it automatically stops.

Include tubi da: Ø 9.8, 6.7 e 5.8 mm.
Temperatura massima 100 ºC.
Quando pieno arresta automaticamente

Inclus les tubes Ø 9.8, 6.7 e 5.8 mm.
Temperature max 100 ºC.
Arrêt automatique quand elle est pleine

REF		KG	
GS20080	4 L	2.1 kg	496 x 204 mm
GS20081	6 L	2.4 kg	648 x 204 mm
GS20082	18 L	4.9 kg	700 x 350 mm

OILBOX



GS20080



GS20081



GS20082



REF	
GS20084	7 L
GS20085	9 L

GOLDENSHIP



GS20085

GS20084

Cuerpo de PVC y latón.
Tubos de nylon flexible.

Made of solid brass and PVC.

Corpo in PVC e ottone.
Tubo in nylon flessibile.

Corps en PVC et laiton.
Tuyau en nylon flexible.

REF
GS20151

GOLDENSHIP



Bomba extractora o trasvase de líquidos. Se acopla a los taladros eléctricos con portabrocas de 6 mm. Incluye manguera y tubo para aceite.

Ideal for pumping water or oils. Includes 2,4 m hose. Drill shaft: 6 mm.

Pompa estrattrice o per travaso di liquidi. Include tubo da 2,4m.

Pompe d'extraction ou transfert de liquide. Se fixe aux perceuses électriques avec mandrin de 6 mm. Comprend un tuyau et un tube pour l'huile. 2,4m.

REF		
SH3010-000	760 l/h	200GPH

SHURflo



KI ENGRASADORES MÉTRICOS

METRIC GREASE FITTINGS

KIT LUBRIFICATORI METRICI

KIT GRAISSEURS MÉTRIQUES

REF	0º	45º	90º	
LUB11957	4	2	2	M6x1

lubriMatic



REF	90º	
RECT11958	4	M6x1

RECMAR



KIT EXTRACTOR DE POLEAS

PULLER TOOL KIT

KIT ESTRATTORE PULEGGE

KIT EXTRACTEUR DE POULIES

Extractor de polea contrapesos. Contiene 5 juegos de tornillos de diferentes medidas.

Harmonic ballancer puller. 5 sets of screws are provided.

Estrattore di pulegge. Contiene 5 kit di viti di differenti misure.

kit d'outils facilitant l'extraction, de volants magnétiques, de volants de direction, de poulies et d'engrenages à trous taraudés.

REF
SSP4600

RECMAR





Kit para extraer e instalar poleas.
Para uso en todos los motores Ford, GM y Chrysler.
También puede utilizarse para volantes de dirección y poleas en general.
Esfuerzo máximo recomendado: 20 kg.

Harmonic ballancer puller and installation tool kit. Use on all Ford, GM & Chrysler engines.
Heavy duty tool.
Can also be used for steering wheels and pulleys

Kit per estrarre e installare pulegge in tutti i motori Ford, GM e Chrysler.
Si può utilizzare per volani di direzione e pulegge in generale.
Carico massimo: 20 kg.

Kit extracteur de balancier harmonique et trousse d'outils d'installation. A utiliser sur tous les moteurs Ford, GM et Chrysler.
Outil robuste. Peut également être utilisé pour les volants et les poulies
Charge maximale:20kg.

REF
SSPHBP100K

RECMAR



EXTRACTOR FILTROS / OIL FILTER WRENCH / ESTRATTORE FILTRI / CLE A FILTRES

REF	
REC70720	65 - 110 mm

RECMAR

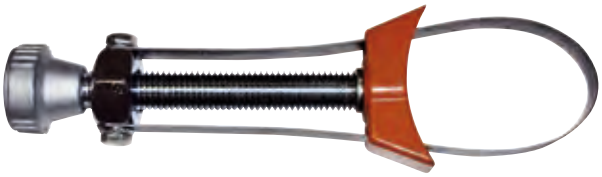

JUEGO DE MACHOS / TAP AND DIE SET / FILIERA / JEU DE TARAUDS ET FILIERES

Garantía de por vida.

Lifetime warranty.

Garantita a vita.

Garantie à vie.

REF	
CRA952343	Pulgadas Inches Pollici Pouces

RECMAR



LLAVE DINAMOMÉTRICA / TORQUE WRENCH / CHIAVE DINAMOMETRICA / CLE DYNAMOMETRIQUE

Con escala en 20 - 150 pies/libras y 33.9 - 210 N.m
Incrementos cada 1 pie/libra y 1,4 N.m
Dado de conexión: 1/2"

Scale in 20-150 ft-lbs. 33.9 - 210 N.m
Increases each 1 ft-lbs. & 1,4 N.m
1/2" drive.

Con scala da 20 - 150 piedi /libra e 33.9 - 210 N.m
Incremento di 1 pie / libra e 1,4 N.m
Dado attacco: 1/2"

Avec échelle de 20 à 150 pieds / livre et 33,9 à 210 N.m
Augmentation de 1 pied / livre et 1,4 N.m
Embout de connexion: 1/2 "

REF	
CRA944595	518 x 35 x40 mm

RECMAR



FONENDOSCOPIO / SPARK GAP TESTER / FONENDOSCOPIO / PHONENDOSCOPE

Instrumento de precisión, resistente a golpes, detecta fácilmente ruidos en motores, cojinetes y otras partes móbiles. Incluye varilla de test, trompeta y auriculares.

Sensitive, shockproof instrument, easily locates noises in engines bearings and other moving parts. Includes aluminium alloy probe / needle, surgical PVC, rubber trumpet and plastic earphones.

Strumento di precisione, resistente a colpi, rileva facilmente rumori nel motore, nei cuscinetti e altre parti mobili. Include la tromba e gli auricolari.

Instrument de précision, résistant aux chocs, détecte facilement le bruit dans les moteurs, roulements et autres pièces mobiles. Comprend une tige d'essai, une trompette et des écouteurs.

REF
REC91-00003

RECMAR



OREJERAS REDONDAS | MOTOR FLUSHER ROUND | CUFFIE LAVAGGIO ROTONDE | OREILLES DE RINÇAGE RONDES

Tomas de agua para refrigeración de motores fueraborda y colas intra-fueraborda.

For use on most outboards and inboard/outboards engines with side water inlets.

Cuffie lavaggio per motori entro-fuoribordo e fuoribordo.

Sorties d'eau pour le refroidissement du moteur hors-bord et in-bord.

GOLDENSHIP

REF	
GS30350	1



USO PROFESIONAL
PROFESSIONAL
USO PROFESSIONALE
USAGE PROFESSIONNEL

REF	
GS30351	1



OREJERAS CUADRADAS | MOTOR FLUSHER SQUARE | CUFFIE LAVAGGIO QUADRATE | OREILLES DE RINÇAGE CARRÉES

Tomas de agua para refrigeración de motores fueraborda y colas intra-fueraborda.

For use on most outboards and inboard/outboards engines with side water inlets.

Cuffie lavaggio per motori entro-fuoribordo e fuoribordo.

Sorties d'eau pour le refroidissement du moteur hors-bord et in-bord.

GOLDENSHIP

REF	
GS30352	1



USO PROFESIONAL
PROFESSIONAL
USO PROFESSIONALE
USAGE PROFESSIONNEL

REF	
GS30353	1

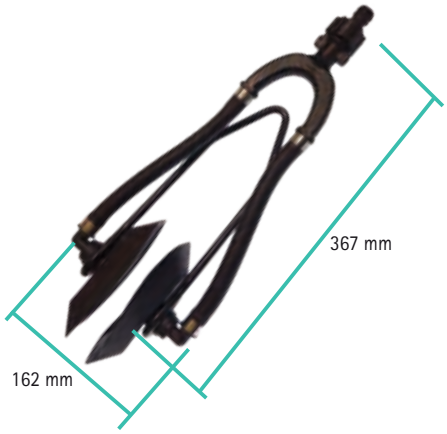

EXTRACTOR IMPULSORES | IMPELLER REMOVAL | ESTRATTORE GIRANTE | EXTRACTEUR DE TURBINE

Extractor para impulsores flexibles de bombas, motores fueraborda e interiores.

Flexible impeller removal tool, suitable for all marine flexible impellers of water pumps, outboard and inboard engines.

Estrattore per giranti di pompe di motori fuoribordo e entrobordo.

Extracteur pour turbines flexibles, moteurs hors-bord et in-bord.

REF	
GS20198	Ø 65 mm 2-1/2"
GS20199	Ø 77 - 127 mm Ø 3" - 5"

GOLDENSHIP



LLAVE FRENO VOLANTE PARA FUERABORDAS | FLYWHEEL HOLDER PER OUTBOARDS | CHIAVE FRENO VOLANTE PER FUORIBORDO | CLÉ FREIN DE VOLANT POUR HORS-BORD

REF
REC5515100

RECMAR



EXTRACTOR COJINETES Y HÉLICES / PROP AND BEARING PULLER / ESTRATTORE CUSCINETTI E ELICHE / EXTRACTEUR DE ROULEMENT ET D'HELICE

Extractor de cojinetes y hélices, con patas. Para todos los cojinetes Mercruiser y la mayoría de las hélices.

Prop and bearing carrier puller. For Mercruiser All Style Bearing Carrier and Most Props.

Estrattore cuscinetti e eliche. Per tutti i cuscinetti Mercruiser e la maggior parte delle eliche.

Extracteur de roulements et hélices. Pour tous les roulements Mercruiser et la plupart des hélices.

REF
REC90095

RECMAR



Para hélices y cojinetes antiguos
For prop and old style bearing carrier.
Per eliche e cuscinetti vecchi.
Pour hélices et roulements anciens



Para cojinetes modernos
For new style bearing carrier.
Per cuscinetti moderni.
Pour roulements modernes



EXTRACTOR PIÑONES Y COJINETES / UNIVERSAL PULLER PLATE / ESTRATTORE PIGNONE E CUSCINETTI / EXTRACTEUR DE PIGNON ET PALIER

REF	
REC91-00001	30-50 mm 1 1/4" ~ 2 1/4"
REC91-00002	50-75 mm 2 1/4" ~ 3 1/2"
REC91-37241	75-105 mm 3" ~ 4 1/2"

RECMAR



CHISPÓMETRO / SPARK GAP TESTER / SCINTILLOMETRO / CONTRÔLEUR D'ALLUMAGE

Se puede comprobar la chispa con el motor en funcionamiento.

Good for checking spark on running engine.

Si può provare la scintilla con il motore in funzione.

L'étincelle peut être vérifiée avec le moteur en marche.

REF	CYL
REC5119766	8
REC004	1

RECMAR



REC5119766



REC004

KIT ALARGADOR CABLE BUJÍAS / EXTENSION WIRES / KIT PROLUNGA CAVI CANDELE / KIT EXTENSION DE FAISCEAU DE BOUGIE

REF		
REC5119902	18 cm	4
REC5119903	60 cm	4

RECMAR



REC5119902



REC5119903

KIT LLAVE HÉLICE | PROP WRENCH KIT | KIT CHIAVE ELICHA | CLE POUR ECROU D'HELICE

REF	OEM		
REC91-859046Q4	91-821887T1	1 1/16"	75 - 300 HP



FLOTANTE | FLOTATING | GALLEGIANTE | FLOTANT

new

REF	OEM		
REC91-859046Q3	91-859046Q3	15/16"	30, 40, 50 & 60 HP

RECMAR



HERRAMIENTA AROS-PISTONES | RING COMPRESOR KIT | KIT FASCE-PISTONI | KIT COLLIERS DE SERRAGE POUR SEGMENTS

Kit herramientas para la instalación de aros y pistones. Incluye 6 bandas de 7 a 11 cm.

Ring compressor kit for pistons. Includes 6 band 2-7/8" - 4-3/8"

Kit per montare le fasce dei pistoni. Include 6 bande da 7 a 11 cm.

Kit d'outils pour l'installation des segments et pistons. Il comprend 6 colliers de 7 à 11 cm.

REF
SSP4213

RECMAR



REF	
SSP4206	127 mm Ø 2-1/8" - 5" Ø
SSP4207	178 mm Ø 3-1/2" - 7" Ø

RECMAR



JUEGO DE LLAVES | MECHANICAL TOOL SET | CASSETTA ATTREZZI | MALETTE D'OUTILLAGE

154 llaves en métrico y en pulgadas para un completo trabajo en motores. Garantía de por vida.

154 pcs. Mechanics tool set in metric & inches. Lifetime warranty.

154 chiavi metriche e in pollici per un lavoro completo nel motore.Garantita a vita.

154 clés, métriques et en pouces pour un travail complet sur le moteur. Garantie à vie

REF
CRA935154



EXTRACTOR TAPONES DE TRIM / TRIM PLUGS EXTRACTOR / ESTRATTORE PER TAPPI DI TRIM / EXTRACTEUR DE BOUCHON DE TRIM

new

REF	
RECTOOLTRIMKIT	RECTOOLTRIM1 + RECTOOLTRIM2 + RECTOOLTRIM 3



REF	ÚTIL / TOOL / ATTREZZO / UTILE				(A)
RECTOOLTRIM1	1/2"	+	RECPIN4	+ RECPIN4.5	38 mm
RECTOOLTRIM2	1/2"	+	RECPIN4	+ RECPIN4.5	32 mm
RECTOOLTRIM3	1/2"	+	RECPIN6		35 mm



KITS DE RECAMBIO
SPARE KITS
KIT DI RICAMBIO
KITS DE RECHANGE



REF		PARA / FOR / PER / POUR
RECPIN4	3 PIN x 4 mm	RECTOOLTRIM1 RECTOOLTRIM1
RECPIN4.5	3 PIN x 4.5 mm	RECTOOLTRIM1
RECPIN6	3 PIN x 6 mm	RECTOOLTRIM3

Los pines de repuesto no tienen garantía.
Replacement pins are not guaranteed.
I perni di ricambio non sono garantiti.
Les broches de remplacement ne sont pas garanties.

RECMAR

TRIM PISTON	TILT PISTON		HP	
RECTOOLTRIM1		Yamaha	F25 - F40	
RECTOOLTRIM2	RECTOOLTRIM3	Yamaha	F115	2000-14
RECTOOLTRIM2	RECTOOLTRIM3	Yamaha	F150	2004-10
RECTOOLTRIM2	RECTOOLTRIM1	Yamaha	F150	2011+
RECTOOLTRIM2	RECTOOLTRIM3	Yamaha	F175 - F200 (2.8L)	
RECTOOLTRIM1	RECTOOLTRIM1	Yamaha	F200 - F250 (3.3L)	
RECTOOLTRIM1	RECTOOLTRIM1	Yamaha	F225 - F300 (4.2L)	
RECTOOLTRIM2	RECTOOLTRIM3	Yamaha	F350	
RECTOOLTRIM2		Yamaha	F425	
RECTOOLTRIM2		Yamaha	55-90 (2-Strokes)	1994+
RECTOOLTRIM2	RECTOOLTRIM3	Yamaha	115-200 + VMAX	
RECTOOLTRIM1	RECTOOLTRIM1	Yamaha	225 (2-Strokes)	
RECTOOLTRIM2	RECTOOLTRIM3	Suzuki	DF115 - DF300	
RECTOOLTRIM2	RECTOOLTRIM3	Evinrude	115 - 300 ETEC	
RECTOOLTRIM3		Johnson Evinrude	25 - 50 (2 Strokes)	1994-04
RECTOOLTRIM2	RECTOOLTRIM3	Johnson Evinrude	60 - 250 (2 Strokes)	1982-06
RECTOOLTRIM2	RECTOOLTRIM3	Honda	75 - 225	1997+
RECTOOLTRIM1		Seastar Steering		
RECTOOLTRIM2		Volvo Penta Trim Cylinders		
RECTOOLTRIM1		Mercruiser Alpha One & Bravo Trim Cylinders		

PULIDORA DE CILINDROS / ENGINE CYLINDER HONE / PULITRICE CILINDRI / RODOIR DE CYLINDRE

Para pulir los cilindros de los bloques. Garantizada de por vida.

Quikly removes the glaze from engine cylinder walls before installing new piston rings.
Lifetime warranty.

Per pulire i cilindri dei blocchi.
Garantita a vita.

Poli les cylindres des blocs moteur.
Garanti à vie.

REF
CRA904633



REF
CRA946331

VACUÓMETRO DOBLE FUNCIÓN / PRESSURE / VACUUM TESTER / VACUOMETRO DOPPIA FUNZIONE / VACUOMÈTRE DOUBLE FONCTION

Presión y vacío.
Ideal para comprobar las colas.

Combination unit that does pressure and vacuum testing in one units.
Recommended to test drives.

Pressione e sottovuoto. Ideale per il controllo dei piedi.

Pression et vide.
Idéal pour vérifier les embases.

REF
REC55134



COMPRESÍMETRO / COMPRESSION TESTER KIT / MANOMETRO / COMPRESSIOMÈTRE

Para motores gasolina con bases GM o Ford.

For gas engines with GM or Ford base.

Per motori benzina con base GM e Ford.

Pour les moteurs à essence bases GM ou Ford.

REF
CRA902171



INTERRUPTOR ARRANQUE / REMOTE STARTER / INTERRUTTORE AVVIAMENTO / INTERRUPTEUR DE DÉMARRAGE A DISTANCE

REF
CRA902175



PISTOLA PUESTA A PUNTO / TIMING LIGHT / PISTOLA MESSA A PUNTO / LAMPE STROBOSCOPIQUE

Con regulador de avance 0-60.

0-60 advance scale.

Con regolatore avanzamento 0-60.

Avec régulateur d'avance 0-60.

REF
CRA921023



TERMÓMETRO MULTIFUNCIONAL / INFRARED THERMOMETER / TERMOMETRO MULTIFUNZIONALE / THERMOMÈTRE MULTIFONCTIONNEL

Termómetro multifunción digital, por rayos infrarrojos.
Retención de la última lectura.
Autoapagado.

Multifunction digital infrared thermometer.
Retention of the last reading.
Auto Off function.

Termometro multifunzione digitale, a infrarossi.
Memoria dell'ultima lettura.
Autospegnimento.

Thermomètre multifonction numérique, par rayons infrarouges.
Conservation de la dernière lecture.
Arrêt automatique

REF
TECDT8580

Emisividad fija	Fixed emissivity	Misurazione	Mesure fixe	0,95 (-20ºC-->+320ºC)
Lectura en grados	Reading	Lettura in gradi	Lecture en degrés	Celsius & Farenheit
Precisión	Precision	Precisione	Précision	+/- 2%
Resolución	Resolution	Risoluzione	Résolution	1ºC
Distancia óptima de medida	Distancia optimal measurement	Distanza ottimale di misurazione	Distance de mesure optimale	6 --> 60 cm



PINZA AMPERIMÉTRICA / AMPERIC NIPPER / PINZA AMPEROMETRICA / PINCE AMPÈREMÉTRIQUE

Multifunción	multifunction	multifunzione	multifonction	AC & DC (40A/400A)
Diámetro maxilar	aw diameter	Diametro max	Diamètre maxi	30 mm
Display	Display	Display	Affichage	3 3/4 (Máx. 3999)
Precisión	Precision	Precisione	Précision	+/-(1,9% + 5 d. en AC) +/-(2,5% +10 d. en DC)
Ancho de banda	Bandwidth	Banda larga	Bande passante	50Hz - 500Hz (AC)
Resolución	Resolution	Risoluzione	Résolution	AC/DC 10mA. 100mV.
Resistencia	Resistence	Resistenza	Résistance	400 Ohms

REF
TEC218



TACÓMETRO ÓPTICO / OPTICAL TACHOMETER / TACOMETRO OTTICO / TACHYMÈTRE OPTIQUE

Profesional portátil controlado por microprocesador y con base de tiempos de cristal de cuarzo de gran precisión.
Retención de la última lectura en pantalla y registro lectura máxima y mínima del periodo de medida.

Professional portable microprocessor-controlled and with time base of quartz crystal of high precision.
Retention of the latest reading on screen reading and record the maximum and minimum measurement period.

Professionale portatile controllata da un microprocessore e con display a cristalli di quarzo di alta precisione.
Memoria dell'ultima lettura nello schermo e registro lettura massima e minima del periodo di misurazione.

Portable professionnel contrôlé par microprocesseur et avec base de temps de cristal de quartz de haute précision.
Conservation de la dernière lecture sur l'écran de lecture et enregistrement de la période de mesure maximale et minimale.

REF				
TEC384	TACÓMETRO	TACHOMETER	TACOMETRO	TACHYMÈTRE OPTIQUE
TEC786	CINTA REFLECTANTE	REFLECTIVE TAPE	BANDA PER TACOMETRO	RUBAN RÉFLECTEUR

Medidor de RPM hasta	RPM meter up	Misura RPM fino	Compteur de tours jusqu'à	(-99.999)
Precisión	Precision	Precisione	Précision	+/- (0,05% + 1 d.)
Resolución	Resolution	Risoluzione	Résolution	0,1 (-9.999,9)
Distancia óptima de medida	Distancia optimal measurement	Distanza ottimale di misurazione	Distance de mesure optimale	50 --> 150 mm.
-en función de luz ambiente	-depending on ambient ligh	- con luce ambiente	-selon la lumière ambiante	-300 mm



MULTITESTER DIGITAL — DIGITAL MULTITESTER — MULTITESTER DIGITALE — MULTIMÈTRE DIGITAL

DISPLAY COUNT	1999
MANUAL RANGE	✓
DATA HOLD	✓
DIODE MEASUREMENT	✓
TRANSISTOR MEASUREMENT	✓
AUTO POWER OFF	✓
CONTINUITY BUZZER	✓
MECHANICAL PROTECTION	✓

POWER	9V (6F22*1)
PRODUCT COLOR	Blue and Gray
PRODUCT NET WEIGHT	340 g
PRODUCT SIZE	190x80x33 mm
STANDARD ACCESSORIES	Battery (not include) Test lead Temperature Probe
STANDARD INDIVIDUAL PACKING	Gift Box, Manual

		RANGE	BEST ACCURACY
DC VOLTAGE (V)	V ⎓	200mV ~1000V	± (0.5%+3)
AC VOLTAGE (V)	V~	2V ~ 700V	± (0.8%+5)
DC CURRENT (A)	A ⎓	20μA ~10A	± (1.0%+3)
AC CURRENT (A)	A~	20mA ~10A	± (1.2%+5)
RESISTANCE (Ω)	Ω	200Ω ~ 200MΩ	± (0.8%+3)
CAPACITOR (F)	⊣⊢	2nF ~200μF	± (4.0%+5)
FREQUENCY (Hz)	Hz	200KHz	± (1.5%+10)
TEMPERATURE (°C)	°C	-40°C ~1832 °C	±(1.0%+3)
TEMPERATURE (°F)	°F	-40°C ~1832 °C	±(1.0%+3)



REF
TEC145

VACUÓMETRO SINCRONIZADOR — VACUUMMATE ALLWEATHER — VACUOMETRO — VACUUMATE SYNCHRONISEUR

Vacuómetro, sincronizador de admisión, analizador dinámico de fugas y tacómetro. Impermeable e insumergible con una funda especial. Posee mayor estabilidad que los indicadores analógicos o que cualquier otro sistema. Se autorregula a los cambios de presión barométrica. Alimentación con corriente continua de 12 V, se puede utilizar con cualquier batería de embarcación o vehículo o con un adaptador de entrada a la red (230V/12V). Indicadores LED de batería descargada y de alimentación no adecuada. Contiene: Cable y pinzas por alimentación 12V, tubos de santoprene de conexión, 2 juegos de adaptadores flexi-rígidos, caja de almacenaje.

Vacuumate allweather, 4 x carb/ throttle valve. Waterproof. Shock resistant composite-moulded polyurethane and polycarbonate casing for maximum strength and resilience. Self-calibrates for barometric changes. Solid state sensors are drop proof. It has internal rechargeable 1,5Ah 7,2V NiMH batteries providing up to 6 hours autonomy. Battery power is conserved by auto-switch-off 5 minutes after last being used and LEDs use full power only when measurements are taken. Kit includes custom travel case, battery cord-set, T-connector & 2 full sets of unique flexi-rigid.

Vacuometro, sincronizzatore d'aspirazione, analizzatore dinamico di fughe e tachimetro. Impermeabile e immergibile con una custodia speciale. Possiede maggiore sensibilità degli indicatori analogici o con altri sistemi. Si autoregola al cambio di pressione barometrica. Alimentazione con corrente continua da 12 V, si può utilizzare con qualsiasi batteria per imbarcazioni, veicoli e con un adattatore di entrata da 230V/12V. Indicatore LED di batteria scarica e di alimentazione non corretta. Contiene: Cavi e pinze per alimentazione 12V, tubi di santoprene di connessione, 2 adattatori flexi-rígidi, scatola per conservare l'attrezzo.

VacuumMate affiche la pression d'admission individuelle de 4 carburateurs séparés (ou boîtier papillons à injection de carburant). Imperméable et insubmersible avec une housse spéciale. Il a une plus grande stabilité que les indicateurs analogiques ou tout autre système. Il autorégule les changements de pression barométrique. Alimentation 12 V DC, utilisable avec n'importe quelle batterie de bateau ou de véhicule ou avec un adaptateur secteur (230V/12V). Indicateurs LED de batterie déchargée et de puissance insuffisante. Contient: câble d'alimentation 12V et pinces, tubes de connexion, 2 jeux d'adaptateurs flexi-rigides, boîte de rangement.

REF
TCMVRM5



TABLET DE DIAGNOSIS | DIAGNOSIS TABLET | TABLET DIAGNOSI | TABLETTE DE DIAGNOSTIC

AXONE NEMO

La primera diagnosis Smart en el mundo

Axone Nemo es un potente tablet diseñado para asegurar al mecánico un óptimo uso, tanto en el entorno de taller, como en las intervenciones en el exterior. Permite efectuar operaciones de diagnosis a gran velocidad. El chasis de magnesio le proporciona una mayor robustez y rigidez ante los golpes, muy ligero con gran capacidad de disipación de la temperatura interna.

The first Smart diagnosis in the world

Axone Nemo is a powerful tablet designed to ensure the mechanic optimal use, both in the workshop environment, as interventions abroad.
It allows to carry out diagnosis operations at high speed. The magnesium chassis provides greater robustness and rigidity against shock, very light with great capacity to dissipate the internal temperature.

La prima diagnosi Smart nel mondo

Axone Nemo è un potente tablet creato per assicurare al meccanico un ottimo uso, sia nelle officine sia negli internenti all'esterno.
Permette di effettuare operazioni di diagnosi a gran velocità. La scocca in magnesio gli dona una maggior robustezza contro i colpi, molto leggero.
Il software operativo

Le premier outil de diagnostic intelligent au monde

Axone Nemo est une tablette puissante conçue pour assurer une utilisation mécanique optimale, aussi bien dans un atelier que lors des interventions à l'extérieur. Il permet d'effectuer des opérations de diagnostic à grande vitesse. Le chassis en magnésium offre une plus grande robustesse contre les chocs, très léger avec une grande capacité à dissiper la température interne.

12" (2160 x 1440)
Intel Quad Core N3160
8 GB RAM
250 GB
WIFI double channel
Bluetooth 4.0 Low Energy
2 camera x 5 Megapixels





NAVIGATOR TXB EVOLUTION

La evolución de la diagnosis, diseñado y desarrollado especificamente para el ambiente Marino.

Las características del hardware lo compatibilizan con todos los protocolos actualmente existentes, su conector CPC de 16 polos integrados, permite el uso de todos los cables de diagnosis. Es compatible con AXONE NEMO y PC. Gracias a la tecnología Bluetooth el técnico podrá realizar una cómoda diagnosis sin cables de por medio, incluso desde el pantalán. Extremadamente potente, permite al mecánico una gestión fácil de los archivos de mapa. Los estandares CAN soportados incluyen la posibilidad de gestión CAN single wire y un CAN controller más para la diagnosis sobre más redes.
Permite la grabación de la sesión de diagnosis en modalidad "pruebas dinámicas", es decir con la embarcación en movimiento, para localizar averías específicas que no se podrían verificar en el amarre.

The evolution of the diagnosis, designed and developed specifically for the marine environment.

The characteristics of the hardware make it compatible with all currently existing protocols, its integrated 16-pole CPC connector, allows the use of all diagnostic cables. It is compatible with AXONE NEMO and PC. Thanks to Bluetooth technology, the technician can make a comfortable diagnosis without wires, even from the jetty.
Extremely powerful, they allow the mechanic to easily manage the map files. The CAN standards supported include the possibility of CAN single wire management and a further CAN controller for the diagnosis of more networks.
It allows the recording of the diagnosis session in "dynamic tests" mode, that is to say with the boat in motion, to locate specific faults that could not be verified in the mooring.

L'evoluzione della diagnosi, disegnato e sviluppato specificamente per l'ambiente marino.

Le caratteristiche hardware lo rendono compatibile con tutti i protocolli attualmente esistenti, il suo connettore CPC 16 poli integrato consente l'utilizzo di tutti i cavi diagnostici. E' compatibile con AXONE NEMO e PC. Grazie alla tecnologia Bluetooth il tecnico potrà realizzare una diagnosi senza cavi in mezzo, anche dal molo.
Estremamente potente, permette al mecanico una gestione facile degli archivi della mappa. Gli standard CAN supportati offrono la possibilità di gestire: CAN single wire e un altro CAN controller per eseguire le diagnosi su più reti.
Permette la registrazione di una sessione di diagnosi in modalità "prova dinamica", ovvero con l'imbarcazione in movimento, per constatare avarie specifiche che non si possono verificare in officina.

L'évolution du diagnostic, dessiner et développer spécialement pour l'environnement marin

Les caractéristiques du matériel le rendent compatible avec tous les protocoles existants, son connecteur CPC 16 pôles intégré permet l'utilisation de tous les câbles de diagnostic.Il est compatible avec Axone Nemo et Pc. Grâce à la technologie Bluetooth, le technicien peut effectuer un diagnostic sans fil, même depuis le quai. Extrêmement puissant, il permet au mécanicien de gérer facilement les fichiers des cartes. Les normes CAN prises en charge incluent la possibilité d'une gestion CAN à fil unique et un autre contrôleur CAN pour le diagnostic en réseaux. Il permet l'enregistrement de la séance de diagnostic en mode «test dynamique» c'est à dire avec le bateau en mouvement pour localiser des défauts spécifiques non vérifiables en atelier.

SRAM	16 Mb
MEMORY	NAND Flash 8 GB
BLUETOOTH	





Ref				
RECAXONEVOICE	Axone Voice IDC5 Premium Marine + Navigator			
RECAXONENEMO	Axone Nemo			
RECD06591	Navigator TXB Evolution			
RECD127X0	Axone Nemo + Navigator TXB Marine			
RECZ06590PC	Navigator TXB + PC	Navigator TXB + Labtop	Navigator TXB + PC	Navigator TXB + Pc portable
REC3901775	Kit maleta para guardar cables de interface	Hand case for harnesses	Kit per cavi intergaccia	Valise pour ranger les câbles d'interface
RECAGA00M1	Contrato de actualización software (y renovación anual).	Software contract and annual renovation	Contratto software (e rinnovo annuale).	Contrat de mise à jour logicielle (et renouvellement annuel).

APLICACIONES | APPLICATIONS | APPLICAZIONI | APPLICATIONS

Consulte la lista actualizada de aplicaciones en: | See the updated list of applications in: | Vedi l'elenco aggiornato delle applicazioni in: | Consultez la liste mise à jour des applications sur:

www.texaiberica.com/cobertura-diagnosis

MOTORES INTRABORDA | INBOARD ENGINES MOTORI ENTROBORDO | MOTEURS IN-BORD	
CATERPILLAR	3196, 3176, 3126B, 3508B, 3508C, C12, C12 Acert, C18 Acert Tier 2, C32 Acert IMO II, C32 Acert Tier 2, C32 Acert Tier 2 HP, 3512 B HD,C3512B, 3512C HD, 3512C, 3516B HD, 32 Acert Tier 2 H.P. Recreational, C32 Acert Tier 3, C7, C7 Acert, C9 Acert., 3516B, 3516C HD, 3516C, C15 Acert, C6.6 Acert
CRUSADER	5.0, 5.7, 6.0, 8.1 MPI & HO MPI
CUMMINS / MW	QSD2.0-115 / 130 / 150 / 170, QSD2.8-220, QSD4.2-270 / 320 / 350, QSB5.9 / 6.7, QSC8.3, QSK19, QSL9, QSM11 (Sistema Inyección Bosch | System injection Bosch | Sistema Iniezione Bosch | Système d'injection Bosch) Comon Rail
FIAT	C13, C78, C87, GE CURSOR 250E, 350E, 400E, N40, N60, N67, S30
FNM	HPEP, HPE 80-300 HP
HYUNDAI SEASALL	D150P/S. D170J/P/S. S220P/S. S250J/P/S. U125J/P/S
ILMOR	5.7L. 6.0L. 6.2L. MV-8
INDMAR	5.7, 6.0, 8.1, Steyr 256 Diesel
KOHLER	
LOMBARDINI Marine	LDW 194 JMT, LDW 240 JMT
MAN	D2868, V8-1000, V8-1200
MERCRUISER	350, 377, 454, 496, 496MAG, 3.0L, 4.3L, 5.0L, 5.7L, 6.2L, 7.4L, 8.1L, 8.2L, TBI, MPI, Black Scorpion, Vazer, Mandos SmartCraft, D2.8D-Tronic
MERCRUISER Diesel	VM D-Tronic, VM (no D-Tronic), MD2.0-115/130/150/170, MD2.8-270/320/350,TDI3.0-230/260, TDI4.2

MOTORES INTRABORDA | INBOARD ENGINES MOTORI ENTROBORDO | MOTEURS IN-BORD	
MERCURY Racing Inbord	SCI, EFI, QC4V, 500EFI, 520, 525EFI, 540, 565, 575, 600, 850, Scorpion 377
MTU	MDEC C2
PCM MARINE Engines	5.0L, 5.7L, 6.0L, 8.1L
PERKINS	1106C-E6OTA 6.0L
SEA-DOO	Speedster, Challenger, Utopia, Islandia, Wake, Wake Speedster, Sportster
SISU AGCO	44 CTIM-2V, 49/66/74/84 CTIM-4V
STEYR MOTORS	MO306H43WJ, MO54NA33, MO84K32, MO94K33, MO114K33, MO126M28, MO144M38, MO156K25, MO164M40, MO166M28, MO174V40, MO196K35, MO236K42, MO256H45, MO256H43, MO286H43 SE126E25, SE156E26, SE196E35, SE236E40, SE236S36 SE266, SE286, SE306J38
VM MOTORI	2.8L, 4.2L D-Tronic, MD704, MD706, MR504LB
VOLKSWAGEN Marine	SDI, TDI
VOLVO PENTA	KAD, EDC, EGC, EVC, GXI, OSI, GI, GSI, OSXI, IPS, TAMD
YANMAR	4BY2-150 / 180, 6BY2-220 / 260 (Sistema Inyección Bosch | System injection Bosch | Sistema Iniezione Bosch | Système d'injection Bosch) 4BY3-150/180, 4JH, 6BY3-220/260, 6LY3, 8LV-320/350/370

MOTORES FUERABORDA | OUTBOARD ENGINES MOTORI FUORIBORDO | MOTEURS HORS-BORD	
EVINRUDE	(90 - 250 Ficht Ram) E-Tec 25 - 300 HP, DFi
HONDA Marine	BF 40-250 HP
JOHNSON	4 Stroke
MARINER	4 Stroke, OptiMax, Verado, DFI, EFI
MERCURY	4 Stroke, OptiMax, Verado, DFI, EFI
MERCURY Racing	OPTIMAX, DSi, VERADO 400R
PARSUN	40 EFi
SELVA Marine	4 S troke EFi
SUZUKI Marine	DF 40 -300 HP
TOHATSU	MFS, BFW, BFT
YAMAHA Marine	F, T, Z 30 - 350 HP

MOTOS DE AGUA | PWC | MOTO D'ACQUA | JET-SKI	
HONDA Marine	Aquatrax
KAWASAKI Marine	STX, Ultra.
SEA-DOO	GTI, GTX, RXP, RXT,GTR, GTS, GTX-S, Spark, Wake Pro, Wake
YAMAHA Marine	Waverunner FX, FZR, FZS, GP, VX

TEXA

SIN CABLES DE INTERFACE | WITHOUT INTERFACE CABLE | SENZA CAVI INTERFACE | SANS CABLES D'INTERFACE

REF		
REC3902417	OBD, FNM Marine, VOLKSWAGEN, HYUNDAI	AM08
REC3902659	Marine FPT	AM11
REC3904277	Marine CUMMINS, MERCURISER Diesel, VM (not D-Tronic), KOHLER	AM24A
REC3905159	Marine VOLVO EGC 05/05>05/07	AM26
REC3905286	Marine MTU-MDEC	AM28
REC3905397	Marine CATERPILLAR, PERKINS	AM29
REC3906219	Marine TOHATSU	AM30
REC3906891	Marine MAN	AM31
REC3905015	Personal Water Craft KAWASAKI cable kit	


REC3902417


REC3902659


REC3904277


REC3905286

REC3905159


Conector redondo
Round connector
Connettore rotondo
Connecteur rond


REC3905397


REC3906219


REC3906891


REC3905015

TEXA

RECAMBIOS MARINOS

INTERFACE AM01

REC3902358	AM01



REC3902407	Marine HONDA / TOHATSU, PGM (FI)	AM02
REC3902247	Marine 2 pin MERCURY, MERCRUISER	AM04
REC3902250	Marine 4 vie MERCURY, MERCRUISER	AM05
REC3902413	Marine YAMAHA / SELVA	AM06
REC3909234	Marine 6 pin VOLVO PENTA	AM07
REC3902467	Marine VOLVO KAD - TAMD	AM09
REC3902864	Marine STEYR	AM12
REC3902865	Marine EVINRUDE	AM13
REC3902907	Marine VOLVO, MERCRUISER GAS, MEFI-4, 4B,3,2,1, CRUSADER	AM14
REC3902931	Marine YANMAR	AM15
REC3903560	Marine SUZUKI	AM22
REC3905265	Marine MERCRUISER / VM D-Tronic	AM27
REC3908405	PARSUNS	3151/ AP54

TEXA


REC3902247


REC3902407


REC3902413


REC3902250


REC3909234


REC3902467


REC3902865


REC3902864


REC3903560


REC3902907


REC3902931


REC3905265


REC3908405

INTERFACE AM01CAN

REC3903008	AM01CAN



REC3910120	Marine VOLVO, MERCRUISER GAS, MEFI-5 / EGC, ILMOR, CRUSADER, ILMOR, INDMAR, PCM (MEFI-5/EGC UBD-Msocket)	AM16
REC3903502	Marine VOLVO, EGC-EV	AM18
REC3910127	Marine MERCURY, MARINER, CUMMINS 2010+, MANDOS MCM, SMARTCRAFT	AM25
REC3907103	Marine STEYR with CAN Line protocol	AM32
REC3907642	YANMAR MARINE CAN CABLE	AM33


REC3910120


REC39003502


REC39004778


REC3907103


REC3907642

TEXA

KIT DIAGNOSIS Y, REPROGRAMACIÓN DE LLAVE

CABLE KIT FOR DIAGNOSIS AND KEY REPROGRAMMING

KIT PER LA DIAGNOSI E RIPROGRAMMAZIONE DE CHIAVE

KIT DE DIAGNOSTIC ET REPROGRAMATION DE CLÉ

REC3906015	BRP Group	3151/AP43



TEXA

PUNTAS DE DERIVACIÓN

Puede utilizarse con interface AM01 o AM01CAN dependiendo de la marca.

REFERRAL POINTS

It can be used with AM01 or AM01CAN interface depending on the brand.

PUNTA DI DERIVAZIONE

Può essere utilizzato con l'interfaccia AM01 o AM01CAN in base alla marca.

PONTS DE DÉRIVATION

Peut être utilisé avec l'interface AM01 ou AM01CAN selon la marque.

REC3904048	AM10



TEXA

RECAMBIOS MARINOS

CONDUCTO TAPON DESAGÜE | HOSE FITTING W/DRAIN | PLUG KIT CONDOTTO CON TAPPO | COUDE DRAIN POUR COLLECTEUR

REF	OEM
REC862210A01	MC862210A01



TAPON DRENAJE | DRAIN PLUG | RUBINETTO | BOUCHON DE VIDANGE

REF	OEM	
REC82745	OMC379957 MC22-87238	1/4"
REC22-05154	MC22-16951Q1	3/4"



REC22-05154



REC82745

TAPON COLECTORES | PIPE PLUG | TAPPI | BOUCHONS

REF	OEM	
REC22-328022	22-32802	1/8 - 27
REC22-32803	M22-32803	3/8 - 18
BA50-090-075	22-33198A1	3/4 - 14
REC22-36382	22-36382	1/4 - 18



TUERCAS | NUTS | DADI | ÉCROUS

REF	OEM		
REC11-862903	11-82671013	3/8 - 24	Acero inox. | Stainless steel | Acciaio inox | Acier inox.
REC11-34933	11-34933	7/16 - 24	
REC11-8267089	11-35888	1/4 - 28	
REC11-13436	11-82670911	5/16 - 24	
REC11-52707Q1	11-52707Q1	3/4 - 16	Bronce | Bronze | Bronzo | Bronze



RACORS DE LATÓN | RACORS IN BRASS | RACCORDI IN OTTONE | RACCORD EN LAITON

REF			
GS31067	1/4" NPT	3/8" = 9,5 mm	2
GS31066	1/4" NPT	5/16" = 7,9 mm	2
REC22-00842	1/4" NPT	1/4" = 6,4 mm	
REC22-00845	1/8" NPT	5/16" = 7,9 mm	



REF			
GS31065	1/4" NPT	3/8" = 9,5 mm	2
GS31166	1/4" NPT	5/16" = 7,9 mm	2
GS31155	3/8" NPT	3/8" = 9,5 mm	2
GS31156	3/8" NPT	5/16" = 7,9 mm	2
GS31157	3/8" NPT	1/4" = 6,4 mm	2
GS31245	1/4"	1/4"	
REC22-00874	3/8"	3/8"	



ENTRONQUE DE LATÓN | MALE PIPE IN BRASS | RACCORDI IN OTTONE | RACCORD EN LAITON

REF		
BRA125-3/16X1/4	1/4"	3/16"
BRA125-1/4X1/4	1/4"	1/4"
BRA125-1/4X3/8	3/8"	1/4"
BRA125-1/4X1/2	1/2	1/4"
BRA125-5/16X3/8	3/8"	5/16"
BRA125-3/8X3/8	3/8"	3/8"
BRA125-3/8X1/2	1/2"	3/8"
BRA125-1/2X3/8	3/8"	1/2"

REF		
BRA125-1/2X1/2	1/2"	1/2"
BRA125-1/2X3/4	3/4"	1/2"
BRA125-5/8X3/8	3/8"	5/8"
BRA125-5/8X3/4	3/4"	5/8"
RAC1/2X20	1/2"	3/4"
BRA125-3/4X3/4	3/4"	3/4"
BRA125-1X3/4	3/4"	1"



SENSORES Y ALARMAS | SENDERS & ALARMS | SENSORI E ALLARMI | SONDES ET ALARMES

SENSOR PRESIÓN ACEITE | OIL PRESSURE SENDER | SENSORI PRESSIONE OLIO | SONDE DE PRESSION D'HUILE

REF			
REC8M0068784	180 PSI	1/8" NPTF	USA
FA90519	100 PSI	1/8" NPTF	USA
FA90515	5 bar	1/8" NPTF	EURO
FA90526	10 bar	1/8" NPTF	EURO



KIT TEMPERATURA Y PRESIÓN DE ACEITE CON ALARMA | COMPLETE TEMPERATURE & OIL PRESSURE WARNING KIT | KIT TEMPERATURA E PRESSIONI DELL'OLIO CON ALLARME | KIT SONDE TEMPÉRATURE ET PRESSION D'HUILE

REF
REC41400

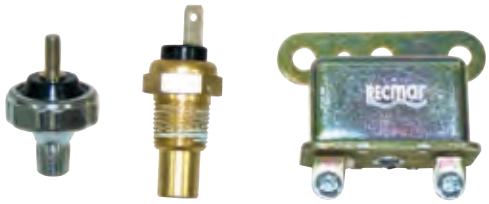

SENSOR TEMPERATURA | TEMPERATURE SENDER | SENSORI TEMPERATURA | SONDE DE TEMPERATURE

REF		
REC97258A1	1/2" = 14 NPTF	
FA90401	1/8"	USA
FA90412	1/8"	EURO



MANGUERAS | HOSES | TUBO | TUYAUX

MANGUERA ESCAPE | EXHAUST HOSE | TUBO DI SCARICO | TUYAU D'ECHAPPEMENT

Manguera de goma de espiral ondulada para sistemas de escape y refrigeración.
Su particular estructura permite efectuar radio de curvatura de 1 a 1,5 vueltas por el diámetro interno.

General purpose hose. Hardwall corrugated cover rubber hose.
Extremly flexible.
The construction ensures bending radius up to 1 / 1.5 for the inside diameter.

Tubo in gomma spiralato ondulato per il sistema di scarico e raffreddamento.
La sua particolare struttura consente di effettuare un raggio di curvatura da 1 a 1,5 giri per il diametro interno.

Tuyau d'échappement et de refroidissement en caoutchouc ondulé en spirale. Sa structure particulière lui garantit un rayon de courbure jusqu'à 1 / 1,5 de son diamètre intérieur

SCAMO / SP / CAJ

REF	Ø (mm)			
GS35033	30	30 mm		
GS35034	40	40 mm		
GS35045	45	45 mm		
GS35035	51	51 mm		
GS35036	60	60 mm		
GS35037	63,5	63,5 mm		
GS35038	76	76 mm		
GS35039	80	80 mm	-30ºC ➡ 100º C	x m
GS35040	90	90 mm		
GS35041	102	152 mm		
GS35042	120	240 mm		
GS35043	127	255 mm		
GS35044	152	305 mm		
GS35046	203	815 mm		
GS35047	254	1.270 mm		



Lloyd's Register

Rina CE 0474
Lloyd's Register 96/00/127

ISO 13363 - 2004 T-2 Class B
SAE J 2006 - 2003 R2

GARANTIA • WARRANTY • GARANZIA 5 AÑOS YEARS ANNI

ht hoses technology

TUBO DE FIBRA | TUBING CONNECTOR | TUBO IN FIBRA DI VETRO | TUYAU EN FIBRE DE VERRE

Tubo de fibra para empalme de mangueras en sistemas de escape húmedos.
Bajo demanda, puede suministrarse hasta 457 mm.

Manufactured in fiberglass.
Availables on demand up to 18".

Tubo in fibra di vetro.
Disponibile sotto richiesta fino a 457mm.

Tuyau en fibre de verre.
Disponible sur demande jusqu'à 457mm.

REF	Ø EXT (mm)		
TRI260-4001	102	121ºC	152 mm
TRI260-4121	115		
TRI260-5001	127		
TRI260-6001	152		

TRIDENT



MANGUERAS DE MOTOR Y CODOS DE SILICONA

Diseñadas para aplicación marina, de paredes duras, son resistentes a elevadas temperaturas (hasta 177 °C) que poseen, a su vez, una gran flexibilidad.
De interiores suaves al igual que los arcos de los fuelles y codos son de color azul.
Absorben mejor los movimientos del motor, la vibración y el ruido.
Son las standard en los grandes yates.
Cumple las normas SAEJ2006, ABYC P1, NMMA.

BENEFICIOS
Su instalción es mejor y más fácil; resuelve los problemas de espacio, obstrucción y desvío, en menos tiempo y con menos costes.
Reduce la presión posterior del motor.
Alarga la vida del sistema de escape y de la embarcación. .

ENGINE HOSES AND ELBOW IN SILICONE

Heavy-wall construction and best rubber & silicone formulations.
Resistence up to 350ºF.
Excelent flexibility and tight bend radius design. Smooth interior surface & bend arcs.
Maximum absortion of engine movement, vibration and noise.
Complies with new SAEJ2006, ABYC P1, NMMA standards.

BENEFITS
Solves the tough marine exhaust system problems. Easier and better installations.
Solves misalignment, obstruction & space problems with less labor, parts & cost.
Reduce engine back pressure.
Smoother, quieter operation.
Extends life of exhaust system & boat.

TUBI MOTORI E GOMITI IN SILICONE

Costruiti per uso marino, di materiale resistente, anche alle alte temperature (finoa 177°C).
Flessibili.
Sia gli interni che gli esterni, dei tubi e dei gomiti sono di colore azzurro.
Assorbono meglio i movimenti del motore, le vibrazioni e il rumore.
Sono standard nei grandi yachts.
Normativa SAEJ2006, ABYC P1, NMMA.

BENEFICI:
Di facile installazione: risolve il problema dello spazio, ustruzioni e deviazioni, in meno tempo e meno costi.
Riduce la pressione posteriore del motore, migliora il suo rendimento eirduce la spesa nei pezzi di ricambio.

TUYAU MOTEUR ET COUDE EN SILICONE

Conçu pour une utilisation marine, en matériau résistant, même à des températures élevées (jusqu'à 177 ° C).
Excellente flexibilité et sa conception permet d'avoir de faibles rayons de courbure .
Absorption maximale des mouvements du moteur, des vibrations et du bruit.
Ils sont installés en standard dans les grands yachts.
Normes SAEJ2006, ABYC P1, NMMA.

AVANTAGES:
Facile à installer, il résout les problèmes d'alignement, d'obstruction et d'espace avec moins de main-d'œuvre, de pièces et de coûts.
Fonctionnement plus fluide et plus silencieux.
Prolonge la durée de vie du système d'échappement et du bateau

CODO 90º DE SILICONA

Bajo demanda, puede suministrarse hasta 10" (254 mm).

REF	Ø INT
TRI290V-3000	76 mm 3"
TRI290V-4000	102 mm 4"
TRI290V-4500	115 mm 4 1/2"
TRI290V-5000	127 mm 5"
TRI290V-6000	152 mm 6"

90º ELBOW IN SILICONE

Available on demand up to 10" (254 mm.)



GOMITO 90º IN SILICONE

Sotto richiesta si può avere fino a 10" (254mm)

VHT

REF	Ø INT	
TRI292V2000	51 mm 2"	177°C
TRI292V2120	63 mm 2 1/2"	

COUDE À 90º EN SILICONE

Disponible sur demande jusqu'à 10" (254mm)



CODO 45º DE SILICONA

VHT

REF	Ø INT	
TRI242V-2000	51 mm 2"	177°C
TRI240V-3000	76 mm 3"	
TRI240V-3500	90 mm 3 17/32"	
TRI240V-4000	102 mm 4"	
TRI240V-6000	152 mm 6"	

45º ELBOW IN SILICONE



GOMITO 45º IN SILICONE

COUDE À 45º EN SILICONE

FUELLE DE SILICONA

Bajo demanda, puede suministrarse hasta 10" (254 mm).

REF	Ø INT	
TRI270V-4000	102 mm 4"	133 mm 5 1/4"
TRI270V-4500	115 mm 4 1/2"	133 mm 5 1/4"
TRI270V-5000	127 mm 5"	152 mm 6"
TRI270V-6000	152 mm 6"	177 mm 7"

BELLOW IN SILICONE

Available on demand up to 10" (254 mm.)



SOFFIETTO IN SILICONE

Sotto richiesta si può avere fino a 10" (254mm)

SOUFFLET EN SILICONE

Disponible sur demande jusqu'à 10" (254mm)

MANGUERA DE ESCAPE DE SILICONA / EXHAUST & WATER HOSE IN SILICONE / TUBO DI SCARICO IN SILICONE / TUYAU D'ECHAPPEMENT ET D'EAU EN SILICONE

REF	Ø INT	
TRI202V-4004	102 mm 4"	50 cm
TRI202V-5004	127 mm 5"	50 cm
TRI202V-6004	152 mm 6"	50 cm
TRI202V-8004	203 mm 7"	50 cm



Bajo demanda, puede suministrarse hasta 18" (457 mm).
Available on demand up to 18" (457 mm.)
Sotto richiesta si può avere fino a 18" (457mm)
Disponible sur demande jusqu'à 18" (457mm)

REF	Ø INT	
TRI252V0340-36	19 mm 3/4"	30 cm 1'
TRI252V1000-36	25 mm 1"	30 cm 1'
TRI252V1140-36	32 mm 1 1/4"	30 cm 1'
TRI252V1120-36	38 mm 1 1/2"	30 cm 1'
TRI252V1340-36	45 mm 1 3/4"	30 cm 1'



LLAVE DE ARRANQUE / IGNITION STARTER SWITCHES / CHIAVE DI AVVIAMENTO / CONTACTEUR À CLÉ

3 posiciones con retroceso, Off-Contacto-Arranque.
Fabricada en latón con frontal cromado.
Chrome plated brass face nut and brass back-up nut.

3 positions with return, Off-Ignition-Start.

3 posizioni con ritorno Off-Contatto-Avviamento.
In ottone con frontale cromato.

3 positions, Off-Contact-Start.
Fabriqué en laiton avec façade chromée.
Écrou frontal en laiton chromé et écrou d'appui en laiton.

REF	A			
GS11150	28 mm	3, 15A 12V	3	1

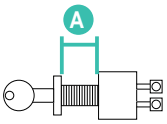



GOLDENSHIP

Fabricada en latón con frontal protector de goma. 3 posiciones con retroceso, Off-Contacto-Arranque.

Made in brass with rubber cap protector.
3 positions with return, Off-Ignition-Start.

Prodotta in ottone con parte frontale in gomma, 3 posizioni con ritorno, Off-Contatto-Avviamento.

En laiton avec façade de protection en caoutchouc. 3 positions: Off-Contact-Start.

REF			
GS11151	3	3	1
GS11154	4	3	1



GOLDENSHIP

Plástico con frontal protector de goma.
3 posiciones con retroceso, Off-Contacto-Arranque.

Made in plastic with rubber cap protector.
3 positions with return, Off-Ignition-Start.

In plastica con parte frontale in gomma 3 posizioni con ritorno, Off-Contatto-Avviamento.

Plastique avec façade de protection en caoutchouc.
3 positions :
Off, contact et démarrage.

REF	A			
GS11152	15 mm	3	3	1

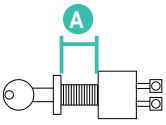



GOLDENSHIP

RECAMBIOS MARINOS

Plástico con frontal protector de goma.
3 posiciones con retroceso, Off-Contacto-Arranque.

Made in plastic with rubber cap protector.
3 positions with return, Off-Ignition-Start.

In plastica con parte frontale in gomma 3 posizioni con ritorno, Off-Contatto-Avviamento.

Plastique avec façade de protection en caoutchouc.
3 positions : Off, contact et démarrage.

REF			
GS11153	5	3	1

GOLDENSHIP



Plástico.
4 posiciones con retroceso, Accesorios-Off-Contacto-Arranque.

Made in plastic with rubber cap protector.
4 positions with return, Acc-Off-Ignition-Start.

Prodotta in plastica.
4 posizioni con ritorno, Blower-Off-Contatto-Avviamento.

Plastique
4 positions avec retour, Accessoires-Off-Contact-Start.

REF	A			
GS11155	15 mm = 5/8"	7	4	1
GS11156	6 mm = 1/4"	7	4	1

GOLDENSHIP

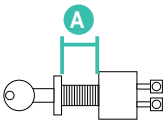



Fabricada en plástico.
3 posiciones con retroceso, Off-Contacto-Arranque (Starter).

Made in plastic. 3 positions with return, Off-Ignition-Start (Choke).

Prodotta in plastica. 3 posizioni con ritorno, Off-Contatto-Avviamento (Starter).

En plastique.
3 positions avec retour, démarreur sans contact.

REF	A			
GS11158	15 mm = 5/8"	6	3	1
GS11157	6 mm = 1/4"	6	3	1

GOLDENSHIP

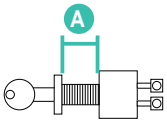



GS11158



GS11157

Fabricada en plástico.
Con cables incluidos.
3 posiciones con retroceso, Off-Contacto-Arranque (Starter).

Made in plastic.
3 positions with return, Off-Ignition-Start (Choke).
With wires included.

Prodotta in plastica.
Con cavi inclusi.
3 posizioni con ritorno, Off-Contatto-Avviamento (Starter).

En plastique.
Avec câbles inclus.
3 positions avec retour, démarreur sans contact.

REF			
GS11159	6	3	1

GOLDENSHIP



IDENTIFICACIÓN MOTOR — ENGINE'S IDENTIFICATION — IDENTIFICAZIONE MOTORE — IDENTIFICATION MOTEUR

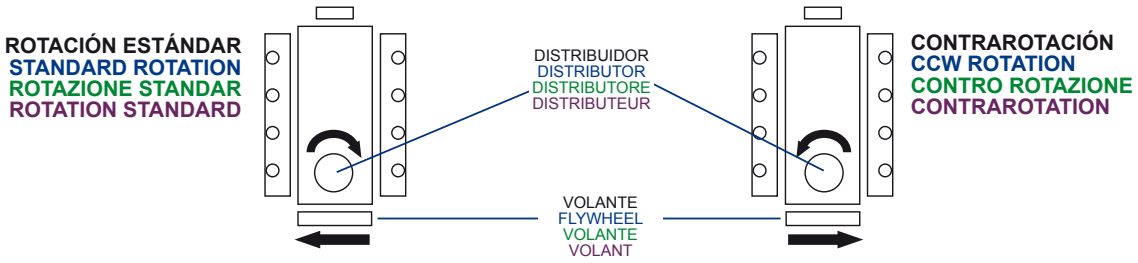

MODELO / MODEL / MODELLO / MODELE	BASE	CYL.	C.C.	Ø PISTÓN / Ø PISTON / Ø PISTONE / Ø PISTON	COJINETE BIELA / BEARING CONNECTING ROD / BRONZINE BIELLA / ROULEMENT DE BIELLE	COJINETE BANCADA / BEARING CRANKSHAFT / BRONZINE BANCO / ROULEMENT DE VILEBREQUIN	APRIETE DE MOTOR kg/m | TORQUE ENGINE kg/m | DATI DI SERRAGGIO kg/m | SERRAGE DU MOTEUR kg/m			
							CULATA / HEAD / TESTATA / CULASSE	VOLANTE / FLYWHEEL / VOLANO / VOLANT	BIELA / CONNECTING ROD / BIELLA / BIELLE	CIGÜEÑAL / CRANKSHAFT / ALBERO MOTORE / VILEBREQUIN
CHRIS-CRAFT										
185	GM 283	V8	4.6 L	98.42	50.80	58.38	8.8	8.2	4.5	9.5
200 - 215	GM 307	V8	4.9 L	98.42	53.34	62.19	8.8	8.2	6.2	9.5
200 - 225	GM 305	V8	5.0 L	95.00	53.34	62.19	8.8	8.2	6.2	9.5
210 - 230	GM 327	V8	5.4 L	101.60	53.34	62.19	8.8	8.2	6.2	9.5
250 - 300	GM 350	V8	5.7 L	101.60	53.34	62.19	8.8	8.2	6.2	9.5
330	GM 454	V8	7.4 L	108.00	55.88	69.81	10.8	6.2	6.8	10.8
CRUSADER- RIVA										
185	GM 283	V8	4.6 L	98.42	50.80	58.38	8.8	8.2	4.5	9.5
190 - 220 - 210	GM 305	V8	5.0 L	95.00	53.34	62.19	8.8	8.2	6.2	9.5
200	GM 307	V8	5.0 L	98.42	53.34	62.19	8.8	8.2	6.2	9.5
210-225-230-250	GM 327	V8	5.3 L	101.60	53.34	62.19	8.8	8.2	6.2	9.5
265 - 270 - 350	GM 350	V8	5.7 L	101.60	53.34	62.19	8.8	8.2	6.2	9.5
320	GM 427	V8	7.0 L	108.00	55.88	69.81	10.8	6.2	6.8	10.8
320-350-355-365	GM 454	V8	7.4 L	108.00	55.88	69.81	10.8	6.2	6.8	10.8
380	GM 502	V8	8.2 L	113.43	55.88	69.81	10.8	6.2	6.8	14.9
MERCRUISER										
120	GM 153	L4	2.5 L	98.42	50.80	58.38	12.5-13.8	8.2 - 8.8	4 - 4.5	8.2 - 9.5
140	GM 181	L4	3.0 L	101.60	53.34	58.38	12.5-13.8	8.2 - 8.8	4 - 4.5	8.2 - 9.5
170-180-190-470	GM 224	L4	3.7 L	110.74	63.44	69.77				
165	GM 250	L6	4.0 L	98.42	50.80-53.34	58.38	12.5-13.8	8.2 - 8.8	4 - 4.5	8.2 - 9.5
175 - 205	GM 262	V6	4.3 L	101.60	57.14	62.19	8.8	8.2	6.2	9.5
898-200-228-230	GM 305	V8	5.0 L	95.00	53.34	62.19	8.8	8.2	6.2	9.5
250-260-270-280	GM 350	V8	5.7 L	101.60	53.34	62.19	8.8	8.2	6.2	9.5
300 - 320 - 350	GM 350	V8	5.7 L	101.60	53.34	62.19	8.8	8.2	6.2	9.5
6.2	GM 377	V8	6.2 L	101.60	53.34	62.19	1º ⇨ 3.5 2º ⇨ 6 3º ⇨ 9	10	1º ⇨ 2.7 Kg 2º ⇨ 45º	1º ⇨ 2K 2º ⇨ 73º 3º ⇨ 2K 4º ⇨ 43º 5º ⇨ 73º
325	GM 427	V8	7.0 L	108.00	55.88	69.81	10.8	6.2	6.8	10.8
330-370-400-425	GM 454	V8	7.4 L	108.00	55.88	69.81	10.8	6.2	6.8	10.8
8.1	GM 496	V8	8.1 L	108.00		69.81	1º ⇨ 3 kg 2º ⇨ 3 kg + 120º 3º ⇨ 60º 4º ⇨ 30º	10	1º ⇨ 3 Kg 2º ⇨ 90º	1º ⇨ 3k 2º ⇨ 90º 1º ⇨ 3k 2º ⇨ 80º
500 - 502	GM 502	V8	8.2 L	113.43	55.88	69.81	10.8	6.2	6.8	14.9
215 - 225 - 888	FD 302	V8	5.0 L	101.60	53.94	57.12	8.8-9.8	10.2 - 11.5	2.5 - 3.3	8.2 - 9.5
233 - 255	FD 351	V8	5.8 L	101.60	58.70	76.21	14.2-15.2	10.2 - 11.5	5.5 - 6	13 - 14
OMC										
120	GM 153	L4	2.5 L	98.42	50.80	58.38	12.5-13.8	8.2 - 8.8	4 - 4.5	8.2 - 9.5
140	GM 181	L4	3.0 L	101.60	53.34	58.38	12.5-13.8	8.2 - 8.8	4 - 4.5	8.2 - 9.5
165	GM 250	L6	4.0 L	98.42	50.80-53.34	58.38	12.5-13.8	8.2 - 8.8	4 - 4.5	8.2 - 9.5
155	GM 225	V6	3.6 L	95.25	50.80	63.50	9 - 11	6.2 - 6.9	4.2 - 5.5	13.2-16.5
170	GM 229	V6	3.8 L	95.00	53.34	62.19	8.8	8.2	6.2	9.5
175	GM 231	V6	3.8 L	96.52	57.14	63.50	8.8	8.2	6.2	9.5
205	GM 262	V6	4.3 L	101.60	57-14	62.19	8.8	8.2	6.2	9.5
185-200-210-220	GM 305	V8	5.0 L	95.00	53.34	62.19	8.8	8.2	6.2	9.5
250-260-270-290	GM 350	V8	5.7 L	101.60	53.34	62.19	8.8	8.2	6.2	9.5

MODELO MODEL MODELLO MODELE	BASE	CYL.	C.C.	Ø PISTÓN Ø PISTON Ø PISTONE Ø PISTON	COJINETE BIELA BEARING CONNECTING ROD BRONZINE BIELLA ROULEMENT DE BIELLE	COJINETE BANCADA BEARING CRANKSHAFT BRONZINE BANCO ROULEMENT DE VILEBREQUIN	APRIETE DE MOTOR kg/m | TORQUE ENGINE kg/m | DATI DI SERRAGGIO kg/m | SERRAGE DU MOTEUR kg/m			
							CULATA HEAD TESTATA CULASSE	VOLANTE FLYWHEEL VOLANO VOLANT	BIELA CONNECTING ROD BIELLA BIELLE	CIGÜEÑAL CRANKSHAFT ALBERO MOTORE VILEBREQUIN
310 - 330 - 335	GM 454	V8	7.4 L	108.00	55.88	69.81	10.8	6.2	6.8	10.8
160 - 175 - 190	FD 302	V8	5.0 L	101.60	53.94	57.12	8.8 - 9.8	10.2 - 11.5	2.5 - 3.3	8.2 - 9.5
235 - 240 - 250	FD 351	V8	5.8 L	101.60	58.70	76.21	14.2-15.2	10.2 - 11.5	5.5 - 6	13 - 14
295 - 340	FD 460	V8	7.5 L	110.70	63.24	75.95				
					VOLVO					
3.0GL - 3.0GS	GM 181	L4	3.0 L	101.60	53.34	58.38	12.5-13.8	8.2 - 8.8	4 - 4.5	8.2
155	GM 225	V6	3.6 L	95.25	50.80	63.50	9 - 11	6.2 - 6.9	4.2 - 4.5	13.2 - 16.5
175	GM 229	V6	3.8 L	95.00	53.34	62.19	8.8	8.2	6.2	9.5
205-431-432-434	GM 262	V6	4.3 L	101.60	57.14	62.19	8.8	8.2	6.2	9.5
200-211-225-231	GM 305	V8	5.0 L	95.00	53.34	62.19	8.8	8.2	6.2	9.5
500 - 501	GM 305	V8	5.0 L	95.00	53.34	62.19	8.8	8.2	6.2	9.5
255-260-261-271	GM 350	V8	5.7 L	101.60	53.34	62.19	8.8	8.2	6.2	9.5
280-290-311-570	GM 350	V8	5.7 L	101.60	53.34	62.19	8.8	8.2	6.2	9.5
740-7.4GL-7.4Gi	GM 454	V8	7.4 L	108.00	55.88	69.81	10.8	6.2	6.8	10.8
8.1	GM 496	V8	8.1 L	108.00		69.81	1° ⇨ 3 kg 2° ⇨ 3 kg + 120° 3° ⇨ 60° 4° ⇨ 30°	10	1° ⇨ 3 Kg 2° ⇨ 90°	1° ⇨ 3k 2° ⇨ 90° 1° ⇨ 3k 2° ⇨ 80°
8.2GL-8.2GSi	GM 502	V8	8.2 L	113.43	55.88	69.81	10.8	6.2	6.8	14.9
190-5.0FL-5.0Fi	FD 302	V8	5.0 L	101.60	53.94	57.12	8.8-9.8	10.2 - 11.5	2.5 - 3.3	8.2 - 9.5
240-5.8FL-5.8Fi	FD 351	V8	5.8 L	101.60	58.70	76.21	14.2-15.2	10.2 - 11.5	5.5 - 6	13 - 14
B 18		L 4	1.8 L	84.14	54.08	63.44	9	5	5.5	12.5
B 20		L 4	2.0 L	88.90	54.08	63.44	9	5	5.5	12.5
B 21		L 4	2.1 L	92.00	54.08	63.44	9	7.2	6.2	10.8
B 23		L 4	2.3 L	96.00	54.08	63.44	10.8	7.2	6.2	10.8
B 25		L 4	2.5 L	96.00	48.98	54.98	2+4+120°	7	2 + 90°	11
B 30		L 6	3.0 L	88.90	54.08	63.44	9	5	5.5	12.5
MD 1 A		L 1	0.445 L	79.37						
MD 1 B		L 1	0.560 L	88.90	53.96	66.64	11	70	6.5	4.5
MD 2 A		L 2	0.890 L	79.37						
MD 2 B		L 2	1.12 L	88.90	53.96	66.64	11	70	6.5	4.5
MD 3 B		L 3	1.168 L	88.90	53.96	66.64	11	70	6.5	4.5
MD 5		L 1	0.443 L	84.00	51.00	54.00	7	50	7	7
MD 6		L 2	0.631 L	70.00	50.00	50.00	7	18	5	5
MD 7 A		L 2	0.744 L	76.00	50.00	50.00	7	18	5	5
MD 7 B		L 2	0.744 L	76.00	50.00	50.00	7	18	5	5
MD 11		L 2	1.12 L	88.90	53.96	66.64	11	50	6.5	4.5
MD 17		L 3	1.68 L	88.90	53.96	66.64	11	59	6.5	4.5
MD 21		L 4	2.112 L	90.00	49.99	55/55.19	7	6.5	6	10
D 30		L 4	2.39 L	92.00	56.48	69.98	13	11.5	11.3	14
D 31		L 4	2.39 L	92.00	56.48	69.98	13	11.5	11.3	14
D 32		L 6	3.17 L	90.00	49.99	55/55.19	7	6.5	6	10
D 40		L 6	3.59 L	92.00	56.48	69.98	13	11.5	11.3	14
D 41		L 6	3.59 L	92.00	56.48	69.98	13	11.5	11.3	14
D 42		L 6	3.59 L	92.00	56.48	69.98	13	11.5	11.3	14
2001		L 1	0.43 L	79.00	48.00	60.00	2 - 7	6.5	7	2 - 6
2002		L 2	852	79.00	48.00	60.00	2 - 7	6.5	7	2 - 6
2003		L 3	1.278 L	79.00	48.00	60.00	2 - 7	6.5	7	2 - 6
2003 T		L 3	1.278 L	79.00	48.00	60.00	2 - 7	6.5	7	2 - 6
D1-13A		2	0,51L	67		23	36,5	74	23	27
D1-20A		3	0,76L	67		23	36,5	74	23	27
D1-30A		3	1,13L	77		23	51	74	32	27
D2-40A		4	1,51L	77		23	51	74	32	27
MD2010		2	0,45L	67	21-26	25-30	35-40	70-80		
MD2020		3	0,68L	67	21-26	25-30	35-40	70-80		
MD2030		3	0,95L	75	30-35	25-30	50-53	60-70		
MD2040		3	1,50L	84	50-55	50-55	90-95	60-70		
D2-55/75		4	2,2L	84	49-54	49-54	98-103	69-78		
D3		5	2,4L	81			50 + 90°+ 90°	45 + 65°		
D4		4	3,67	103			150 + 180° + 90°	100 + 45°	65 + 90°	
D5		4	4,76	108		50+60°+60°	130 + 90°	30+60°+60°		30+ 60° + 60°
D6		6	5,5	103			150 + 180° + 90°	100 + 45°	65 + 90°	
D7		6	7,15	108		50+60°+60°	130 + 90°	30+60°+60°		30+ 60° + 60°

GM

BASE MOTORES GM NUEVOS | GM BASE NEW ENGINES | BASE MOTORE GM NUOVO | MOTEURS BASE GM NEUF

181 STANDARD
3.0 L & 3.0 LX

REF	OEM
RECGM181	MERCRUISER: 864626A01, 864626A02 VOLVO PENTA: 3857760 OMC CRUSADER INDMAR (1991+)



	CUBICAJE	DISPLACEMENT	CILINDRATA	CYLINDRÉE	3.0L (181 CID)
	POTENCIA CIGÜEÑAL	HORSE POWER	POTENZA ALL'ALBERO MOTORE	PUISSANCE AU VILEBREQUIN	140 HP @ 4800 rpm
	TORSIÓN	TORQUE	TORCENTE	COUPLE	117 lb-ft @ 3600 rpm
	RETÉN CIGÜEÑAL	REAR MAIN SEAL	PARAOLIO POST. ALBERO MOTORE	JOINT AR DE VILEBREQUIN	1
	ROTACIÓN	ROTATION	ROTAZIONE	ROTATION	Standard
	CILINDROS	CYLINDER	CILINDRI	CYLINDRES	4 Inline Standard
	ORDEN DE ENCENDIDO	FIRING ORDER	ORDINE DI ACCENSIONE	ORDRE D'ALLUMAGE	1-3-4-2
	CAPACIDAD CARTER ACEITE	OIL PAN CAPACITY	COPPA L'OLIO CAPACITÀ	CAPACITÉ DU CARTER D'HUILE	4 quarts
	TIPO ACEITE	OIL TYPE	TIPO OLIO	TYPE D'HUILE	SAE 15W40
	Todos los componentes internos	All internal components	Tutti i componenti interni	Tous les composants internes	
	Harmonic Balancer	Harmonic Balancer	Harmonic Balancer	Balancier d'équilibrage	
	Culata	Cylinder Head	Testata	Culasse	
	Tapa válvulas	Valve Cover	Coperchio punterie	Cache-culbuteurs	
	Tapa distribución	Timing Cover	Coperchio distribuzione	Couvercle de distribution	
	Cárter de aceite	Oil Pan	Coppa dell'olio	Carter d'huile	
	Para substituir a los motores anteriores a 1989, con retén de cigüeñal de 2 piezas y con volante de menos diámetro, debemos substituir el motor de arranque y el acoplamiento del motor	To replace the engines before 1989 with 2 pieces crankshaft seal and flywheel of less diameter, you must substitute the starter and the drive plate of the engine	Per sostituire i motori precedenti al 1989, con paraolio albero motore in 2 pz, e volano di dimensioni più piccole, bisogna sostituire il motorino d'avviamento e l'accoppiamento del motore.	Pour remplacer les moteurs antérieurs à 1989 dotés de joints de vilebrequin en deux parties et de diamètres de volant plus petits, il faut remplacer le démarreur et l'accouplement du moteur.	
	BOMBA DE AGUA	WATER PUMP	POMPA ACQUA	POMPE À EAU	REC46-8M0113733
	JUNTA ESCAPE	EXHAUST GASKET	GUARNIZIONE SCARICO	JOINT D'ECHAPPEMENT	REC27-815528
	BUJÍAS	SPARK PLUG	CANDELA	BOUGIE	NGKBPR6EFS
	JUNTA TERMOSTATO	THERMOSTAT GASKET	GUARNIZIONE TERMOSTATO	JOINT DE THERMOSTAT	REC27-8146801

P. 22

Incluido	Included	Incluso	Comprend
Atención	Atention	Atenzione	Atention
Recomendado	Recommended	Consigliato	Recommandé

4.3L - 4.3GXI & 4.3L MPI
VORTEC 4.3 (2008-15)

REF	OEM
RECGM262VORTEC	MERCUISER: 879150A31 VOLVO: 3801555 OMC CRUSADER INDMAR (2008+)



	CUBICAJE	DISPLACEMENT	CILINDRATA	CYLINDRÉE	4.3L (262 CID)
	POTENCIA CIGÜEÑAL	HORSE POWER	POTENZA ALL'ALBERO MOTORE	PUISSANCE AU VILEBREQUIN	223 HP @ 4800 rpm
	TORSIÓN	TORQUE	TORCENTE	COUPLE	267 lb-ft @ 2800 rpm
	RETÉN CIGÜEÑAL	REAR MAIN SEAL	PARAOLIO POST. ALBERO MOTORE	JOINT AR DE VILEBREQUIN	1
	CIGÜEÑAL	CRANK SHAFT	ALBERO MOTORE	VILEBREQUIN	Remanufact.
	TORNILLOS COLECTOR ADMISIÓN	INTAKE MANIFOLD, BOLTS	VITI COLLETTORE ASPIRAZIONE	VIS COLLECTEUR ADMISSION	8
	ROTACIÓN	ROTATION	ROTAZIONE	ROTATION	Standard
	CILINDROS	CYLINDER	CILINDRI	CYLINDRES	90º V6 Standard
	ORDEN DE ENCENDIDO	FIRING ORDER	ORDINE DI ACCENSIONE	ORDRE D'ALLUMAGE	1-6-5-4-3-2
	CAPACIDAD CARTER ACEITE	OIL PAN CAPACITY	COPPA L'OLIO CAPACITÀ	CAPACITÉ DU CARTER D'HUILE	4.5 quarts
	TIPO ACEITE	OIL TYPE	TIPO OLIO	TYPE D'HUILE	SAE 15W40
	Nº BLOQUE	BLOCK CASTING NUMBER	NUM. BLOCCO	NUM. BLOC	2600234/324
	Nº CULATA	HEAD CASTING NUMBER	NUM. TESTA	NUM. CULASSE	12557113/12558114
	Todos los componentes internos	All internal components	Tutti i componenti interni	Tous les composants internes	
	Tapa válvulas	Valve Cover	Coperchio punterie	Cache culbuteurs	
	Tapa distribución aluminio	Timing Cover aluminium	Coperchio distribuzione in alluminio	Carter de distribution AL	
	Eje equilibrado	Balance shaft	Asse bilanciato	Arbre d'équilibrage	
	Cárter de aceite	Oil Pan	Coppa dell'olio	Carter d'huile	
	El colector de admisión de este motor está fijado a las culatas con 8 tornillos. Si el motor a substituir tiene 12 tornillos se debe ordenar: **MP425036** Colector admisión carburador 4 cuerpos. o **MP425024** Colector admisión carburador 2 cuerpos + **MP001204** Tornillos colector **NO SUSTITUYE BLOQUES 090, 090M**	The intake manifold in this engine is fixed to the heads with 8 screws. If the engine to substitute have 12 screws, you must order: **MP425036** Intake manifold carburetor 4 bbl. or **MP425024** Intake manifold carburetor 2 bbl. + **MP001204** Bolts for intake manifold **DOES NOT REPLACE BLOCKS 090, 090M**	Il collettore d'aspirazione di questo motore va montato con 8 viti. Nel caso il vecchio motore avesse montato il modello con 12 viti, bisognerà ordinare: **MP425036** Collet. aspirazione carburatore a 4 corpi. o **MP425024** Collet. aspirazione carburatore a 2 corpi + **MP001204** Viteria collettore **NON SOSTITUISCE BLOCCHI 090, 090M**	Le collecteur d'admission de ce moteur est fixé aux culasses par 8 boulons. Si le moteur à remplacer comporte 12 boulons, il faut le commander : **MP425036** Collecteur d'admission carburateur 4 corps. o **MP425024** Collecteur d'admission carburateur 2 corps + **MP001204** Vis de collecteur. **NE REMPLACE PAS LES BLOCS 090, 090M**	
	BOMBA DE AGUA	WATER PUMP	POMPA ACQUA	POMPE A EAU	**REC879194401**
	JUNTA ESCAPE	EXHAUST GASKET	GUARNIZIONE SCARICO	JOINT D'ECHAPPEMENT	**REC27-99757**
	JUNTA COLECTOR ADMISIÓN	GASKET: INTAKE MANIFOLD	GUARNIZIONE: COLLETTORE ASPIRAZIONE	KIT JOINTS COLLECTEUR ADMISSION	**REC824326002**
	BUJÍAS	SPARK PLUG	CANDELA	BOUGIE	**NGKBPR6EFS**

P. 22

VORTEC 5.0L (1996+)

REF	OEM
RECGM305VORTEC	MERCUISER VOLVO OMC CRUSADER COBRA



	CUBICAJE	DISPLACEMENT	CILINDRATA	CYLINDRÉE	5.0L (305 CID)
	POTENCIA CIGÜEÑAL	HORSE POWER	POTENZA ALL'ALBERO MOTORE	PUISSANCE AU VILEBREQUIN	250 HP@4800rpm (4bbl carburated)
	TORSIÓN	TORQUE	TORCENTE	COUPLE	305 lb-ft @3600rpm
	RETÉN CIGÜEÑAL	REAR MAIN SEAL	PARAOLIO POST. ALBERO MOTORE	JOINT AR DE VILEBREQUIN	1
	TORNILLOS COLECTOR ADMISIÓN	INTAKE MANIFOLD, BOLTS	VITI COLLETTORE ASPIRAZIONE	VIS COLLECTEUR ADMISSION	8
	ROTACIÓN	ROTATION	ROTAZIONE	ROTATION	Standard
	CILINDROS	CYLINDER	CILINDRI	CYLINDRES	90º V8 Standard
	RATIO COMPRESIÓN	COMPRESSION RATIO	RAPPORTO DI COMPRESSIONE	RAPPORT DE COMPRESSION	9:4:1
	ORDEN DE ENCENDIDO	FIRING ORDER	ORDINE DI ACCENSIONE	ORDRE D'ALLUMAGE	1-8-4-3-6-5-7-2
	CAPACIDAD CARTER ACEITE	OIL PAN CAPACITY	COPPA L'OLIO CAPACITÀ	CAPACITÉ CARTER D'HUILE	5.5 quarts
	TIPO ACEITE	OIL TYPE	TIPO OLIO	TYPE D'HUILE	SAE 15W40
	Todos los componentes internos	All internal components	Tutti i componenti interni	Tous les composants internes	
	Tapa válvulas	Valve Cover	Coperchio punterie	Cache culbuteurs	
	Tapa distribución	Timing Cover	Coperchio distribuzione	Carter de distribution	
	Eje equilibrado	Harmonic balancer	Asse bilanciato	Arbre d'équilibrage	
	BOMBA DE AGUA	WATER PUMP	POMPA ACQUA	POMPE A EAU	**REC46-8M0113734**
	JUNTA ESCAPE	EXHAUST GASKET	GUARNIZIONE SCARICO	JOINT D'ECHAPPEMENT	**REC27-33395**
	JUNTA ADMISIÓN	INTAKE GASKET	GUARNIZIONE ASPIRAZIONE	JOINT	**REC27-807473A1**
	BUJÍAS	SPARK PLUG	CANDELA	BOUGIE	**NGKBPR6EFS**
	COLECTOR ADMISIÓN 4 CUERPOS	INTAKE MANIFOLD 4BBL	COLLETTORE ASPIRAZIONE 4 CORPI	COLLECTEUR ADMISSION 4 CORPS	**REC425062**

P. 22

5.7L CARB (1967-85) LONG BLOCK

REF	OEM
RECGM350	MERCUISER VOLVO OMC CRUSADER COBRA



	CUBICAJE	DISPLACEMENT	CILINDRATA	CYLINDRÉE	5.7L (350 CID)
	POTENCIA CIGÜEÑAL	HORSE POWER	POTENZA ALL'ALBERO MOTORE	PUISSANCE AU VILEBREQUIN	260 HP@4400rpm
	TORSIÓN	TORQUE	TORCENTE	COUPLE	350 lb-ft @3600rpm
	RETÉN CIGÜEÑAL	REAR MAIN SEAL	PARAOLIO POST. ALBERO MOTORE	JOINT AR DE VILEBREQUIN	2
	TORNILLOS COLECTOR ADMISIÓN	INTAKE MANIFOLD, BOLTS	VITI COLLETTORE ASPIRAZIONE	VIS COLLECTEUR ADMISSION	12
	ROTACIÓN	ROTATION	ROTAZIONE	ROTATION	STD
	CILINDROS	CYLINDER	CILINDRI	CYLINDRES	90º V8
	ORDEN DE ENCENDIDO	FIRING ORDER	ORDINE DI ACCENSIONE	ORDRE D'ALLUMAGE	1-8-4-3-6-5-7-2
	BOMBA COMBUSTIBLE MECÁNICA	MECHANICAL FUEL PUMP	POMPA COMBUSIBILE MECCANICA	POMPE A CARBURANT MECANIQUE	✓
	ÁRBOL DE LEVAS PLANO	FLAT CAMSHAFT	ALBERO A CAMME PIATTO	ARBRE À CAMES PLAT	
	CAPACIDAD CARTER ACEITE	OIL PAN CAPACITY	COPPA L'OLIO CAPACITÀ	CAPACITÉ CARTER D'HUILE	5.5 quarts
	TIPO ACEITE	OIL TYPE	TIPO OLIO	TYPE D'HUILE	SAE 15W40
	Todos los componentes internos	All internal components	Tutti i componenti interni	Tous les composants internes	
	Tapa válvulas	Valve Cover	Coperchio punterie	Cache culbuteurs	
	Tapa distribución	Timing Cover	Coperchio distribuzione	Carter de distribution	
	Carter de aceite	Oil pan	Coppa dell'olio	Carter d'huile	
	BOMBA DE AGUA	WATER PUMP	POMPA ACQUA	POMPE A EAU	**REC46-8M0113734**
	JUNTA ESCAPE	EXHAUST GASKET	GUARNIZIONE SCARICO	JOINT D'ECHAPPEMENT	**REC27-33395**
	JUNTA ADMISIÓN	INTAKE GASKET	GUARNIZIONE ASPIRAZIONE	JOINT	**REC17320**
	BUJÍAS	SPARK PLUG	CANDELA	BOUGIE	**NGKBR6FS**

P. 22

5.7L (1986-95)
CARB / TBI

REF	OEM
RECGM350PREVORTEC	MERCUISER: 807447R2, 807447R50 VOLVO OMC CRUSADER VOLVO: 856706, 856901



	CUBICAJE	DISPLACEMENT	CILINDRATA	CYLINDRÉE	5.7L (350 CID)
	POTENCIA CIGÜEÑAL	HORSE POWER	POTENZA ALL'ALBERO MOTORE	PUISSANCE AU VILEBREQUIN	270 HP@4800rpm
	TORSIÓN	TORQUE	TORCENTE	COUPLE	340 lb-ft @3200rpm
	RETÉN CIGÜEÑAL	REAR MAIN SEAL	PARAOLIO POST. ALBERO MOTORE	JOINT AR DE VILEBREQUIN	1
	TORNILLOS COLECTOR ADMISIÓN	INTAKE MANIFOLD, BOLTS	VITI COLLETTORE ASPIRAZIONE	VIS COLLECTEUR ADMISSION	12
	ROTACIÓN	ROTATION	ROTAZIONE	ROTATION	Standard
	CILINDROS	CYLINDER	CILINDRI	CYLINDRES	90º V8 standard
	RATIO COMPOSICIÓN	COMPOSITION RATIO	RAPPORTO DI COMPOSIZIONE	TAUX DE COMPRESSION	9:1:4
	ORDEN DE ENCENDIDO	FIRING ORDER	ORDINE DI ACCENSIONE	ORDRE D'ALLUMAGE	1-8-4-3-6-5-7-2
	ÁRBOL DE LEVAS PLANO	FLAT CAMSHAFT	ALBERO A CAMME PIATTO	ARBRE À CAMES PLAT	
	CAPACIDAD CARTER ACEITE	OIL PAN CAPACITY	COPPA L'OLIO CAPACITÀ	CAPACITÉ CARTER D'HUILE	5.5 quarts
	TIPO ACEITE	OIL TYPE	TIPO OLIO	TYPE D'HUILE	SAE 15W40
	Todos los componentes internos	All internal components	Tutti i componenti interni	Tous les composants internes	
	Tapa válvulas	Valve Cover	Coperchio punterie	Cache culbuteurs	
	Tapa distribución	Timing Cover	Coperchio distribuzione	Carter de distribution	
	Carter de aceite	Oil pan	Coppa dell'olio	Carter d'huile	
	BOMBA DE AGUA	WATER PUMP	POMPA ACQUA	POMPE A EAU	REC46-8M0113734
	JUNTA ESCAPE	EXHAUST GASKET	GUARNIZIONE SCARICO	JOINT D'ECHAPPEMENT	REC27-33395
	JUNTA ADMISIÓN	INTAKE GASKET	GUARNIZIONE ASPIRAZIONE	JOINT	REC17320
	BUJÍAS	SPARK PLUG	CANDELA	BOUGIE	NGKBR6FS

P. 22

5.7L VORTEC (1996+)
CARB / TBI

REF	OEM
RECGM350VORTEC	MERCUISER: 863661A1, 8M0088397 VOLVO: 3801411, 3801529 OMC CRUSADER



	CUBICAJE	DISPLACEMENT	CILINDRATA	CYLINDRÉE	5.7L (350 CID)
	POTENCIA CIGÜEÑAL	HORSE POWER	POTENZA ALL'ALBERO MOTORE	PUISSANCE AU VILEBREQUIN	330 HP@4800rpm
	TORSIÓN	TORQUE	TORCENTE	COUPLE	355 lb-ft @3600rpm (4 BBL carb.)
	RETÉN CIGÜEÑAL	REAR MAIN SEAL	PARAOLIO POST. ALBERO MOTORE	JOINT AR DE VILEBREQUIN	1
	TORNILLOS COLECTOR ADMISIÓN	INTAKE MANIFOLD, BOLTS	VITI COLLETTORE ASPIRAZIONE	VIS COLLECTEUR ADMISSION	8
	ROTACIÓN	ROTATION	ROTAZIONE	ROTATION	Standard
	CILINDROS	CYLINDER	CILINDRI	CYLINDRES	90º V8 Standard
	RATIO COMPOSICIÓN	COMPOSITION RATIO	RAPPORTO DI COMPOSIZIONE	TAUX DE COMPRESSION	9:1:4
	ORDEN DE ENCENDIDO	FIRING ORDER	ORDINE DI ACCENSIONE	ORDRE D'ALLUMAGE	1-8-4-3-6-5-7-2
	BOMBA COMBUSTIBLE ELÉCTRICA	ELECTRIC FUEL PUMP	POMPA COMBUSIBILE ELETRICA	POMPE A CARBURANT ELECTRIQUE	✓
	SENSOR DE CIGÜEÑAL	CRANK SHAFT SENDER	SENSORE ALBERO MOTORE	SONDE DE VILEBREQUIN	✓
	ÁRBOL DE LEVAS DE RODILLOS HIDRÁULICOS	HYDRAULIC ROLLER CAMSHAFT	ALBERO A CAMME DEL RULLO IDRAULICO	ARBRE À CAMES À ROULEAUX HYDRAULIQUES	
	CAPACIDAD CARTER ACEITE	OIL PAN CAPACITY	COPPA L'OLIO CAPACITÀ	CAPACITÉ CARTER D'HUILE	5.5 quarts
	TIPO ACEITE	OIL TYPE	TIPO OLIO	TYPE D'HUILE	SAE 15W40
	Todos los componentes internos	All internal components	Tutti i componenti interni	Tous les composants internes	
	Tapa válvulas	Valve Cover	Coperchio punterie	Cache culbuteurs	
	Tapa distribución de composite	Composite timing Cover	Coperchio distribuzione composite	Carter de distribution composite	
	Carter de aceite	Oil pan	Coppa dell'olio	Carter d'huile	
	Para motores MPI pedir la ref. REC15254 Tapa distribucion con sensor	**For engine MPI order ref. REC15254 Timing cover with sensor**	**Per motori MPI aggiungere la ref. REC15254 Coperchio distribuzione con sensore**	**Pour moteurs MPI il faut la ref REC15254. Couvercle distributeur avec senseur.**	
	BOMBA DE AGUA	WATER PUMP	POMPA ACQUA	POMPE A EAU	REC46-8M0113734
	JUNTA ESCAPE	EXHAUST GASKET	GUARNIZIONE SCARICO	JOINT D'ECHAPPEMENT	REC27-33395
	JUNTA ADMISIÓN	INTAKE GASKET	GUARNIZIONE ASPIRAZIONE	JOINT	REC27-807473A1
	BUJÍAS	SPARK PLUG	CANDELA	BOUGIE	NGKBPR6EFS

P. 22

5.7L MPI (1996+)



REF	OEM
RECGM350MPI	MERCUISER: 800-866138A03 VOLVO: 3862058 OMC CRUSADER

CUBICAJE	DISPLACEMENT	CILINDRATA	CYLINDRÉE	5.7L (350 CID)
POTENCIA CIGÜEÑAL	HORSE POWER	POTENZA ALL'ALBERO MOTORE	PUISSANCE AU VILEBREQUIN	350 HP@4500rpm (4 BBL carb.)
TORSIÓN	TORQUE	TORCENTE	COUPLE	425 lb-ft @3600rpm
RETÉN CIGÜEÑAL	REAR MAIN SEAL	PARAOLIO POST. ALBERO MOTORE	JOINT AR DE VILEBREQUIN	1
TORNILLOS COLECTOR ADMISIÓN	INTAKE MANIFOLD, BOLTS	VITI COLLETTORE ASPIRAZIONE	VIS COLLECTEUR ADMISSION	4
ROTACIÓN	ROTATION	ROTAZIONE	ROTATION	Standard
CILINDROS	CYLINDER	CILINDRI	CYLINDRES	90º V8 Standard
RATIO COMPOSICIÓN	COMPOSITION RATIO	RAPPORTO DI COMPOSIZIONE	TAUX DE COMPRESSION	9:4:1
ORDEN DE ENCENDIDO	FIRING ORDER	ORDINE DI ACCENSIONE	ORDRE D'ALLUMAGE	1-8-4-3-6-5-7-2
BOMBA COMBUSTIBLE ELÉCTRICA	ELECTRIC FUEL PUMP	POMPA COMBUSIBILE ELETRICA	POMPE A CARBURANT ELECTRIQUE	✓
SENSOR DE CIGÜEÑAL	CRANK SHAFT SENDER	SENSORE ALBERO MOTORE	SONDE DE VILEBREQUIN	✓
COLECTOR ADMISIÓN 8 TORNILLOS	8 BOLT STYLE INTAKE MANIFOLD	COLLETTORE ASPIRAZIONE 8 BULLONI	COLLECTEUR ADMMISSION 8 VIS	MultiPort injection
CAPACIDAD CARTER ACEITE	OIL PAN CAPACITY	COPPA L'OLIO CAPACITÀ	CAPACITÉ CARTER D'HUILE	5.5 quarts
TIPO ACEITE	OIL TYPE	TIPO OLIO	TYPE D'HUILE	SAE 15W40
Todos los componentes internos	All internal components	Tutti i componenti interni	Tous les composants internes	
Tapa válvulas	Valve Cover	Coperchio punterie	Cache culbuteurs	
Tapa distribución de composite	Composite timing Cover	Coperchio distribuzione composite	Carter de distribution composite	
Carter de aceite	Oil pan	Coppa dell'olio	Carter d'huile	

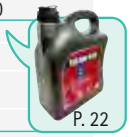

P. 22

Requiere sensor de cigüeñal	Crank position required	Richiede l'uso sensore di posizione dell'albero motore	Capteur de vilebrequin requis

BOMBA DE AGUA	WATER PUMP	POMPA ACQUA	POMPE A EAU	REC46-8M0113734
JUNTA ESCAPE	EXHAUST GASKET	GUARNIZIONE SCARICO	JOINT D'ECHAPPEMENT	REC27-33395
JUNTA ADMISIÓN	INTAKE GASKET	GUARNIZIONE ASPIRAZIONE	JOINT	REC27-807473A1
BUJÍAS	SPARK PLUG	CANDELA	BOUGIE	NGKBPR6EFS

6.2L (1996+)



REF	OEM
RECGM6.2MPI	MERCUISER: 865108A02

CUBICAJE	DISPLACEMENT	CILINDRATA	CYLINDRÉE	6.2L MAG (377 CID)
POTENCIA CIGÜEÑAL	HORSE POWER	POTENZA ALL'ALBERO MOTORE	PUISSANCE AU VILEBREQUIN	355 HP@4500rpm (4 BBL carb.)
TORSIÓN	TORQUE	TORCENTE	COUPLE	425 lb-ft @3600rpm
RETÉN CIGÜEÑAL	REAR MAIN SEAL	PARAOLIO POST. ALBERO MOTORE	JOINT AR DE VILEBREQUIN	1
TORNILLOS COLECTOR ADMISIÓN	INTAKE MANIFOLD, BOLTS	VITI COLLETTORE ASPIRAZIONE	VIS COLLECTEUR ADMISSION	8
ROTACIÓN	ROTATION	ROTAZIONE	ROTATION	Standard
CILINDROS	CYLINDER	CILINDRI	CYLINDRES	90º V8 Standard
RATIO COMPOSICIÓN	COMPOSITION RATIO	RAPPORTO DI COMPOSIZIONE	TAUX DE COMPRESSION	9:4:1
ORDEN DE ENCENDIDO	FIRING ORDER	ORDINE DI ACCENSIONE	ORDRE D'ALLUMAGE	1-8-4-3-6-5-7-2
LIFTERS HIDRÁULICOS	HYDRAULIC LIFTER	SOLLEVATORE IDRAULICO	LIFTER HYDRAULIQUE	✓
SENSOR DE CIGÜEÑAL	CRANK SHAFT SENDER	SENSORE ALBERO MOTORE	SONDE DE VILEBREQUIN	✓
COLECTOR ADMISIÓN 8 TORNILLOS	8 BOLT STYLE INTAKE MANIFOLD	COLLETTORE ASPIRAZIONE 8 BULLONI	COLLECTEUR ADMMISSION 8 VIS	MultiPort injection
CAPACIDAD CARTER ACEITE	OIL PAN CAPACITY	COPPA L'OLIO CAPACITÀ	CAPACITÉ CARTER D'HUILE	5.5 quarts
TIPO ACEITE	OIL TYPE	TIPO OLIO	TYPE D'HUILE	SAE 15W40
Todos los componentes internos	All internal components	Tutti i componenti interni	Tous les composants internes	
Tapa válvulas	Valve Cover	Coperchio punterie	Cache culbuteurs	
Tapa distribución de composite	Composite timing Cover	Coperchio distribuzione compostie	Carter de distribution composite	
Carter de aceite	Oil pan	Coppa dell'olio	Carter d'huile	

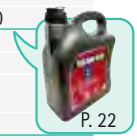

P. 22

Requiere sensor de cigüeñal	Crank position required	Richiede l'uso sensore di posizione dell'albero motore	Capteur de vilebrequin requis

BOMBA DE AGUA	WATER PUMP	POMPA ACQUA	POMPE A EAU	REC46-8M0113734
JUNTA ESCAPE	EXHAUST GASKET	GUARNIZIONE SCARICO	JOINT D'ECHAPPEMENT	REC27-33395
JUNTA ADMISIÓN	INTAKE GASKET	GUARNIZIONE ASPIRAZIONE	JOINT	REC27-807473A1
BUJÍAS	SPARK PLUG	CANDELA	BOUGIE	NGKBPR6EFS

7.4L (1991+)
CARB / MPI BIG BLOCK

REF
RECGM454



	CUBICAJE	DISPLACEMENT	CILINDRATA	CYLINDRÉE	7.4L (454 CID)
	POTENCIA CIGÜEÑAL	HORSE POWER	POTENZA ALL'ALBERO MOTORE	PUISSANCE AU VILEBREQUIN	310 HP@5000rpm
	TORSIÓN	TORQUE	TORCENTE	COUPLE	404 lb-ft @3800rpm MPI
	RETÉN CIGÜEÑAL	REAR MAIN SEAL	PARAOLIO POST. ALBERO MOTORE	JOINT AR DE VILEBREQUIN	1
	TORNILLOS COLECTOR ADMISIÓN	INTAKE MANIFOLD, BOLTS	VITI COLLETTORE ASPIRAZIONE	VIS COLLECTEUR ADMISSION	16
	ROTACIÓN	ROTATION	ROTAZIONE	ROTATION	STD
	CILINDROS	CYLINDER	CILINDRI	CYLINDRES	90º V8
	RATIO COMPOSICIÓN	COMPOSITION RATIO	RAPPORTO DI COMPOSIZIONE	TAUX DE COMPRESSION	9.6:1
	ORDEN DE ENCENDIDO	FIRING ORDER	ORDINE DI ACCENSIONE	ORDRE D'ALLUMAGE	1-8-4-3-6-5-7-2
	ÁRBOL DE LEVAS DE RODILLOS	ROLLER CAMSHAFT	ALBERO A CAMME DEL RULLO	ARBRE À CAMES À ROULEAUX	✓
	CABEZAS DE PUERTO OVALADO	OVAL PORT HEADS	TESTE CON ATTACCO OVALE	TÊTES À PORT OVALE	✓ L29
	CAPACIDAD CARTER ACEITE	OIL PAN CAPACITY	COPPA L'OLIO CAPACITÀ	CAPACITÉ CARTER D'HUILE	8 quarts
	TIPO ACEITE	OIL TYPE	TIPO OLIO	TYPE D'HUILE	SAE15W40
	Todos los componentes internos	All internal components	Tutti i componenti interni	Tous les composants internes	
	Tapa válvulas	Valve Cover	Coperchio punterie	Cache culbuteurs	
	Tapa distribución frontal	Front timing cover	Coperchio distribuzione frontale	Carter de distribution	
	Eje equilibrado	Balance shaft	Asse bilanciato	Arbre d'équilibrage	
	Carter de aceite	Oil pan	Coppa dell'olio	Carter d'huile	

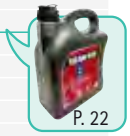

P. 22

Con carburación se necesita un estrangulador eléctrico.	Carburetor applications need an electric choke	Con la carburazione, è necessario uno starter elettrico.	Avec un carburateur, un starter électrique est nécessaire.	
BOMBA DE AGUA	WATER PUMP	POMPA ACQUA	POMPE A EAU	REC46-8M0113735
JUNTA ESCAPE	EXHAUST GASKET	GUARNIZIONE SCARICO	JOINT D'ECHAPPEMENT	REC27-46820
JUNTA ADMISIÓN	INTAKE GASKET	GUARNIZIONE ASPIRAZIONE	JOINT	REC17340
BUJÍAS	SPARK PLUG	CANDELA	BOUGIE	NGKBPR6EFS

CULATAS GM NUEVOS · GM BASE NEW CYLINDER HEADS · TESTATA GM NUOVO · CULASSES GM NEUVES

3.0 L (1991+)
CASTING #1408620 & #93441744

REF	
REC936-810849	REC17000



Válvulas & muelles	Valves & spring	Valvole e molle	soupapes et ressorts	✓

4.3L (1996+)
4.3L V6 CHEVY VORTEC

REF	
REC3861911	REC17010





ESTILO ATORNILLADO	BOLT DOWN STYLE	STILE BULLONE	STYLE BOULONNÉ	10 mm
TORNILLOS ADMISIÓN	BOLT INTAKE	VITI ASPIRAZIONE	VIS ADMISSION	8
Válvulas & muelles	Valves & spring	Valvole e molle	soupapes et ressort	✓

5.7L (1969-86)
V8 CHEVY PREVORTEC

REF	
REC938-7499	REC17030



	ESTILO ATORNILLADO	BOLT DOWN STYLE	STILE BULLONE	STYLE BOULONNÉ	10 mm
	TORNILLOS ADMISIÓN	BOLT INTAKE	VITI ASPIRAZIONE	VIS ADMISSION	12
	TAPA DE VÁLVULAS CON TORNILLOS DE PERÍMETROS	PERIMETER BOLT VALVE COVERS	COPERCHIO DELLA VALVOLA CON VITI PERIMETRALI	CACHE CULBUTEUR AVEC VIS PÉRIMÈTRE	✓
	Válvulas & muelles	Valves & spring	Valvole e molle	soupapes et ressorts	✓

5.0L (1996+)
V8 305 CHEVY VORTEC

REF	
REC938-8M0087884	REC17020





	TORNILLOS ADMISIÓN	BOLT INTAKE	VITI ASPIRAZIONE	VIS	8
	Válvulas & muelles	Valves & spring	Valvole e molle	soupapes et ressorts	✓

5.7L & 6.2L (1996+) V8
5.7L 350CI CHEVY VORTEC

REF	
REC938-803860T	REC17030





	TORNILLOS ADMISIÓN	BOLT INTAKE	VITI ASPIRAZIONE	VIS	8
	Válvulas & muelles	Valves & spring	Valvole e molle	soupapes et ressorts	✓

GM & FORD

BLOQUES Y CULATAS REMANUFACTURADOS

Si necesita un motor que no esté en nuestra lista, por favor llámenos. Los números de fundición en bloque y culatas nos ayudarán a suministarles exactamente sus necesidades.

Características:
- 12 meses Garantía limitada
- Pistones y aros nuevos
- Levas y lifters marinos
- Tapones de expansión de latón
- Cojinetes nuevos cigüeñal, biela y levas
- Cadena y piñones distribución nuevas
- Bomba de aceite nueva
- Juego de juntas marinas nuevo
- Bloque rectificado y calibrado
- Cigüeñal reacondicionado
- Bielas reacondicionadas
- Culatas rectificadas
- Muelles de válvulas nuevos
- Prueba de giro
- Prueba de presión

REMANUFACTURED LONG BLOCKS & CYLINDER HEADS

If you need an engine that is not listed in our catalog, please call us. Cylinder head, and block casting numbers will assist us in supplying your exact needs.

Engine Features:
- 12-month limited warranty
- New pistons, moly rings
- Marine cam and lifters
- Brass block plugs
- New rod, main and cam bearings
- New h.D. Timing chain and gears
- New oil pump
- New marine gasket set
- Block resurfaced, bored and honed
- Crankshaft reconditioned
- Connecting rods reconditioned
- Heads resurfaced
- New valve springs
- Spin tested
- Pressure tested

BLOCCHI E TESTATE RIGENERATI

Se necessita un motore che non si trova nella lista, non dubiti nel contattarci, i numeri di fusione del blocco e delle testate ci aiuteranno a identificare il modello corretto.

Caratteristiche:
- 12 mesi Garanzia limitata
- Pistoni e fasce nuove
- Bilanceri e Lifters Marini
- Tappi di dilatazione in bronzo
- Cuscinetti nuovi albero motore
- Catena e pignoni distribuzione nuovi
- Pompa dell'olio nuova
- Kit guarnizioni motore nuove
- Blocco rettificato e calibrato
- Albero motore rigenerato
- Bielle rigenerate
- Testate rigenerate
- Molle valvole nuove
- Testato e fatto girare a motore spento
- Testato e messo in pressione

BLOCS MOTEURS ET CULASSES REMANUFACTURÉS

Si vous avez besoin d'un moteur qui ne figure pas sur notre liste, veuillez nous appeler. Les numéros coulés du bloc et de la culasse nous aideront à l'identifier et a vous fournir exactement ce dont vous avez besoin.

Caractéristiques :
- Garantie limitée de 12 mois
- Nouveaux pistons et segments
- Cames et poussoirs marins
- Bouchons d'expansion en laiton
- Nouveaux coussinets de vilebrequin, de bielle et de came.
- Chaîne distribution et pignons neufs
- Nouvelle pompe à huile
- Nouveau jeu de joints marins
- Bloc mis à la terre et calibré
- Vilebrequin reconditionné
- Bielles reconditionnées
- Culasses remanufacturées
- Nouveaux ressorts de soupape
- Essai de rotation
- Test de pression

IDENTIFICANDO TIPO DE MOTOR BASE GM

Entradas Admisión
Intake Ports
Entrata aspirazione
Entrées d'admission

12 Tornillos Colector
12 Bolt Intake Manifold
12 Viti collettore aspirazione
12 Vis colelcteur admission

Tornillos en perímetro
Perimeter Bolt
Viti nel perimetro
Vis périmètre

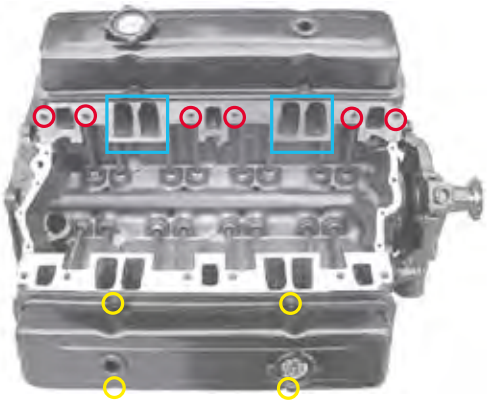

IDENTIFYING TYPE OF ENGINE BASE GM

Entradas Admisión
Intake Ports
Entrata aspirazione
Entrées d'admission

8 Tornillos Colector
8 Bolt Intake Manifold
8 Viti collettore aspirazione
8 Vis collecteur admission

Tornillos Tapa Válvulas en Centro
Center Bolt Valve Cover
Viti coperchio punterie centrali
Vis cache culbuteur au centre

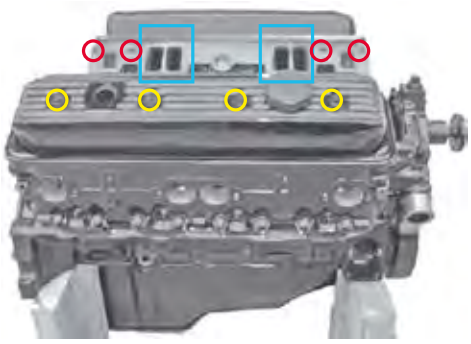

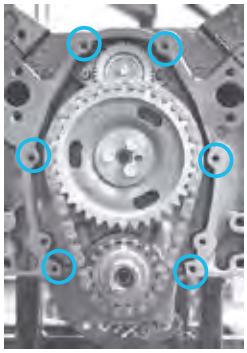

Tapa Distribución: 6 tornillos
6 Bolt Timing Cover
Carter distribuzione: 6 viti
CARTER DE DISTRIBUTION : 6 vis

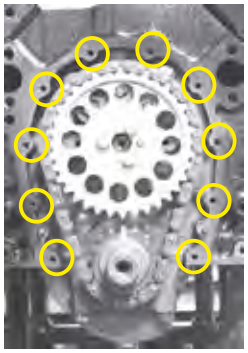

Tapa Distribución: 10 tornillos
10 Bolt Timing Cover
Carter distribuzione: 10 viti
CARTER DE DISTRIBUTION : 10 vis

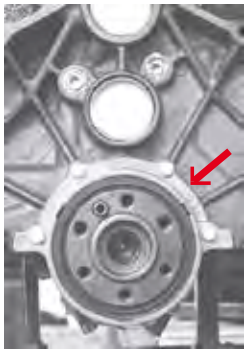

Retén trasero: 1 pieza
1 Piece. Rear Seal
Paraolio posteriore: 1 pz
Joint arrière : 1 p.



Retén trasero: 2 piezas
2 Pieces. Rear Seal
Paraolio posteriore: 2 pz
Joint arrière : 2 p.

IDENTIFICANDO BLOQUE Y CULATA | IDENTIFYING BLOCK & HEAD NUMBERS | IDENTIFICAZIONE BLOCCO E TESTATA | IDENTIFICATION DU BLOC ET DE LA CULASSE

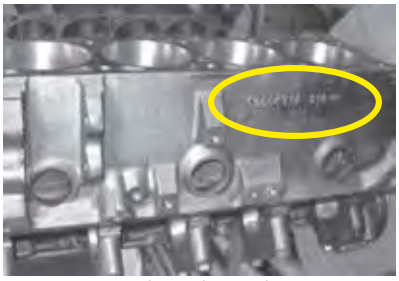

Bloque | Block | Blocco | Bloc
FORD



Culata | Heads | Testata | Culasse

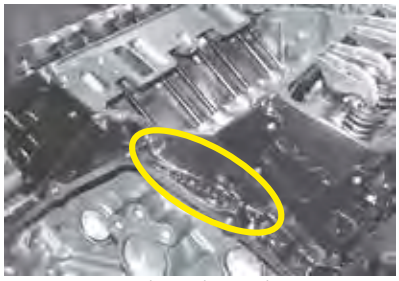

Bloque | Block | Blocco | Bloc
GM

MOTORES REMANUFACTURADOS FORD | REBUILT ENGINES FORD BLOCKS | MOTORI RIGENERATI BASE FORD | MOTEURS REMANUFACTURÉS FORD

	351 5.8L - V8						
1981-95	CULATA	CYLINDER HEAD	TESTATA	CULASSE		**FIRH6064**	
	NÚM. BLOQUE	BLOCK CASTING NUM.	NUM. BLOCCO	NUM. BLOC	D4AE-AA D4AE-DA D9AE-ED	E3AE-BA E4AE	
	NUM. CULATA	NUM. CYLINDER HEAD	NUM. TESTATA	NUM. CULASSE	D8OE D7OE-DA	E5AE-CA D8OE	E5TE, E7TE
	VARILLA ACEITE	OIL DIPSTICK	ASTICELLA DELL'OLIO	JAUGE D'HUILE	Carter, tapa delantera Pan oil, front cover Coppa olio, coperchio front Carter, couvercle avant		
	BUJÍA	SPARK PLUG	CANDELA	BOUGIE	Ø 14 mm		
	POTENCIA ESTIMADA	HORSE POWER	POTENZA APPROS.	PUISSANCE APROX.	235 - 250 HP		
	LIFTERS PLANOS	FLAT TAPPETS	LIFTER PIANI	LIFTERS PLANS	✓		
	460 7.5L - V8						
1978-90	CULATA	CYLINDER HEAD	TESTATA	CULASSE	**FIRH6065**		
	NÚM. BLOQUE	BLOCK CASTING NUM.	NUM. BLOCCO	NUM. BLOC	D9TE		
	NUM. CULATA	NUM. CYLINDER HEAD	NUM. TESTATA	NUM. CULASSE	D3VE-A2A D6TE-DA		
	NÚM. CIGÜEÑAL	CRANK SHAFT NUM.	NUM. ALBERO MOTORE	NUM. VILEBREQUIN	3Y 3YAABC		
	RETENES TRASEROS	REAR GASKETS	PARAOLIO POSTERIORE	JOINTS ARRIÊRES	2		
	TORNILLOS BAJO LOS BALANCINES	SCREWS UNDER THE ROCKER ARMS	VITI SOTTO I BILANCIERI	VIS SOUS LES CULBUTEURS			
	BUJÍA	SPARK PLUG	CANDELA	BOUGIE	Ø 14 mm		
	POTENCIA ESTIMADA	HORSE POWER	POTENZA APPROS.	PUISSANCE APROX.	300 - 340 HP		
	LIFTERS PLANOS	FLAT TAPPETS	LIFTER PIANI	LIFTERS PLANS	✓		

NOTA
La letra "T" en la referencia de los bloques de motor significa que llevan instalado: tapa de distribución, carter, bomba de aceite y tubo de aspiración.
* = últimos dígitos

NOTE
The letter "T" in the reference of the engine blocks means that includes: Timing cover, oil pan, oil pump and pickup tube installed.
* = last digits

NOTA
La lettera "T" in riferimento ai blocchi motore significa che hanno installato: coperchio distribuzione, carter, pompa olio e tubo di aspirazione.
* = ultimi numeri

NOTE
La lettre "T" dans la référence des blocs moteurs signifie qu'ils ont installé : couvercle de distribution, carter, pompe à huile et tuyau d'aspiration.
* = derniers numéros

MOTORES REMANUFACTURADOS GM	REBUILT ENGINES GM BLOCKS	MOTORI RIGENERATI BASE GM	MOTEURS REMANUFACTURÉS GM	
262 4.3L - V6				
	ROTACIÓN ESTÁNDAR	STANDARD ROTATION	ROTAZIONE STANDARD	ROTATION STANDARD	**FIRGM262LA**
	CULATA	CYLINDER HEAD	TESTATA	CULASSE	**FIRH6009**
	NÚM. BLOQUE	BLOCK CASTING NUM.	NUM. BLOCCO	NUM. BLOC	14071177
1985-86	NUM. CULATA	NUM. CYLINDER HEAD	NUM. TESTATA	NUM. CULASSE	17079268 *107, *476
	RETENES TRASEROS	REAR GASKETS	PARAOLIO POSTERIORE	JOINTS ARRIÊRES	2
	TORNILLOS TAPA DE VÁLVULAS	SCREWS VALVE COVER	VITI DE COPERCHIO PUNTERIE	VIS DU CACHE CULBUTEUR	centro | center | centro | centre
	POTENCIA ESTIMADA	HORSE POWER	POTENZA APPROS.	PUISSANCE APROX.	175 - 205 hp
	CULATA	CYLINDER HEAD	TESTATA	CULASSE	**FIRH6009**
	NÚM. BLOQUE	BLOCK CASTING NUM.	NUM. BLOCCO	NUM. BLOC	14088553 *683
1986-88	NUM. CULATA	NUM. CYLINDER HEAD	NUM. TESTATA	NUM. CULASSE	14079268, 14131996, 14094768 *107, *476, *103, *066
	RETENES TRASEROS	REAR GASKETS	PARAOLIO POSTERIORE	JOINTS ARRIÊRES	2
	TORNILLOS TAPA DE VÁLVULAS	SCREWS VALVE COVER	VITI DE COPERCHIO PUNTERIE	VIS DU CACHE CULBUTEUR	centro | center | centro | centre
	POTENCIA ESTIMADA	HORSE POWER	POTENZA APPROS.	PUISSANCE APROX.	175 - 205 HP
	CULATA	CYLINDER HEAD	TESTATA	CULASSE	**FIRH6009**
	NÚM. BLOQUE	BLOCK CASTING NUM.	NUM. BLOCCO	NUM. BLOC	14093611, 10105867, 10066011 *756,*256,*073, *683,*061
	NUM. CULATA	NUM. CYLINDER HEAD	NUM. TESTATA	NUM. CULASSE	14131996, 14094768 *107, *476, *103, *066
	RETENES TRASEROS	REAR GASKETS	PARAOLIO POSTERIORE	JOINTS ARRIÊRES	1
1987-92	TORNILLOS TAPA DE VÁLVULAS	SCREWS VALVE COVER	VITI DE COPERCHIO PUNTERIE	VIS DU CACHE CULBUTEUR	centro | center | centro | centre
	POTENCIA ESTIMADA	HORSE POWER	POTENZA APPROS.	PUISSANCE APROX.	175 - 205 HP
	LIFTERS DE RODILLOS	ROLLER CAM	SOLLEVATORE RULLI	POUSSOIR À ROULEAUS	✓
	TORNILLOS EN TAPA DISTRIBUCIÓN	BOLT TIMING COVER	VITI CARTER DISTRIBUZIONE	VIS DU CARTER DE DISTRIBUTION	10
	TORNILLOS COLECTOR ADMISIÓN	INTAKE BOLTS	VITI COLLETTORE ASPIRAZIONE	VIS DU COLLECTEUR D'ADMISSIÓN	12
	CULATA	CYLINDER HEAD	TESTATA	CULASSE	**FIRH6011**
	NÚM. BLOQUE	BLOCK CASTING NUM.	NUM. BLOCCO	NUM. BLOC	*061,*073, *756
	NUM. CULATA	NUM. CYLINDER HEAD	NUM. TESTATA	NUM. CULASSE	*064, *181, *209, *626
	TORNILLOS TAPA DE VÁLVULAS	SCREWS VALVE COVER	VITI DE COPERCHIO PUNTERIE	VIS DU CACHE CULBUTEUR	centro | center | centro | centre
1992-96	POTENCIA ESTIMADA	HORSE POWER	POTENZA APPROS.	PUISSANCE APROX.	175 - 205 HP
	LIFTERS DE RODILLOS	ROLLER CAM	SOLLEVATORE RULLI	POUSSOIR À ROULEAUS	SIN eje calibrado | WITHOUT balance shaft SENZA asse equilibrato | SANS arbre d'équilibrage
	BOMBA COMBUSTIBLE	FUEL PUMP	POMPA BENZINA	POMPE A ESSENCE	eléctrica | electric | elettrica | électrique
	TORNILLOS COLECTOR ADMISIÓN	INTAKE BOLTS	VITI COLLETTORE ASPIRAZIONE	VIS DU COLLECTEUR D'ADMISSIÓN	12
	ROTACIÓN ESTÁNDAR	STANDARD ROTATION	ROTAZIONE STANDARD	ROTATION STANDARD	**FIRGM262LIT**
	CULATA	CYLINDER HEAD	TESTATA	CULASSE	**FIRH6011**
	NÚM. BLOQUE	BLOCK CASTING NUM.	NUM. BLOCCO	NUM. BLOC	*196, *359, *534, *535
	NUM. CULATA	NUM. CYLINDER HEAD	NUM. TESTATA	NUM. CULASSE	*181, *209, *064
1992-99	LIFTERS DE RODILLOS	ROLLER CAM	SOLLEVATORE RULLI	POUSSOIR À ROULEAUS	CON eje calibrado | WITH balance shaft CON asse equilibrato | AVEC arbre d'équilibrage
	TORNILLOS COLECTOR ADMISIÓN	INTAKE MANIFORD BOLTS	VITI NEL COLLETTORE ASPIRAZIONE	VIS DU COLLECTEUR D'ADMISSIÓN	12
	TORNILLOS EN TAPA DISTRIBUCIÓN	BOLT TIMING COVER	VITI CARTER DISTRIBUZIONE	VIS DU CARTER DE DISTRIBUTION	6 /10
	TORNILLOS EN CARTER	OIL PAN BOLTS	VITI NELLA COPPA DELL'OLIO	VIS EN CARTER	14
	ROTACIÓN ESTÁNDAR	STANDARD ROTATION	ROTAZIONE STANDARD	ROTATION STANDARD	**FIRGM262LGT**
	CULATA	CYLINDER HEAD	TESTATA	CULASSE	**FIRH6010**
	NÚM. BLOQUE	BLOCK CASTING NUM.	NUM. BLOCCO	NUM. BLOC	*090
	NUM. CULATA	NUM. CYLINDER HEAD	NUM. TESTATA	NUM. CULASSE	*772,*140
1996-99 VORTEC	LIFTERS DE RODILLOS DE FUNDICIÓN	ROLLER ROCKER CASTING	SOLLEVATORE RULLI	POUSSOIR À ROULEAUS DE Fe	CON eje calibrado | WITH balance shaft CON asse equilibrato | AVEC arbre d'équilibrage
	TORNILLOS COLECTOR ADMISIÓN	INTAKE MANIFORD BOLTS	VITI NEL COLLETTORE ASPIRAZIONE	VIS DE COLLECTEUR D'ADMISSION	8
	TORNILLOS EN TAPA DISTRIBUCIÓN	BOLT TIMING COVER	VITI CARTER DISTRIBUZIONE	VIS DU CARTER DE DISTRIBUTION	6
	TORNILLOS EN CARTER	OIL PAN BOLTS	VITI NELLA COPPA DELL'OLIO	VIS EN CARTER	10

NOTA
La letra "T" en la referencia de los bloques de motor significa que llevan instalado: tapa de distribución, carter, bomba de aceite y tubo de aspiración.
* = últimos dígitos

NOTE
The letter "T" in the reference of the engine blocks means that includes: Timing cover, oil pan, oil pump and pickup tube installed.
* = last digits

NOTA
La lettera "T" in riferimento ai blocchi motore significa che hanno installato: coperchio distribuzione, carter, pompa olio e tubo di aspirazione.
* = ultimi numeri

NOTE
La lettre "T" dans la référence des blocs moteurs signifie qu'ils ont installé : couvercle de distribution, carter, pompe à huile et tuyau d'aspiration.
* = derniers numéros

	ROTACIÓN ESTÁNDAR	STANDARD ROTATION	ROTAZIONE STANDARD	ROTATION STANDARD	FIRGM262LJT
	CULATA	CYLINDER HEAD	TESTATA	CULASSE	REC3861911
	NÚM. BLOQUE	BLOCK CASTING NUM.	NUM. BLOCCO	NUM. BLOC	*090M
	NUM. CULATA	NUM. CYLINDER HEAD	NUM. TESTATA	NUM. CULASSE	*113
1996-08	LIFTERS DE RODILLOS	ROLLER CAM	SOLLEVATORE RULLI	POUSSOIR À ROULEAUS	CON eje calibrado | WITH balance shaft CON asse equilibrato | AVEC arbre d'équilibrage
	TORNILLOS COLECTOR ADMISIÓN	INTAKE MANIFORD BOLTS	VITI NEL COLLETTORE ASPIRAZIONE	VIS DE COLLECTEUR D'ADMISSION	8
	TORNILLOS EN TAPA DISTRIBUCIÓN	BOLT TIMING COVER	VITI CARTER DISTRIBUZIONE	VIS DU CARTER DE DISTRIBUTION	6
	TORNILLOS EN CARTER	OIL PAN BOLTS	VITI NELLA COPPA DELL'OLIO	VIS EN CARTER	10
	ROTACIÓN ESTÁNDAR	STANDARD ROTATION	ROTAZIONE STANDARD	ROTATION STANDARD	RECGM262VORTEC
	CULATA	CYLINDER HEAD	TESTATA	CULASSE	REC3861911
	NÚM. BLOQUE	BLOCK CASTING NUM.	NUM. BLOCCO	NUM. BLOC	*234, *324
	NUM. CULATA	NUM. CYLINDER HEAD	NUM. TESTATA	NUM. CULASSE	*113, *114
1996-08	LIFTERS DE RODILLOS	ROLLER CAM	SOLLEVATORE RULLI	POUSSOIR À ROULEAUS	CON eje calibrado | WITH balance shaft CON asse equilibrato | AVEC arbre d'équilibrage
	TORNILLOS COLECTOR ADMISIÓN	INTAKE MANIFORD BOLTS	VITI NEL COLLETTORE ASPIRAZIONE	VIS DE COLLECTEUR D'ADMISSION	8
	TORNILLOS EN TAPA DISTRIBUCIÓN	BOLT TIMING COVER	VITI CARTER DISTRIBUZIONE	VIS DU CARTER DE DISTRIBUTION	8
	TORNILLOS EN CARTER	OIL PAN BOLTS	VITI NELLA COPPA DELL'OLIO	VIS EN CARTER	10

305 5.0L - V8

	CONTRAROTACIÓN	REVERSER ROTATION	CONTROROTANTE	CONTRAROTATION	FIRGM305RB	
	NÚM. BLOQUE	BLOCK CASTING NUM.	NUM. BLOCCO	NUM. BLOC	14102058, 14093627, 14088551, *535	14022601, 14022301, 14014416, *434, *741
	NUM. CULATA	NUM. CYLINDER HEAD	NUM. TESTATA	NUM. CULASSE		*450,*513, *416
	TORNILLOS TAPA DE VÁLVULAS	SCREWS VALVE COVER	VITI DE COPERCHIO PUNTERIE	VIS DU CACHE CULBUTEUR	perímetro | around perimeter | perimetro | Perimétre	
	LIFTERS PLANOS	FLAT TAPPETS	LIFTER PIANI	LIFTER PLANS	✓	
	POTENCIA ESTIMADA	HORSE POWER	POTENZA APPROS.	PUISSANCE APROX.	200 - 230 HP	
	ROTACIÓN ESTÁNDAR	STANDARD ROTATION	ROTAZIONE STANDARD	ROTATION STANDARD	FIRGM305LCT	
	CONTRAROTACIÓN	REVERSER ROTATION	CONTROROTANTE	CONTRAROTATION	FIRGM305RC	
1987-99	NÚM. BLOQUE	BLOCK CASTING NUM.	NUM. BLOCCO	NUM. BLOC	14102058, 14093627 14088551, *535	*081 Deben cambiarse las dos culatas Must be replaced both Cylinder Heads Essi devono essere modificate le due testate Les deux culasses doivent être remplacées
	NUM. CULATA	NUM. CYLINDER HEAD	NUM. TESTATA	NUM. CULASSE		*187
	RETENES TRASEROS	REAR GASKETS	PARAOLIO POSTERIORE	JOINTS ARRIÈRES	1	
	TORNILLOS TAPA DE VÁLVULAS	SCREWS VALVE COVER	VITI DE COPERCHIO PUNTERIE	VIS DU CACHE CULBUTEUR	centro | center | centro | centre	
	TORNILLOS COLECTOR ADMISIÓN	INTAKE MANIFORD BOLTS	VITI NEL COLLETTORE ASPIRAZIONE	VIS DE COLLECTEUR D'ADMISSION	12	
	TORNILLOS EN TAPA DISTRIBUCIÓN metálica	BOLT METAL TIMING COVER	VITI CARTER DISTRIBUZIONE IN METALLO	VIS DU CARTER DE DISTRIBUTION metalique	10	
	ROTACIÓN ESTÁNDAR	STANDARD ROTATION	ROTAZIONE STANDARD	ROTATION STANDARD	RECGM305VORTEC	
	NÚM. BLOQUE	BLOCK CASTING NUM.	NUM. BLOCCO	NUM. BLOQUE	*878, *880	
	NUM. CULATA	NUM. CYLINDER HEAD	NUM. TESTATA	NUM. CULASSE	*620, *059, *520	
1996+ VORTEC	RETENES TRASEROS	REAR GASKETS	PARAOLIO POSTERIORE	JOINTS ARRIÈRES	1	
	TORNILLOS COLECTOR ADMISIÓN	INTAKE MANIFORD BOLTS	VITI NEL COLLETTORE ASPIRAZIONE	VIS DE COLLECTEUR D'ADMISSION	8	
	TORNILLOS EN TAPA DISTRIBUCIÓN PLASTICO	BOLT PLASTIC TIMING COVER	VITI CARTER DISTRIBUZIONE IN PLASTICA	VIS DU CARTER DE DISTRIBUTION plastique	10	

350 5.7L - V8

	ROTACIÓN ESTÁNDAR	STANDARD ROTATION	ROTAZIONE STANDARD	ROTATION STANDARD	RECGM350
	CULATA	CYLINDER HEAD	TESTATA	CULASSE	REC938-7499
	NÚM. BLOQUE	BLOCK CASTING NUM.	NUM. BLOCCO	NUM. BLOC	*245, *379, *010, *014, *678, *388, *618
	NUM. CULATA	NUM. CYLINDER HEAD	NUM. TESTATA	NUM. CULASSE	*993, *624, *882, *487
1976-85	RETENES TRASEROS	REAR GASKETS	PARAOLIO POSTERIORE	JOINTS ARRIÈRES	2
	VARILLA ACEITE	OIL DIPSTICK	ASTICELLA DELL'OLIO	JAUGE D'HUILE	Lateral | on-side | lato | lateral
	TORNILLOS TAPA DE VÁLVULAS	SCREWS VALVE COVER	VITI DE COPERCHIO PUNTERIE	VIS DU CACHE CULBUTEUR	perímetro | around perimeter | perimetro | Perimétre
	POTENCIA ESTIMADA	HORSE POWER	POTENZA APPROS.	PUISSANCE APROX.	260 HP

1986-87	ROTACIÓN ESTÁNDAR	STANDARD ROTATION	ROTAZIONE STANDARD	ROTATION STANDARD	**RECGM350PREVORTEC**
	CONTRAROTACIÓN	REVERSER ROTATION	CONTROROTANTE	CONTRAROTATION	**FIRGM350RBF**
	CULATA	CYLINDER HEAD	TESTATA	CULASSE	**REC938-7499**
	NÚM. BLOQUE	BLOCK CASTING NUM.	NUM. BLOCCO	NUM. BLOC	14101148, 14093638, 14088548, 10054727, *526
	NUM. CULATA	NUM. CYLINDER HEAD	NUM. TESTATA	NUM. CULASSE	*993, *624, *882, *487
	RETENES TRASEROS	REAR GASKETS	PARAOLIO POSTERIORE	JOINTS ARRIÈRES	1
	TORNILLOS TAPA DE VÁLVULAS	SCREWS VALVE COVER	VITI DE COPERCHIO PUNTERIE	VIS DU COUVERCLE DE SOUPAPE	perímetro | around perimeter | perimetro | Périmétre
	POTENCIA ESTIMADA	HORSE POWER	POTENZA APPROS.	PUISSANCE APROX.	260 HP
1988-95	ROTACIÓN ESTÁNDAR	STANDARD ROTATION	ROTAZIONE STANDARD	ROTATION STANDARD	**RECGM350PREVORTEC**
	CULATA	CYLINDER HEAD	TESTATA	CULASSE	**FIRH6023**
	NÚM. BLOQUE	BLOCK CASTING NUM.	NUM. BLOCCO	NUM. BLOC	14101148, 14093638, 14088548, 10054727, *526
	NUM. CULATA	NUM. CYLINDER HEAD	NUM. TESTATA	NUM. CULASSE	*193, *083, *217
	RETENES TRASEROS	REAR GASKETS	PARAOLIO POSTERIORE	JOINTS ARRIÈRES	1
	TORNILLOS COLECTOR ADMISIÓN	INTAKE MANIFORD BOLTS	VITI NEL COLLETTORE ASPIRAZIONE	VIS DE COLLECTEUR D'ADMISSION	12
	TAPA DISTRIBUCIÓN	TIMING COVER	CARTER DISTRIBUZIONE	CARTER DE DISTRIBUTION	metal | metal | metallo | metalique
	TORNILLOS TAPA DE VÁLVULAS	SCREWS VALVE COVER	VITI DE COPERCHIO PUNTERIE	VIS DU COUVERCLE DE SOUPAPE	centro | center | centro | centre
	POTENCIA ESTIMADA	HORSE POWER	POTENZA APPROS.	PUISSANCE APROX.	260 hp
1995-99	ROTACIÓN ESTÁNDAR	STANDARD ROTATION	ROTAZIONE STANDARD	ROTATION STANDARD	**RECGM350PREVORTEC**
	CULATA	CYLINDER HEAD	TESTATA	CULASSE	**FIRH6023** No Vortec
	NÚM. BLOQUE	BLOCK CASTING NUM.	NUM. BLOCCO	NUM. BLOC	*880
	NUM. CULATA	NUM. CYLINDER HEAD	NUM. TESTATA	NUM. CULASSE	*193, *083, *217
	RETENES TRASEROS	REAR GASKETS	PARAOLIO POSTERIORE	JOINTS ARRIÈRES	1
	TORNILLOS COLECTOR ADMISIÓN	INTAKE MANIFORD BOLTS	VITI NEL COLLETTORE ASPIRAZIONE	VIS DE COLLECTEUR D'ADMISSION	12
	TORNILLOS EN TAPA DISTRIBUCIÓN PLASTICO	BOLT PLASTIC TIMING COVER	VITI CARTER DISTRIBUZIONE IN PLASTICA	VIS DU CARTER DE DISTRIBUTION plastique	6
	BOMBA COMBUSTIBLE	FUEL PUMP	POMPA BENZINA	POMPE A ESSENCE	mecánica, eléctrica | mechanical, electric meccanica, elettrica | mecanique, éléctrique
	POTENCIA ESTIMADA	HORSE POWER	POTENZA APPROS.	PUISSANCE APROX.	260 hp
1996+	ROTACIÓN ESTÁNDAR	STANDARD ROTATION	ROTAZIONE STANDARD	ROTATION STANDARD	**RECGM350VORTEC**
	CULATA	CYLINDER HEAD	TESTATA	CULASSE	**REC938-803860T** Vortec
	NÚM. BLOQUE	BLOCK CASTING NUM.	NUM. BLOCCO	NUM. BLOC	*880
	NUM. CULATA	NUM. CYLINDER HEAD	NUM. TESTATA	NUM. CULASSE	*906, *062
	RETENES TRASEROS	REAR GASKETS	PARAOLIO POSTERIORE	JOINTS ARRIÈRES	1
	TORNILLOS COLECTOR ADMISIÓN	INTAKE MANIFORD BOLTS	VITI NEL COLLETTORE ASPIRAZIONE	VIS DE COLLECTEUR D'ADMISSION	8
	TORNILLOS EN TAPA DISTRIBUCIÓN PLASTICO	BOLT PLASTIC TIMING COVER	VITI CARTER DISTRIBUZIONE IN PLASTICA	VIS DU CARTER DE DISTRIBUTION plastique	6
	BOMBA COMBUSTIBLE	FUEL PUMP	POMPA BENZINA	POMPE A ESSENCE	mecánica, eléctrica | mechanical, electric meccanica, elettrica | mecanique, éléctrique
	POTENCIA ESTIMADA	HORSE POWER	POTENZA APPROS.	PUISSANCE APROX.	260 hp
454 7.4L - V8					
	CONTRAROTACIÓN	REVERSER ROTATION	CONTROROTANTE	CONTRE ROTATION	**FIRGM454RB**
	NÚM. BLOQUE	BLOCK CASTING NUM.	NUM. BLOCCO	NUM. BLOC	10114182 *297, 313
	NUM. CULATA	NUM. CYLINDER HEAD	NUM. TESTATA	NUM. CULASSE	10114156 *932
	TOMA ADMISIÓN	INTAKE PORT HEADS	FORI D'ASPIRAZIONE	ENTRÉES ADMISSION	OVAL
	RETENES TRASEROS	REAR GASKETS	PARAOLIO POSTERIORE	JOINTS ARRIÈRES	1
	LIFTERS PLANOS	FLAT TAPPETS	LIFTER PIANI	LIFTERS PLANS	✓
	TORNILLOS EN TAPA DISTRIBUCIÓN	BOLT TIMING COVER	VITI CARTER DISTRIBUZIONE	VIS DU CARTER DE DISTRIBUTION	10
1996-99 GEN VI	ROTACIÓN ESTÁNDAR	STANDARD ROTATION	ROTAZIONE STANDARD	ROTATION STANDARD	**RECGM454**
	CULATA	CYLINDER HEAD	TESTATA	CULASSE	**FIRH6036**
	NÚM. BLOQUE	BLOCK CASTING NUM.	NUM. BLOCCO	NUM. BLOQUE	*297, 313
	NUM. CULATA	NUM. CYLINDER HEAD	NUM. TESTATA	NUM. CULASSE	*279
	RETENES TRASEROS	REAR GASKETS	PARAOLIO POSTERIORE	JOINTS ARRIÈRES	1
	LIFTERS DE RODILLOS	ROLLER CAM	SOLLEVATORE RULLI	POUSSOIR À ROULEAUS	✓
	BOMBA COMBUSTIBLE	FUEL PUMP	POMPA BENZINA	POMPE A ESSENCE	eléctrica | electric | elettrica | éléctrique
	TORNILLOS EN TAPA DISTRIBUCIÓN	BOLT TIMING COVER	VITI CARTER DISTRIBUZIONE	VIS DU CARTER DE DISTRIBUTION	6
	POTENCIA ESTIMADA	HORSE POWER	POTENZA APPROS.	PUISSANCE APROX.	330 hp

181 CID 3.0L
250 CID 4.1L

CULATA — CYLINDER HEAD — TESTATA — CULASSE

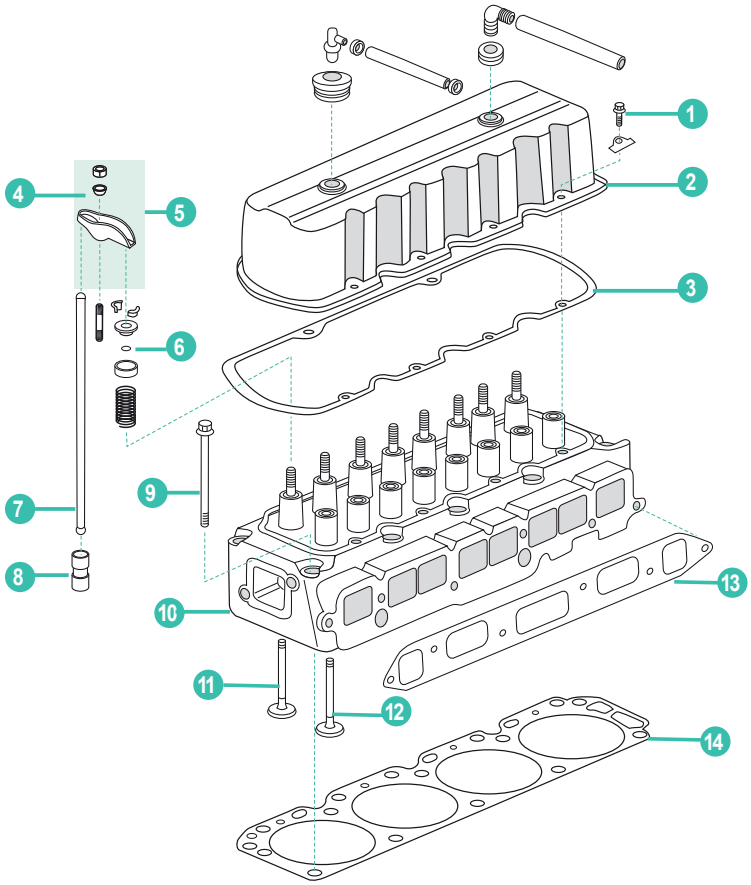

Permatex P. 17

	REF	VOLVO	MERCRUISER					UN.
1	REC912127	3853503	10-65746	TORNILLO, TAPA VÁLVULA	BOLT: VALVE COVER	VITE, COPERCHIO VALVOLA	VIS CACHE CULBUTEUR	5
2	MP0014-100	3853784	851036T	TAPA VÁLVULA: 3.0L	VALVE COVER: 3.0L	COPERCHIO VALVOLA: 3.0L	CACHE CULBUTEUR 3.0L	1
3	REC17900	3852693	27-851040	JUNTA TAPA VÁLVULA 3.0L	GASKET VALVE COVER 3.0L	GUARNIZIONE COPERCHIO VALVOLA 3.0L	JOINT CACHE CULBUTEUR 3.0L	1
	FEL17925		27-49936	JUNTA TAPA VÁLVULA 4.1L	GASKET VALVE COVER 4.1L	GUARNIZIONE COPERCHIO VALVOLA 4.1L	JOINT CACHE CULBUTEUR 4.1L	
4	RM59340		59340	BOLA VÁLVULA BRAZO DEL BALANCÍN	BALL, VALVE ROCKER ARM	SFERA VALVOLA BILANCERE	COUPELLE POUR SOUPAPE ECHAPPEMENT	8
5	REC13514	3853139	34519	BALANCÍN 3.0L	ROCKER ARM 3.0L	BILANCERE 3.0L	CULBUTEUR 3.0L	8
6	REC26-34217	3854956	26-34217	RETÉN VÁLVULA ACEITE	SEAL: VALVE STEM OIL	PARAOLIO VALVOLA OLIO	JOINT D'HUILE DE SOUPAPE	8
7	REC12001	3857899	34532	VARILLA	PUSH ROD	ASTA	TIGE DE CULBUTEUR	8
8	REC14000	3853954	72638	EMPUJADOR VÁLVULA	LIFTER: VALVE	ALZA VALVOLA	POUSSOIR	8
9	REC10501	3857900	10-34510	TORNILLO CULATA	BOLT: CYLINDER HEAD	VITE TESTATA	VIS DE CULASSE	10
10	REC936-810849	3854012	938-8M0115135	CULATA 3.0L (1990+)	CYLINDER HEAD 3.0L (1990+)	TESTATA 3.0L (1990+)	CULASSE 3.0 (1990+)	1
				VÁLVULA ADMISIÓN	INTAKE VALVE	VALVOLA ASPIRAZIONE	SOUPAPE D'ADMISSION	
11	REC13503		62421	2.5L (43.7-8.7-125) 4.1L (43.7-8.7-125)	2.5L (43.7-8.7-125) 4.1L (43.7-8.7-125)	2.5 (43.7-8.7-125) 4.1L (43.7-8.7-125)	2.5L (43.7-8.7-125) 4.1L (43.7-8.7-125)	4
	REC13504	3857879	97661	3.0L (49.3-8.7-124)	3.0L (49.3-8.7-124)	3.0L (49.3-8.7-124)	3.0L (49.3-8.7-124)	
				VÁLVULA ESCAPE	EXHAUST VALVE	VALVOLA SCARICO	SOUPAPE D'ECHAPPEMENT	
12			34528	4.1L (38-8.6-125.5)	4.1L (38-8.6-125.5)	4.1L (38-8.6-125.5)	4.1L (38-8.6-125.5)	4
	REC13501	3853127	52367	3.0L (40.7-8.7-125)	3.0L (40.7-8.7-125)	3.0L (40.7-8.7-125)	3.0L (40.7-8.7-125)	
	REC13502	856368	85803	2.5L (38.1-8.7-125)	2.5L (38.1-8.7-125)	2.5L (38.1-8.7-125)	2.5L (38.1-8.7-125)	
				JUNTAS, ADMISIÓN / ESCAPE	INTAKE / EXHAUST GASKET	GUARNIZ. ASPIRAZIONE / SCARICCO	JOINTS, ADMSSION / ECHAPPEMENT	
	REC27-52546		27-52546	2.5L	2.5L	2.5L	2.5L	
13	REC27-53354		27-53354	181	181	181	181	1
	REC27-96429		27-96429	3.0L (NO LX)	3.0L (NOT LX)	3.0L (NO LX)	3.0L (NON LX)	
	REC27-815528	3853256	27-815528	3.0LX (1991+)	3.0LX (1991+)	3.0LX (1991+)	3.0LX (1991+)	
	FEL17319		27-46401	4.1L	4.1L	4.1L	4.1L	
				JUNTAS CULATA	CYLINDER HEAD GASKE	GUARNIZ. TESTATA	JOINTS DE CULASSE	
14	REC17000	3853336	27-52364	181 (3.0L)	181 (3.0L)	181 (3.0L)	181 (3.0L)	1
	FEL17019		24-47453	4.1L	4.1L	4.1L	4.1L	

CARTER ACEITE | OIL PAN | COPPA OLIO | CARTER D'HUILE





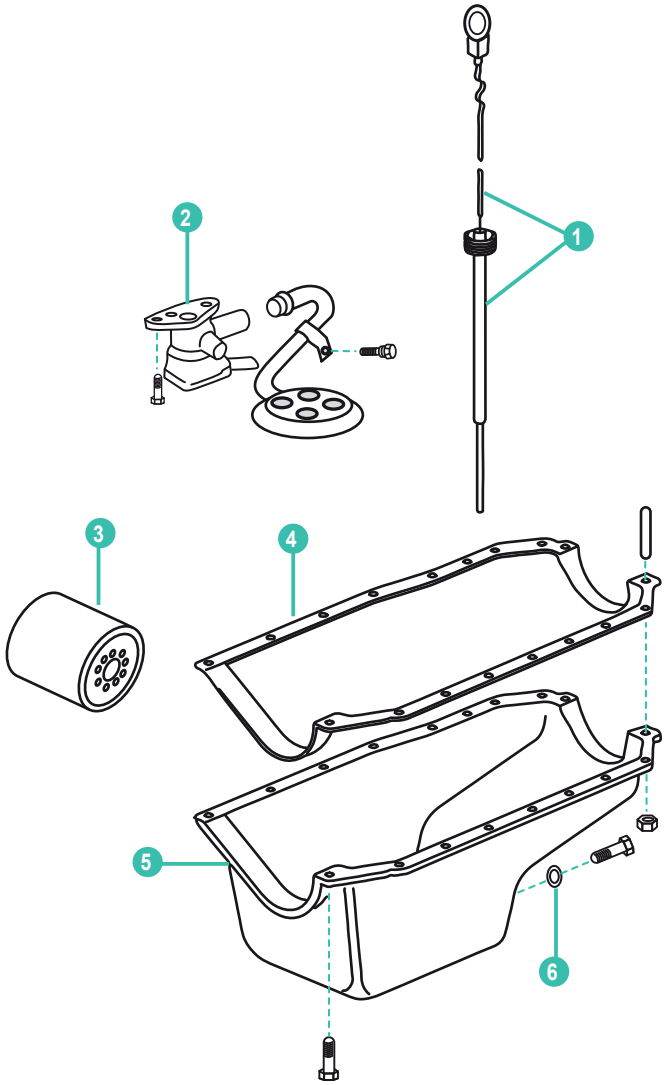

Permatex P. 17

	REF	VOLVO	MERCRUISER					UN.
1	MP0314-002			VARILLA + TUBO ACEITE 181	DIPSTICK + TUBE 181 OIL	ASTA + TUBO OLIO 181	TIGE + TUBE D'HUILE 181	1
2	REC14100	3853843	36405	BOMBA ACEITE:181 RX	PUMP: 181 RX OIL	POMPA OLIO: 181 RX	POMPE A HUILE: 181 RX	1
3		P. 359	P. 114	FILTRO ACEITE	FILTER OIL	FILTRO OLIO	FILTRE A HUILE	1
				JUNTA CÁRTER	GASKET OIL PAN	GUARNIZIONE COPPA OLIO	JOINT DE CARTER	
4	REC17950		27-52144	4 PIEZAS	4 Pcs.	4 PEZZI	4 PIÈCES	1
	REC17102	3853343	27-810846	3.0L (retén trasero 1 pieza)	3.0L (1 Piece rear seal)	3.0L (tenuta posteriore 1 peze)	3.0L (joint arrière 1 pièce)	
	FEL17975		27-49949	4.1L	4.1L	4.1L	4.1L	
5	RM810845	3854015	810845T	CÁRTER 181 3.0L Y 3.0 LX, MPI, TKS (1990+)	OIL PAN 181 3.0L & 3.0 LX, MPI, TKS (1990+)	COPPA OLIO 181 3.0L E 3.0 LX, MPI, TKS (1990+)	CARTER 181 3.0L ET 3.0LX, MPI, TKS (1990+)	1
6	REC27-49955	3851981	27-49955	JUNTA	GASKET	GUARNIZIONE	JOINT	1
				KIT JUNTAS	GASKET SET	KIT GAURNIZIONE	KIT JOINTS	
7	REC17100		32-865277	3.0L (4 juntas cárter, retén trasero 2 piezas)	3.0L (4 oil pan gaskets 2 pcs. rear seal)	3.0L (4 guarniz. coppa olio, tenuta posteriore 2 pezi)	3.0L (4 joints du carter, joint arrière 2 pièces)	1
	REC17102			3.0L (1 junta cárter, 1 retén trasero)	3.0L (1 oil pan gasket 1 pc. rear seal)	3.0L (1 guarniz. coppa olio, 1 tenuta posteriore)	3.0L (1 JOINT DE CARTER, joint arrière 2 pièces)	
	FEL17119			4.1L, 24 TORNILLOS (Cárter 16 tornillos, utilizar sellante STA82910)	4.1L, 24 BOLTS (16 bolt oil pan, use sellant STA82910)	4.1L, 24 VITI (Coppa olio 16 viti, Usare il sigillante STA82910)	4.1L 24 VIS (carter 16 vis, utiliser un scellant STA82910)	
				MANGUERA DE VACIADO	DRAIN HOSE	TUBO DI SCARICO	TUYAU DE VIDANGE	
8	MPI305-0380	3854956	26-34217	MCM-OMC 1/2"	MCM-OMC1/2"	MCM-OMC 1/2"	MCM-OMC 1/2"	1
	MPI307-0380	3857898	24-35214	VOLVO 3/4"	VOLVO 3/4"	VOLVO 3/4"	VOLVO 3/4"	

ÁRBOL DE LEVAS | CAMSHAFT | ALBERO A CAME | ARBRE À CAMES

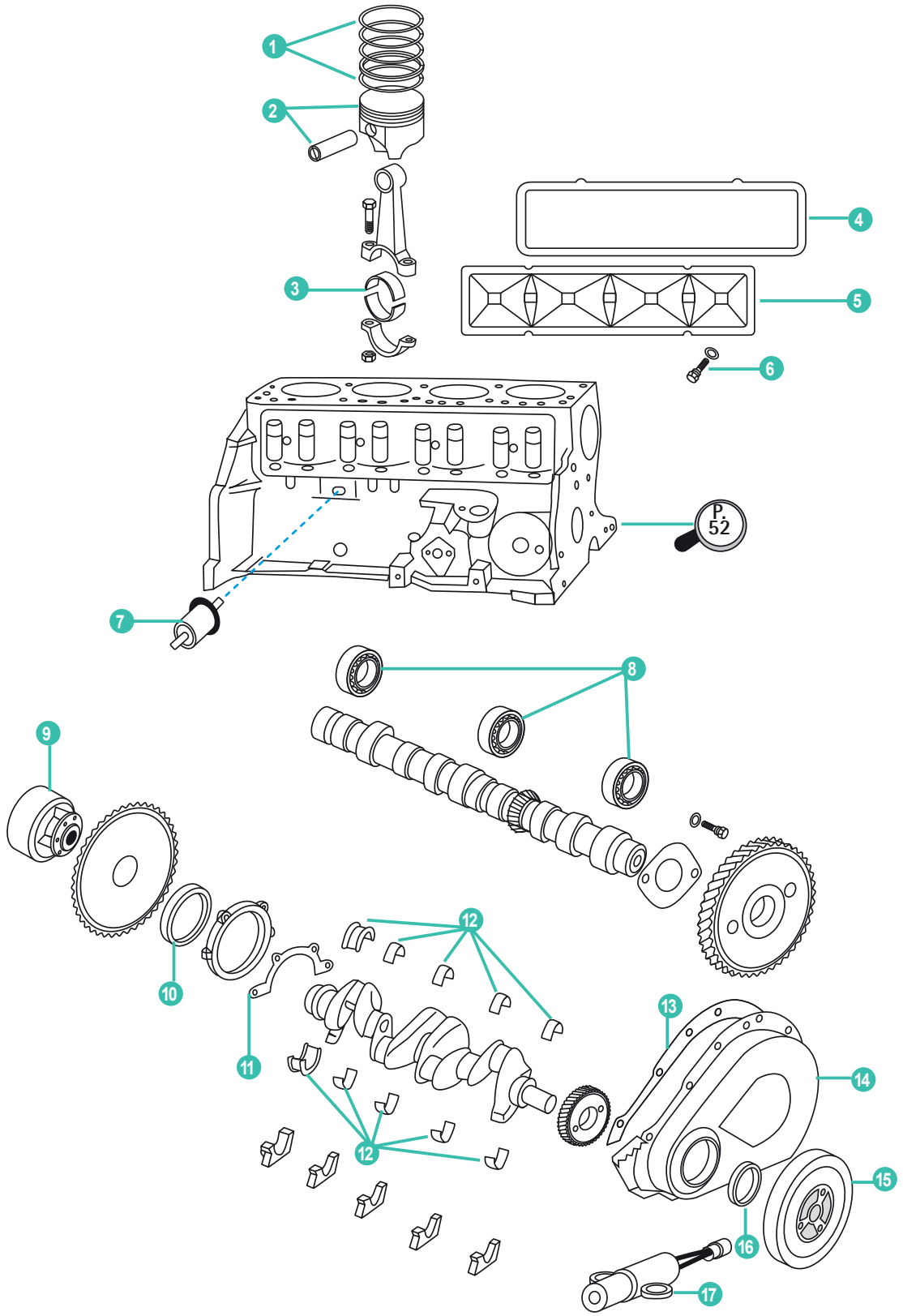







Permatex P. 17

	REF	VOLVO	MERCURY					UN.
				KIT AROS	RING SET	KIT ANELLI	KIT DE SEGMENTS	
1	REC11008		39-66217	181 3.0L 0.20	181 RX 3.0L 0.20	181 RX 3.0L 0.20	181 RX 3.0L 0.20	4
	REC11001	3853960	39-17464	181 3.0LX STD	181 3.0LX STD	181 3.0LX STD	181 3.0LX STD	4
	REC11002		39-67132	4.1L STD	4.1L STD	4.1L STD	4.1L STD	6
	REC11003		39-67134	4.1L 0.30	4.1L 0.30	181 0.30	181 0.30	6
	REC11021			181RX 0.40	181RX 0.40	181RX 0.40	181RX 0.40	
				PISTÓN	PISTON	PISTONE	PISTON	
2	REC10001		733-803850T	181 RX 3.0L STD	181 RX 3.0L STD	181 RX 3.0L STD	181 RX 3.0L STD	4
	RM733-810852	3853340	733-810852	181 3.0LX STD (alt. 1.98 x 1.98 x 4.76 mm)	181 3.0LX STD (high 1.98 x1.98x4.76 mm)	181 3.0LX STD (alto1.98x1.98x4.76 mm)	181 3.0LX STD (haute 1.98 x 1.98 x 4.76 mm)	4
				COJINETE BIELA	CONNECTING ROD BEARING	CUSCINETTO BIELLA	COUSSINETS DE BIELLE	
	REC13001	3853149	23-85701	3.0L & LX STD	3.0L & LX STD	3.0L & LX STD	3.0L & LX STD	
	REC13002	3856117	23-85704	3.0L & LX 0.10" / 0.25 mm	3.0L & LX 0.10" / 0.25 mm	3.0L & LX 0.10" / 0.25 mm	3.0L & LX 0.10" / 0.25 mm	
3	REC13024	3853153	23-85705	3.0L & LX 0.20" / 0.51 mm	3.0L & LX 0.20" / 0.51 mm	3.0L & LX 0.20" / 0.51 mm	3.0L & LX 0.20" / 0.51 mm	4
	RM23-804982	3858954	23-804982	3.0LX & GS (Ancho 19 mm)	3.0LX & GS (Width 19 mm)	3.0LX & GS (Larghezza 19 mm)	3.0LX & GS (Largeur 19 mm)	
	REC13003		23-85677	4.1L STD	4.1L STD	4.1L STD	4.1L STD	
	REC13004		23-85680	4.1L 0.10" / 0.25 mm	4.1L 0.10" / 0.25 mm	4.1L 0.10" / 0.25 mm	4.1L 0.10" / 0.25 mm	
4	REC17903	3856443	27-814703	JUNTA	GASKET	GUARNIZIONE	JOINT	1
	FEL17926		27-34209	JUNTA: VÁLVULA 4.1L	GASKET: VALVE PUSH ROD COVER 4.1L	GUARNIZIONE: VALVOLA 4.1L	JOINT SOUPAPE 4.1L	
5	MP0014-401	3853138	814702	TAPA	COVER	COPPERCHIO	COUVERCLE	1
6	MP0014-403	3853955	10-34470	TORNILLO	BOLT	VITE	VIS	4
7	REC8M0068784	3857532	8M0068784	SENSOR PRESIÓN DE ACEITE	OIL PRESSURE SENDER	SENSORE PRESSIONE DELL'OLIO	SONDE PRESION D'HUILE	1
8	REC13005	3852829	23-43293T	COJIENTE ÁRBOL DE LEVAS (Kit de 3)	BEARING: CAMSHAFT (Set of 3)	CUSCINETTO ALBERO A CAMME (Kit de 3)	ROULEMENT D'ARBRE A CAMES (Kit de 3)	3
9		P. 585	P. 303	ACOPLAMIENTO	DAMPER	ACCOPPIAMENTO	ACCOUPLEMENT	1
10	REC26-14240	3852657	26-14240	RETÉN CIGÜEÑAL RR	SEAL OIL, CRANKSHAFT RR	PARAOLIO ALBERO MOTORE RR	JOINT AR DE VILEBREQUIN RR	1
11	REC27-14241	3852656	27-881715	JUNTA PORTA RETÉN	GASKET	PARAOLIO	JOINT	1
				KIT COJINETE CIGÜEÑAL	CRANKSHAFT BEARING KIT	KIT CUSCINETTO ALBERO MOTORE	KIT PALIER VILEBREQUIN	
	REC13006	3856731	23-818469001	3.0L STD	3.0L STD	3.0L STD	3.0L STD	
12	REC13007		23-818471	3.0L 0.10" / 0.25 mm	3.0L 0.10" / 0.25 mm	3.0L 0.10" / 0.25 mm	3.0L 0.10" / 0.25 mm	1
	REC13026		23-818472	3.0L 0.20" / 0.51 mm	3.0L 0.20" / 0.51 mm	3.0L 0.20" / 0.51 mm	3.0L 0.20" / 0.51 mm	
	REC13008		23-85675	4.1L STD	4.1L STD	4.1L STD	4.1L STD	
	REC13009		23-85713	4.1L 0.10" / 0.25 mm	4.1L 0.10" / 0.25 mm	4.1L 0.10" / 0.25 mm	4.1L 0.10" / 0.25 mm	
13	REC27-49953	3852691	27-49953	JUNTA: TAPA DISTRIBUCIÓN	GASKET: DISTRIBUTOR CAP	GUARNIZIONE: COPPERCHIO DISTRIBUZIONE	JOINT: CARTER DE DISTRIBUTION	1
14	REC59341A1	3853135	59341A1	TAPA: DISTRIBUIDOR 181	COVER: TIMING 181	COPPERCHIO: DISTRIBUZIONE 181	CARTER DISTRIBUTION 181	1
15	MP0025-004	3852662	55045T	BADAMPER: COUPLEAL181	BALANCER: HARMONIC 181	DAMPER: COUPLEAL 181181	AMORTISSEUR DE VIBRATION 181	1
16	REC3853341	3853341	26-97335	RETÉN	SEAL OIL	PARAOLIO	JOINT	1
17	REC8M0082988		8M0082988	SENSOR CIGÜEÑAL MPI	CRANKSHAFT MPI SENSOR	SENSORE ALBERO MOTORE MPI	SONDE VILEBREQUIN MPI	1
18	REC095009		220-801873	VOLANTE 12-3/4"	FLYWHEEL 12-3/4"	VOLANTE 12-3/4"	VOLANT 12-3/4"	1
				CORONA DENTADA	GEAR RING	CORONA DENTATA	COURONNE DENTÉE	
19	REC157-N	3853143		157 dientes Ø12"	157 Teeth Ø 12"	157 denti Ø12"	157 dents Ø12"	1
	REC1685			168 dientes Ø13-3/4"	168 Teeth Ø 13-3/4"	168 denti Ø13-3/4"	168 dents Ø13-3/4"	
				KIT JUNTAS	GASKET SET	KIT GAURNIZIONE	KIT JOINTS	
20	REC17200			2.5L / 3.0L (4L) (CON admisión)	2.5L / 3.0L (4L) (WITH Intake Gasket)	2.5L / 3.0L (4L) (CON aspirazione)	2.5L / 3.0L (4L) (AVEC admission)	1
	FEL17219			4.1L (6L) (SIN admisión)	4.1L (6 In Line) (WITHOUT Intake Gasket)	4.1L (6L) (SENZA aspirazione)	4.1L (6L) (SANS admission)	

181 CID 3.0L

DISTRIBUIDOR **DISTRIBUTOR** **DISTRIBUZIONE** **DISTRIBUTEUR**

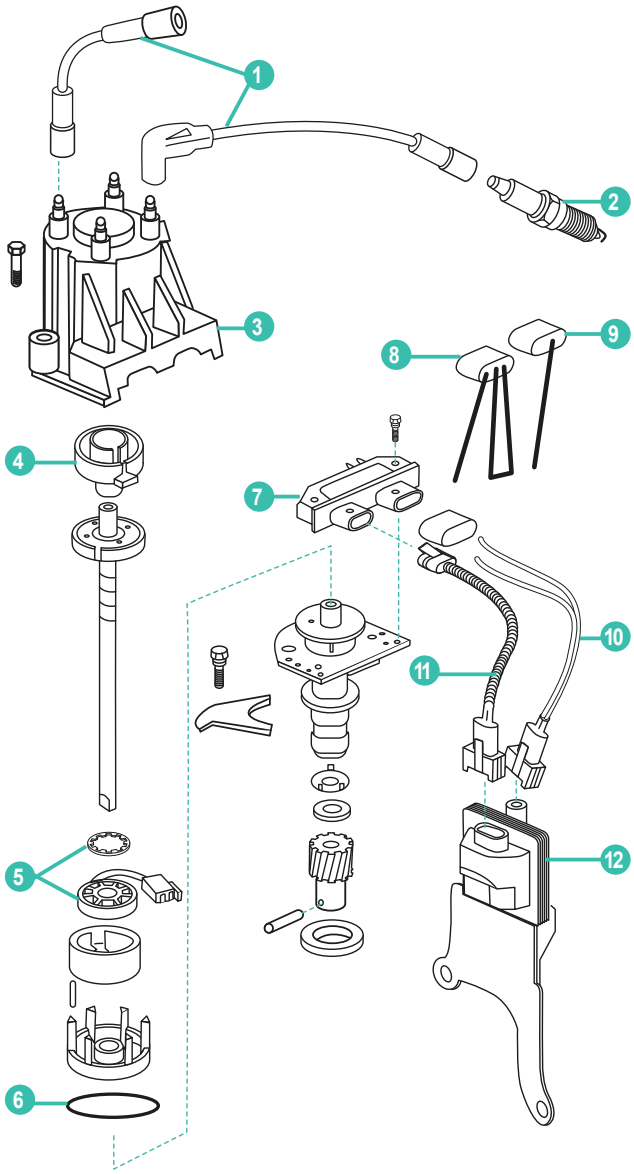

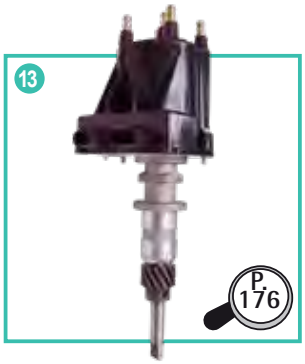

	REF	VOLVO	MERCRUISER					UN.
1	REC15-405	3888324	84-816761Q14	KIT CABLES ARRANQUE	IGNITION WIRE SET	KIT CAVI ACCENSIONE	KIT FAISCEAU DE BOUGIE	1
2		P. 410	P. 163	BUJÍA	SPARK PLUG	CANDELE	BOUGIES	4
3	REC3854260	3854260	811635T3	TAPA DISTRIBUIDOR RX	CAP: DISTRIBUTOR RX	COPERCHIO DISTRIBUZIONE RX	TETE D'ALLUMEUR RX	1
4	REC3854261	3854261	8M6001254	ROTOR DISTRIBUIDOR RX	ROTOR: DISTRIBUTOR RX	ROTORE: DISTRIBUZIONE RX	DOIGT D'ALLUMEUR RX	1
5	REC3854001	3854001	811639T	MÓDULO IMPULSOS	MODULE	MODULO	MODULE D'ALLUMAGE	1
6	REC27-87707	3852660	27-87707	JUNTA	GASKET	GUARNIZIONE	JOINT	1
7	REC3854003	3854003	811637001	MÓDULO: DISTRIBUIDOR DELCO	MODULE: DISTRIBUTOR DELCO	MODULO DISTRIBUZIONE DELCO	MODULE D'ALLUMEUR DELCO	1
8	REC91-888863	885163	91-888863	PUENTE DE DISTRIBUCIÓN	TIMING JUMPER: IGNITION	PONTE DI DISTRIBUZIONE	TIMING JUMPER ALLUMAGE DELCO HEI/EST	1
9	REC294005		807964A1	CABLE ARRANQUE: INTERRUPTOR	IGNITION WIRE: SHIFT INTERUPTER	CAVO ACCENSIONE: INTERRUTTORE	FAISCEAU POUR SHIFT INTERRUPTEUR	1
10	REC500442			CABLE ALIMENTACIÓN BOBINA	WIRE LEAD: COIL TO DIST.	CAVI: BOBINA DISTRIBUZIONE	FAISCEAU POUR BOBINE	1
11	REC84-817376T01	3854084	84-817376T01	CABLE: BOBINA-DISTRIBUIDOR	WIRE LEAD: COIL HARNESS-DISTRIBUTOR	CAVO: BOBINA-DISTRIBUTORE	FAISCEAU POUR BOBINE	1
12	REC3854002	3854002	898253T27	BOBINA: DELCO	COIL: DELCO	BOBINA: DELCO	BOBINE D'ALLUMAGE HEI	1
13	REC817377		817377	DISTRIBUIDOR ELECTRÓNICO (3, 4 y 7 incluidos)	DISTRIBUTOR: ELECTRONIC (3, 4 & 7 Included)	DISTRIBUZIONE ELECTRONIC (include 3, 4 e 7)	DISTRIBUTEUR ELECTRONIQUE (3, 4 et 7 inclus)	1

262 CID
V6, 4.3L

CARTER ACEITE | OIL PAN | COPPA OLIO | CARTER D'HUILE





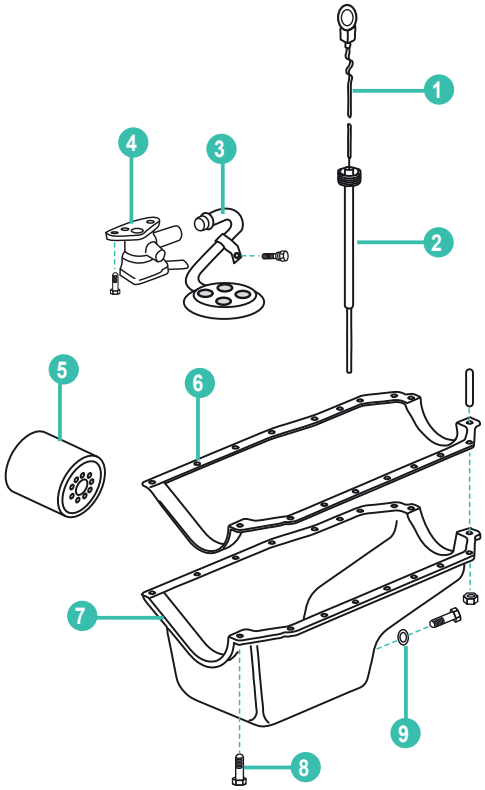

Permatex P. 17

	REF	VOLVO	MERCRUISER					UN.
1	REC551455		861942 17	VARILLA ACEITE 262/350	DIPSTICK 262/350	ASTA DI LIVELLO 262/350	JAUGE D'HUILE 262/350	1
				VARILLA TUBO	DIPSTICK TUBE	ASTA DI LIVELLO TUBO	TIGE TUBO	
2	MP0307-002	856248	12117A5	262 (BLOQUE)	262 (BLOCK)	262 (BLOCCO)	262 (BLOC)	1
	MP0009-002N5	3860214	860209A1	4.3V (1999+) (CÁRTER)	4.3V (1999+) (OIL PAN)	4.3V (1999+) (COPPA OLIO)	4.3V (1999+) (CARTER)	
3	MP0007-256	3853197	809908 1	TUBO Y FILTRO: BOMBA ACEITE	TUBE & SCREEN: OIL PUMP	TUBO E FILTRO: POMPA OLIO	TUBE ET FILTRE: POMPE À HUILE	1
				BOMBA ACEITE	OIL PUMP	POMPA OLIO	POMPE A HUILE	
4	REC14101	3853851	17617	PREVORTEC	PRE VORTEC	PRE VORTEC	PRE VORTEC	1
	RM809907002	3856125	809907002	VORTEC	OIL VORTEC	VORTEC	VORTEC	
5		P. 359	P. 114	FILTRO ACEITE 262	FILTER: OIL 262	FILTRO OLIO: 262	FILTRE A HUILE: 262	1
				JUNTA CÁRTER	GASKET OIL PAN	GUARNIZIONE COPPA OLIO	JOINT DE CARTER	
	REC17970	855729	27-42797	(4 Piezas)	(4 PCS.)	(4 peci)	(4 Pièces)	
6	REC17971	3852655	27-883964T	(1 Pieza)	(1 PC.)	(1 pece)	(1 Pièce)	1
	REC27-142471		27-142471	262 VORTEC (1 Pieza)	262 VORTEC (1 PC.)	262 VORTEC (1 pece)	262 VORTEC (1 pièce)	
	REC21124852	21124852	14247T02	262 VORTEC (1 Pieza) (2008+)	262 VORTEC (1 PC.) (2008+)	262 VORTEC (1 pece) (2008+)	262 VORTEC (1 pièce) (2008+)	
				CARTER	OIL PAN	COPPA OLIO	CARTER D'HUILE	
	REC15351	856386	14244T	262	262	262	262	
7	RM809980T1	21124851	809980T1	ALUMINIO BLOQUE GM 8LK, 8LJ VORTEC	ALUMINUM GM BLOCK 8LK, 8LJ VORTEC	ALLUMINIO BLOCCO GM 8LK, 8LJ VORTEC	AL BLOC GM 8LK, 8LJ VORTEC	1
	RM804912T01	21124851	804912T01	BLOQUE GM 9LK, 9LJ, 0LJ	ALUMINUM GM BLOCK: 9LK,9LJ,0LJ	ALLUMINIO BLOCCO GM 9LK, 9LJ, 0LJ	AL BLOC GM 9LK, 9LJ, 0LJ	
8	RECPNRS-1100	940135	14070	KIT TORNILLO CÁRTER	BOLT SET: OIL PAN	KIT VITE: COPPA OLIO	KIT VIS CARTER	1
9	REC27-49955	3851981	27-49955	JUNTA	GASKET	GUARNIZIONE	JOINT	1
				KIT JUNTAS	GASKET SET	KIT GAURNIZIONE	KIT JOINTS	
10	REC17110			4 juntas cárter 2 juntas retén trasero	4 Oil pan gaskets 2 pcs rear seal	4 guarnizone coppa olio 2 guarnizione tenuta posteriore	4 joints carter 2 joints arrières	1
	REC17116			1 junta cárter retén trasero 1 pieza	1 Oil pan gasket 1 pcs rear seal	1 guarn. coppa olio 1 tenuta posteriore	1 JOINT DE CARTER joint arrière 1 pièce	
				MANGUERA DE VACIADO	DRAIN HOSE	TUBO DI SCARICO	TUYAU DE VIDANGE	
	MPI305-0380			MCM-OMC 1/2"	MCM-OMC1/2"	MCM-OMC 1/2"	MCM-OMC 1/2"	
11	MPI307-0380			VOLVO 3/4"	VOLVO 3/4"	VOLVO 3/4"	VOLVO 3/4"	1
	MPI309-0380			FORD 14 mm	FORD 14mm	FORD 14mm	FORD 14mm	

ÁRBOL DE LEVAS | CAMSHAFT | ALBERO A CAME | ARBRE À CAMES

Permatex P. 17

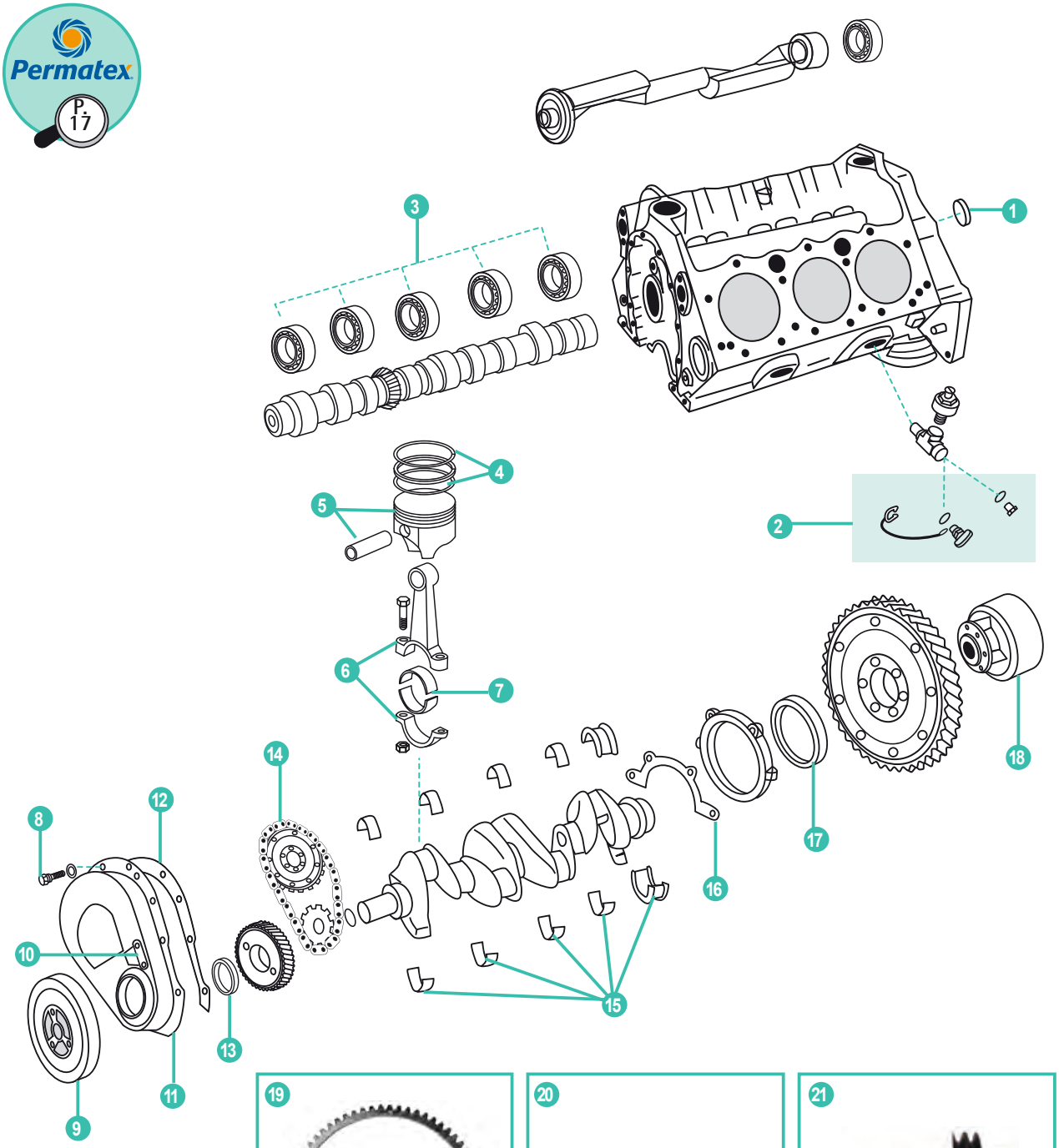

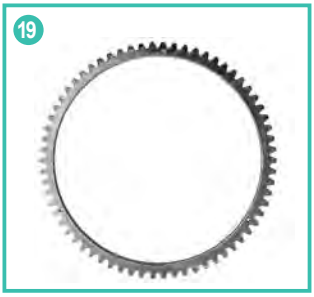









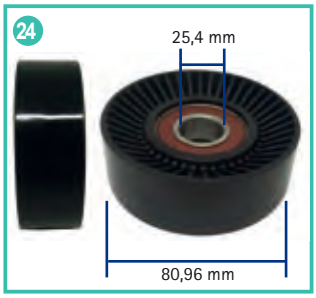



	REF	VOLVO	MERCRUISER					UN.
1	MP0009-208	3853209	22-72640	KIT TAPÓN LATÓN DE EXPANSIÓN	BRASS EXPANSION PLUG KIT	KIT TAPPO ESPANSIONE IN OTTONE	KIT PASTILLE DE SABLAGE	1
2	REC38201	21114522		RACORD DRENAJE COMPLETO	FULL FEETING	RACCORDO COMPLETO	RACORD VIDANGE COMPLET	1
3	REC13014		23-85674	KIT COJINETE: ÁRBOL LEVAS	BEARING KIT: CAMSHAFT	KIT CUSCINETTO: ALBERO A CAMME	KIT ROULEMENT: ARBRE À CAMES	1
				KIT AROS PISTÓN	RING SET	KIT ANELLI PISTONE	KIT DE SEGMENTS	
	REC11001	3853960	39-17464	262 (alto 81 mm)	262 (height 81 mm)	262 (Alt. 81 mm)	262 (hauteur 81 mm)	
	REC11004	21179959	39-801861 1	V6 (1996+ STD)	V6 (1996+ STD)	V6 (1996+ STD)	V6 (1996+ STD)	
4	REC11016			V6 (1996+ 0.30)	V6 (1996+ 0.30)	V6 (1996+ 0.30)	V6 (1996+ 0.30)	6
	REC11005	3853960	39-17464	262/350 (-1995 STD)	262/350 (-1995 STD)	262/350 (-1995 STD)	262/350 (-1995 STD)	
	REC11006	3853961	39-17465	262 (-1995 0.30)	262 (-1995 0.30)	262 (-1995 0.30)	262 (-1995 0.30)	
	REC11011			262/350 (0.40) 71 mm	262/350 (0.40) 71 mm	262/350 (0.40) 71 mm	262/350 (0.40) 71 mm	
				PISTÓN	PISTON	PISTONE	PISTON	
	REC10004	3854219	735-850097	262/350 (-1995 STD) (aros: 1.98x1.98x4.76mm)	262/350 (-1995 STD) (rings: 1.98x1.98x4.76mm)	262/350 (-1995 STD) (anelli: 1.98x1.98x4.76mm)	262/350 (-1995 STD) (seg: 1.98x1.98x4.76 mm)	
	REC10018			262/350 (-1995 0.40) (aros: 1.98x1.98x4.76mm)	262/350 (-1995 0.40) (rings: 1.98x1.98x4.76mm)	262/350 (-1995 0.40) (anelli: 1.98x1.98x4.76mm)	262/350 (-1995 0.40) (seg: 1.98x1.98x4.76 mm)	
5	REC10005	3854221	735-850098	262 (-1995 0.30) (aros: 1.98x1.98x4.76mm)	262 (-1995 0.30) (rings: 1.98x1.98x4.76mm)	262 (-1995 0.30) (anelli: 1.98x1.98x4.76mm)	262 (-1995 0.30) (seg: 1.98x1.98x4.76 mm)	6
	REC10006	21179952	735-835001T	V6 (1996+ STD) (aros: 1.5x1.95x3mm)	V6 (1996+ STD) (rings: 1.5x1.5x3mm)	V6 (1996+ STD) (anelli: 1.5x1.5x3mm)	V6 (1996+ STD) (seg: 1.5x1.5x3 mm)	
	REC10013			V6 (1996+ 0.30) (aros: 1.5x1.95x3mm)	V6 (1996+ 0.30) (rings: 1.5x1.5x3mm)	V6 (1996+ 0.30) (anelli: 1.5x1.5x3mm)	V6 (1996+ 0.30) (seg: 1.5x1.5x3 mm)	
6	MP0009-036	21179974	614-811839T02	BIELA: 262	CONNECTING ROD: 262	BIELLA: 262	BIELLE: 262	6
				COJINETE BIELA	CONNECTING ROD BEARING	CUSCINETTO BIELLA	COUSSINETS DE BIELLE	
7	REC13010	21179992	23-11992001	262	262	262	262	6
	REC13011		23-811858001	262, 0.10 (0.25 mm)	262, 0.10 (0.25 mm)	262 0.10 (0.25 mm)	262 0.10 (0.25 mm)	
8	REC859021	3856133	10-35366	KIT TORNILLOS: TAPA DISTRIBUICIÓN	KIT BOLTS: TIMING COVER	KIT VITE: COPERCHIO DISTRIBUZIONE	KIT DE VIS: CARTER DE DISTRIBUTION	1
				AMORTIGUADOR COUPLEAL	DAMPER COUPLEAL	AMMORTIZZATORE COUPLEAL	DAMPER	
9	MP0009-004LC	3857474	809892T	262 Ø170 mm VORTEC	262 Ø170 mm VORTEC	262 Ø170 mm VORTEC	262 Ø170 mm VORTEC	1
	REC888776T	3859022	888776T	262 (2002+) MPI Ø170mm	262 (2002+) MPI Ø170mm	262 (2002+) MPI Ø170mm	262 (2002+) MPI Ø170mm	
10	MP0011-045	3853195	75435A1	INDICADOR DE DISTRIBUCIÓN	INDICATOR TIMING	INDICATORE DISTRIBUZIONE	INDICATEUR CALAGE DE DSITRIBUTION	1
				TAPA DISTRIBUCIÓN	TIMING COVER	COPERCHIO DISTRIBUZIONE	COUVERCLE DISTRIBURION	
	REC15251	3853194	14249A2	262 (-1995)	262 (-1995)	262 (-1995)	262 (-1995)	
11	REC15252	3855735	809893	4.3V (1997+) (Sin sensor) Plástico	4.3v (1997+) (Without Sensor) Plastic	4.3V (1997+) (senza sensore) Plastica	4.3V (1997+) (Sans sonde) Plastique	1
	REC15253	3859023	8M0069799	4.3V (1997+) (con sensor) Plástico	4.3v (1997+) (With Sensor) Plastic	4.3V (1997+) (con sensore) Plastica	4.3V (1997+) (Avec sonder) Plastique	
	REC21180065	21180065		V6 (2007+) AL	V6 (2007+) AL	V6 (2007+) AL	V6 (2007+) AL	
12	REC27-14250	3852654	27-14250	JUNTA: TAPA DISTRIBUCIÓN	GASKET: ENGINE FRONT COVER	GUARNIZIONE COPERCHIO FRONTALE	JOINT CARTER DE DISTRI	1
13	REC3853341	3853341	26-97335	RETÉN ACEITE: CIGÜEÑAL FRONTAL PRE-VORTEC	SEAL: CRANKSHAFT FRONT OIL PRE-VORTEC	PARAOLIO: ALBERO A GOMITO FRONTALE PRE-VORTEC	JOINT SPI VILEBREQUIN PRE-VORTEC	1
				CADENA DISTRIBUCIÓN	TIMING CHAIN	CATENA DISTRIBUZIONE	KIT CHAINE DISTRIBUTION	
14	REC12502		11985	262 (-1986)	262 (-1986)	262 (-1986)	262 (-1986)	1
	RM883494	3859021	883494	4.3L (1998+)	4.3L (1998+)	4.3L (1998+)	4.3L (1998+)	
				KIT COJINETE CIGÜEÑAL	CRANKSHAFT BEARING KIT	KIT CUSCINETTO ALBERO MOTORE	KIT PALIER VILEBREQUIN	
15	REC13012	3853215	23-818465	STD	STD	STD	STD	1
	REC13013	856342	23-818467	0.10 (0.25 mm)	0.10 (0.25 mm)	0.10 (0.25 mm)	0.10 (0.25 mm)	
16	REC27-14241	3852656	27-14241	JUNTA RETÉN ACEITE: CIGÜEÑAL RR HSG	GASKET: CRANKSHAFT RR OIL SEAL HSG	GUARNIZIONE: PARAOLIO: ALBERO A GOMITO RR HSG	JOINT: JOINT AR DE VILEBREQUIN RR HSG	1
				RETÉN ACEITE CIGÜEÑAL	CRANKSHAFT SEAL	PARAOLIO ALBERO A GOMITO	JOINT HUILE VILEBREQUIN	
17	REC26-14240	3852657	26-8M0077606	RR PRE-VORTEC	RR PRE-VORTEC	RR PRE-VORTEC	RR PRE-VORTEC	1
	RM26-879194364	3858698	26-879194364	RR VORTEC Y MPI	RR VORTEC & MPI	RR VORTEC E MPI	RR VORTET ET MPI	
18		P. 585	P. 303	ACOPLAMIENTO	DAMPER	ACCOPPIAMENTO	ACCOUPLEMENT	1
				CORONA DENTADA	GEAR RING	CORONA DENTATA	COURONNE VOLANT MOTEUR	
19	REC157-N			157 dientes Ø12"	157 Teeth Ø12"	157 denti Ø12"	157 dents Ø12"	1
	REC1685	3853143		168 dientes Ø13-3/4"	168 Teeth Ø13-3/4"	168 denti Ø13-3/4"	168 dents Ø13-3/4"	
				KIT JUNTAS	GASKET SET	KIT GUARNIZIONE	KIT JOINTS	
20	REC17210			Excepto motores eje equilibrado	Except balanced shaft	Eccetto motori asse equilibrato	Sauf moteurs à arbre d'équilibrage	1
	REC17211			Motores eje equilibrado	Balanced shaft engines	Motori asse equilibrato	Moteurs à arbre d'équilibrage	
21	MP514516	855283		POLEA DE LA BOMBA DE DOBLE RANURA Ø150 mm	DUAL GROOVE PUMP PULLEY Ø150 mm	PULEGGIA POMPA DOPPIA SCANALATURA Ø150mm	POULIE POMPE DE BRASSAGE Ø 150 mm	1
22	MP514693	835407	807730	POLEA CIGÜEÑAL DOBLE RANURA Ø 173 mm	DUAL GROOVE CRANK PULLEY Ø 173 mm	PULEGGIA ALBERO MOTORE, DOPPIA SCALANATURA Ø 173 mm	POULIE DE VILEBREQUIN 2 GORGES Ø 173 mm	1
23	REC807757T	3860201	807757T	POLEA SERPENTINA MCM (Plástico) 3" OD	SERPENTINE PULLEY MCM (Plastic) 5" OD	PULEGGIA A SERPENTINA MCM (plastica) 5" OD	POULIE COMPOSITE SERPENTINE 5" OD	1
24	REC8M6500024	865598	8M6500024	POLEA	PULLEY	PULEGGIA	POULIE	1
25	REC864297T01	3858979	864297T01	SENSOR POSICIÓN CIGÜEÑAL	CRANKSHAFT SENSOR	SENSORE POSIZIONE ALBERO MOTORE	SONDE POSITION VILEBREQUIN	1
	REC21124849	21124849						

CULATA | CYLINDER HEAD | TESTATA | CULASSE

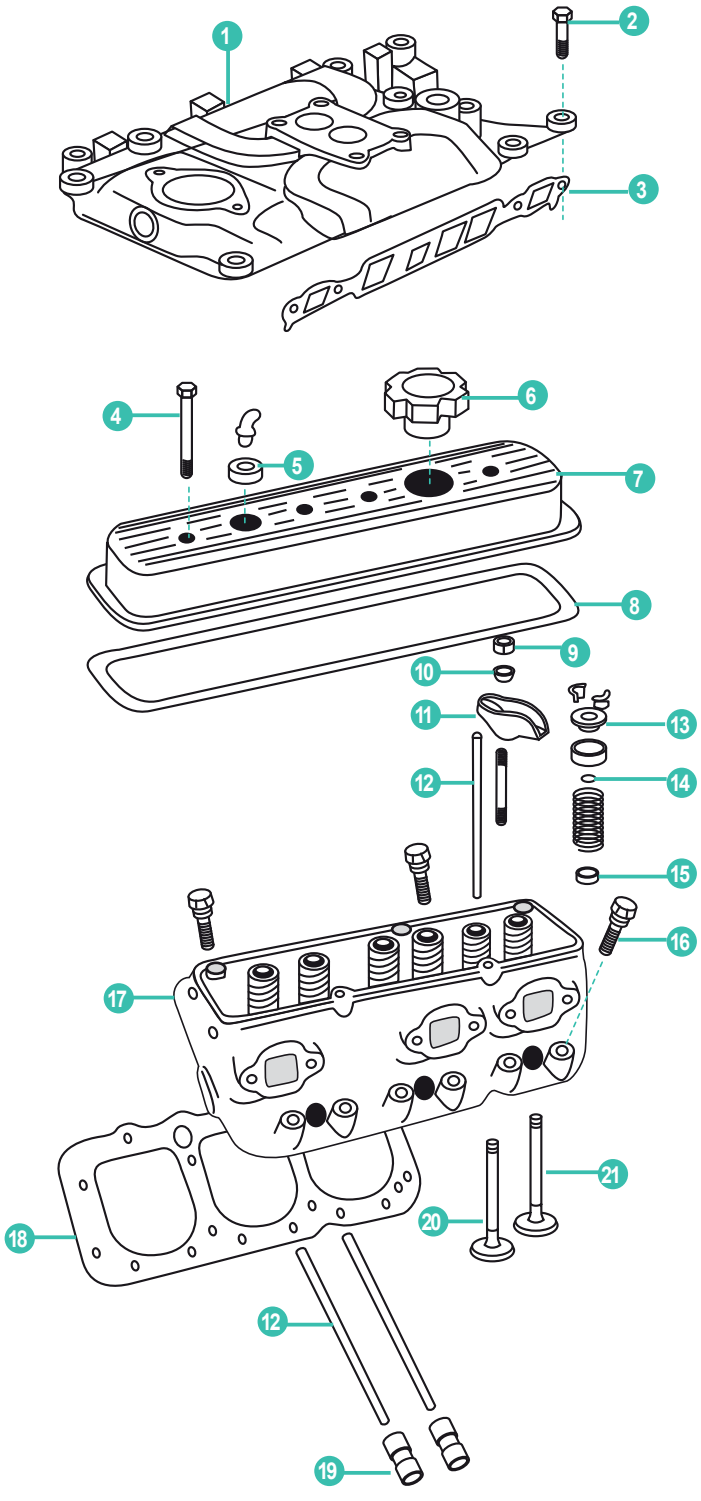



REF
REC27-99757

Permatex

P. 17

	REF	VOLVO	MERCRUISER					UN.
				COLECTOR ADMISIÓN	INTAKE MANIFOLD	COLLETTORE ASPIRAZIONE	COLLECTEUR D'AMISSION	
1	MP425036	3855806	824330T1	VORTEC 4BBL	VORTEC 4BBL	VORTEC 4BBL	VORTEC 4BBL	1
	MP425024	3855805	824324T	VORTEC 2BBL	VORTEC 2BBL	VORTEC 2BBL	VORTEC 2BBL	
2	MP001204	3856765	10-835004	TORNILLO: COLECTOR ADMISIÓN	BOLT: INTAKE MANIFOLD	VITE: COLLETTORE ASPIRAZIONE	VIS	8
3	REC17210	857177	27-11977	JUNTA COLECTOR ADMISIÓN	GASKET: INTAKE MANIFOLD	GUARNIZIONE: COLLETTORE ASPIRAZIONE	JOINT	2
	REC824326002	3855807	27-824326002	JUNTA: COLECTOR ADMISIÓN VORTEC	GASKET: INTAKE MANIFOLD VORTEC	GUARNIZIONE: COLLETTORE ASPIRAZIONE VORTEC	JOINT VORTEC	
4	MP0009-107	3856135	10-17344	TORNILLO: TAPA VÁLVULA	BOLT: VALVE COVER	VITE: COPERCHIO VALVOLA	VIS: CACHE CULBUTEUR	6
5	RECTW9760	835415	8M0071559	ANILLO: TAPA VÁLVULA	GROMMET: VALVE COVER	ANELLO: COPERCHIO VALVOLA	BAGUE CACHE CULBUTEUR	2
6	REC6532	3854008	36-18710002	TAPÓN ACEITE	CAP OIL FILL	TAPPO OLIO	BOUCHON HUILE	2
				TAPA VÁLVULA	COVER VALVE	COPERCHIO VALVOLA	CACHE CULBUTEUR	
7	MP0009-194LC	3854948	827150	VORTEC (Con tapón)	VORTEC (With Seal)	VORTEC (Con cappuccio)	VORTEC (avec bouchon)	1
		3854949	827149	VORTEC (Sin tapón)	VORTEC (Without Seal)	VORTEC (Senza cappuccio)	VORTEC (Sans bouchon)	
	RECTW6502T	3854945	14251	PREVORTEC (Con tapón)	PREVORTEC (With Seal)	PREVORTEC(Con cappuccio)	PREVORTEC (avec bouchon)	
	RECTW6502	3854945	14252	PREVORTEC (Sin tapon)	PREVORTEC (Without Seal)	PREVORTEC (Senza cappuccio)	PREVORTEC (Sans bouchon)	
				KIT JUNTAS TAPA VÁLVULA	GASKET KIT, VALVE COVER	KIT GUARNIZIONE COPERCHIO VALVOLA	KIT JOINTS CACHE CULBUTEUR	
8	REC17920	3854300	27-11988	PREVORTEC	PRE VORTEC	PREVORTEC	PREVORTEC	2
	REC17921	3854942	27-827154	VORTEC	VORTEC	VORTEC	VORTEC	
9	MP0007-122	3853004	11-34516	TUERCA: BRAZO BALANCÍN	NUT: ROCKER ARM	DADO: BILANCERE	ECROU DE CULBUTEUR	12
10	RM59340	3853198	59340	ROTOR: VÁLVULA	ROTATOR: VALVE	ROTORE: VALVOLA	COUPELLE POUR SOUPAPE ECHAPPEMENT	6
11	REC10352	3853158	35329	BRAZO BALANCÍN	ARM: ROCKER	BILANCERE	CULBUTEUR	12
				VARILLA	PUSH ROD	ASTA DI BIELLA	TIGE DE CULBUTEUR	
12	REC12002	3853170	17739	262 (1986+)	262 (1986+)	262 (1986+)	262 (1986+)	12
	REC12000	3853157	99948	262 (-1986)	262 (-1986)	262 (-1986)	262 (-1986)	
13	MP0007-378	3853229	48348	TAPÓN: MUELLE VÁLVULA	CAP: VALVE SPRING	TAPPO: MOLLA VALVOLA	BOUCHON: RESSORT DE SOUPAPE	6
14	REC26-34217	3854956	26-34217	RETÉN	SEAL	TENUTA	JOINT	12
15	REC70817B	3853226	26-97664	RETÉN: VÁSTAGO VÁLVULA DE ADMISIÓN	SEAL: INTAKE VALVE STEM	GUARNIZIONE: ASTA VALVOLA ASPIRAZIONE	JOINT DE QUEUE DE SOUPAPE	6
				TORNILLO CULATA	CYLINDER HEAD BOLT	VITE TESTATA	VIS DE CULASSE	
16	MP0007-027	3856122	10-11966	LARGO (,437-14x1.750)	LONG (,437-14x1.750)	LUNGO (,437-14x1.750)	LONG (,437-14X1.750)	10
	MP0007-028	3856123	10-11967	MEDIANO (,437-14x3.00)	MEDIUM (,437-14x3.00)	MEDIO (,437-14x3.00)	MOYEN (,437-14X3.00)	4
	MP0007-029	3856124	10-11968	CORTO	SHORT	CORTO	COURT	12
17		P. 52		CULATA	CYLINDER HEAD	TESTATA	CULASSE	2
18	REC17010	3854299	27-879150140	JUNTA: CULATA	GASKET: CYLINDER HEAD	GUARNIZIONE: TESTATA	JOINT DE CULASSE	2
				EMPUJADOR VÁLVULA	LIFTER VALVE	ALZA VALVOLA	POUSSOIR HYDRAULIQUE	
19	REC14001	3855811	811844T	4.3 VORTEC (1996+)	4.3 VORTEC (1996+)	4.3 VORTEC (1996+)	4.3 VORTEC (1996+)	12
	REC14001	856397	17340T	262 (1987+)	262 (1987+)	262 (1987+)	262 (1987+)	
	REC14000	3853954	72638	262 (-1986)	262 (-1986)	262 (-1986)	262 (-1986)	
				VÁLVULA ADMISIÓN	INTAKE VALVE	VALVOLA ASPIRAZIONE	SOUPAPE ADMISSION	
20	REC13506	841873	97661	262 (49-8,8-124)	262 (49-8,8-124)	262 (49-8,8-124)	262 (49-8,8-124)	6
	REC13507	3855810	809992	262 VORTEC (1993+) (49,2-8,7-124)	262 VORTEC (1993+) (49,2-8,7-124)	262 VORTEC (1993+) (19.2-8,7-124)	262 VORTEC (1993+) (19.2-8,7-124)	
				VÁLVULA ESCAPE	EXHAUST VALVE	VALVOLA SCARICO	SOUPAPE D'ECHAPPEMENT	
21	REC13502	856368	85803	262 (38,2-8,8-125,2)	262 (38,2-8,8-125,2)	262 (38,2-8,8-125,2)	262 (38,2-8,8-125,2)	6
	REC13505	3855808	824317 1	262 VORTEC (1993+) (38-8,7-125)	262 VORTEC (1993+) (38-8,7-125)	262 VORTEC (1993+) (38-8,7-125)	262 VORTEC (1993+) (38-8,7-125)	

CARBURACIÓN | CARBURATION | CARBURAZIONE | CARBURATION

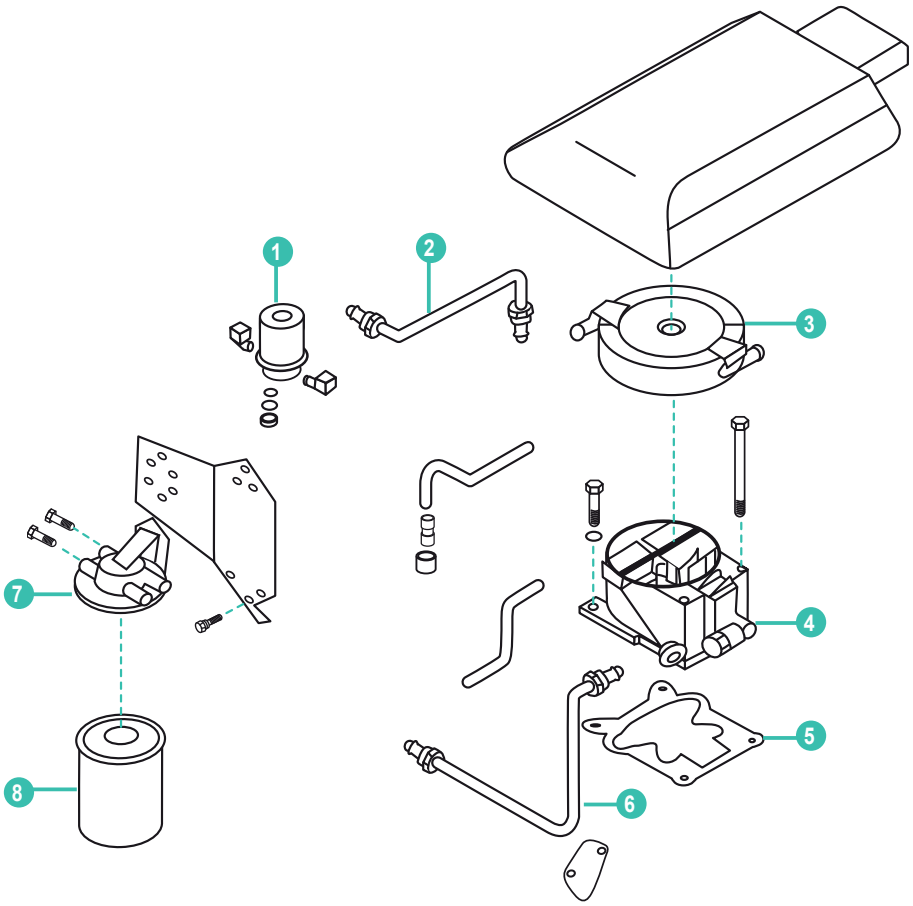



REF
REC18-8114
REC18-8115

	REF	VOLVO	MERCRUISER					UN.
1		P. 372	P. 124	BOMBA COMBUSTIBLE	FUEL PUMPS	POMPA CARBURANTE	POMPE A CARBURANT	1
2	MP429415			TUBO BOMBA	FUEL LINE: SEP-PUMP PORT	TUBO POMPA	TUYAU POMPE	1
3	REC805298A1	3854026	805016A1	PARALLAMAS 262/350 STD	FLAME ARRESTOR 262/350 STD	ANTIFIAMMA 262/350 STD	PARE FLAMME	1
4		P. 379	P. 132	CARBURADOR	CARBURETOR	CARBURATORE	CARBURATEUR	1
	MP426422	3854346		NUEVO CARBURADOR 262 HOLLEY 2 BBL	NEW CARBURETOR 262 HOLLEY 2 BBL	NUOVO CARBURATORE 262 HOLLEY 2 BBL	CARBURATEUR 262 HOLLEY 2 BBL NEUF	
5		P. 380	P. 137	JUNTA CARBURADOR	GASKET CARBURETOR	GUARNIZIONE CARBURATORE	JOINT CARBURATEUR	1
6	MP429905			TUBO BOMBA COMBUSTIBLE A CARBURADOR	FUEL LINE FUEL PUMP TO CARBURETOR	TUBO POMPA CARBURANTE A CARBURATORE	TUYAU POMPE A CARBURANT VERS CARBURATEUR	1
7	REC25000			BRACKET	BRACKET	BRACKET	SUPPORT	1
8		P. 356	P. 111	FILTRO COMBUSTIBLE CON SEPARADOR DE AGUA	FUEL FILTER / WATER SEPARATOR	FILTRO CARBURANTE CON SEPARATORE D'ACQUA	FILTRE SEPARATEUR	1

DISTRIBUIDOR | DISTRIBUTOR | DISTRIBUZIONE | DISTRIBUTEUR

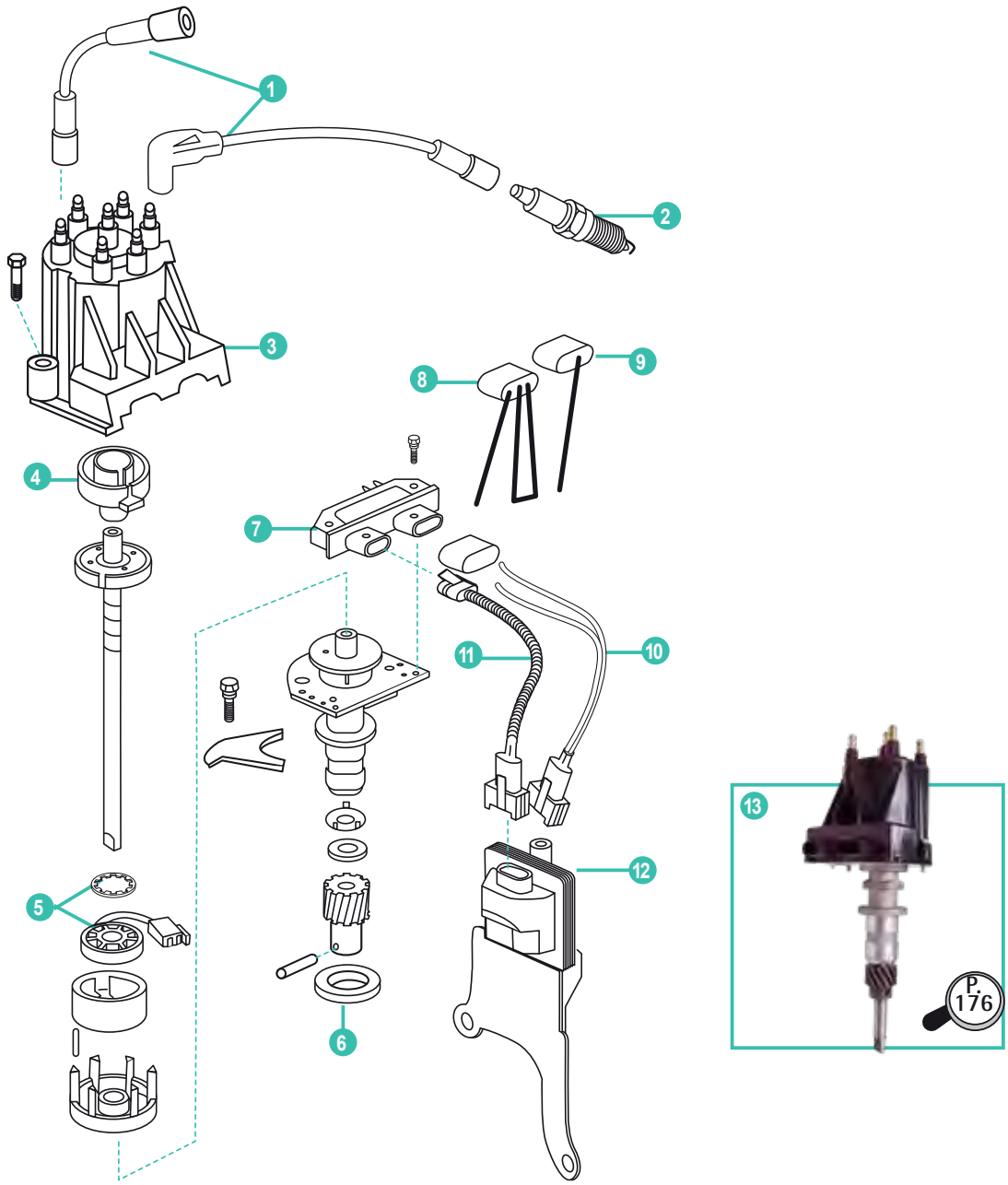

	REF	VOLVO	MERCRUISER					UN.
1		P. 412 3854084	P. 167 84-817386T01	CABLE ARRANQUE: SET V6	IGNITION WIRE: SET V6	CAVO INNIETIONE: SET V6	FAISCEAU DE BOUGIE	7
2		P. 410	P. 163	BUJÍAS	SPARK PLUGS	CANDELE	BOUGIES	6
3	REC3854331	3854331	850484T2	TAPA: V6 DIST	CAP: V6 DIST	COPERCHIO: V6 DIST	TÊTE DE DISTRIBUTEUR: V6 .	1
4	REC3854311	3854311	8M0062084	ROTOR: V6 DIST	ROTOR: V6 DIST	ROTORE: V6 DIST	DOIGT D'ALLUMEUR: V6 DIST	1
5	REC3854001	3854001	811639T	MÓDULO	MODUL	MODULO	MODULE	1
6	REC27-344861	3852109	27-344861	JUNTA	GASKET	GUARNIZIONE	JOINT	1
7	REC3854003	3854003	91-888863	MÓDULO: DELCO DISTRIBUIDOR	MODULE: DELCO DIST	MODULO: DELCO DISTRIBUZIONE	MODULE ALLUMEUR DELCO	1
8	REC91-888863			HERRAMIENTA	TOOL: TIMING	STRUMENTO	OUTIL	1
9	REC294005			CABLE IGNICIÓN: INTERRUPTOR	IGNITION WIRE: SHIFT INTERRUPTER	CAVO ACCENSIONE: INTERRUTTORE	FAISCEAU POUR SHIFT INTERRUPTEUR	1
10	REC500442			CABLE ALIMENTACIÓN BOBINA	WIRE LEAD: COIL	CAVO: BOBINA	FAISCEAU POUR BOBINE	1
11	REC84-817376T01	3854084	84-817376T01	CABLES DE LA BOBINA A DISTRIBUIDOR	WIRE LEAD: COIL HARNESS TO DISTRIBUTOR	CAVI BOBINA A DISTRIBUZIONE	FAISCEAU POUR BOBINE	1
12	REC3854002	3854002	811637001	BOBINA: DELCO	COIL: DELCO E.I.	BOBINA: DELCO	BOBINE D'ALLUMAGE HEI	1
13	REC807964A1		807964A1	DISTRIBUIDOR: 262 (3, 4 y 7 incluidos)	DISTRIBUTOR: 262 (3, 4 & 7 Included)	DISTRIBUZIONE: 262 (3, 4 e 7 Compresi)	DISTRIBUTEUR: 262 (3, 4 e 7 inclus)	1

V8 BLOQUE PEQUEÑO 5.0 & 5.7L | V8 SMALL BLOCK 5.0 & 5.7L | V8 BLOCCO PICCOLO 5.0 & 5.7L | V8 BLOQUE PETIT 5.0 & 5.7L

ÁRBOL DE LEVAS | CAMSHAFT | ALBERO A CAME | ARBRE À CAMES

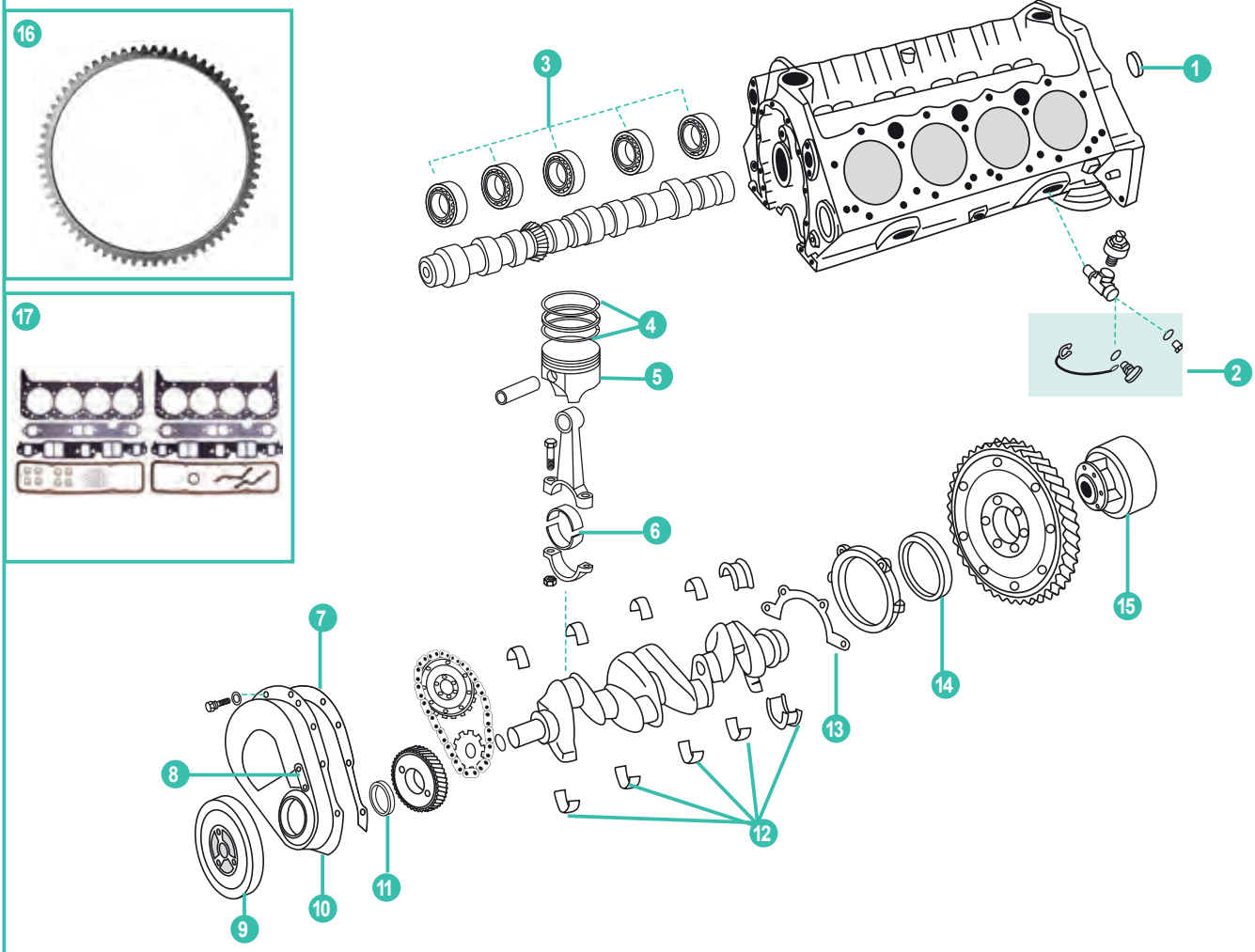







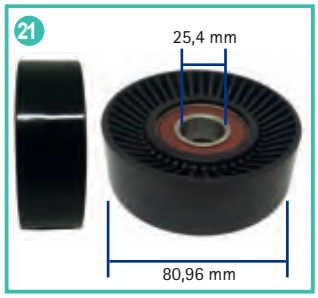

	REF	VOLVO	MERCRUISER					UN.
1	MP0009-208	3853209	22-72640	TAPÓN DE EXPANSIÓN KIT DE LATÓN	BRASS EXPANSION PLUG KIT	TAPPO A ESPANSIONE KIT IN OTTONE	KIT PASTILLE DE SABLAGE	1
2	REC38201	21114522		RACORD DRENAJE COMPLETO	FULL FEETING	RACCORDO COMPLETO	RACCORD VIDANGE COMPLET	1
3	REC13014	3856162	23-85674	COJINETE ÁRBOL DE LEVAS	BEARING CAMSHAFT	CUSCINETTO ALBERO A CAMME	ROULEMENT ARBRE A CAMES	2
				KIT AROS	RING SET	KIT ANELLI	KIT SEGMENTS	
	RM39-802559	3857670	39-802559	5.0L STD 1998+	5.0L STD 1998+	5.0L STD 1998+	5.0L STD 1998+	
	REC11009		39-75609	5.0L STD (1976-97)	5.0L STD (1976-97)	5.0L STD (1976-97)	5.0L STD (1976-97)	
	REC11020			5.0L 0.20 (1976-97)	5.0L 0.20 (1976-97)	5.0L 0.20 (1976-97)	5.0L 0.20 (1976-97)	
	REC11010	826470	39-75981	5.0L 0.30 (1976-97)	5.0L 0.30 (1976-97)	5.0L 0.30 (1976-97)	5.0L 0.30 (1976-97)	
4	REC11004	21179959	39-801861	5.7L STD (1996+)	5.7L STD (1996+)	5.7L STD (1996+)	5.7L STD (1996+)	8
	REC11016		39-17465	5.7L STD 0.30 (1996+)	5.7L STD 0.30 (1996+)	5.7L STD 0.30 (1996+)	5.7L STD 0.30 (1996+)	
	REC11005	857240	39-801861	5.7L STD 71mm	5.7L STD 71mm	5.7L STD 71mm	5.7L STD 71mm	
	REC11006	3853961	39-17465	5.7L 0.30 71 mm	5.7L 0.30 71mm	5.7L 0.30 71 mm	5.7L 0.30 71 mm	
	REC11011			5.7L 0.40 71 mm	5.7L 0.40 71mm	5.7L 0.40 71 mm	5.7L 0.40 71 mm	
	REC11001	3853960	39-17464	5.7L STD 81 mm	5.7L STD 81mm	5.7L STD 81 mm	5.7L STD 81 mm	

	REF	VOLVO	MERCRUISER					UN.
				PISTON	PISTON	PSTONE	PISTON	
	RM735-802557T	3857667	735-802557T	5.0L STD (1998+)	5.0L STD (1998+)	5.0L STD (1998+)	5.0L STD (1998+)	
	REC10015			5.0L 0.20 (1987-97)	5.0L 0.20 (1987-97)	5.0L 0.20 (1987-97)	5.0L 0.20 (1987-97)	
	REC10009	826465	735-6370	5.0L (-1987)	5.0L (-1987)	5.0L (-1987)	5.0L (-1987)	
	REC10010		735-6371	5.0L 0.30 (-1987)	5.0L 0.30 (-1987)	5.0L 0.30 (-1987)	5.0L 0.30 (-1987)	
5	REC10006	21179952	735-850097	5.7L (1996+) (aros: 1.5x1.95x3mm	5.7L (1996+) (rings: 1.5x1.5x3mm)	5.7L (1996+) (anelli: 1.5x1.5x3mm)	5.7L (1996+) (seg: 1.5x1.5x3 mm)	8
	REC10013		735-850098	5.7L 0.30 (1996+) (aros: 1.5x1.95x3mm	5.7L 0.30 (1996+) (rings: 1.5x1.5x3mm)	5.7L 0.30 (1996+) (anelli: 1.5x1.5x3mm)	5.7L 0.30 (1996+) (seg: 1.5x1.5x3 mm)	
	REC10004	3854219	735-850097	5.7L STD (-1995) (aros: 1.98x1.98x4.76mm	5.7L STD (-1995) (rings: 1.98x1.98x4.76mm)	5.7L STD (-1995) (anelli: 1.98x1.98x4.76mm)	5.7L STD (-1995) (seg: 1.98x1.98x4.76 mm)	
	REC10005	3854221	735-9715T1	5.7L 0.30 (-1995) (aros: 1.98x1.98x4.76mm	5.7L 0.30 (-1995) (rings: 1.98x1.98x4.76mm)	5.7L 0.30 (-1995) (anelli: 1.98x1.98x4.76mm)	5.7L 0.30 (-1995) (seg: 1.98x1.98x4.76 mm)	
	REC10018			262/350 (-1995 0.40) (aros: 1.98x1.98x4.76mm	262/350 (-1995 0.40) (rings: 1.98x1.98x4.76mm)	262/350 (-1995 0.40) (anelli: 1.98x1.98x4.76mm)	262/350 (-1995 0.40) (seg: 1.98x1.98x4.76 mm)	
				KIT COJIENTE DE BIELA	BEARING KIT: CONN ROD	KIT CUSCINETTO BIELLA	COUSSINETS DE BIELLE	
	REC13001	3853149	23-85701	5.0 y 5.7	5.0 & 5.7	5.0 y 5.7	5.0 y 5.7	
6	REC13002	3856117	23-85704	0.10 5.0 y 5.7 (0.25 mm)	0.10 5.0 & 5.7 (0.25 mm)	0.10 5.0 e 5.7 (0.25 mm)	0.10 5.0 et 5.7 (0.25 mm)	1
	REC13024	3853153	23-85705	0.20 5.0 y 5.7 (0.51 mm)	0.20 5.0 & 5.7 (0.51 mm)	0.20 5.0 e 5.7 (0.51 mm)	0.20 5.0 et 5.7 (0.51 mm)	
7	REC27-14250	3852654	27-14250	JUNTA TAPA DISTRIBUIDOR	GASKET TIMING COVER	GUARNIZIONE COPERCHIO DISTRIBUZIONE	JOINT DE CARTER DE DISTRIBUTION	1
8	MP0011-045	3853195	75435A1	INDICADOR DE DISTRIBUCIÓN	INDICATOR TIMING	INDICATORE DISTRIBUZIONE	INDICATEUR CALAGE DE DISTRIBUTION	1
				AMORTIGUADOR COUPLEAL	DAMPER: COUPLEAL	AMMORTIZZATORE COUPLEALE	DAMPER	
9	MP0009-004LC	3854023	852946001	5.0L & 4.3 Ø170mm VORTEC	5.0L & 4.3 Ø170mm VORTEC	5.0L & 4.3 Ø170mm VORTEC	5.0L & 4.3 Ø170mm VORTEC	1
	MP0007-004			350 & CA PREVORTEC Ø205 mm	350 & CA PREVORTEC Ø205mm	350 & CA PREVORTEC Ø205mm	350 & CA PREVORTEC Ø205mm	
				TAPA DISTRIBUIDOR	COVER TIMING	COPERCHIO DISTRIBUZIONE	CARTER DE DISTRIBUTION	
	REC15251	3853194	14249A2	SB NR (metálica)	SB NR (metal)	SB NR (metallo)	SB NR (metal)	
10	MP804007		835005	(Plástico) (1996+) sin sensor	(Plastic) (1996+) Without sensor	(Plastica) (1996+) senza sensore	(Plastique) (1996+) sans senseur	1
	REC15254	3862263	863396	(Plástico) (1996+) con sensor	(Plastic) (1996+) With Sensor	(Plastica) (1996+) con sensore	(Plastique) (1996+) avec sensor	
11	REC3853341	3853341	26-97335	RETÉN CIGÜEÑAL SB NR y OR	SEAL FRONT SB NR & OR	TENUTA FRONTALE SB NR e OR	JOINT SPI VILEBREQUIN SB NR ET OR	1
				KIT COJINETE CIGÜEÑAL	BEARING KIT: CRANKSHAFT	KIT CUSCINETTO ALBERO MOTORE	KIT ROULEMENT VILEBREQUIN	
	REC13012		23-85698	NR	NR	NR	NR	
12	REC13015	3862360	23-818465	NR (1996+)	NR (1996+)	NR (1996+)	NR (1996+)	1
	REC13013		23-818467	NR 0.10 (0.25 mm)	NR 0.10 (0.25 mm)	NR 0.10 (0.25 mm)	NR 0.10 (0.25 mm)	
	REC13025		23-818468	NR 0.20 (0.51 mm)	NR 0.20 (0.51 mm)	NR 0.20 (0.51 mm)	NR 0.20 (0.51 mm)	
	REC13016		23-818467	NR 0.10 (1996+) (0.25 mm)	NR 0.10 (1996+) (0.25 mm)	NR 0.10 (1996+) (0.25 mm)	NR 0.10 (1996+) (0.25 mm)	
13	REC27-14241	3852656	27-14241	JUNTA: CIGÜEÑAL RR	GASKET: CRANKSHAFT RR	GUARNIZIONE: ALBERO MOTORE RR	JOINT AR DE VILEBREQUIN RR	1
				RETÉN CIGÜEÑAL	CRANKSHAFT SEAL	PARAOLIO ALBERO MOTORE	JOINT AR DE VILEBREQUIN	
	REC26-14240	3852657	26-14240	RR SB (1996+)	RR SB (1996+)	RR SB (1996+)	RR SB (1996+)	
14	FELBS40013 RECBS40013	841240	26-814622	RR SB (2 p.)	RR SB (2 pcs.)	RR SB (2 peci)	RR SB (2 pièces)	1
	FEL17725	3856926	26-15123	OR (2 p.)	OR (2 pcs.)	OR (2 peCI)	OR (2 pièces)	
15		P. 585	P. 303	ACOPLE	DUMPLER	ACCOPPIAMENTO		1
				CORONA DENTADA	GEAR RING	CORONA DENTATA	COURONNE VOLANT	
16	REC157-N			157 dientes Ø12"	157 Teeth Ø12"	157 denti Ø12"	157 dents Ø12"	1
	REC1685	3853143		168 dientes Ø13 - 3/4"	168 Teeth Ø13-3/4"	168 denti Ø13 - 3/4"	168 dents Ø13 - 3/4"	
				KIT JUNTAS	GASKET KIT	KIT GUARNIZIONE	KIT JOINTS	
	REC17220			5.0L (perímetro)	5.0L (perimeter)	5.0L (perimetro)	5.0L (périmètre)	
	REC17224			5.0L (centro)	5.0L (center)	5.0L (centro)	5.0L (centre)	
17	REC17230			5.7L (perímetro)	5.7L (perimeter)	5.7L (perimetro)	5.7L (périmètre)	1
	REC17214			5.7L (centro)	5.0L (center)	5.7L (centro)	5.7L (centre)	
	REC17232			5.7L GENE+ VORTEC	5.7L GENE+ VORTEC	5.7L GENE+ VORTEC	5.7L GENE+ VORTEC	
18	MP514516	855283		POLEA DE LA BOMBA DE DOBLE RANURA Ø150 mm	DUAL GROOVE PUMP PULLEY Ø150 mm.	PULEGGIA POMPA, DOPPIA SCALANATURA Ø150 mm	POULIE POMPE DE BRASSAGE Ø150 mm	
19	MP514693	835407		POLEA DEL CIGÜEÑAL DE DOBLE RANURA	DUAL GROOVE CRANK PULLEY	PULEGGIA ALBERO MOTORE DE DOPPIO SLOT	POULIE DE VILEBREQUIN 2 GORGES	
20	REC807757T			POLEA SERPENTINA 3" OD MCM (Plástico)	SERPENTINE PULLEY 3" OD MCM (Plastic)	PULEGGIA SERPENTINA 3" OD MCM (Plastica)	POULIE COMPOSITE SERPENTINE 3" OD	
21	REC8M6500024	865598	8M6500024	POLEA	PULLEY	PULEGGIA	POULIE	

Agujeros en la tapa de balancín
Holes in rocker cover
Fori in copperchio di bilanciere
Trous dans le cache-culbuteurs

Permatex P. 17

CULATA | CYLINDER HEAD | TESTATA | CULASSE

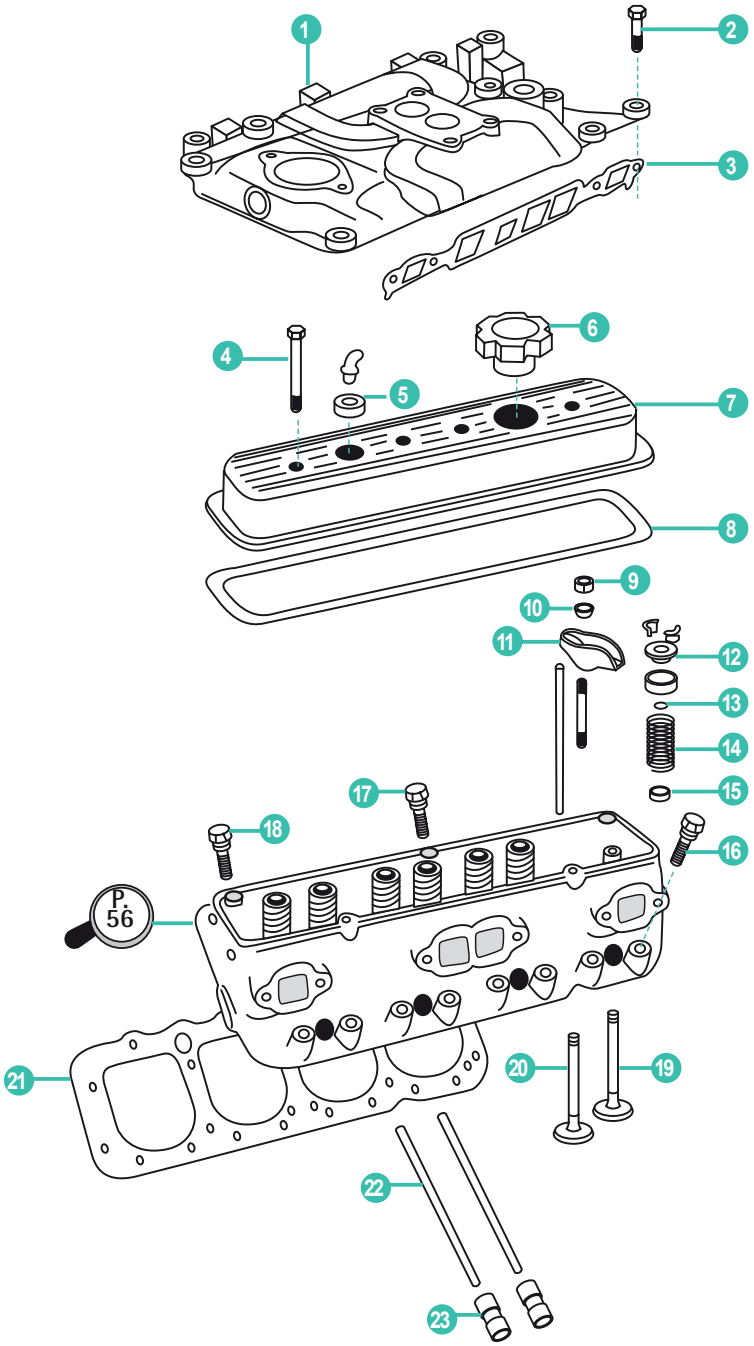



REF
REC27-33395

Permatex
P. 17

	REF	VOLVO	MERCRUISER					UN.
1	REC425062	3856270	807289A1	COLECTOR: ADMISIÓN 5.7 VORTEC 4bbl	MANIFOLD: INTAKE 5.7 VORTEC 4bbl	COLLETTORE ASPIRAZIONE 5.7 VORTEC 4bbl	COLLECTEUR ADMIS.V8 5,7L VORTEC 4 CORPS	1
2	MP001204	940186	10-806681	TORNILLO COLECTOR ADMISIÓN	BOLT INTAKE MANIFOLD	VITE COLLETTORE ASPIRAZIONE	VIS DE CARTER D'ADMISSION	8
				KIT JUNTAS COLECTOR ADMISIÓN	INTAKE MANIFOLD, GASKET KIT	KIT GUARNIZIONE COLLETTORE ASPIRAZIONE	KIT JOINTS COLLECTEUR ADMISSION	
3	REC17320	856365	27-17145	PREVORTEC	PREVORTEC	PREVORTEC	PREVORTEC	2
	REC27-807473A1	3857662	27-807473A1	VORTEC	VORTEC	VORTEC	VORTEC	
4	MP0009-107	3856135	10-17344	TORNILLO TAPA DE VÁLVULA SB	BOLT: VALVE COVER SB	VITE COPERCHIO VALVOLA SB	VIS DE CACHE CULBUTEUR	8
				ANILLO TAPA VÁLVULA	COVER VALVE, GROMMET	COPERCHIO VALVOLA, ANELLO	BAGUE CACHE CULBUTEUR	
5	REC6507			5.0 y 5.7L (1986+)	5.0 & 5.7L (1986+)	5.0 e 5.7L (1986+)	5.0 & 5.7L (1986+)	2
	RECTW9760	835415	8M0071559	5.0 y 5.7L (1978-85)	5.0 & 5.7L (1978-85)	5.0 e 5.7L (1978-85)	5.0 & 5.7L (1978-85)	
6	REC6532	3854008	36-18710002	TAPÓN ACEITE (1986+)	CAP: OIL FILL (1986+)	TAPPO: PARAOLIO (1986+)	BOUCHON D'HUILE (1986+)	1
	REC4804	3853840	17345	TAPÓN ACEITE (1978-85)	CAP: OIL FILL (1978-85)	TAPPO: PARAOLIO (1978-85)	BOUCHON D'HUILE (1978-85)	
				TAPA VÁLVULA	COVER VALVE	COPERCHIO VALVOLA	CACHE CULBUTEUR	
7	REC14200	841212	79961T	5.0 y 5.7L (1987-88) (Agujeros laterales)	5.0 & 5.7L (1987-88) (Bolt around perimeter)	5.0 e 5.7L (1987-88) (Fori nel perimetro)	5.0 e 5.7L (1987-88) (Trous latéraux)	1
	REC14201	841212	79961T	5.0 y 5.7L (-1987) (Agujeros laterales)	5.0 & 5.7L (1987+) (Bolt around perimeter)	5.0 e 5.7L (1987+) (Fori nel perimetro)	5.0 e 5.7L (1987+) (Trous perimetrals)	
	REC14202	3856928	809996	5.0 y 5.7 l (1989+) (1 Tapón)	5.0 & 5.7L (1989+) (1 Seal)	5.0 e 5.7L (1989+) (1 tappo)	5.0 e 5.7L (1989+) (1 bouchon)	
	REC14203	3856928	809995	5.0 y 5.7L (1989+) (2 Tapones)	5.0 & 5.7L (1989+) (2 Seals)	5.0 e 5.7L (1989+) (2 tappi)	5.0 e 5.7L (1989+) (2 bouchons)	
				KIT JUNTAS TAPA VÁLVULA	GASKET KIT, VALVE COVER	KIT GUARNIZIONE COPERCHIO VALVOLA	KIT JOINTS CACHE CULBUTEUR	
8	REC17930	835096	27-52202	5.0 y 5.7L (-1986) (Agujeros laterales)	5.0 & 5.7L (1986+) (Bolt around perimeter)	5.0 e 5.7L (1986+) (Vite nel perimetro)	5.0 et 5.7L (-1986) (Trous latéraux)	1
	REC17931	3852687	27-17467	5.0 y 5.7L (1987+) (Agujeros centrales)	5.0 & 5.7L (-1987) (Central Bolts)	5.0 e 5.7L (-1987) (Vite nel centro)	5.0 y 5.7L (1987+) (Trous centrales)	
9	MP0007-122	3853004	11-34516	TUERCA: BRAZO BALANCÍN	NUT: VALVE ROCKER ARM	DADO: VALVOLA BILANCERE	ECROU DE CULBUTEUR	16
10	RM59340	3853198	59340	ROTOR: VÁLVULA	ROTATOR: VALVE	ROTORE: VALVOLA	COUPELLE POUR SOUPAPE ECHAPPEMENT	8
11	REC10352	3853158	35329	BALANCÍN: VÁLVULA	ROCKER ARM: VALVE	BILANCERE: VALVOLA	CULBUTEUR	16
12	MP0007-378	3853229	48348	TAPÓN: MUELLE VÁLVULA	CAP: INLET VALVE SPRING	TAPPO: MOLLA VALVOLA	COUPELLE RESSORT DE SOUPAPE	8
13	REC26-34217	3854956	26-34217	RETÉN ACEITE: VÁLVULA	SEAL: VALVE STEM OIL	PARAOLIO: VALVOLA	JOINT DE QUEUE DE SOUPAPE	16
14	RM24-483471	21605360	24-48347 1	MUELLE VÁLVULA (1996+)	SPRING: VALVE (1996+)	MOLLA VALVOLA (1996+)	RESSORT DE SOUPAPE (1996+)	16
15	REC70817B	3853226	26-97664	RETÉN: VÁLVULA ADMISIÓN	SEAL: INTAKE VALVE STEM	TENUTA: VALVOLA ASPIRAZIONE	JOINT DE QUEUE DE SOUPAPE	8
16	MP0007-029	3856124	10-11968	TORNILLO CORTO: CULATA	BOLT CYLINDER HEAD SHORT	VITE CORTA TESTATA	VIS COURTE CULASSE	16
17	MP0007-028	3856123	10-11967 1	TORNILLO MEDIO: CULATA	BOLT CYLINDER HEAD MED	VITE MEDIA TESTATA	VIS MOYEN CULASSE	4
18	MP0007-027	3856122	10-11966	TORNILLO LARGO: CULATA	BOLT CYLINDER HEAD LONG	VITE LUNGA TESTATA	VIS LONG CULASSE	14
				VÁLVULA ADMISIÓN	INTAKE VALVE	VALVOLA ASPIRAZIONE	SOUPAPE D'ADMISSION	
19	REC13509			5.0L (47 -8,8 - 125) (2 ranuras)	5.0L (47 -8,8 - 125) (2 slots)	5.0L (47-8,8-125) (2 slot)	5.0L (47-8,8-125) (2 slot)	8
	REC13510	841873		5.7L (49 - 8,8 - 124) (2 ranuras)	5.7L (49 - 8,8 - 124) (2 slots)	5.7L (49-8,8-124) (2 slot)	5.7L (49-8,8-124) (2 slot)	
	REC13507	3855810		5.7L VORTEC (1996+) (49-8,8-124) (1 ranura)	5.7L VORTEC (1996+) (49-8,8-124) (1 slot)	5.7L VORTEC (1996+) (49-8,8-124) (1 slot)	5.7L VORTEC (1996+) (49-8,8-124) (1 slot)	
	REC802555		802555	5.0L VORTEC 1996+ (46,5-8,7-124) (1 ranura)	5.0L VORTEC (1996+) (46,5-8,7-124) (1 slot)	5.0L VORTEC (1996+) (46,5-8,7-124) (1 Slot)	5.0L VORTEC (1996+) (46,5-8,7-124) (1 Slot)	
				VÁLVULA ESCAPE	EXHAUST VALVE	VALVOLA SCARICO	SOUPAPE D'ÉCHAPPEMENT	
20	REC13502	856368	87284	5.0L (38 - 8,7 - 126) (2 ranuras)	5.0L (38 - 8,7 - 126) (2 slots)	V5.0 (38-8,7-126) (2 Slot)	V5.0 (38-8,7-126) (2 Slot)	8
	REC13508			V5.0L & 5.7L (38-9,4-125) (2 ranuras)	5.0L & 5.7L (38-9,4-125) (2 slots)	5.0 e 5.7L (38-9,4-125) (2 Slot)	5.0 e 5.7L (38-9,4-125) (2 Slot)	
	REC13505	3855808		5.0L & 5.7L VORTEC (1996+) (38-8,7-125) (1 ranura)	5.0L & 5.7L VORTEC (1996+) (38-8,7-125) (1 slot)	5.0 e 5.7L VORTEC (1996+) (38-8,7-125) (1 Slot)	5.0 e 5.7L VORTEC (1996+) (38-8,7-125) (1 Slot)	
				JUNTA CULATA	CYLINDER HEAD GASKET	GUARNIZIONE TESTATA	JOINT DE CULASSE	
21	REC17020	3853380	27-75611	5.0L	5.0L	5.0L	5.0L	2
	REC17030	3853380	27-75611	5.7L	5.7L	5.7L	5.7L	
22				VARILLA VÁLVULA	ROD: VALVE	ASTA VALVOLA	TIGE DE CULBUTEUR	16
	REC12000	3853157	99948	(-1986) 5.0 y 5.7L	(-1986) 5.0 & 5.7L	(-1986) 5.0 e 5.7L	(-1986) 5.0 & 5.7L	
23	REC14002	3853954	17340T	EMPUJADOR VÁLVULA	LIFTER: VALVE	ALZA VALVOLA	POUSSOIR HYDRAULIQUE PLAT	16
	REC14001	3856127	72638	EMPUJADOR VÁLVULA (1996+) 5.0 y 5.7L	LIFTER: VALVE (1996+) 5.0 & 5.7L	ALZA VALVOLA (1996+) 5.0 e 5.7L	POUSSOIR HYDRAULIQUE PLAT (1996+) 5.0 et 5.7L	

CARBURACIÓN | CARBURATION | CARBURAZIONE | CARBURATION

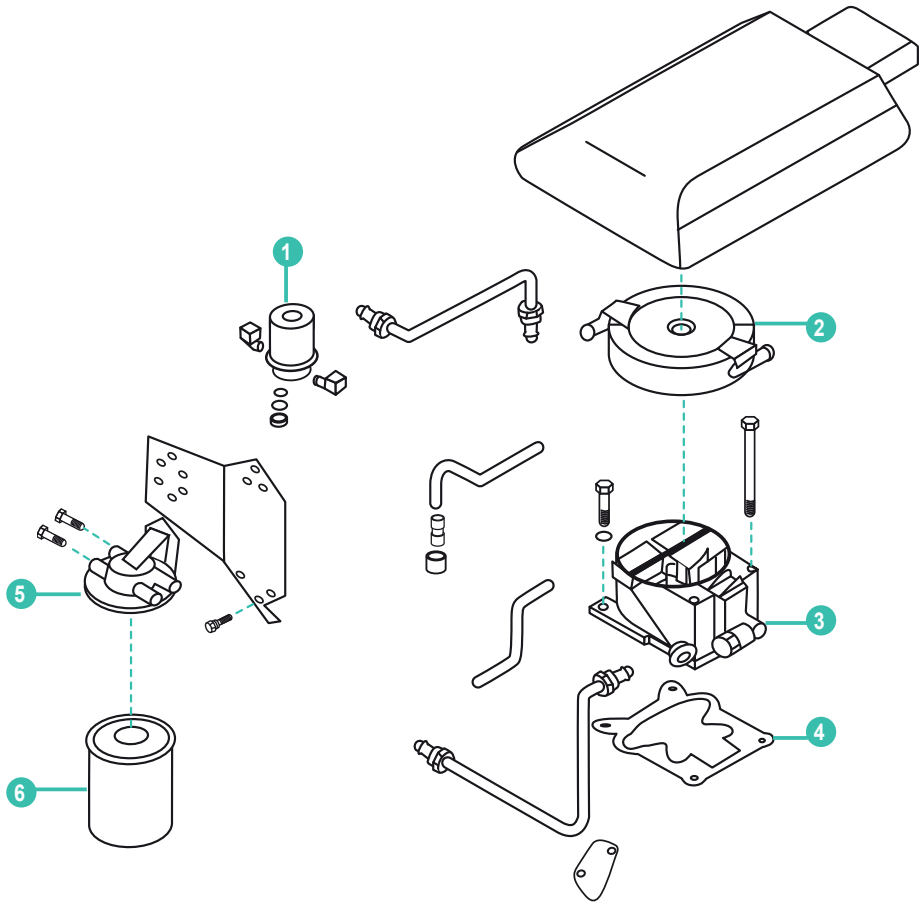



REF
REC18-8114
REC18-8115

	REF	VOLVO	MERCRUISER					UN.
1		P. 372	P. 124	BOMBA COMBUSTIBLE	FUEL PUMP	POMPA CARBURANTE	POMPE A CARBURANT	1
2	REC805298A1			PARALLAMAS 350	FLAME ARRESTOR: 350	ANTIFIAMMA 350	PARE FLAMME	1
3		P. 379	P. 132	CARBURADOR	CARBURETOR	CARBURATORE	CARBURATEUR	1
4		P. 380	P. 137	JUNTA CARBURADOR	GASKET: CARBURETOR	GUARNIZIONE CARBURATORE	JOINT CARBURATEUR	1
5	REC25000			BRAKET	BRACKET	BRACKET	SUPPORT	2
6		P. 356	P. 111	FILTRO COMBUSTIBLE (separador agua)	FILTER: FUEL/WATER SEP.	FILTRO CARBURANTE (separatore d'acqua)	FILTRE SEPARATEUR	1

DISTRIBUIDOR | DISTRIBUTOR | DISTRIBUZIONE | DISTRIBUTEUR

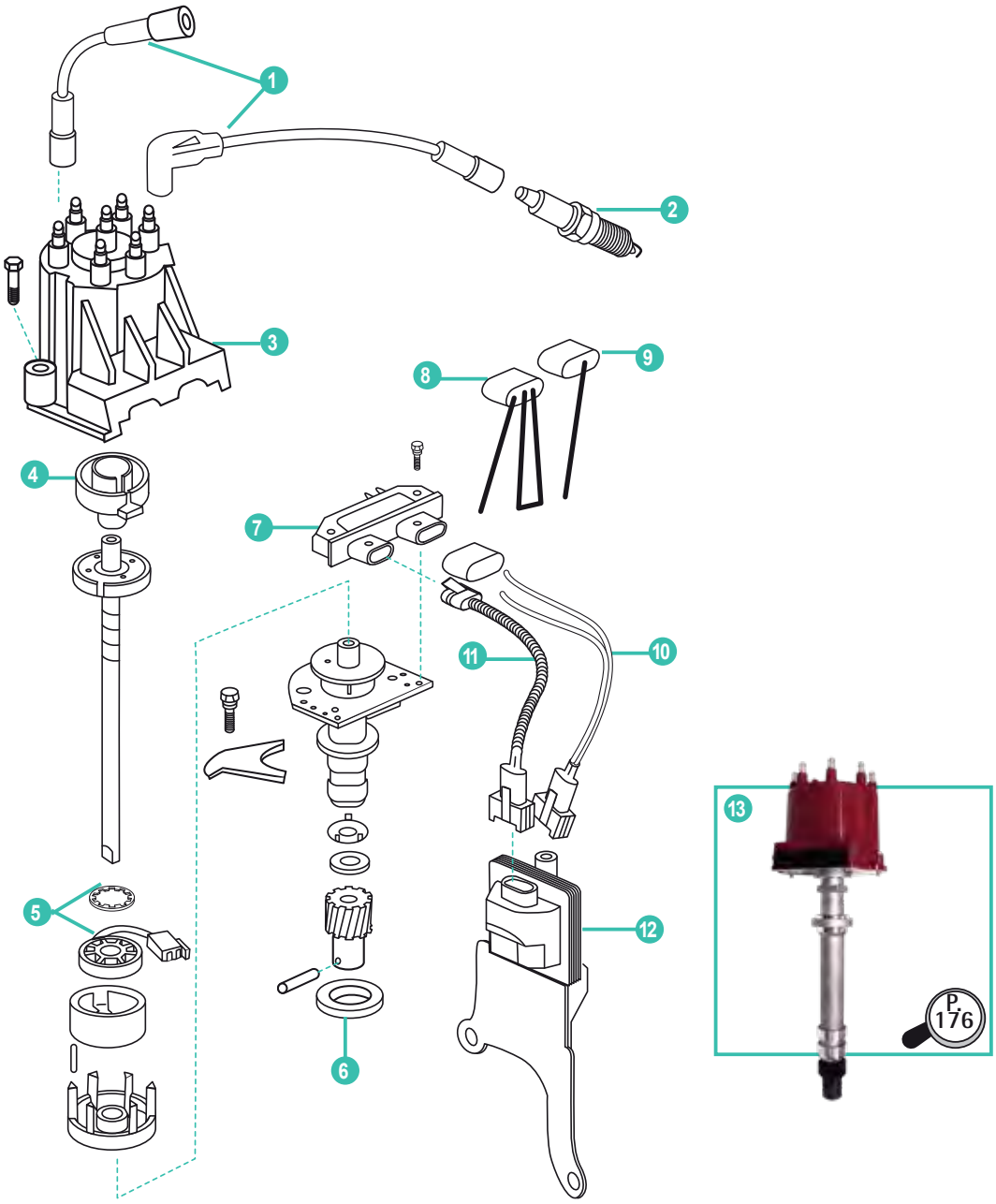

	REF	VOLVO	MERCRUISER					UN.
1		P. 412	P. 167	KIT CABLE IGNICIÓN V8	IGNITION WIRE: SET V8	KIT CAVI INIEZIONE V8	KIT FAISCEAU DE BOUGIE	1
2		P. 410	P. 163	BUJÍAS: V8	SPARK PLUG: V8	CANDELE: V8	BOUGIE: V8	8
3	REC3854548	3854548	808483T3	TAPA: V8 DELCO E.I.	CAP: V8 DELCO E.I.	COPERCHIO V8 DELCO E.I.	TÊTE DE DELCO V8 E.I.	1
4	REC3854549	3862014	8M6001253	ROTOR V8 DELCO E.I.	ROTOR: V8 DELCO E.I.	ROTORE V8 DELCO E.I.	DOIGT D'ALLUMEUR	1
5	REC3854001	3854001	811639T	MÓDULO	MODULE	MODULO	MODULE	1
6	REC27-344861	3852109	27-344861	JUNTA	GASKET	GUARNIZIONE	JOINT	1
7	REC3854003	3854003	811637001	MÓDULO DELCO	MODULE: DELCO	MODULO DELCO	MODULE DELCO	1
8	REC91-888863		91-888863	HERRAMIENTA	TOOL: TIMING	STRUMENTO	OUTIL	1
9	REC294005			CABLE IGNICIÓN: INTERRUPTOR	IGNITION WIRE: SHIFT	CAVO INIEZIONE: INTERRUTTORE	FAISCEAU POUR SHIFT INTERRUPTEUR	1
10	REC500442			CABLES ALIMENTACIÓN BOBINA	WIRE LEAD: COIL DIST	CAVO BOBINA DISTRIBUZIONE	FAISCEAU POUR BOBINE	1
11	REC84-817376T01	3854084	84-817376T01	CABLES BOBINA A DISTRIBUIDOR	WIRE LEAD: COIL HARNESS	CAVI BOBINA A MODULO	FAISCEAU POUR BOBINE	1
12	REC3854002	3854002	898253T27	BOBINA: DELCO E.I.	COIL: DELCO E.I.	BOBINA DELCO E.I.	BOBINE D'ALLUMAGE HEI	
13	REC805222A1	3857449	805222A1	DISTRIBUIDOR V8 DELCO E.I. (3, 4 y 7 incluidos)	DISTRIBUTOR V8 DELCO E.I. (3, 4 & 7 included)	DISTRIBUTTORE V8 DELCO E.I. (3, 4 e 7 compresi)	DISTRIBUTEUR: V8 DELCO E.I. (3, 4 et 7 compris)	

V8 BLOQUE PEQUEÑO 5.0, 5.7L & 6.2L — V8 SMALL BLOCK 5.0, 5.7L & 6.2L — V8 BLOCCO PICCOLO 5.0, 5.7L & 6.2L — V8 BLOQUE PETIT 5.0, 5.7L & 6.2L

CARTER ACEITE — OIL PAN — COPPA OLIO — CARTER







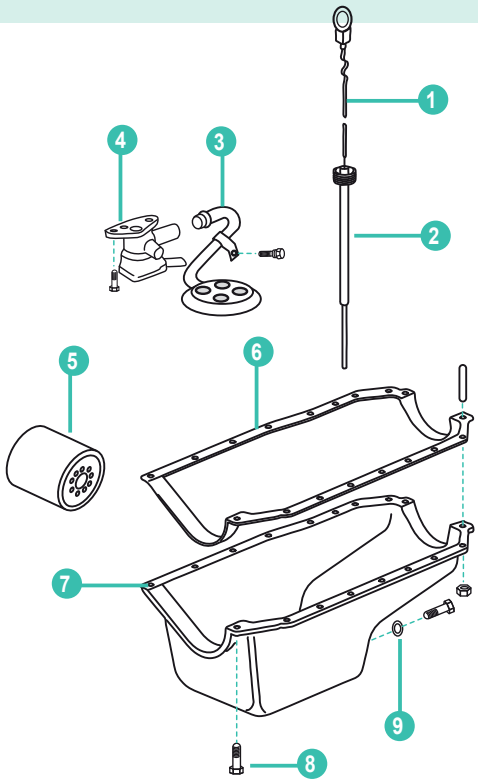

Permatex P. 17

	REF	VOLVO	MERCRUISER					UN.
				VARILLA ACEITE	DIPSTICK	ASTA LIVELLO DEL TUBO	JAUGE D'HUILE	
1	REC551455		861942T2	5.0L, 5.7L	5.0L, 5.7L	5.0L, 5.7L	5.0L, 5.7L	1
	MP371663		861942T3	5.7V (1999+)	5.7V (1999+)	5.7V (1999+)	5.7V (1999+)	
				TUBO VARILLA ACEITE	DIPSTICK TUBE	ASTA LIVELLO DEL TUBO	TUBE TIGE HUILE	
2	MP0307-002		805384T	5.0L, 5.7L	5.0L, 5.7L	5.0L, 5.7L	5.0L, 5.7L	1
	MP373201			PLASTISOLPAN SB	PLASTISOLPAN SB	PLASTISOLPAN SB	PLASTISOLPAN SB	
3	MP0007-256		809908 1	FILTRO ACEITE (con tubo)	SCREEN OIL 350 (with tube)	FILTRO OLIO 350 (con tubo)	FILTRE A HUILE 350 (avec tuyau)	1
4	REC14101	3853851	809907002	BOMBA ACEITE	PUMP OIL 350	POMPA OLIO 350	POMPE A HUILE 350	1
5		P. 359	P. 114	FILTRO ACEITE V8	V8 OIL FILTER	FILTRO OLIO V8	FILTRE A HUILE V8	1
				JUNTAS CÁRTER	GASKET OIL PAN	GUARNIZIONE COPPA OLIO	JOINTS DE CARTER	
	REC17980	855729	27-52236	4 juntas varilla aceite babor	4 gaskets port	4 guarnizioni asta, livello babordo	4 joints de JAUGE D'HUILE Gauche	
6	REC17981	855729	27-52236	4 juntas varilla aceite estribor	4 gaskets stbd.	4 guarnizione asta, livello tribordo	4 joints de JAUGE D'HUILE Droit	1
	REC17982	3856138	27-13865 1	1 junta retén trasero 1 pieza	1 gasket 1 piece rear seal	1 guarnizione 1 tenuta posteriore	1 joint joint d'huile arrière 1 pièce	
	FEL17983	841240	27-85917A1	1 junta retén trasero 2 piezas	1 gasket 2 pieces rear seal	1 guarnizione 2 tenute posteriore	1 joint joint d'huile arrière 2 pièces	
				CARTER	OIL PAN	COPPA OLIO	CARTER	
7	REC15352	3857674	87758A1	350 (-1986)	350 (-1986)	350 (-1986)	350 (-1986)	1
	REC15353	3850822	13840A1	350 (1987+)	350 (1987+)	350 (1987+)	350 (1987+)	
	REC809910		8809910	5.0, 5.7, 6.2 nuevo (MPI)	5.0, 5.7, 6.2 new (MPI)	5.0, 5.2, 6.2 nuovo (MPI)	5.0, 5.2, 6.2 nouveau (MPI)	
8	RECPNRS-1100	940100	10-55715	KIT TORNILLOS	BOLTS KIT	KIT VITI	KIT VIS	1
9	REC27-49955	3851981	27-49955	JUNTA	GASKET	GUARNIZIONE	JOINT	1
				KIT JUNTAS	GASKET SET	KIT GUARNIZIONE	KIT JOINTS	
	REC17120			4 juntas cárter 2 piezas retén	4 oil pan gasket 2 pieces rear seal	4 guarnizione coppa olio 2 tenute posteriori	4 joints de carter 2 pièces de joint spi	
10	REC17125			1 junta cárter 1 pieza retén	1 oil pan gasket 1 piece rear seal	1 guarnizione coppa olio 1 tenuta posteriori	1 jont de carter 1 pièce de joint	1
	FEL17124			1 junta cárter 1 retén tapa distribución plástico	1 oil pan gasket 1 seal plastic dist.cap	1 guarnizione coppa olio 1 coperchio distribuzione in plastica	1 jont de carter 1 joint CARTER DE DISTRIBUTION plastique	
				MANGUERA DE VACIADO	DRAIN HOSE	TUBO DI SCARICO	TUYAU DE VIDANGE	
11	MPI305-0380			MCM-OMC 1/2"	MCM-OMC 1/2"	MCM-OMC 1/2"	MCM-OMC 1/2"	1
	MPI307-0380			VOLVO 3/4"	VOLVO 3/4"	VOLVO 3/4"	VOLVO 3/4"	
	MPI309-0380			FORD 14 mm	Metric FORD 14 mm	FORD 14 mm	FORD 14 mm	

V8 BLOQUE GRANDE 7.4 & 5 8.2L | V8 BIG BLOCK 7.4 & 5 8.2L | V8 BLOCCO GRANDE 7.4 & 5 8.2L | V8 BLOQUE GRAND 7.4 & 5 8.2L

CARTER ACEITE | OIL PAN | COPPA OLIO | CARTER

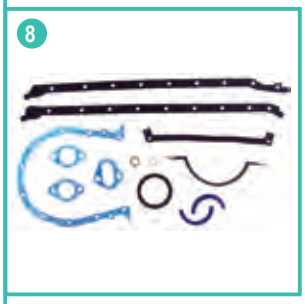



Permatex P. 17

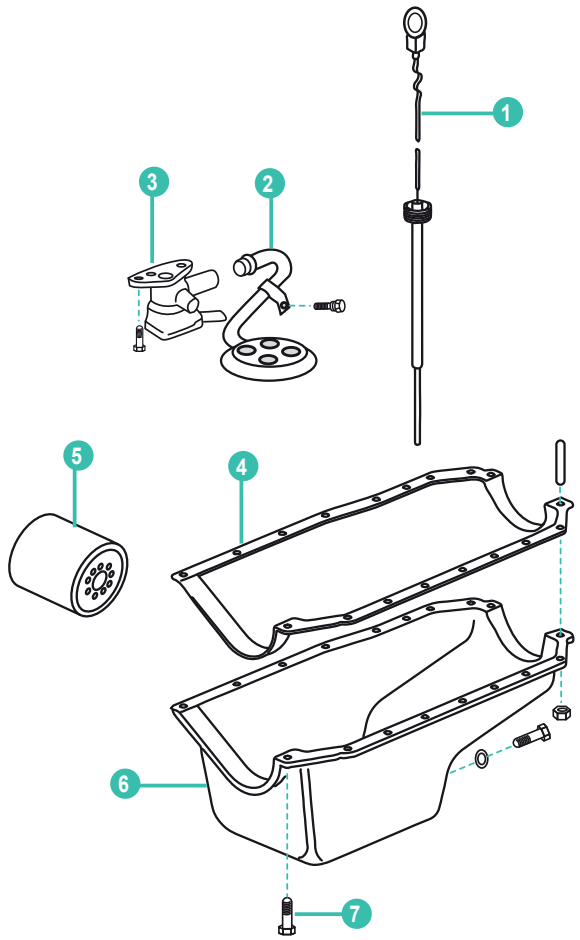

	7.4L	8.2L	VOLVO	MERCRUISER					UN.
1	MP0303-001	MP0303-001	856264	861942T9	VARILLA ACEITE: 454	DIPSTICK: 454	ASTA DI LIVELLO: 454	JAUGE D'HUILE	1
2					FILTRO BOMBA ACEITE	SCREEN: OIL PUMP	FILTRO POMPA OLIO	FILTRE POMPE A HUILE	1
3	REC14102		3855035	808693A1	BOMBA ACEITE: GENE IV	PUMP: OIL GENE IV	POMPA OLIO: GENE IV	POMPE A HUILE: GENE IV	1
	MP0053-255F8		3855035	827643	BOMBA ACEITE GENE V	PUMP: OIL GENE V	POMPA OLIO: GENE V	POMPE A HUILE: GENE V	
4	REC17986	REC17986	3853510	27-845628	JUNTA: CÁRTER GEN V y VI	GASKET: OIL PAN GEN V & VI	GUARNIZIONE: COPPA OLIO, GEN V e VI	JOINT: CARTE GEN V et VI	1
	REC17985	REC17985	856889	27-52550	JUNTA: CÁRTER MKIV	GASKET: OIL PAN MKIV	GUARNIZIONE: COPPA OLIO, MKIV	JOINT DE CARTER MKIV	
5			P. 359	P. 114	FILTRO ACEITE	OIL FILTER	FILTRO OLIO	FILTRE A HUILE	2
6	MP370039		3855990	845668T	CÁRTER 454 PLASTISOL GENE V	OIL PAN: 454 PLASTISOL GENE V	COPPA OLIO 454 PLASTISOL GENE V	CARTER 454 PLASTISOL GENE V	1
7	RECPNRS-1101	RECPNRS-1101			KIT TORNILLOS CÁRTER	BOLT OIL PAN KIT	KIT VITI COPPA OLIO	KIT VIS	1
8	REC17140	REC17140		27-52550	KIT JUNTAS MKIV (4 juntas cárter 2 piezas retén)	GASKET SET MKIV (4 oil pan gaskets 2 rear seal)	KIT GUARNIZIONE MKIV (4 guarnizioni coppa olio 2 pezzi tenuta)	KIT JOINTS MKIV (4 joints carter 2 pièces joint)	1
	FEL17145	FEL17145		27-811566	KIT JUNTAS GENE V (1 junta cárter 1 pieza retén)	GASKET SET GENE V (1 oil pan gasket 1 rear seal)	KIT GUARNIZIONE GENE V (1 guarnizione coppa olio 1 tenuta)	KIT JOINT GENE V (1 JOINT DE CARTER 1 pièce joint)	
	REC17146	REC17146		27-845628	KIT JUNTAS GENE VI	GASKET SET GENE VI	KIT GUARNIZIONE GENE VI	KIT JOINTS GEN VI	
9		MPI305-0380			TUBO DE VACIADO MCM-OMC 1/2"	DRAIN HOSE MCM-OMC 1/2"	TUBO DI SCARICO MCM-OMC 1/2"	TUYAU D'ÉCHAPPEMENT MCM-OMC 1/2"	1
		MPI307-0380			TUBO DE VACIADO VOLVO 3/4"	DRAIN HOSE VOLVO 3/4"	TUBO DI SCARICO VOLVO 3/4"	TUYAU D'ÉCHAPPEMENT VOLVO 3/4"	
		MPI309-0380			TUBO DE VACIADO FORD 14 mm	DRAIN HOSE Metric FORD 14 mm	TUBO DI SCARICO FORD 14 mm	TUYAU D'ÉCHAPPEMENT FORD 14 mm	

ÁRBOL DE LEVAS — CAMSHAFT — ALBERO A CAME — ARBRE À CAMES

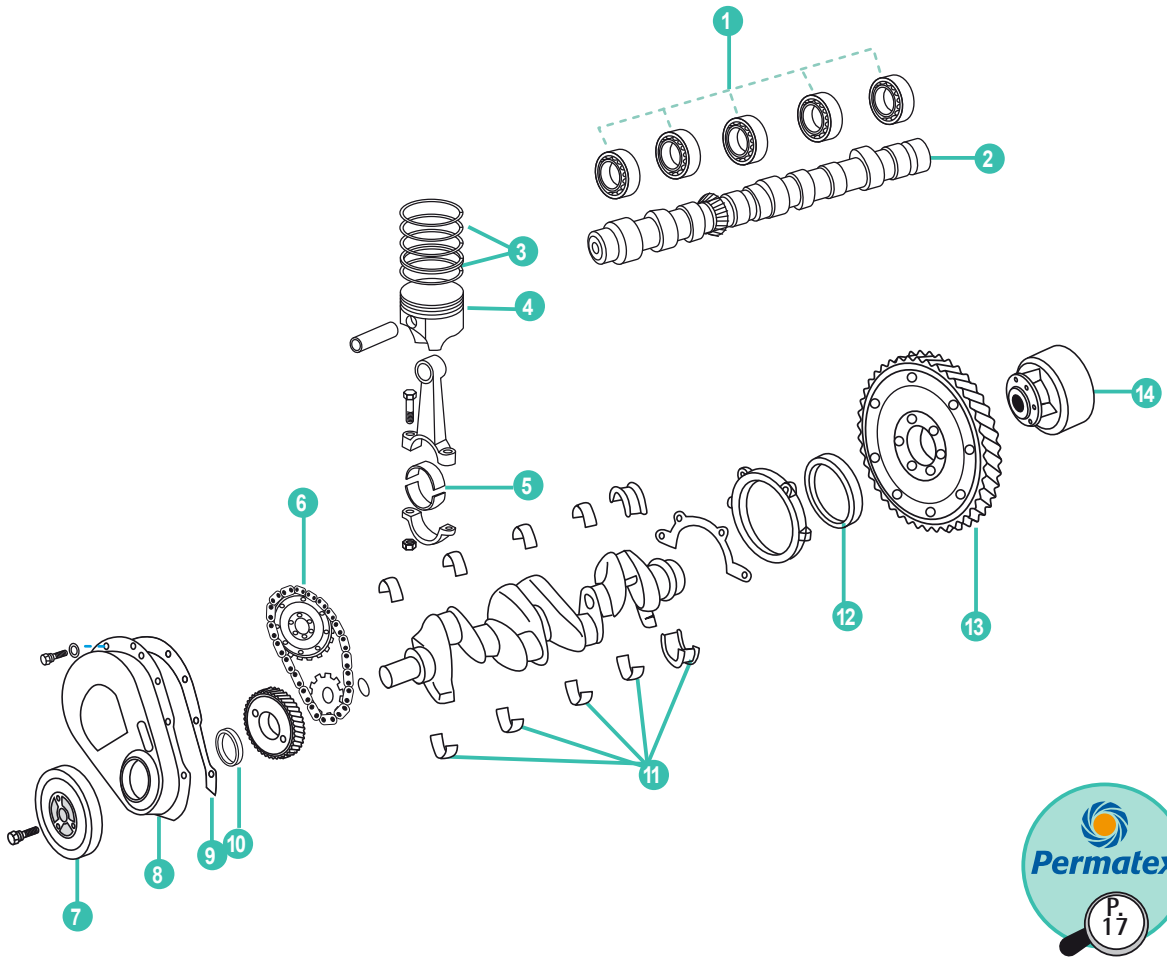

Permatex P. 17





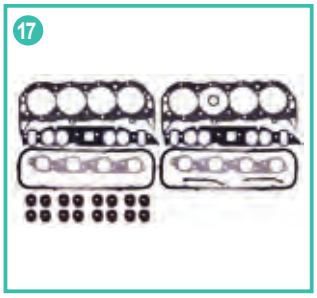



	7.4L	8.2L	VOLVO	MERCRUISER					UN.
					KIT COJINETE ÁRBOL DE LEVAS	BEARING KIT: CAMSHAFT	KIT CUSCINETTO ALBERO A CAMME	KIT PALIER ARBRE À CAMES	
1	REC13017			23-85684	MKIV	MKIV	MKIV	MKIV	1
	REC13017	REC13017		23-85684	GEN V		GENE V	GEN V	
2			3855034	431-4734	ÁRBOL DE LEVAS MKIV y GENE V	CAMSHAFT: MKIV & GENE V	ALBERO A CAMME MKIV e GEN V	ARBRE À CAMES MKIV et GEN V	1
					KIT AROS	RING SET	KIT ANELLI	KIT SEGMENTS	
	REC11012		856591	39-67127	MKIV STD	MKIV Std	MKIV STD	MKIV STD	
	REC11019			39-67127	MKIV STD MAGNUM	MKIV Std Magnum	MKIV STD MAGNUM	MKIV STD MAGNUM	
	REC11013		856592	39-68128	MKIV 030	MKIV 030	MKIV 030	MKIV 030	
	REC11018			39-67128	MKIV 030 MAGNUM	MKIV 030 Magnum	MKIV 030 MAGNUM	MKIV 030 MAGNUM	
3	REC11014			39-827651T	GENE V y VI STD (Usar código GM 4XW, 5XW, 4XX, 5XX, 4XA, 5XA)	GENE V & VI Std (use code GM 4XW, 5XW, 4XX, 5XX, 4XA, 5XA)	GENE V e VI STD (utilizzare il codice GM 4XW, 5XW, 4XX, 5XX, 4XA, 5XA)	GEN V et VI STD (utiliser le code GM 4XW, 5XW, 4XX, 5XX, 4XA, 5XA)	
	REC11015			29-850447	GENE V y VI 030 (Usar código GM 4XW, 5XW, 4XX, 5XX, 4XA, 5XA)	GENE V & VI 030 (use code GM 4XW, 5XW, 4XX, 5XX, 4XA, 5XA)	GENE V e VI 030 (utilizzare il codice GM 4XW, 5XW, 4XX, 5XX, 4XA, 5XA)	GEN V e VI 030 (utiliser le code GM 4XW, 5XW, 4XX, 5XX, 4XA, 5XA)	

	7.4L	8.2L	VOLVO	MERCRUISER					UN.
					PISTON	PISTON	PISTON	PISTON	
4	REC10011		856589	737-879194035	MKIV STD	MKIV Std	MKIV STD	MKIV STD	8
	REC10012		856590	737-6615T 1	MKIV 030	MKIV 030	MKIV 030	MKIV 030	
					COJINETE BIELA	BEARING CONNECTING ROD	CUSCINETTO BIELLA	COUSSINETS DE BIELLE	
5	REC13019			23-85726001	GEN V	GEN V	GEN V	GEN V	8
	REC13018			23-85691	GEN V, GEN V 010 & MKIV 010	GEN V 010 & MKIV 010	GEN V 010 & MKIV 010	GEN V, GEN V 010 et MKIV 010	
					KIT CADENA DISTRIBUIDOR	KIT TIMING CHAIN	KIT CATENA DISTRIBUZIONE	KIT CHAINE DISTRIBUTION	
6	REC12504		856620	43-86481 + 86482 + 75588	MKIV	MKIV	MKIV	MKIV	1
	MP0053-084				7.4 GEN V	7.4 GEN V	7.4 GEN V	7.4 GEN V	
7	MP0053-004F8	MP0053-004F8	976644	811555	AMORTIGUADOR: COUPLEAL 454 NR	DAMPER: COUPLEAL 454 NR	AMMORTIZZATORE: COUPLEALE 454 NR	AMORTISSEUR DE VIBRATION: 454 NR	1
					TAPA DISTRIBUIDOR	COVER TIMING	COPERCHIO DISTRIBUZIONE	CARTER DE DISTRIBUTION	
8	REC15255	REC15255	856605	66215	454 MK IV	454 MK IV	454 MK IV	454 MK IV	1
	MP0053-060	MP0053-060		845610T	GENE V & VI NP (1996+) Junta silicona	GENE VI NP (1996+) Silicone Gasket	GENE VI NP (1996+) Guarnizione in silicone	GENE VI NP (1996+) Joint de silicone	
					JUNTA TAPA DISTRIBUIDOR	GASKET: TIMING COVER	GUARN. COPERCHIO DISTRIBUZIONE	JOINT CARTER DE DISTRIBUTION	
9	REC27-54529	REC27-54529	856608	27-54529	MKIV	MKIV	MKIV	MKIV	1
	REC27-850456			27-850456	GEN V & VI (silicona)	GEN V & VI (silicone)	GEN V & VI (in silicone)	GEN V et VI (silicone)	
10	REC26-8219471	REC26-8219471		26-8219471	RETÉN ACEITE: CIGÜEÑAL FRONTAL GENE IV, V, VI	SEAL: CRANKSHAFT OIL FRONT GENE IV, V, VI	PARAOLIO: ALBERO MOTORE FRONTALE GENE IV, V, VI	JOINT SPI CARTER DE DISTRIBUTION DAVANT GEN IV, V, VI	1
					KIT COJINETE CIGÜEÑAL	KIT BEARING CRANKSHAFT	KIT CUSCINETTO ALBERO MOTORE	KIT ROULEMENT VILEBREQUIN	
11	REC13020	REC13020		23-818473	MKIV, GENE V, GENE VI	MKIV, GENE V, GENE VI	MKIV, GENE V, GENE VI	MKIV, GEN V, GEN VI	1
	REC13021	REC13021		23-818476	MKIV, GENE V, GENE VI 010	MKIV, GENE V, GENE VI 010	MKIV, GENE V, GENE VI 010	MKIV, GEN V, GEN VI 010	
					RETÉN ACEITE CIGÜEÑAL	SEAL: CRANKSHFT OIL	PARAOLIO ALBERO MOTORE	JOINT SPI VILEBREQUIN	
12		REC26-811554		26-811554	TRASERO NR	REAR NR	POSTERIORE NR	ARRIÈRE NR	1
	REC26-14756	REC26-14756	856580	26-14756	454 MKIV	454 MKIV	454 MKIV	454 MKIV	
	FEL17740	FEL17740		26-75980	CONTRAROTACIÓN	OPOSITE ROTATION	CONTROROTANTE	CONTRAROTATION	
13	MP0003-141				VOLANTE GEN V & VI 168 dientes	FLYWHEEL GEN V & VI 168 tooth	VOLANT GEN V & VI 168 denti	VOLANT GEN V & VI 168 dents	1
14			P. 585	P. 303	ACOPLE	DUMPLER	ACCOPPIAMENTO		1
15	MP514720	MP514720			POLEA DE CIGÜEÑAL DE DOBLE RANURA (Ø6-3/4")	DUAL GROOVE CRANKSHAFT PULLEY (Ø6-3/4")	PULEGGIA ALBERO MOTORE DE DOPPIO SLOT (Ø6-3/4")	POULIE VILEBREQUIN (Ø6-3/4")	1
16	REC807757T			807757T	POLEA SERPENTINA MCM (Plástico)	SERPENTINE PULLEY MCM (Plastic)	PULEGGIA SERPENTINA MCM (plastica)	POULIE COMPOSITE	1
					KIT JUNTAS	GASKET SET	KIT GUARNIZIONE	KIT JOINTS	
	REC17240	REC17241			MKIV	MKIV	MKIV	MKIV	
	REC17246				MKIV 385, 400, 420, 425HP	MKIV 385, 400, 420 & 425 HP	MKIV 385, 400, 420, 425 HP	MKIV 385, 400, 420, 425 HP	
	REC17242	REC17242			GENE V (sólo EFI)	GENE V (Only EFI)	GENE V (Solo EFI)	GEN V (Seul EFI)	
	REC17242	REC17243			GENE V & VI (Excepto EFI)	GENE V & VI (Except EFI)	GENE V & VI (salvo EFI)	GEN V & VI (sauf EFI)	
17	REC17242	REC17243			GENE VI (Excepto EFI)	GENE VI (Except EFI)	GENE VI (salvo EFI)	GEN VI (sauf EFI)	1
		REC17248			MKIV	MKIV	MKIV	MKIV	
		REC17248 FEL17249			GENE V	GENE V	GENE V	GEN V	
		REC17207			GENE V EFI	GENE V EFI	GEN V EFI	GEN V EFI	
		REC17207			GENE VI EFI	GENE VI EFI	GEN VI EFI	GEN VI EFI	
					CORONA DENTADA	GEAR RING	CORONA DENTATA	COURONNE VOLANT	
18	REC157-N	REC157-N			157 dientes Ø12"	157 Teeth Ø12"	157 dente Ø12"	157 dents Ø12"	
	REC1685	REC1685			168 dientes Ø13-3/4"	168 Teeth Ø13-3/4"	168 dente Ø13-3/4"	168 dents Ø13-3/4"	

CULATA | CYLINDER HEAD | TESTATA | CULASSE

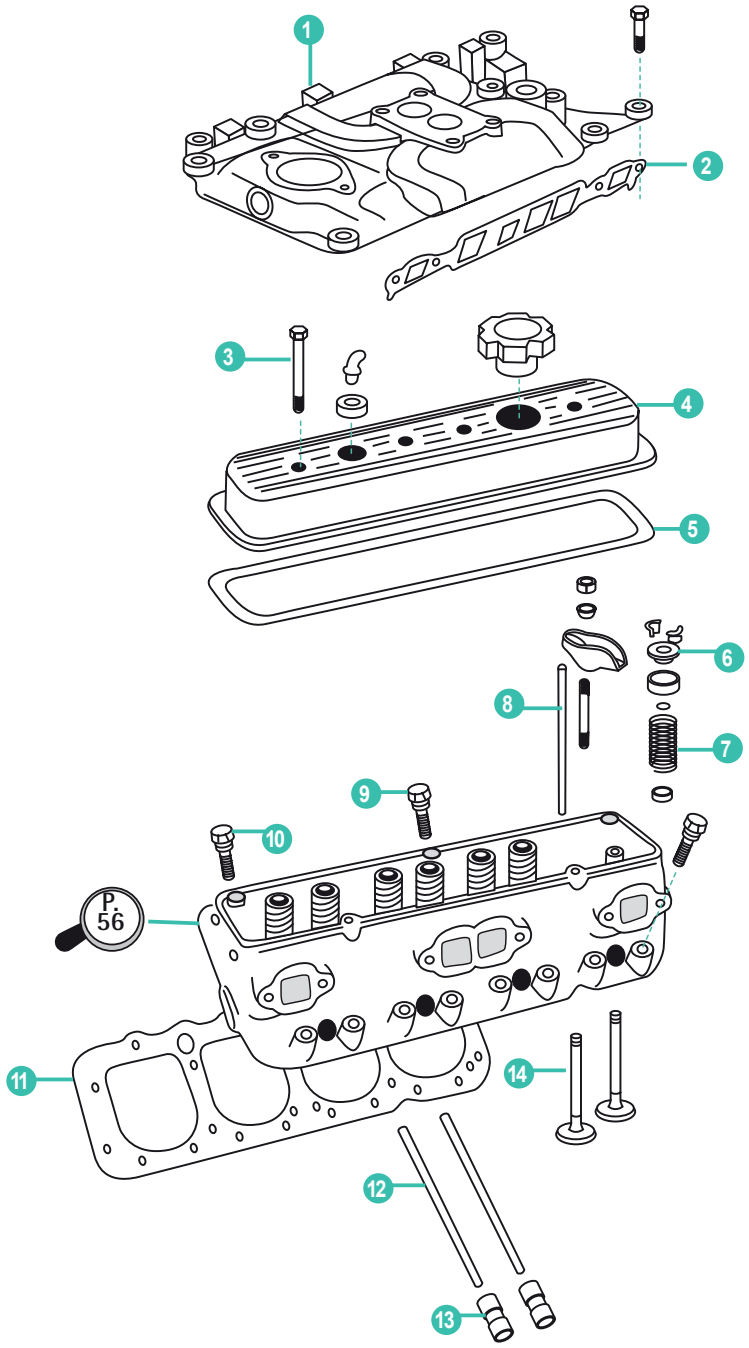



REF
REC27-46820

Permatex
P. 17

	7.4L	8.2L	VOLVO	MERCRUISER					UN.
1	MP425113		3854100	811575T	COLECTOR ADMISIÓN: MKIV y GENE V	MANIFOLD INTAKE: MKIV & GENE V	COLLETTORE ASPIRAZIONE MKIV e GENE V	COLLECTEUR D'ADMISSION MKIV & GEN V	1
		MP425149		72608					
					KIT JUNTAS COLECTOR ADMISIÓN	GASKET KIT, MANIFOLD INTAKE	KIT COLLETTORE ASPIRAZIONE	KIT JOINTS COLLECTEUR ADMISSION	
2	REC17340		856616	27-65184	MKIV, GEN V y VI	MKIV, GEN V & VI	MKIV, GEN V e VI	MKIV, GEN V e VI	2
		REC17341		27-805722A1					
	REC17342		3854095	27-8M0050225	GEN V y VI EFI (-1997)	GEN V & VI EFI (-1997)	GEN V e VI EFI (-1997)	GEN V e VI EFI (-1997)	
		REC17342		27-805403A1					
3	REC912127	REC912127		16-11995	TORNILLO: TAPA VÁLVULA	BOLT: VALVE COVER	VITE: COPERCHIO VALVOLA	VIS: CACHE CULBUTEUR	14
4	REC14204			17671	TAPA VÁLVULA: MKIV	VALVE COVER: MKIV	COPERCHIO VALVOLA: MKIV	CACHE CULBUTEUR: MKIV	2
					KIT JUNTAS TAPA VÁLVULA	GASKET KIT: VALVE COVER	KIT GUARNIZIONE COPERCHIO VALVOLA	KIT JOINTS CACHE CULBUTEUR	
5	REC17937	REC17937	3853513	27-811588	GENE V y VI	GENE V & VI	GENE V e VI	GEN V e VI	2
	REC17935	REC17935	856626	27-49121	MKIV	MKIV	MKIV	MKIV	
6					RETÉN ACEITE VÁLVULA ADMISIÓN	SEAL: VALVE STEM OIL	PARAOLIO VALVOLA ASPIRAZIONE	JOINT SOUPAPE ADMISSION	
	REC26-75988	REC26-75988	3853521	26-75988	MKIV	MKIV	MKIV	MKIV	16
					MUELLE VÁLVULA	SPRING VALVE	MOLLA VALVOLA	RESSORT SOUPAPE	
7	REC11502		3854765	24-14754T	MKIV, GENE V	MKIV, GENE V	MKIV, GENE V	MKIV, GENE V	16
		RM24-801879		24-801879T					
	RM24-850465T		3853543		GENE VI (1996-98)	GENE VI (1996-98)	GENE VI (1996-98)	GEN VI (1996-98)	
8					EJE ÉMBOLO: VÁLVULA ESCAPE	PUSH ROD: EXHAUST VALVE	ASTA DI BIELLA: VALVOLA SCARICO	TIGE CULBUTEUR	
		REC12010		848262	MKIV (Ø8) GEN V	MKIV (Ø8) GEN V	MKIV (Ø8) GEN V	MKIV (Ø8) GEN V	6
9	MP0003-029	MP0003-029	3854767	10-8M0000483	TORNILLO CORTO CULATA	BOLT CYL HEAD SHORT	VITE CORTA TESTATA	VIS COURTE CULASSE	8
10	MP0003-027	MP0003-027	3854766	10-8M0000482	TORNILLO LARGO CULATA	BOLT CYL HEAD LONG	VITE LUNGA TESTATA	VIS LONGUE CULASSE	24
					JUNTA CULATA	GASKET: CYL HEAD	GUARNIZIONE TESTATA	JOINT DE CULASSE	
11	REC17040		856575	27-8M0049045	MKIV	MKIV	MKIV	MKIV	2
		FEL17049		27-811207					
	REC17042		3853511	27-879150141	GEN V y VI	GEN V & VI	GEN V e VI	GEN V e VI	
		REC17042		27-879150139					
		REC17046			385, 400, 420, 425 HP	385, 400, 420, 425 HP	MKIV 385, 400, 420, 425HP	MKIV 385, 400, 420, 425HP	
		REC17048	3853587	24-811546	MKIV, GENE V Y VI	MKIV, GENE V & VI	MKIV, GENE V e VI	MKIV, GEN V et VI	
		REC17048		27-811546	8.9L (525 y 950 HP)	8.9L (252 & 950 HP)	8.9L (252 e 950 HP)	8.9L (252 et 950 HP)	
		REC17048		27-811546	9.4L (750 HP)	9.4L (750 HP)	9.4L (750 HP)	9.4L (750 HP)	
					VARILLA VÁLVULA ADMISIÓN	PUSH ROD: INTAKE VALVE	ASTICELLA VALVOLA ASPIRAZIONE	TIGE DE CULBUTEUR ADMISION	
12	REC12005	REC12006	3853483	848263	MKIV (Ø10)	MKIV (Ø10)	MKIV (Ø10)	MKIV (Ø10)	8
		REC12010		848262	EJE ÉMBOLO: VÁLVULA ESCAPE MKIV (Ø8) GEN V	PUSH ROD: EXHAUST VALVE MKIV (Ø8) GEN V	ASTA DI BIELLA: VALVOLA SCARICO MKIV (Ø8) GEN V	TIGE CULBUTEUR ECHAPPEMENT MKIV (Ø8) GEN V	6
					ELEVADOR VÁLVULA	LIFTER VALVE	ALZA VALVOLA	POUSSOIR HYDRAULIQUE	
13	REC14000		3853954	72638	MKIV	MKIV	MKIV	MKIV	16
		RM811583		811583					
	REC14003	REC14003	3854099	811584	GENE V	GEN V	GENE V	GEN V	
					VÁLVULA ESCAPE	EXHAUST VALVE	VALVOLA SCARICO	SOUPAPE ÉCHAPPEMENT	
14	REC13513		856566	818962	MKIV, GENE V y VI (44-9,2-136) (1988-98) (1988-97) MKIV Y GENE V (48-9,3-136)	MKIV, GEN V & VI (44-9,2-136) (1988-98) (1988-97) MKIV & GENE V (48-9,3-136)	MKIV GENE V e VI (44-9,2-136) (1988-98) (1988-97) MKIV E GENE V (48-9,3-136)	MKIV GEN V et VI (44-9,2-136) (1988-98) (1988-97) MKIV et GEN V (48-9,3-136)	8
		RM816962	3853350	816962					

DISTRIBUIDOR | DISTRIBUTOR | DISTRIBUZIONE | DISTRIBUTEUR

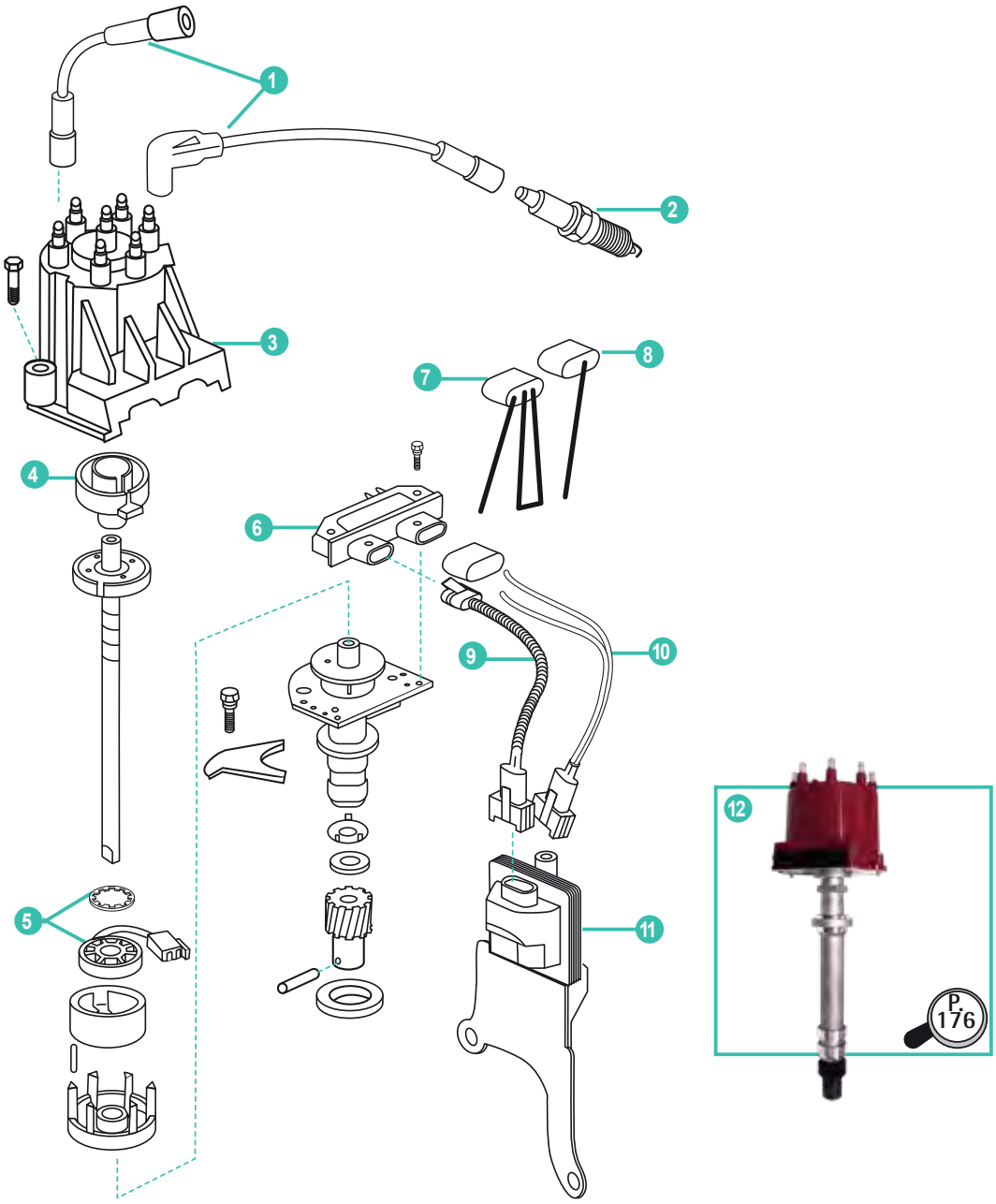

	REF	VOLVO	MERCRUISER					UN.
1		P. 412	P. 167	KIT CABLES ARRANQUE: V8	IGNITION WIRE SET: V8	KIT CAVI ACCENSIONE: V8	KIT FAISCEAU DE BOUGIE	1
2		P. 410	P. 163	BUJÍAS: V8	SPARK PLUG: V8	CANDELE: V8	BOUGIES	8
3	REC3854548			TAPA: DISTRIBUIDOR	CAP: DISTRIBUTOR	TAPPO DISTRIBUZIONE	TETE D'ALLUMEUR	1
4	REC3854549	3854084		ROTOR: DISTRIBUIDOR	ROTOR: DISTRIBUTOR	ROTORE: DISTRIBUZIONE	DOIGT D'ALLUMEUR	1
5	REC3854001	3854001	811639T	MÓDULO	MODULE	MODULO	MODULE	1
6	REC3854003		91-888863	MÓDULO DISTRIBUIDOR	MODULE: DISTRIBUTOR	MODULO: DISTRIBUZIONE	MODULE DISTRIBUTEUR	1
7	REC91-888863			HERRAMIENTA DISTRIBUIDOR	TOOL: TIMING	STRUMENTO: DISTRIBUZIONE	OUTIL POUR ALLUMEUR	1
8	REC294005	3857449	805222A1	CABLE: INTERRUPTOR	WIRE: SHIFT INTERUPTER	CAVO: INTERRUTTORE	FAISCEAU POUR SHIFT INTERRUPTEUR	1
9	REC84-817376T01			CABLE: DISTRIBUIDOR - BOBINA	WIRE LEAD: DISTIBUTOR - COIL	CAVI: DISTRIBUZIONE - BOBINA	FAISCEAU POUR BOBINE	1
10	REC500442			CABLE ALIMENTACIÓN BOBINA	WIRE LEAD: COIL HARNESS	CAVO: BOBINA	CÂBLE D'ALIMENTATION DE LA BOBINE	1
11	REC3854002	3854003	811637001	BOBINA ARRANQUE	COIL: IGNITION	BOBINA ACCENSIONE	BOBINE D'ALLUMAGE HEI	1
12	REC805222A1	3862014	8M6001253	DISTRIBUIDOR: DELCO V8 E.I. (3, 4 y 6 incluidos)	DISTRIBUTOR: DELCO V8 E.I. (3, 4 & 6 Included)	DISTRIBUZIONE: DELCO V8 E.I. (3, 4 e 6 compresi)	DISTRIBUTEUR: V8 DELCO E.I. (3, 4, et 6 inclus)	1

302 5.0L --> OMC 175 - 190 | MERCRUISER 888 - 215 - 225 | VOLVO AQ 190A
351 5.8L --> OMC 235 - 240 - 250 | MERCRUISER 233 - 255 | VOLVO AQ 240A

CULATA | **CYLINDER HEAD** | **TESTATA** | **BLOC MOTEUR**

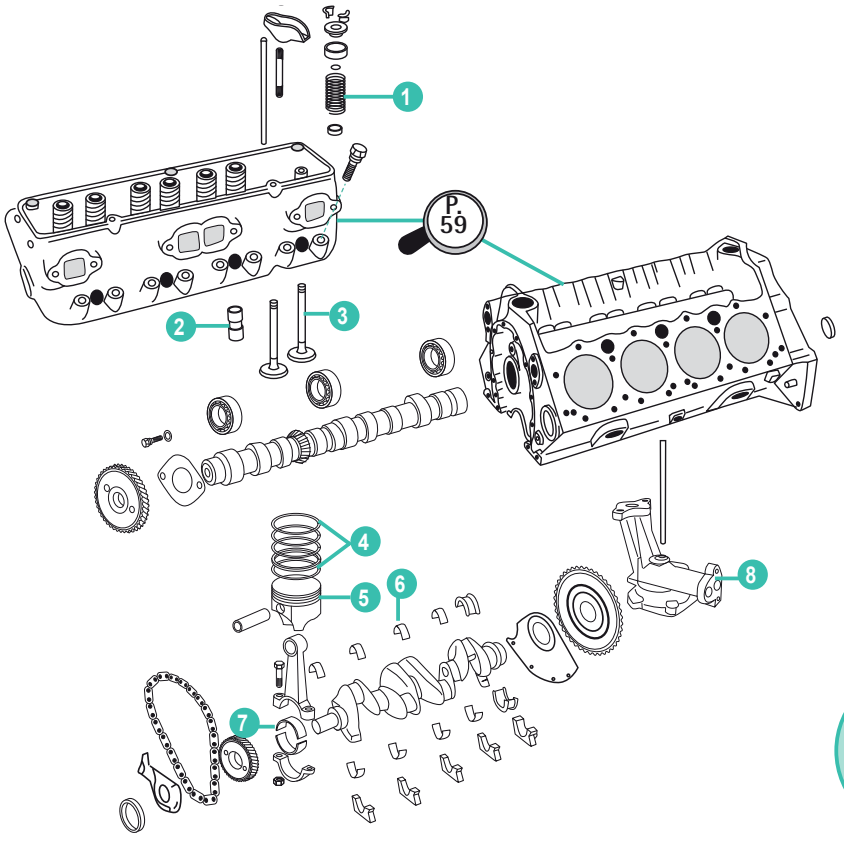

P. 17

	REF	VOLVO	MERCRUISER				
				MUELLE ESCAPE	EXHAUST SPRING	MOLLA SCARICO	RESSORT DE SOUPAPE
1	REC24-75619		24-75619	5.0	5.0	5.0	5.0
				5.8	5.8	5.8	5.8
				LIFTER	LIFTER	LIFTER	POUSSOIR HYDRAULIQUE
2	REC3853847	3853847		5.0, 5.8 y 460	5.0, 5.8 & 460	5.0, 5.8 e 460	5.0, 5.8 e 460
				5.0, 5.8 (1992-01)	5.0, 5.8 (1992-01)	5.0, 5.8 (1992-01)	5.0, 5.8 (1992-01)
				VALVULA DE ESCAPE	EXHAUST VALVE	VALVOLA SCARICO	SOUPAPE D'ECHAPPEMENT
3	REC3853731		56154	5.0	5.0	5.0	5.0
	REC3853731	3853731	56154	5.8	5.8	5.8	5.8
				AROS PISTÓN	PISTON RINGS	ANELLO PISTONE	SEGMENT
4	REC3853268	3853268	39-56114	5.0 y 5.8	5.0 & 5.8	5.0 & 5.8	5.0 & 5.8
	FEDE-251K030			030	030	030	030
	REC3853885	3853885		040 (1995-00)	040 (1995-00)	040 (1995-00)	040 (1995-00)
				PISTON	PISTON	PISTONE	PISTON
	FED517P			5.0 (1987+)	5.0 (1987+)	5.0 (1987+)	5.0 (1987+)
	REC3857022	3857022		5.0 A 030 (1987+)	5.0 030 (1987+)	5.0 030 (1987+)	5.0 030 (1987+)
5	REC3853898	3853898		5.0 (1977+) 5.8 (1977+)	5.0 (1977+) 5.8 (-1977)	5.0 (1977+) 5.8 (-1977)	5.0 (1977+) 5.8 (-1977)
	FED463P030			5.0 - 030 (1977+) 5.8 A 030 (1977+)	5.0 030 (1977+) 5.8 030 (-1977)	5.0 030 (1977+) 5.8 030 (-1977)	5.0 030 (1977+) 5.8 030 (-1977)
	REC3857023	3857023		5.0 - 040 (1995-00)	5.0 040 (1995-00)	5.0 040 (1995-00)	5.0 040 (1995-00)
				KIT COJINETES BANCADA	MAIN BEARING SET	KIT CUSCINETTO PRINCIPALE	KIT COUSSINET DE VILEBREQUIN
6	FED4125M			5.0	5.0	5.0	5.0
	FED5078M			5.8	5.8	5.8	5.8
	FED4125M010			5.0 - 010	5.0 - 010	5.0 - 010	5.0 - 010
				COJINETES BIELA	BEARING CONNECTING ROD	CUSCINETTO BIELLA	COUSSINET DE BIELLE
7	REC3852775	3852775	23-56116	5.0	5.0	5.0	5.0
	FED3380CPA		23-85744	5.8	5.8	5.8	5.8
				BOMBA ACEITE	OIL PUMP	POMPA OLIO	POMPE A HUILE
8	REC3853909	3853909	56174	5.0	5.0	5.0	5.0
	REC3850908	3853908	64787	5.8	5.8	5.8	5.8

KITS DE JUNTAS — GASKET KIT — KIT GUARNIZIONE — KITS DE JOINTS

5.0L			5.8L						
REF	VOLVO	MERCRUISER	REF	VOLVO	MERCRUISER				
FEL17060	3853732	27-75647	FEL17060	3853732	27-75647	JUNTA CULATA	HEAD GASKET	GUARNIZIONE TESTATA	JOINT DE CULASSE
FEL17260		27-64763A2	FEL17260		27-64763A2	KIT JUNTAS SUPERIOR	UPPER GASKET SET	KIT GUARNIZIONE SUPERIORE	KIT JOINTS SUPÉRIEUR
FEL17261			FEL17261			KIT JUNTAS CON TAPA VÁLVULAS ALUMINIO	GASKET SET ALUMINUM VALVE COVER	KIT GUARNIZIONE CON COPERCHIO VALVOLA ALLUMINIO	KIT JOINTS AVEC CACHE CULBUTEUR AL
FEL17161			FEL17166			KIT JUNTAS INFERIOR (1 Junta cárter, 1 retén trasero)	LOWER GASKET SET (1 oil pan gasket, 1 piece rear seal)	KIT GUARNIZIONE INFERIOR (1 guarn. coppa olio, 1 tenuta posteriore)	KIT JOINTS INFÉRIEUR (1 JOINT DE CARTER, 1 joint arrière)
FEL17160			FEL17165			KIT JUNTAS INFERIOR (4 Juntas cárter, retén trasero de 2 piezas)	Lower gasket set (4 oil pan gaskets, 2 pieces rear seal)	KIT GUARNIZIONE INFERIORE (4 guarn. coppa olio, 1 tenuta posteriore 2 pezzi)	KIT JOINTS INFÉRIEUR (4 joints carter, joint arrière 2 pièces)
FEL17360	3853912	27-73042	FEL17360	3853912	27-73042	KIT JUNTAS COLECTOR ADMISION	INTAKE MANIFOLD GASKET SET	KIT GUARNIZIONE COLLETTORE ASPIRAZIONE	KIT JOINTS COLLECTEUR D'ADMISSION
FEL17997	3852822		FEL17998	3852823		JUNTA CÁRTER (1pieza)	OIL PAN GASKET (1 piece)	GUARN. COPPA OLIO (1 pezzo)	JOINT DE CARTER (1 pièce)
FEL17995		27-64798	FEL17996		27-75483	JUNTA CÁRTER (4 piezas)	OIL PAN GASKET (4 pieces)	GUARN. COPPA OLIO (4 pezzi)	JOINT DE CARTER (4 pièces)
FEL17945		27-56173	FEL17945		27-56173	KIT JUNTAS TAPA VÁLVULAS	VALVE COVER GASKET SET	KIT GUARNIZIONE COPERCHIO VALVOLA	KIT JOINTS CACHE CULBUTEUR
FEL17946	3852818		FEL17946	3852818		KIT JUNTAS TAPA VÁLVULAS ALUMINIO	ALUMINUM VALVE COVER GASKET SET	KIT GUARNIZIONE COPERCHIO VALVOLA ALLUMINIO	KIT JOINTS CACHE CULBUTEUR AL
FEL17746		26-56869				RETÉN TRASERO CIGUEÑAL CONTRARROTACIÓN	CRANKSHAFT REAR SEAL OPPOSITE ROTATION	TENUTA POSTERIORE ALBERO MOTORE CONTROROTANTE	JOINT ARRIÈRE VILEBREQUIN CONTRE ROTATION

REF --> RO / OEM

REF	OEM	VOLVO	MERCRUISER	PAG.
B				
BA50-090-075	22-33198A1			45
BRA125-1/2X1/2				45
BRA125-1/2X3/4				45
BRA125-1/2X3/8				45
BRA125-1/4X1/2				45
BRA125-1/4X1/4				45
BRA125-1/4X3/8				45
BRA125-1X3/4				45
BRA125-3/16X1/4				45
BRA125-3/4X3/4				45
BRA125-3/8X1/2				45
BRA125-3/8X3/8				45
BRA125-5/16X3/8				45
BRA125-5/8X3/4				45
BRA125-5/8X3/8				45
C				
CRA902171				39
CRA902175				39
CRA904633				38
CRA921023				39
CRA935154				37
CRA944595				34
CRA946331				38
CRA952343				34
F				
FA90401				46
FA90412				46
FA90515				46
FA90519				46
FA90526				46
FED3380CPA			23-85744	89
FED4125M				89
FED4125M010				89
FED463P030				89
FED5078M				89
FED517P				89
FEDE-251K030				89
FEL17019			24-47453	64
FEL17049			27-811207	87
FEL17060		3853732	27-75647	90
FEL17119				65
FEL17124				82
FEL17145			27-811566	83
FEL17160				90
FEL17161				90
FEL17165				90
FEL17166				90
FEL17219				67
FEL17249				85
FEL17260			27-64763A2	90
FEL17261				90
FEL17319			27-46401	64
FEL17360		3853912	27-73042	90
FEL17725		3856926	26-15123	77
FEL17725			26-35313	77
FEL17740			26-75980	85
FEL17746			26-56869	90
FEL17925			27-49936	64
FEL17926			27-34209	67
FEL17945			27-56173	90
FEL17946		3852818		90
FEL17975			27-49949	65
FEL17983		841240	27-85917A1	82
FEL17995			27-64798	90
FEL17996			27-75483	90
FEL17997		3852822		90
FEL17998		3852823		90
FELBS40013				77
FIRGM262LA				61
FIRGM262LGT				61
FIRGM262LIT				61
FIRGM262LJT				62
FIRGM305LCT				62
FIRGM305RB				62
FIRGM305RC				62
FIRGM350RBF				63
FIRGM454RB				63
FIRH6009				61
FIRH6010				61
FIRH6011				61
FIRH6023				63
FIRH6036				63
FIRH6064				60
FIRH6065				60

REF	OEM	VOLVO	MERCRUISER	PAG.
G				
GE15210				14
GE21204				14
GE22001				13
GE22207				15
GE22254				15
GEGC15				14
GS11150				48
GS11151				49
GS11152				49
GS11153				49
GS11154				49
GS11155				49
GS11156				49
GS11157				49
GS11158				49
GS11159				49
GS20080				32
GS20081				32
GS20082				32
GS20084				33
GS20085				33
GS20151				33
GS20198				35
GS20199				35
GS30350				35
GS30351				35
GS30352				35
GS30353				35
GS31065				45
GS31066				45
GS31067				45
GS31155				45
GS31156				45
GS31157				45
GS31166				45
GS31245				45
GS35033				46
GS35034				46
GS35035				46
GS35036				46
GS35037				46
GS35038				46
GS35039				46
GS35040				46
GS35041				46
GS35042				46
GS35043				46
GS35044				46
GS35045				46
GS35046				46
GS35047				46
GS90001				12
GS90002				11
GS90003				11
GS90004				11
GS90005				11
GS90006				11
GS90007				11
GS90008				12
GS90009				12
GS90010				12
GS90011				12
GS90012				12
GS90013				12
GS90015				11
GS90019				11
GS90026				11
GS90029				11
GS90030				11
GS90031				11
GS90034				11
GS90037				11
GS90039				11
GS90040				11
GS90090				13
GS90092				13
GS90095				35
L				
LUB10212				30
LUB11363				29
LUB11400				29
LUB11402				29
LUB11552U12				25
LUB11957				33
LUB55011				30

REF	OEM	VOLVO	MERCRUISER	PAG.
M				
MP0003-027		3854766	10-8M0000482	87
MP0003-029		3854767	10-8M0000483	87
MP0003-141				85
MP0007-004				77
MP0007-027		3856122	10-11966	73-79
MP0007-028		3856123	10-11967/1	73-79
MP0007-029		3856124	10-11968	73-79
MP0007-122		3853004	11-34516	73-79
MP0007-256		3853197	809908 1	69-82
MP0007-378		3853229	48348	73-79
MP0009-002N5		3860214	860209A1	69
MP0009-004LC		3854023	852946001	77
MP0009-004LC		3857474	809892T	71
MP0009-036		21179974	614-811839T02	71
MP0009-107		3856135	10-17344	73-79
MP0009-194LC		3854948	827150	73
MP0009-194LC		3854949	827149	73
MP0009-208		3853209	22-72640	71-76
MP0011-045		3853195	75435A1	71-77
MP001204		940186	10-806681	79
MP001204		3856765	10-835004	73
MP0014-100		3853784	851036T	64
MP0014-401		3853138	814702	67
MP0014-403		3853955	10-34470	67
MP0025-004		3852662	55045T	67
MP0053-004F8		976644	811555	85
MP0053-060			845610T	85
MP0053-084				85
MP0053-255F8		3855035	827643	83
MP0303-001		856264	861942T9	83
MP0307-002		856248	12117A5	69
MP0307-002			805384T	82
MP0314-002				65
MP370039		3855990	845668T	83
MP371663			861942T3	82
MP373201				82
MP425024		3855805	824324T	73
MP425036		3855806	824330T1	73
MP425113		3854100	811575T	87
MP425149			72608	87
MP426422		3854346		74
MP429415				74
MP429905				74
MP514516		855283		71-77
MP514693		835407	807730	71
MP514693		835407		77
MP514720				85
MP804007			835005	77
MPI305-0380		3854956	26-34217	65-69-82-83
MPI307-0380		3857898	24-35214	65-69-82-83
MPI309-0380				69-82-83
N				
NGKBPR6EFS		3851857	816336Q	52-53-54-55-56-57
NGKBR6FS		3851861	33-59571B	54-55
P				
PER12063				19
PER12073				19
PER17762				18
PER35124				17
PER35134				17
PER35144				17
PER35375				18
PER35395				18
PER35572				19
PER35580				19
PER35611				18
PER35621				18
PER54283				17
PER54291				17
PER54292				17
PS111028				10
PS111035				10
PS111044				10
PS111047				10
PS111091				10
PS114699				10
PS114700				10
PS114701				10
PS114704				10
PS114709				10
PS4688				11
PS4706				11
PS4707				11

REF	OEM	VOLVO	MERCRUISER	PAG.
R				
RAC1/2X20				45
REC004				36
REC095009			220-801873	67
REC10001			733-803850T	67
REC10004		3854219	735-850097	71-77
REC10005		3854221	735-850098	71
REC10005		3854221	735-9715T1	77
REC10006		21179952	735-835001T	71
REC10006		21179952	735-850097	77
REC10009		826465	735-6370	77
REC10010			735-6371	77
REC10011		856589	737-879194035	85
REC10012		856590	737-6615T 1	85
REC10013			735-850098	71-77
REC10015				77
REC10018				71-77
REC10352		3853158	35329	73-79
REC10501		3857900	10-34510	64
REC10W30205L				22
REC10W3020L				22
REC10W3050L				22
REC10W30U3				22
REC10W30U6				22
REC10W40205L				22
REC10W4020L				22
REC10W4050L				22
REC10W40U3				22
REC10W40U6				22
REC11001		3853960	39-17464	67-71-76
REC11002			39-67132	67
REC11003			39-67134	67
REC11004		21179959	39-801861/1	71-76
REC11005		857240	39-801861	76
REC11005		3853960	39-17464	71
REC11006		3853961	39-17465	71-76
REC11008			39-66217	67
REC11009			39-75609	76
REC11010		826470	39-75981	76
REC11011				71-76
REC11012		856591	39-67127	84
REC11013		856592	39-68128	84
REC11014			39-827651T	84
REC11015			29-850447	84
REC11016			39-17465	71-76
REC11018			39-67128	84
REC11019			39-67127	84
REC11020				76
REC11021				67
REC11-13436	11-82670911			45
REC11-34933	11-34933			45
REC11502		3854765	24-14754T	87
REC11-52707Q1	11-52707Q1			45
REC1161995	1161995			28
REC11-8267089	11-35888			45
REC11-862903	11-82671013			45
REC12				8
REC12000		3853157	99948	73-79
REC12001		3857899	34532	64
REC12002		3853170	17739	73
REC12005		3853483	848263	87
REC12006		3853483	848263	87
REC12010			848262	87
REC12502			11985	71
REC12504		856620	43-86481 + 86482 + 75588	85
REC13001		3853149	23-85701	67-77
REC13002		3856117	23-85704	67-77
REC13003			23-85677	67
REC13004			23-85680	67
REC13005		3852829	23-43293T	67
REC13006		3856731	23-818469001	67
REC13007			23-818471	67
REC13008			23-85675	67
REC13009			23-85713	67
REC13010		21179992	23-11992001	71
REC13011			23-811858001	71
REC13012		3853215	23-818465	71
REC13012			23-85698	77
REC13013		856342	23-818467	71-77
REC13014		3856162	23-85674	71-76
REC13015		3862360	23-818465	77
REC13016			23-818467	77
REC13017			23-85684	84
REC13018			23-85691	85
REC13019			23-85726001	85
REC13020			23-818473	85

REF	OEM	VOLVO	MERCRUISER	PAG.
REC13021			23-818476	85
REC13024		3853153	23-85705	67-77
REC13025			23-818468	77
REC13026			23-818472	67
REC13501		3853127	52367	64
REC13502		856368	85803	64-73
REC13502		856368	87284	79
REC13503			62421	64
REC13504		3857879	97661	64
REC13505		3855808	824317 1	73-79
REC13506		841873	97661	73
REC13507		3855810	809992	73-79
REC13508				79
REC13509				79
REC13510		841873		79
REC13513		856566	818962	87
REC13514		3853139	34519	64
REC14000		3853954	72638	64-73-87
REC14001		856397	17340T	73
REC14001		3855811	811844T	73
REC14001		3856127	72638	79
REC14002		3853954	17340T	79
REC14003		3854099	811584	87
REC14100		3853843	36405	65
REC14101		3853851	17617	69
REC14101		3853851	809907002	82
REC14102		3855035	808693A1	83
REC14200		841212	79961T	79
REC14201		841212	79961T	79
REC14202		3856928	809996	79
REC14203		3856928	809995	79
REC14204			17671	87
REC15				8
REC15251		3853194	14249A2	71-77
REC15252		3855735	809893	71
REC15253		3859023	8M0069799	71
REC15254		3862263	863396	77
REC15255		856605	66215	85
REC15351		856386	14244T	69
REC15352		3857674	87758A1	82
REC15353		3850822	13840A1	82
REC15-405		3888324	84-816761Q14	68
REC157-N		3853143		67-71-77-85
REC15W40205L				22
REC15W4020L				22
REC15W4050L				22
REC15W40U3				2
REC16				8
REC1685		3853143		67-71-77-85
REC17				8
REC17000				57
REC17000				64
REC17010		3854299	27-879150140	57-73
REC17020		3853380	27-75611	57-79
REC17030		3853380	27-75611	57-79
REC17040		856575	27-8M0049045	87
REC17042		3853511	27-879150141	87
REC17042			27-879150139	87
REC17046				87
REC17048		3853587	24-811546	87
REC17048			27-811546	87
REC17100				65
REC17102		3853343	27-810846	65
REC17110				69
REC17116				69
REC17120				82
REC17125				82
REC17140			27-52550	83
REC17146			27-845628	83
REC17200				67
REC17207				85
REC17210		857177	27-11977	71-73
REC17211				71
REC17214				77
REC17220				77
REC17224				77
REC17230				77
REC17232				77
REC17240				85
REC17241				85
REC17242				85
REC17242				85
REC17243				85
REC17246				85
REC17248				85
REC17320				54-55-79
REC17340				57-87

REF	OEM	VOLVO	MERCRUISER	PAG.
REC17341			27-805722A1	87
REC17342		3854095	27-8M0050225	87
REC17342			27-805403A1	87
REC17900				64
REC17903				67
REC17920		3854300	27-11988	73
REC17921		3854942	27-827154	73
REC17930		835096	27-52202	79
REC17931		3852687	27-17467	79
REC17935		856626	27-49121	87
REC17937		3853513	27-811588	87
REC17950				65
REC17970		855729	27-42797	69
REC17971		3852655	27-883964T	69
REC17980		855729	27-52236	82
REC17981		855729	27-52236	82
REC17982		3856138	27-13865 1	82
REC17985		856889	27-52550	83
REC17986		3853510	27-845628	83
REC18				8
REC18-8114				74-80
REC18-8115				74-80
REC19				8
REC20				8
REC21124849				71
REC21124852	21124852			69
REC21180065		21180065		71
REC21363429	21363429			21
REC21363430	21363430			21
REC22-00842				45
REC22-00845				45
REC22-00874				45
REC22-05154				45
REC22-328022	22-32802			45
REC22-32803	M22-32803			45
REC22-36382	22-36382			45
REC22479638	22479638			23
REC22479642	22479642			23
REC22479648	22479648			24
REC22479650	22479650			24
REC22574246	22574246			25
REC24-75619			24-75619	89
REC25000				74-80
REC25W40205L				23
REC25W40U3				23
REC25W40U6				23
REC26-14240		3852657	26-14240	67-77
REC26-14240		3852657	26-8M0077606	71
REC26-14756		856580	26-14756	85
REC26-34217		3854956	26-34217	64-73-79
REC26-75988		3853521	26-75988	87
REC26-811554			26-811554	85
REC26-8219471			26-8219471	85
REC27-14241		3852656	27-14241	71-77
REC27-14241		3852656	27-881715	67
REC27-142471			27-142471	69
REC27-14250		3852654	27-14250	71-77
REC27-33395				54-55-56-78
REC27-344861		3852109	27-344861	75-81
REC27-46820				57-86
REC27-49953		3852691	27-49953	67
REC27-49955		3851981	27-49955	65-69-82
REC27-52546	27-52546			64
REC27-53354				64
REC27-54529		856608	27-54529	85
REC27-807473A1		3857662	27-807473A1	54-55-56-79
REC27-8146801				52
REC27-815528				52-64
REC27-850456			27-850456	85
REC27-87707		3852660	27-87707	68
REC27-96429				64
REC27-99757				53-72
REC294005		3857449	805222A1	88
REC294005			807964A1	68
REC294005				75-81
REC2TU3				20
REC2TU6				20
REC3809445	3809445			26
REC38201		21114522		71-76
REC3850908		3853908	64787	89
REC3852775		3852775	23-56116	89
REC3853268		3853268	39-56114	89
REC3853341		3853341	26-97335	67-71-77
REC3853731		3853731	56154	89
REC3853847		3853847		89
REC3853885		3853885		89
REC3853898		3853898		89
REC3853909		3853909	56174	89

REF	OEM	VOLVO	MERCRUISER	PAG.
REC3854001		3854001	811639T	68-75-81-88
REC3854002		3854002	811637001	75
REC3854002		3854002	898253T27	68-81
REC3854002		3854003	811637001	88
REC3854003		3854003	811637001	68-81
REC3854003		3854003	91-888863	75-88
REC3854260		3854260	811635T3	68
REC3854261		3854261	8M6001254	68
REC3854311		3854311	8M0062084	75
REC3854331		3854331	850484T2	75
REC3854548		3854548	808483T3	81-88
REC3854549		3854084		88
REC3854549		3862014	8M6001253	81
REC3857022		3857022		89
REC3857023		3857023		89
REC3861911				56-57-61-62
REC3901775				42
REC3902247				44
REC3902250				44
REC3902358				44
REC3902407				44
REC3902413				44
REC3902417				44
REC3902467				44
REC3902659				43
REC3902864				44
REC3902865				44
REC3902907				44
REC3902931				44
REC3903008				44
REC3903502				44
REC3903560				44
REC3904048				44
REC3904277				43
REC3905015				43
REC3905159				43
REC3905265				44
REC3905286				43
REC3905397				43
REC3906015				44
REC3906219				43
REC3906891				43
REC3907103				44
REC3907642				44
REC3908405				44
REC3909234				44
REC3910120				44
REC3910127				43
REC41400				46
REC425062		3856270	807289A1	54-79
REC46-8M0113733				52
REC46-8M0113734				54-55-56
REC46-8M0113735				57
REC4804		3853840	17345	79
REC500442				68-75-81-88
REC5119766				36
REC5119902				36
REC5119903				36
REC55005				31
REC55006				31
REC55006				31
REC55133GF				31-32
REC55133M				31-32
REC55133S				31-32
REC55134				38
REC551455			861942 17	69
REC551455			861942T2	82
REC5515100				35
REC59341A1		3853135	59341A1	67
REC5W40205L				21
REC5W40U3				21
REC5W40U6				21
REC6507				79
REC6532		3854008	36-18710002	73-79
REC70720				34
REC70817B		3853226	26-97664	73-79
REC75W140U3				25
REC75W90205L				24
REC75W9020L				24
REC75W90U3				24
REC75W90U6				24
REC802555			802555	79
REC805222A1		3857449	805222A1	81
REC805222A1		3862014	8M6001253	88
REC805298A1		3854026	805016A1	74-80
REC807757T		3860201	807757T	71-77-85
REC807964A1			807964A1	75
REC809910			8809910	82

REF	OEM	VOLVO	MERCRUISER	PAG.
REC80W9020L				25
REC80W90U3				25
REC80W90U6				25
REC817377			817377	68
REC824326002		3855807	27-824326002	53-73
REC82745	MC22-87238			45
REC82745	OMC379957			45
REC84-817376T01		3854084	84-817376T01	68-75-81-88
REC85122800	85122800			26
REC859021		3856133	10-35366	71
REC862210A01	MC862210A01			45
REC864297T01				71
REC879194401				53
REC888776T		3859022	888776T	71
REC8M0068784		3857532	8M0068784	46-67
REC8M0082988			8M0082988	67
REC8M6500024		865598	8M6500024	71-77
REC90095				36
REC91-00001				36
REC91-00002				36
REC91-00003				34
REC912127		3853503	10-65746	64
REC912127			16-11995	87
REC91-37241				36
REC91-859046Q3	91-859046Q3			37
REC91-859046Q4	91-821887T1			37
REC91-888863		885163	91-888863	68-75-81-88
REC936-810849		3854012	938-8M0115135	57-64
REC938-7499				58-62-63
REC938-803860T				58-63
REC938-8M0087884				58-62
REC97258A1				46
RECAGA00M1				42
RECATFU3				27
RECATFU6				27
RECAXONENEMO				42
RECAXONEVOICE				42
RECBS40013		841240	26-814622	77
RECD06591				42
RECD127X0				42
RECED36				7
RECED36C				7
RECGM181				52
RECGM262VORTEC				53-62
RECGM305VORTEC				54-62
RECGM350				54-56-62
RECGM350MPI				56
RECGM350PREVORTEC				55-63
RECGM350VORTEC				55-63
RECGM454				57-63
RECGM6.2MPI				56
RECGREU1				29
RECGREU12				29
RECH10				8
RECH10-1/4				8
RECHANDLEJO6HD				9
RECISO46U3				27
RECISO46U6				27
RECJO10				9
RECJO6HD				9
RECKFW				8-9
RECKOCYL				9
RECKRW				9
RECMJ10PS				7
RECNSCYL				8
RECPIN4				38
RECPIN4.5				38
RECPIN6				38
RECPNRS-1100		940100	10-55715	82
RECPNRS-1100		940135	14070	69
RECPNRS-1101				83
RECSPRINGJO6HD				9
RECSR9				10
RECSR9WHEEL				10
RECT11957				33
RECT11958				33
RECT30190				31
RECT30201				30
RECTOOL1				10
RECTOOLTRIM1				38
RECTOOLTRIM2				38
RECTOOLTRIM3				38
RECTOOLTRIMKIT				38
RECTW6502		3854945	14252	73
RECTW6502T		3854945	14251	73
RECTW9760		835415	8M0071559	73-79
RECWS3				9
RECZ06590PC				42

REF	OEM	VOLVO	MERCRUISER	PAG.
RM23-804982		3858954	23-804982	67
RM24-483471		21605360	24-48347 1	79
RM24-801879			24-801879T	87
RM24-850465T		3853543		87
RM26-879194364		3858698	26-879194364	71
RM39-802559		3857670	39-802559	76
RM59340		3853198	59340	64-73-79
RM733-810852		3853340	733-810852	67
RM735-802557T		3857667	735-802557T	77
RM804912T01		21124851	804912T01	69
RM809907002		3856125	809907002	69
RM809980T1		21124851	809980T1	69
RM810845		3854015	810845T	65
RM811583			811583	87
RM816962		3853350	816962	87
RM85108974	85108974			28
RM883494		3859021	883494	71
RM91-37299Q2				30
RM92-858021QB1U6	92-858021QB1			28
RM92-858022QB1U3	92-858022QB1			28
RM92-858023QB1U2	92-858023QB1			28
RM92-858026QB1U6	92-858026QB1			20
RM92-858027QB1U3	92-858027QB1			20
RM92-858037QB1U3	92-85803TQB1			20
RM92-858064QB1U6	92-858064QB1			26
RM92-858065QB1U2	92-858065QB1			26
RM92-858074QB1U12				29
RM92-858084QE1U3	92-8M0096256			24
RM92-8M0086220U6	92-8M0086220			21
RM92-8M0086221U3	92-8M0086221			21
RM92-8M0086223U6	92-8M0086224			23
RM92-8M0086224U3	92-8M0086224			23
RM92-8M0086226U6	92-8M0086227			23
RM92-8M0086227U3	92-8M0086227			23
RM92-8M0096256U6	92-8M0096256			24
RM92-8M0096794U3	92-8M0096794			22
RM92-8M0121960U12	90-8M0121960			27
RM92-8M0133985U4				29
RM92-8M0133989U6				29
S				
SED4610100				12
SED4610101				12
SED4610102				12
SED4612902				12
SED4612903				12
SED4613002				12
SED4613003				12
SED4613102				12
SED4613103				12
SED4613125				12
SED4613402				12
SED4613403				12
SED4617101				12
SED4617201				12
SH3010-000				33
SH8050-305-426				32
SSP4206				37
SSP4207				37
SSP4213				37
SSP4600				33
SSPHBP100K				34
STA92600				13
STA93008				14
STA93016				14
STA93116				15
STA93664				15
STA93900				15
STA93922				15
STA93932				15
STA94100				15
T				
TCMVRM5				41
TEC145				41
TEC218				40
TEC384				40
TEC786				40
TECDT8580				40
TRE1206MG				16
TRE1206MP				16
TRE1206MQ				16
TRE1212MG				16
TRE1245E				16
TRI202V-4004				48
TRI202V-5004				48
TRI202V-6004				48
TRI202V-8004				48
TRI252V0340-36				48
TRI252V1000-36				48
TRI252V1120-36				48
TRI252V1140-36				48
TRI252V1340-36				48
TRI260-4001				47
TRI260-4121				47
TRI260-5001				47
TRI260-6001				47
TRI270V-4000				47
TRI270V-4500				47
TRI270V-5000				47
TRI270V-6000				47
TRI290V-3000				47
TRI290V-4000				47
TRI290V-4500				47
TRI290V-5000				47
TRI290V-6000				47
TRI292V2000				47
TRI292V2120				47
Y				
YARCHA				10
YARES2				10
YARFHA				10

GUÍA IDENTIFICACIÓN DE MODELOS 102
GUÍA MANTENIMIENTO DE MOTORES 104
GUÍA MANTENIMIENTO TRANSMISIONES 108
KITS MANTENIMIENTO COLAS 108
MATERIALES GENÉRICOS PARA REVISIÓN 109

SISTEMA ALIMENTACIÓN Y FILTRACIÓN 110

GASOLINA
FILTRO DE ACEITE 114
PARA DIRECCIÓN HIDRÁULICA AXIUS 114
GUÍA 115
FILTRO DE AIRE 113
FILTRO DE COMBUSTIBLE Y ELEMENTOS 110
BRACKET 110
FILTRO DECANTADOR, VASO TRASPARENTE 111
FILTRO EN LÍNEA 112
FILTRO PARA CARBURADOR 113
FILTRO SEPARADOR AGUA 110
FILTRO VST 113
RACOR DE LATÓN 112

DIESEL
FILTRO DE ACEITE 121
GUÍA 122
FILTRO DE AIRE 120
FILTRO DE COMBUSTIBLE Y ELEMENTOS 116
FILTRO CON CAZOLETA 117
FILTRO DECANTADOR 118
FILTRO TIPO SEPAR2000 120
FILTRO TRANSMISION HURT 121

ACCESORIOS PARA FILTROS 123
BOMBA DE COMBUSTIBLE 124
BOMBA DE ALTA PRESIÓN 126
BOMBA DE BAJA PRESIÓN 127
BOMBA MECÁNICA 124
BOMBA Y ENFRIADOR 129
GUÍA BOMBAS MECÁNICAS 125
JUNTAS 125
JUNTAS VST 129
MÓDULO DE COMBUSTIBLE COMPLETO 128
REGULADORES PRESIÓN COMBUSTIBLE 129
CARBURADOR 132
APAGALLAMAS 142
BOYAS 136
CARBURADOR NUEVO 133
CARBURADOR REMANUFACTURADO 132
CHOKE 142
GUÍA 140
GUÍA KITS 139
JUNTAS 137
KIT ADAPTADORES 135
KIT AGUJA 136
TORNILLOS 136
TUBO COMBUSTIBLE, BOMBA --> CARBURADOR 135
INYECTORES 130
KIT RETENES INYECTOR 131
RACORES 122
TURBO 143
ABRAZADERA ESCAPE 143
KIT JUNTAS 143
RETÉN ACEITE 143

SISTEMA ELÉCTRICO 144

ALTERNADORES Y REGULADORES 153
KIT SUSTITUCIÓN ALTERNADOR 155
REGULADOR ALTERNADOR 155
MOTORES DE ARRANQUE 151
SENSORES 144
ÁRBOL DE LEVAS 146
CAUDAL DEL AGUA 148
GUÍA SENSORES 149
IAC 145
MAT/MAP 144
OXÍGENO 145
PICADO 145
PICK UP 145
POSICIÓN CIGÜEÑAL 146
PRESIÓN DE ACEITE 147
TEMPERATURA DEL AGUA 148
TEMPERATURA DE AIRE 148
TEMPERATURA ENFRIADOR 148
TEMPERATURA Y PRESIÓN ACEITE CON ALARMA 147
TPS 144
TRIM 146
VÁLVULA DE AIRE 145
SOLENOIDE, RELÉ Y FUSIBLES 157
ALARMA 160
EXTENSOR DE SOLENOIDE PARA TERMINALES 157
FUSIBLE ATM, ATC, MAXI 159
FUSIBLE MOTOR 158
FUSIBLE TERMINAL DE BATERÍA 159
FUSIBLE TRIM 158
INTERRUPTORES DE PARO 160
INTERRUPTORES TRIM 160
MERCATHODE 159
SOLENOIDES 157
SOLENOIDES ARRANQUE 157
SOLENOIDES DELCO REMY 157
SOLENOIDES TRIM 157
RELÉ 158
RELÉ DE ARRANQUE Y BOMBA GASOLINA 158
RELÉ PARA ACELERADOR Y EJE 158
RELÉ PARA ALARMA Y VARIOS 158
TRIM 155
CONVERTIDOR DE 3 A 2 CABLES 156
DEPÓSITO 156
SOPORTE 156
TRIM COMPLETO 155

SISTEMA ENCENDIDO 161

BOBINA ENCENDIDO 161
ENCENDIO ELECTRÓNICO 161
BUJÍAS 163
CABLES ALTO RENDIMIENTO 167
DISTRIBUIDOR 168
CONDENSADORES 170
DESPIECES 173
• DELCO VOYAGER 173
• MPI V6 & V8 175
• THUNDERBOLT IV & V 174
DISTRIBUIDOR 175
DISTRIBUIDOR ELECTRÓNICO 176
GUÍA KITS DE CONVERSIÓN ELECTRÓNICO 172
GUÍA KITS DE ENCENDIDO 171
KITS DE CONVERSIÓN ELECTRÓNICO 172
KITS DE ENCENDIDO 170
PLATINOS 170
ROTORES 169
TAPA 168
TRIGGERS 169
MÓDULOS IGNICIÓN 162

SISTEMA DE REFRIGERACIÓN 177

BOMBA DE AGUA 185
BOMBAS DE BRONCE 186
JUNTAS 187
CORREAS 194
GUÍA CORREAS MOTOR 198
GUÍA CORREAS SERPENTÍN 197
GUÍA DIESEL 195
GUÍA GAS 195
ENFRIADOR DE ACEITE 184
KITS BOTELLAS DE ACEITE 185
KITS ENFRIADOR 184
GUÍA DE IMPULSORES 188
INTERCAMBIADOR DE CALOR 183
KITS 183
KIT DE REPARACIÓN 189
1 | R | MR | ALPHA ONE 189
ALPHA ONE GEN II 190
BRAVO I, II & III 191
DESPIECE 192
POLEA BOMBA 193
TENSOR CORREA V6 & V8 194
MANGUITOS MOTOR 198
BOMBA AGUA 199
BOMBA AGUA --> ENFRIADOR DE ACEITE 199
CUERPO TERMOSTATO --> COLECTOR ESCAPE 200
CULATA --> COLECTOR ESCAPE 198
ENFRIADOR --> CUERPO TERMOSTATO 199
ENFRIADOR DE ACEITE 199
GUÍA MANGUITOS 202
GUÍA MANGUITOS DE COLA 201
GUÍA MANGUITOS EJE --> GASOLINA 203
TOMA AGUA 198
TRANSOM --> ENFRIADOR 199
TERMOSTATO 177
CASQUILLO 178
CONECTOR RÁPIDO 179
CUBIERTA 180
CUERPOS 177
EJE VÁLVULA 179
JUNTAS 180
KIT CUERPO DE TERMOSTATO 177
KITS TERMOSTATOS 181
MÓDULO DISTRIBUCIÓN 179
TERMOSTATOS DIESEL 181
VÁLVULA T 179

PARTES DEL MOTOR 204

JUNTAS DISTRIBUCIÓN 215
JUNTAS TAPA 215
JUNTAS PARA BASES GM Y FORD 204
RETENES 215
GUÍA RETENS ACEITE 216
GUÍA RETENES CIGÜEÑAL 216
GUÍA TÓRICAS 215
JUNTAS MOTOR 4CYL LINEA 217
RETENES CIGÜEÑAL 216
RETENES VÁLVULAS 216
VÁLVULA ADMISIÓN 216

SISTEMA ESCAPE Y ADMISIÓN 218

120 HP GM 153 218
CODO ESCAPE 218
COLECTOR ESCAPE 218
JUNTA CODO ESCAPE 218
JUNTA COLECTOR 218
JUNTA TAPA COLECTOR 218
TAPA COLECTOR 218
DESPIECES COLECTORES Y CODOS 219
140HP GM181 219
2.5L GM 153 4 cyl, 3.0L 4 cyl (1983-89) 220
3.0L/LX GM 181 222
3.0L MPI 223
165, 170, 180, 190, 470, 485, 488 3.7L/LX MCM 224 CID 224
GM 160, 165, 200CID, 250, 292CID 225
175, 185, 205, 262 MAG, 4.3L/LX/LH/LXH/EFI/MPI, GM 262 CID V6 226
4.3L CARB MPI ALPHA/BRAV 228
262 MAG (TBI), 4.3L/LH/LX/EFI (GEN+), GM 262 V6 (1996-01) 230
V6 231
305, 350, 377, 383, 385, (6.2L) MAG MPI HORIZON ALPHA/BRAVO 232
V8 SMALL BLOCK 234
198MIE, 228/MIE & 898, GM305CID, V8 250, 255MIE & 260 235
200, 228, 230, 230 MIE, 5.0L/LX, 898, 5.0L MPI, GM305 CID, 260/MIE, 320 EFI, 350 MAG, GM350 CID, 5.7L/LX, 6.2L MPI V8 (1983 + 2003) 236
330, 340MIE, 370TRS, 454EFI, 454MAG, 7.4MIE/L/LX, GM454 CID V8 502 EFI/MAG, 8.2L, GM502 CID V8 238
325-325MIE, GM427 CID V8 330/MIE 370TRS - 400TRS - 440TRS - GM454 CID 390 - 390MIE - 460TRS, GM472 CID V8 225/MIE - 250/MIE - GM327CID - 228/MIE GM305CID - 250 - 270 - 270MIE - 280TRS - GM350 CID V8 240
215, 225/MIE, 888 Ford 302 V8 233, 233MIE, 255/MIE, Ford 351 V8 241
CODOS 245
CODO ESCAPE INOX 247
EXTENSORES ESCAPE 249
KIT RISER 3" 248
KIT RISER 6" 249
TAPONES 249
COLECTORES 242
COLECTOR ADMISIÓN 254
TAPAS Y JUNTAS 250
FUELLES ESCAPE 253
JUNTAS COLECTOR-CODO 251
JUNTAS COLECTOR-CULATA 252
JUNTAS TAPA INTERCAMBIADOR 251
JUNTAS TAPAS LATERALES 250
PALOMILLA ESCAPE 253
TAPA COLECTOR 250

MERCRUISER CUMMINS

UNIDADES DE TRANSMISIÓN 255

ALPHA ONE GEN II 257
BRAVO 255
MC1 | R | MR | ALPHA ONE 256
R | MR | ALPHA ONE 256
ACOPLAMIENTOS MOTOR 305
ÁNODOS 284
- ÁNODO CANADA METAL 288
- ÁNODO RECMAR 284
- ÁNODO TECNOSEAL 286

CAMBIO 300
- ACOPLE 302
- ACTUADOR CAMBIO ELÉCTRÓNICO 302
- CABLE 300
- CABLE, KIT 300
- CABLES DIRECCIÓN PRETEC 301
- EJE CABLE CAMBIO 302
- GUÍA CABLE 303
- KITS CAMBIO 302
- KIT RETÉN 303
- TORNILLO Y PASADOR 302

COMPONENTES TRANSOM 299
- ABRAZADERA FUELLE CAMBIO 300
- CLIP FUELLE 300
- FUELLE ESCAPE 300
- KIT FUELLE 299
- KIT FUELLE CAMBIO 299
- KIT JUNTAS 299

DESPIECE COLAS 258
- R | MR | ALPHA ONE 258
- MC1 | R 260
- MR | ALPHA ONE 264
- ALHPA ONE GEN II 268
- BRAVO 276
- BRAVO I 278
- BRAVO II 280
- BRAVO III 282

HERRAMIENTAS 310
- ADAPTADOR EMBASES ACEITE 314
- CENTRADOR DE MOTOR 312
- EXTRACTOR 313
- EXTRACTOR DE COJIENTES Y HÉLICES 310
- EXPANSOR DE FUELLES 312
- EXTRACTOR DE PIÑONES 310
- EXTRACTOR POLEA BOMBA DE DIRECCIÓN 311
- EXTRACTOR TAPONES TRIM 312
- HERRAMIENTAS PARA COLAS 311
- LLAVE ESTRIADO EJE 312
- LLAVE GALGADO PIÑONES 312
- LLAVE PARA ELEMENTOS DEL CAMBIO 313
- LLAVE TORNILLO LATERAL TRANSOM 312
- LLAVE TUERCA CARDAN 314
- LLAVE TUERCA DIÁBOLO 311
- LLAVE TUERCA EJE VERTICAL 311
- PISTOLA DE ACEITE 314
- ÚTIL INSTALACIÓN ANILLO DE FUELLE 312
- VACUOMETRO DOBLE FUNCIÓN 314

POWER TRIM 305
- 120-140-165-228-250-260-470-485-888-898 305
- R/MR/ALPHA ONE 306
- ALPHA ONE GEN II 307
- BRAVO 308
- LATIGUILLOS POWER TRIM 309

SILENBLOCK 304
SOPORTE MOTOR 303
TRANSOM 290
- ALPHA ONE GEN I & II 290
- BRAVO 296
- CAMPANA BRAVO 296
- CAMPANA, CABLE CAMBIO Y BOMBA DIRECCIÓN 292
- CAMPANA MC, MR1, ALPHA ONE, GEN II 294
- SOPORTE ALPHA ONE GEN II 293
- SOPORTE TRANSOM BRAVO I, II, & III 298
- TRANSOM COMPLETO 291

SISTEMA DE PROPULSIÓN 315

HÉLICES AL E INOX DE 3 Y 4 PALAS 315
- GUÍA HÉLICES CON NÚCLEO INTEGRADO 316
- HÉLICES PARA BRAVO III 317
- HÉLICES PARA ALPHA ONE & BRAVO I 317
- TABLA DE APLICACIÓN SOLAS 318

REF --> RO 319
RO --> REF 330

EN

DRIVES MAINTENANCE KIT 108
GENERIC MATERIALS FOR REVISION 109
GUIDE: ENGINE MAINTENANCE 104
GUIDE: IDENTIFICATION MODEL 102
GUIDE: MAINTENANCE TRASMISSIONS 108

FUEL & FILTRATION SYSTEM 110

GAS ENGINE
AIR FILTER 113
FUEL FILTERS AND ELEMENTS 110
- BRACKET 110
- BRASS RACCORS 112
- CARBURETOR FUEL FILTER 113
- COMPLETE FUEL FILTER 111
- IN-LINE FUEL FILTER 112
- VST FILTER 113
- WATER SEPARATING FUEL FILTER 110

OIL FILTER 114
- FOR AXIUS POWER STEERING 114
- GUIDE 115

DIESEL
AIR FILTER 120
FUEL FILTERS AND ELEMENTS 116
- BOWLS FILTER 117
- COMPLETE DIESEL FILTER 118
- FILTER SYPE SEPAR2000 120

OIL FILTER 121
- GUIDE 122

TRANSMISSION HURT FILTER 121

CARBURETOR 132
- CARBURATOR ADAPTER KITS 135
- CARBURETORS: NEW 133
- CARBURATORS: REBUILT 132
- CHOKE 142
- FLAME ARRESTORS 142
- FLOAT 136
- FUEL TUBE FROM PUMP --> CARBURATOR 135
- GASKET 137
- GASKET KITS 139
- GUIDE: GASKET KITS 140
- INLET NEEDLE KIT 136
- SCREW 136

FILTER ACCESSORIES 123
FUEL PUMP 124
- COMPLETE FUEL MODULE 128
- ELECTRIC FUEL PUMP & COOLER 129
- FUEL PRESSURE REGULATOR 129
- GASKET 125
- HIGH PRESSURE FUEL PUMP 126
- LOW PRESSURE FUEL PUMP 127
- MECHANICAL 124
- MECHANICAL PUMP GUIDE 125
- VST GASKETS 129

INJEKTOR 130
- FUEL INJECKTOR SEAL KIT 131

TURBO 143
- EXHAUST CLAMP 143
- GASKET KIT 143
- SEAL 143

RACOR 122

ELECTRIC SYSTEM 144

ALTERNATORS & VOLTAGE REGULATORS 153
- ALTERNATOR CONVERSION KIT 155
- VOLTAGE REGULATOR FOR ALTERNATOR 155

SENSORS 144
- AIR TEMPERATURE 148
- AIR VALVE 145
- CAMSHAFT 146
- COMPLETE TEMPERATURE & OI PRESSURE WARNING KIT 147
- COOLANT TEMPERATURE 148
- CRANKSHAFT 146
- GUIDE 149
- IAC 145
- KNOCK 145
- MAT/MAP 144
- OIL PRESSURE 147
- OXYGEN 145
- PICK UP 145
- TPS 144
- TRIM 146
- WATER 148
- WATER TEMPERATURE 148

SOLENOID, RELAY & FUSES 157
- ALARM 160
- ATM, ATC, MAXI FUSES 159
- BATTERY SWITCH FUSES 159
- CIRCUIT BREAKER 158
- DELCO REMY SOLENOID 157
- IGNITION KILL SWITCH 160
- MERCATHODE 159
- POWER TRIM SWITCH ASSY 160

RELAY 158
RELAY FOR ALARM & OTHERS 158
RELAY FOR IGNITION & FUEL PUMP 158
RELAY FOR THROTTLE AND SHIFT 158
SOLENOID 157
SOLENOID EXTENSOR FOR TERMINALS 157
STARTER SOLENOID 157
TRIM FUSE 158
TRIM SOLENOID 157
STARTERS 151
TRIM 155
3 TO 2 WIRE WIRED CONVERTER 156
BRACKET 156
RESERVOIR 156
TRIM ASSY 155

IGNITION SYSTEM 161

DISTRIBUITOR 168
CAP 168
CONDENSERS 170
DISTRIBUTOR 175
ELECTRONIC CONVERSION KITS 172
ELECTRONIC CONVERSION KITS GUIDE 172
ELECTRONIC DISTRIBUTOR 176
IGNITION APPLICATION GUIDE 171
PARTS 173
• DELCO VOYAGER 173
• MPI V6 & V8 175
• THUNDERBOLT IV & V 174
POINTS 170
ROTORS 169
TRIGGERS 169
TUEN UP KITS 170
IGNITION COIL 161
ELECTRONIC IGNITION 161
IGNITION MODULES 162
SPARK PLUG 163
HD SPARK PLUG WIRES SET 167

COOLING SYSTEM 177

BELTS 194
SERPENTINE BELTS GUIDE 197
V-BELTS GUIDE 198
V-BELT GUIDE DIESEL 195
V-BELT GUIDE GAS 195
HEAT EXCHANGER 183
KITS 183
HOSES 198
CYLINDER HEAD --> EXHAUST MANIFOLD 198
HOSES FUEL GUIDE 202
HOSES FUEL GUIDE (SHAFT --> FUEL) 203
HOSES FUEL GUIDE (STERN DRIVES) 201
OIL COOLER 199
OIL COOLER --> THERMOSTAT HOUSING 199
SEAWATER PUMP --> OIL COOLER 199
THERMOSTAT HOUSING --> EXHAUST MANIFOLD 200
TRANSOM --> OIL COOLER 199
WATER PUMP 199
WATER SYSTEM 198
IMPELLER GUIDE 188
OIL COOLER 184
KITS 184
RESERVOIR ASSY KIT 185
THERMOSTAT 177
CHECK BALL KIT 179
FITTING 179
GASKETS 180
SLEEVE 178
TEE VALVE 179
THERMOSTAT COVER 180
THERMOSTAT DIESEL 181
THERMOSTAT HOUSING 177
THERMOSTAT HOUSING KIT 177
THERMOSTAT KITS 181
WATER DISTRIBUTION MODULE 179
WATER PUMPS 185
BRASS WATER PUMP 186
GASKET 187
WATER PUMP SERVICE KIT 189
1 | R | MR | ALPHA ONE 189
ALPHA ONE GEN II 190
BRAVO I, II & III 191
BELT TENSIONER V6 & V8 194
PARTS 192
WATER PUMPS PULLEY 193

ENGINE PARTS 204

MARINE GASKETS TO GM & FORD ENGINES 204
SEALS 215
CRANCKSHAFT SEAL 216
CRANCKSHAFT SEAL GUIDE 216
ENGINE GASKETS 217
INTAKE VALVE 216
O-RING GUIDE 217
OIL SEAL GUIDE 216
VALVE STEAM SEAL 216
TIMING GASKETS 215
TIMING CHAIN COVER GASKETS 215

EXHAUST & INTAKE SYSTEM 218

120 HP GM 153 218
ELBOW MANIFOLD 218
ELBOW MANIFOLD GASKET 218
END CAP 218
END CAP GASKET 218
EXHAUST MANIFOLD 218
MANIFOLD GASKET 218
CAPS & GASKETS 250
END CAP MANIFOLD 250
EXHAUST BELLOW 253
HEAD EXCHANGER END CAP 251
MANIFOLD-ELBOW GASKET 251
MANIFOLD-HEAD GASKET 252
SIDE GASKET CAP 250
WATERS HUTTER 253
ELBOWS 245
CAPS 249
EXHAUST EXTENSIONS 249
KIT RISER 3" 248
KIT RISER 6" 249
SS EXHAUST ELBOW 249
INTAKE MANIFOLD 254
MANIFOLDS 242
MANIFOLDS & ELBOWS PARTS 219
140HP GM181 219
2.5L GM 153 4 cyl, 3.0L 4 cyl (1983-89) 220
3.0L/LX GM 181 222
3.0L MPI 223
165, 170, 180, 190, 470, 485, 488 3.7L/LX MCM 224 CID 224
GM 160, 165, 200CID, 250, 292CID 225
175, 185, 205, 262 MAG, 4.3L/LX/LH/LXH/EFI/MPI, GM 262 CID V6 226
4.3L CARB MPI ALPHA/BRAV 228
262 MAG (TBI), 4.3L/LH/LX/EFI (GEN+), GM 262 V6 (1996-01) 230
V6 231
305, 350, 377, 383, 385, (6.2L) MAG MPI HORIZON ALPHA/BRAVO 232
V8 SMALL BLOCK 234
198MIE, 228/MIE & 898, GM305CID, V8 250, 255MIE & 260 235
200, 228, 230, 230 MIE, 5.0L/LX, 898, 5.0L MPI, GM305 CID, 260/MIE, 320 EFI, 350 MAG, GM350 CID, 5.7L/LX, 6.2L MPI V8 (1983 + 2003) 236
330, 340MIE, 370TRS, 454EFI, 454MAG, 7.4MIE/L/LX, GM454 CID V8 502 EFI/MAG, 8.2L, GM502 CID V8 238
325-325MIE, GM427 CID V8 330/MIE 370TRS - 400TRS - 440TRS - GM454 CID 390 - 390MIE - 460TRS, GM472 CID V8 225/MIE - 250/MIE - GM327CID - 228/MIE GM305CID - 250 - 270 - 270MIE - 280TRS - GM350 CID V8 240
215, 225/MIE, 888 Ford 302 V8 233, 233MIE, 255/MIE, Ford 351 V8 241

TRANSMISSION UNIT 255

ALPHA ONE GEN II 257
BRAVO 255
MC1 | R | MR | ALPHA ONE 256
R | MR | ALPHA ONE 256
ANODES 284
CANADA METAL 288
RECMAR 284
TECNOSEAL 286
ENGINE MOUNT SCREW 305
ENGINE COUPLER ASSEMBLIES 305
GEAR CASE PARTS 258
R | MR | ALPHA ONE 258
MC1 | R 260
MR | ALPHA ONE 264
ALHPA ONE GEN II 268
BRAVO 276
BRAVO I 278
BRAVO II 280
BRAVO III 282
POWER TRIM 305
120-140-165-228-250-260-470-485-888-898 305
R/MR/ALPHA ONE 306
ALPHA ONE GEN II 307
BRAVO 308
POWER TRIM HOSES 309
TRIM PLUGS EXTRACTOR 310
SHIFT 300
CABLE 300
CABLE GUIDE 303
CABLE SLIDE 302
DIGITAL SHIFT ACTUATOR 302
SCREW & PIN 302
SEAL KIT 303
SHIFT CABLE ASSY KIT 300
SHIFT LEVER KIT 302
STEERING CABLE, PRETECH 301
UPPER SHIFT SHAFT 302
SILENBLOCK 304
TOOLS 310
ADAPTOR FOR RECLUBE CONTAINERS 314
BEARING CARRIER RETAINER WRENCH 311
BEARING PULLER 310
BEARING RETAINER WRENCH 314
BELLOW RINGS INTALLATION TOOL 312
BELLOWS EXPANDER TOOLS 312
BOTTLE GREASE PUMP 314
ENGINE ALIGNMENT TOOL 312
GEAR CASE TOOL KIT 311
HINGE PIN TOOL 312
PINION GEAR SHIMMING TOOL 312
PRESSURE / VACUUM TESTER 314
PROP & BEARING PULLER 310
PROP SHAFT ADAPTOR 312
PROP WRENCH KIT 311
PULLEY REMOVER 311
PULLEY ROD 313
TOOLS FOR ELEMENTS TO DRIVESHAFT 313
TRANSOM 290
BELL HOUSING BRAVO 297
BELL HOUSING MC, MR1, ALPHA ONE, GEN II 294
GIMBAL HOUSING BRAVO 296
GIMBAL HOUSING ET POWER STEERING CYLINDER KIT ALPHA ONE GEN I & II 290
GIMBAL HOUSING RING ASSY. BRAVO I, II, & III 298
GIMBALL HOUSING RING ASSY ALPHA ONE GEN II 293
TRANSOM ASSY 290
TRANSOM PLATE, SHIFT CABLE & PUMP ASSY. POWER STEERING 292
TRANSOM COMPONENTS 299
BELLOW KIT 300
EXHAUST BELLOW 300
GASKET SET 299
SHIFT CABLE BELLOW CLAMP 300
SHIFT CABLE BELLOW KIT 299
U-JOINT BELLOWS KIT 299

PROPULSION SYSTEM 315

3 & 4 BLADE AL & SS PROPELLERS 315
PROPELLERS APPLICATION WITH RUBBER HUB 316
PROPELLER FOR BRAVO III 317
PROPELLER FOR ALPHA ONE & BRAVO I 317
PROPELLERS SOLAS APPLICATION GUIDE 318

REF --> OEM 319
OEM --> REF 330

GUÍA DI IDENTIFICAZIONE MODELLO MOTORE 102
GUÍA MANUTENZIONE MOTORI 104
GUIDA MANUTENZIONE TRASMISSIONI 108
KIT MANUTENZIONE PIEDE 108
MATERIALE GENERICO PER LA REVISIONE 109

SISTEMA DI ALIMENTAZIONE E FILTRAZIONE 110

BENZINA
FILTRI ARIA 113
FILTRI BENZINA E RACCORDI 110
- FILTRO CARBURATORE 113
- FILTRO DECANTATORE 111
- FILTRO PER MONTARE IN LINEA 112
- FILTRO SEPARATORE ACQUA-BENZINA 110
- FILTRO VST 113
- RACCORDI IN OTTONE 112
- SUPPORTO 110

FILTRO OLIO 114
- PER MOTORI CON STERZZO IDRULICO AXIUS 114
- GUIDA 115

DIESEL
FILTRO ARIA 120
FILTRI BENZINA E ELEMENTI 116
- FILTRO CON COPPA 117
- FILTRO DECANTATORE 118
- FILTRO DI TIPO SEPAR2000 120

FILTRO TRASMISSIONE HURT 121
FILTRO OLIO 121
- GUIDA 122

ACCESSORI PER FILTRI 123
CARBURATORE 132
- CARBURATORE NUOVI 133
- CARBURATORE RIGENERATI 132
- CHOKE 142
- GALLEGGIANTI 136
- GUARNIZIONE 137
- GUIDA 139
- GUIDA KIT 140
- KIT ADATTATORE CARBURATORI 135
- KIT SPILLO 136
- PARAFIAMMA 142
- TUBO DA COMBUSTIBILE, POMPA --> CARBURATORE 135
- VITI 136

INIETTORE 130
- KIT PARAOLIO 131

POMPA COMBUSTIBILE 124
- GUARNIZIONE VST 129
- GUARNIZIONI 125
- GUIDA POMPI MECCANICHE 125
- MODULO CARBURANTE COMPLETO 128
- POMPA ALTA PRESSIONE 126
- POMPA BASSA PRESIONE 127
- POMPA BENZINA E KIT SCAMBIATORE 129
- POMPA MECCANICA 124
- REGOLATORI PRESSIONE CARBURANTE 129

RACCORDI 122
TURBINE 143
- KIT GUARNIZIONE 143
- FASCETTA SCARICO 143
- PARAOLIO 143

SISTEMA ELETTRICO 144

ALTERNATORI E REGOLATORI 153
- KIT SUSTITUZIONE ALTERNATORE 155
- REGULATORE ALTERNATORE 155

MOTORINI AVVIAMENTO 151
SENSORE 144
- ACQUA 148
- ALBERO A CAMES 146
- DI CADUTA 145
- GUIDA 149
- IAC 145
- MAT/MAP 144
- OXSSIGENO 145
- PICK UP 145
- POSIZIONE ALBERO MOTORE 146
- POSIZIONE ASSE A CAMME 146
- PRESIONE OLIO 147
- TEMPERATURA ACQUA 148
- TEMPERATURA ARIA 148
- TEMPERATURA E PRESSIONE DELL'OLIO 147
- TEMPERATURA SCAMBIATORE 148
- TPS 144
- TRIM 146
- VALVOLA ARIA 145

SOLENOIDI, RELÉ E FUSIBILE 157
- ALLARME 160
- FUSIBILE ATM, ATC, MAXI 159
- FUSIBILE MOTORE 158
- FUSIBILE MOTORINI TRIM 158
- FUSIBILE TERMINALE BATERIA 159
- INTERRUTTORE TRIM 160
- INTERRUTTORI DI STOP 160
- MERCATHODE 159
- PROLUNGA TERMINALE PER SOLENOIDE 157
- RELÉ 158
- RELÉ DI ACCELERATORE E ASSE 158
- RELÉ DI AVVIAMENTO E POMPA BENZINA 158
- RELÉ PER ALARMA E ALTRI 158
- SOLENOIDI 157
- SOLENOIDI AVVIAMENTO 157
- SOLENOIDI DELCO REMY 157
- SOLENOIDI TRIM 157

TRIM 155
- CONVERTITORE CAVI DA 3 A 2 FILI 156
- SUPPORTO 156
- TRIM COMPLETO 155
- VASCHETTA 156

SISTEMA ACCENSIONE 161

BOBINA 161
- ACCENSIONE ELETTRONICA 161

CANDELE 163
- KIT CAVI CANDELE ALTE PRESTAZIONI 167

MODULI AVVIAMENTO 162
SPINTEROGENE 168
- CALOTTE 168
- CONDENSATORI 170
- ESPLOSO 173
- • DELCO VOYAGER 173
- • MPI V6 & V8 175
- • THUNDERBOLT IV & V 174
- GUIDA KIT CONVERIONE ELETTRICO 172
- GUIDA KITS DE ACCENSIONE 171
- KIT D'ACCENSIONE 170
- KIT DI CONVERSIONE ELETTRICO 172
- PUNTINE 170
- ROTORI 169
- SPINTEROGENO 175
- SPINTEROGENO ELETTRICO 176
- TRIGGERS 169

SISTEMA DI RAFFREDDAMENTO 177

CINGHIA 194
- GUIDA BENZINA 195
- GUIDA CINGHIA MOTORE 198
- GUIDA CINGHIA SERPENTINA 197
- GUIDA DIESEL 195

GUIDA GIRANTE 188
KIT RICAMBI 189
- 1 | R | MR | ALPHA ONE 189
- ALPHA ONE GEN II 190
- BRAVO I, II & III 191
- ESPLOSO 192
- PULIGGIA POMPE 193
- TENDICINGHIA V6 & V8 194

MANICOTTO MOTOR 198
- CORPO TERMOSTATO --> COLLETTOR SCARICO 200
- GUIDA MANICOTTO 202
- GUIDA MANICOTTO ASSE-->BENZINA 203
- GUIDA MANICOTTO PIEDE 201
- POMPA ACQUA 199
- POMPA ACQUA --> SCAMBIATORE OLIO 199
- PRESA ACQUA 198
- SCAMBIATORE OLIO 199
- SCAMBIATORE OLIO --> CORPO TERMO-STATO 199
- TESTATA --> COLLETORE DI SCARICO 198
- TRANSOM --> SCAMBIATORE OLIO 199

POMPE ACQUA 185
- GUARNIZIONE 187
- POMPE IN BRONZO 186

RAFFREDDAMENTO DELL'OLIO 184
- KIT BOTTIGLIA OLIO 185
- KIT RAFFREDDAMENTO 184

SCAMBIATORE DI CALORE 183
- KIT 183

TERMOSTATO 177
- ASSE VALVOLA 179
- BOCCOLA 178
- CONNECTTORE 179
- COPERCHIO 180
- CORPO 177
- GUARNIZIONE 180
- KIT CORPO TERMOSTATO 177
- KIT TERMOSTATO 181
- MODULO DISTRIBUZIONE 179
- TERMOSTATO DIESEL 181
- VALVOLA T 179

PARTI MOTORE 204

GUARNIZIONE MOTORI GM E FORD 204
GUARNIZIONE DISTRIBUZIONE 215
- GUANIZIONE CARTER 215

TENUTE 215
- GUARNIZIONE MOTORE 4CYL LINEA 217
- GUIDA O-RING 215
- GUIDA PARAOLIO 216
- GUIDA PARAOLIO ALBERO MOTORE 216
- PARAOLIO VALVOLE 216
- VALVOLA ASPIRAZIONE 216

SISTEMA DI ESCARICO E ASPIRAZIONE 218

120 HP GM 153 218
- COLLETTORE SCARICO 218
- COPERCHIO COLLETTORE 218
- GOMITO DI SCARICO 218
- GUARNIZIONE COLLETTORE 218
- GUARNIZIONE DI SCARICO 218
- GUARNZIONE COPERCHIO COLLETTORE 218

COLLETTORI 242
COLLETTORE ASPIRAZIONE 254
COPERCHI E GUARNIZIONE 250
- COPERCHIO COLLETTORE 250
- COPERCHIO POSTERIORE SCAMBIATORE 251
- CUFFIA DI SCARICO 253
- FARFALLA DI SCARICO 253
- GUARNIZIONE COLLETTORE-GOMITO 251
- GUARNIZIONE COLLETTORE-TESTATA 251
- GUARNIZIONE COPERCHIO LATERALE 250

GOMITI 245
- ESTENSIONI DI SCARICO 249
- GOMITI SCARICO INOX 247
- KIT RISER 3" 248
- KIT RISER 6" 249
- TAPPI 249

PARTI COLLETTORI E GOMITI 219
- 140HP GM181 219
- 2.5L GM 153 4 cyl, 3.0L 4 cyl (1983-89) 220
- 3.0L/LX GM 181 222
- 3.0L MPI 223
- 165, 170, 180, 190, 470, 485, 488 3.7L/LX MCM 224 CID 224
- GM 160, 165, 200CID, 250, 292CID 225
- 175, 185, 205, 262 MAG, 4.3L/LX/LH/LXH/EFI/MPI, GM 262 CID V6 226
- 4.3L CARB MPI ALPHA/BRAV 228
- 262 MAG (TBI), 4.3L/LH/LX/EFI (GEN+), GM 262 V6 (1996-01) 230
- V6 231
- 305, 350, 377, 383, 385, (6.2L) MAG MPI HORIZON ALPHA/BRAVO 232
- V8 SMALL BLOCK 234
- 198MIE, 228/MIE & 898, GM305CID, V8 250, 255MIE & 260 235
- 200, 228, 230, 230 MIE, 5.0L/LX, 898, 5.0L MPI, GM305 CID, 260/MIE, 320 EFI, 350 MAG, GM350 CID, 5.7L/LX, 6.2L MPI V8 (1983 + 2003) 236
- 330, 340MIE, 370TRS, 454EFI, 454MAG, 7.4MIE/L/LX, GM454 CID V8 502 EFI/MAG, 8.2L, GM502 CID V8 238
- 325-325MIE, GM427 CID V8 330/MIE 370TRS - 400TRS - 440TRS - GM454 CID 390 - 390MIE - 460TRS, GM472 CID V8 225/MIE - 250/MIE - GM327CID - 228/MIE GM305CID - 250 - 270 - 270MIE - 280TRS - GM350 CID V8 240
- 215, 225/MIE, 888 Ford 302 V8 233, 233MIE, 255/MIE, Ford 351 V8 241

UNITÀ DI TRASMISSIONE 255

ALPHA ONE GEN II 257
BRAVO 255
R | MR | ALPHA ONE 256
MC1 | R | MR | ALPHA ONE 256
ACCOPPIAMENTO MOTORE 305
ANODI 284
- ANODO CANADA METAL 288
- ANODO RECMAR 284
- ANODO TECNOSEAL 286

ATTREZZI
- ADATTATORE PER CONTENITORI RECLUBE
- ATTREZZO PER CUFFIE
- CENTRATORE MOTORE
- CHIAVE ASSE STRITO
- CHIAVE CARDANO
- CHIAVE PER CUSCINETTO
- CHIAVE PER GLI ELEMENTI DEL CAMBIO
- CHIAVE PER PEIGNONI
- CHIAVE VITE LATERALE TRANSOM
- ESTRATTORE
- ESTRATTORE CUSCINETTI E ELICHE
- ESTRATTORE PIGNONE
- KIT ATTREZZI PIEDI
- KIT CHIAVE ELICA
- PISTOLA OLIO
- STRUMENTO PER L'INSTAL. DELL'ANELLO DEL SOFFIETTO
- VACUOMETRO DOPPIA FUNCIONE

CAMBIO 300
- ACCOPPIO 302
- ALBERINO CAMBIO 302
- ATTUATORE CAMBIO 302
- CAVI DI TIMONERIA PRETEC 301
- CAVO 300
- GUIDA CAVO 303
- KIT CAMBIO 302
- KIT CAVO 300
- KIT TENUTE 303
- VIS E SPINOTTO 302

COMPONENTI TRANSOM 299
- CLIP FUELLE 300
- CUFFIE DI SCARICO 300
- FASCETTA CUFFIE CAMBIO 300
- KIT CUFFIE 299
- KIT CUFFIE CAMBIO 299
- KIT GUARNIZIONI 299

PARTI PIEDI 258
- R | MR | ALPHA ONE 258
- MC1 | R 260
- MR | ALPHA ONE 264
- ALHPA ONE GEN II 268
- BRAVO 276
- BRAVO I 278
- BRAVO II 280
- BRAVO III 282

POWER TRIM 305
- 120-140-165-228-250-260-470-485-888-898 305
- R/MR/ALPHA ONE 306
- ALPHA ONE GEN II 307
- BRAVO 308
- ESTRATTORE PER TAPPI TRIM 310
- TUBI POWER TRIM 309

SILENBLOCK 304
SUPPORTI MOTORE 303
TRANSOM 290
- ALPHA ONE GEN I & II 290
- BRAVO 296
- CAMPANA BRAVO 296
- CAMPANA MC, MR1, ALPHA ONE, GEN II 294
- CAMPANA, CAVO CAMBIO E POMPA STERZO 292
- SUPPORTO ALPHA ONE GEN II 293
- SUPPORTO TRANSOM BRAVO I, II, & III 298
- TRANSOM COMPLETO 291

SISTEMA DI PROPULSIONE 315

ELICHE AL E INOX DE 3 E 4 PALE 315
- ELICHE PER ALPHA ONE & BRAVO I 317
- ELICHE PER BRAVO III 317
- GUIDA APPLICAZIONE ELICHE **SOLAS** 318
- GUIDA ELICHE CON MOZZO 316

REF --> RO 319
RO --> REF 330

FR

GUIDE D'IDENTIFICATION MOTEURS 102
GUIDE MAINTENANCE MOTEURS 104
GUIDE MAINTENANCE TRANSMISSIONS 108
KIT D'ENTRETIEN DES EMBASSES 108
MATÉRIAUX GÉNÉRIQUES POUR L'EXAMEN 109

SYSTÈME D'ALIMENTATION ET FILTRATION 110

ESSENCE
FILTRE AIRE 113
FILTRE À HUILE 114
- PARA DIRECCIÓN HIDRÁULICA AXIUS 114
- GUÍA 115

FILTRE ET CARTOUCHES DE RECHANGE 110
- BRACKET 110
- FILTRE À ESSENCE CARBURATEUR 113
- FILTRE À ESSENCE EN LIGNE 112
- FILTRE DÉCANTATEUR 111
- FILTRE SÉPARATEUR D'EAU 110
- FILTRE VST 113
- RACCORDS À LAITON 112

DIESEL
FILTRE AIRE 120
FILTRE À HUILE 121
- GUIDE 122

FILTRE ET CARTOUCHES DE RECHANGE 116
- FILTRE AVEC COUPE 117
- FILTRE DECANTATEUR 118
- FILTRE TYPE SEPAR2000 120

FILTRE TRANSMISSION HURT 121

ACCESSORIOE POUR FILTRES 123
CARBURATEUR 132
- ARRÊTEURS DE FLAMMES 142
- CARBURATEUR NOUVEAU 133
- CARBURATEUR REMANUFACTURÉS 132
- CHOKE 142
- FLOTEURS 136
- GUIDE 139
- GUIDE DES KITS 140
- JOINTS 137
- KIT ADAPTATEURS 135
- KIT POINTEAU 136
- TUYAU, POMPE --> CARBURATEUR 135
- VIS 136

INJECTEURS 130
- KIT JOINTS 131

POMPE À CARBURANT 124
- GUIDE DE POMPES MECANIQUES 125
- JOINTS 125
- JOINTS VST 129
- MODULE DE CARBURANT COMPLET 128
- POMPE BASE PRESSION 127
- POMPE ET REFROIDISEUR 129
- POMPE HAUTE PRESSION 126
- POMPE MECANIQUE 124
- REGULATEUR PRESSION DE CARBURANT 129

RACCORDS 122
TURBO 143
- KIT JOINTS 143
- COLLIER ÉCHAPPEMENT 143
- JOINT SPI DE TURBO 143

SYSTÈME ÉLÉCTRIQUE 144

ALTERNATEURS ET REGULATEURS 153
- KIT ALTERNATEUR 155
- REGULATEUR ALTERNATEUR 155

CAPTEURS 144
- CAPTEUR DE CLIQUETIS 145
- GUIDE DES SONDES 149
- IAC 145
- MAT/MAP 144
- OXYGENE 145
- PICK UP 145
- PRESSION D'HUILE 147
- SONDE DE L'EAU 148
- SONDE POSITION ARBRE À CAMMES 146
- SONDE POSITION VILEBREQUIN 146
- SOUPAPE D'AIRE 145
- TEMPERATURAE DE REFROISISSEUR 148
- TEMPERATURE DE L'AIRE 148
- TEMPERATURE DE L'EAU 148
- TEMP. ET PRESSION D'HUILE AVEC ALARME 147
- TPS 144
- TRIM 146

DÉMARREUR 151
SOLÉNOÏDE, RELAIS ET FUSIBLES 157
BUZZER D'ALARME 160
COMMUTATEUR DE TRIM 160
EXTENSION POUR SOLÉNOÏDE 157
FUSIBLE ATM, ATC, MAXI 159
FUSIBLE MOTEUR 158
FUSIBLE TERMINAL DE BATERIE 159
FUSIBLE TRIM 158
INTERRUPTEUR DE STOP 160
MERCATHODE 159
RELAIS 158
RELAIS DE DÉMARREUR ET POMPE D'ESSENCE 158
RELAIS POUR ALARME ET D'AUTRES 158
RELAIS POUR L'ACCÉLÉRATION ET L'ARBRE 158
SOLÉNOÏDE 157
SOLÉNOÏDE DELCO REMY 157
SOLÉNOÏDE DÉMARREUR 157
SOLÉNOÏDE TRIM 157
TRIM 155
FAISCEAU CONVERTISSEUR 3 À 2 FILS 156
RESERVOIR 156
SUPPORT 156
TRIM COMPLET 155

SYSTÈME D'ALLUMAGE 161
ALLUMEUR 168
CONDENSATEUR 170
DISTRIBUTEUR 175
DISTRIBUTEUR ÉLÉCTRONIQUE 176
DOIGT D'ALLUMEUR 169
GUIDE KITS D'ALLUMAGE 171
GUIDE KITS DE CONVERSION ÉLÉCTRONIQUE 172
KIT DOIGT D'ALLUMEUR 169
KITS DE CONVERSION ÉLÉCTRONIQUE 172
KITS S'LLUMAGE 170
PIÈCES 173
• DELCO VOYAGER 173
• MPI V6 & V8 175
• THUNDERBOLT IV & V 174
TÊTE D'ALLUMEUR 168
VIS PLATINÉS 170
BOBINE D'ALLUMAGE 161
ALLUMAGE ÉLÉCTRONIQUE 161
BOUGIES 163
KIT FAISCEAU DE BOUGIE 167
MODULES D'ALLUMAGE 162

SYSTÈME DE REFROIDISSEMENT 177
COURROIES 194
GUIDE DE COURROIES MOTEUR 198
GUIDE DE COURROIES SERPENTINE 197
GUIDE DIESEL 195
GUIDE GAS 195
ÉCHANGEUR DE CHALEUR 183
KITS 183
GUIDE TURBINES 188
KIT REPARATION DE POMPE À EAU 189
1 | R | MR | ALPHA ONE 189
ALPHA ONE GEN II 190
BRAVO I, II & III 191
PIÈCES 192
POULIE 193
TENDEUR DE COURROIE V6 & V8 194
POMPE D'EAU 185
POMPE À EAU BRONZE 186
JOINTS 187
REFROIDISSEUR D'HUILE 184
KITS REFROIDISSEUR 184
KITS RESERVOIR D'HUILE 185
THERMOSTAT 177
AXE VALVE 179
CALE 178
CORPS 177
COUVERCLE 180
JOINTS 180
KIT CORPS DE THERMOSTAT 177
KITS THERMOSTATS 181
MODULE DE DISTRIBUTION 179
RACCORD VIDANGE 179
THERMOSTATS DIESEL 181
VALVE T 179
TUYAU MOTEUR 198
CORP THERMOSTAT --> D'ÉCHAPPEMENT 200
CULASSE --> COLLECTEUR D'ÉCHAPP. 198
ENTRÉE D'EAU 198
GUIDE TUYAUX 202
GUIDE TUYAUX ARBRE-ESSENCE 203
GUIDE TUYAUX D'EMBASE 201
POMPE D'EAU 199
POMPE D'EAU --> REFFROIDISSEUR D'HUILE 199
REFFROIDISSEUR D'HUILE 199
REFFROIDISSEUR --> CORP THERMOSTAT 199
TRANSOM --> REFFROIDISSEUR D'HUILE 199

PIÈCES MOTEUR 204
JOINTS DISTRIBUTION 215
JOINTS COIVERCLE 215
JOINTS D'HUILE 215
GUIDE JOINTS D'HUILE 216
GUIDE JOINTS D'HUILE VILEBREQUIN 216
GUIDE JOINTS SPI 215
JOINT DE SOUPAPE 216
JOINTS D'HUILE VILEBREQUIN 216
JOINTS MOTEUR 4CYL EN LIGNE 217
SOUPAPE ADMISSION 216
JOINTS POUR MOTEUR GM ET FORD 204

SYSTÈME ÉCHAPPEMENT ET ADMISSION 218
120 HP GM 153 218
COLLECTEUR D'ÉCHAPPEMENT 218
COUDE D'ÉCHAPPEMENT 218
COUVERCLE COLLECTEUR 218
JOINT COLLECTEUR 218
JOINT COUDE D'ÉCHAPPEMENT 218
JOINT COUVERCLE COLLECTEUR 218
COLLECTEURS 242
COLLECTEUR ADMISSION 254
COUDES 245
BOUCHONS 249
COUDES D'ÉCHAPPEMENT INOX 247
KIT RISER 3" 248
KIT RISER 6" 249
PROLONGATEURS D'ÉCHAPPEMENT 249
COUVERCLES ET JOINTS 250
CLAPET D'ÉCHAPPEMENT 253
COUVERCLE COLLECTEUR 250
SOUFFLET D'ÉCHAPPEMENT 253
JOINTS COLLECTEUR - COUDE 251
JOINTS COLLECTEUR-CULASSE 252
JOINTS COUVERCLE LATERAL 250
JOINTS DE L'ÉCHANGEUR 251
PIÈCES COLLECTEURS ET COUDES 219
140HP GM181 219
2.5L GM 153 4 cyl, 3.0L 4 cyl (1983-89) 220
3.0L/LX GM 181 222
3.0L MPI 223
165, 170, 180, 190, 470, 485, 488 3.7L/LX MCM 224 CID 224
GM 160, 165, 200CID, 250, 292CID 225
175, 185, 205, 262 MAG, 4.3L/LX/LH/LXH/EFI/MPI, GM 262 CID V6 226
4.3L CARB MPI ALPHA/BRAV 228
262 MAG (TBI), 4.3L/LH/LX/EFI (GEN+), GM 262 V6 (1996-01) 230
V6 231
305, 350, 377, 383, 385, (6.2L) MAG MPI HORIZON ALPHA/BRAVO 232
V8 SMALL BLOCK 234
198MIE, 228/MIE & 898, GM305CID, V8 250, 255MIE & 260 235
200, 228, 230, 230 MIE, 5.0L/LX, 898, 5.0L MPI, GM305 CID, 260/MIE, 320 EFI, 350 MAG, GM350 CID, 5.7L/LX, 6.2L MPI V8 (1983 + 2003) 236
330, 340MIE, 370TRS, 454EFI, 454MAG, 7.4MIE/L/LX, GM454 CID V8 502 EFI/MAG, 8.2L, GM502 CID V8 238
325-325MIE, GM427 CID V8 330/MIE 370TRS - 400TRS - 440TRS - GM454 CID 390 - 390MIE - 460TRS, GM472 CID V8 225/MIE - 250/MIE - GM327CID - 228/MIE GM305CID - 250 - 270 - 270MIE - 280TRS - GM350 CID V8 240
215, 225/MIE, 888 Ford 302 V8 233, 233MIE, 255/MIE, Ford 351 V8 241

EMBASES ET PIÈCES 255
ALPHA ONE GEN II 257
BRAVO 255
MC1 | R | MR | ALPHA ONE 256
R | MR | ALPHA ONE 256
ACCOUPLEMENT MOTEUR 305
ANODES 284
ANODE CANADA METAL 288
ANODE RECMAR 284
ANODE TECNOSEAL 286
CHANGEMENT 300
ACTIONNEUR DE CHANGEMENT ÉLÉCTRÓN. 302
ARBRE CHANGEMENT 302
ATTACHE 302
CÂBLE 300
CÂBLES DE COMMANDE PRETEC 301
GUIDE CÂBLE 303
KIT CÂBLE 300
KIT JOINT D'HUILE 303
KITS CHANGEMENT 302
VIS ET PIN 302
COMPONENTS TRANSOM 299
CLIPS 300
COLLIER SOUFFLET CHANGEMENT 300
KIT JOINTS 299
KIT SOUFFLET 299
KIT SOUFFLET CHANGEMENT 299
SOUFFLET D'ÉCHAPPEMENT 299
OUTILS 310
ADAPTATEUR ARBRE DE TRANSMISSION 313
ADAPTATEUR CONTENEURS D'HUILE RECLUBE 314
CLÉ POUR ARBRE D'HÉLICE 312
CLÉ POUR ARBRE VERTICAL 311
CLÉ POUR ÉCROU D'ARBRE 314
CLÉ POUR ÉCROU DE DIABOLO 311
CLÉ POUR PIGNONS 312
EXTRACTEUR DE POULIE 313
EXTRACTEUR DE ROULEMENTS 310
EXTRACTEUR DE ROULEMENTS ET D'HÉLICE 310
OUTIL D'ALIGNEMENT 312
OUTIL D'INSTALLATION ANNE DE SOUFFLET 312
OUTIL DE MONTAGE SOUFFLETS 312
OUTILS OUR EMBASES 311
PISTOLET POUR HUILE D'EMBASE 314
VACUOMETRE DOUBLE FONCTION 314
PIÈCES D'EMBASES 258
R | MR | ALPHA ONE 258
MC1 | R 260
MR | ALPHA ONE 264
ALHPA ONE GEN II 268
BRAVO 276
BRAVO I 278
BRAVO II 280
BRAVO III 282
POWER TRIM 305
120-140-165-228-250-260-470-485-888-898 305
ALPHA ONE GEN II 307
BRAVO 308
R/MR/ALPHA ONE 306
EXTRACTEUR BOUCHONS DE TRIM 310
FLEXIBLE DE POWER TRIM 309
TRANSOM 290
ALPHA ONE GEN I & II 290
BRAVO 296
CASQUE BRAVO 296
CASQUE MC, MR1, ALPHA ONE, GEN II 294
CASQUE, CÂBLE CHANGEMENT ET POMPA DIRECTION 292
SUPPORT ALPHA ONE GEN II 293
SUPPORT TRANSOM BRAVO I, II, & III 298
TRANSOM COMPLET 291
SILENBLOCK 304
SUPPORT MOTEUR 303

SYSTÈME DE PROPULSION 315
HÉLICES AL ET INOX DE 3 ET 4 PALES 315
GUIDE DES HÉLICES ET MOYEUX 316
HÉLICES POUR BRAVO III 317
HÉLICES POUR ALPHA ONE & BRAVO I 317
TABLEAU D'APPLICATION D'HÉLICES SOLAS 318

REF --> RO 319
RO --> REF 330

GUÍA IDENTIFICACIÓN DE MODELOS — MODEL IDENTIFICATION CHART — GUIDA DI IDENTIFICAZIONE MODELLO MOTORE — GUIDE D'IDENTIFICATION MOTEURS

	MOD.	S/N	
SEA RAY	3.0L	B787205-B917529	1988
	4.3L	B785483-B921276	1988
	4.3LX	B785981-B922330	1988
	5.7L	B784799-B917017	1988
	SRX5.7L, 350 MAG	B785241-B919012	1988
	SRX7.4L, 454 MAG ALPHA	B785149-B924857	1988
	SRX7.4L-H, 454 MAG BRAVO	B721206-B919343	1988
STERN DRIVES	SRX7.4L, ALPHA	B803866-C348032	1988
	SRX7.4L-H, BRAVO	B803872-B999972	1988
INBOARD ENGINES	5.7L	B788204-B919356	1988
	7.4L	B788179-B913769	1988
RENAULT 4 CYL. (STERN DRIVE)	60	1887079-5049044	1965-68
	80	2049045-2851423	1966-69
	90	2851424-3226957	1970-72
GM 4 CYL. (STERN DRIVE)	110	1537370-2044033	1963-66
	120	1666601-3377340	1964-72
	120	3377341-3770649	1972-73
	120	3770650-4952700	1974-77
	120	4952701-5192048	1978
	120	5192049-6229717	1979-82
	120	6229718-6853913	1983-84
	120	6853914-B531853	1985-86
	120/2.5L	B531854-C853255	1987-89
	140	2508261-6229717	1968-82
	140/3.0L	6229718-C856558	1982-89
	3.0L/LX	C856559+	1990
MERCURY MARINE 4 CYL. (STERN DRIVE)	470 (2 BBL)	4208730-5520114	1976-79
	470 (2 BBL)	5520115-6218036	1980-82
	470 (2 BBL)	6218037-6916778	1983-84
	170 (2 BBL)	6916779	1985-86
	165/3.7L (2 BBL)	6916779	1987-89
	485 (2 BBL)	5685394-6218036	1980-82
	488 (4 BBL)	6170297-6916778	1983-84
	190 (4 BBL)	6916779	1985-86
	180/3.7LX (4 BBL)	6916779	1987-89
GM INLINE 6 CYL. (STERN DRIVE)	140	1538930-1725960	1963
	150	1666495-2048046	1964-66
	160	2048022-2770031	1967-69
	165	2770032-5178958	1970-78
	165	5178959-5813433	1979-81
	200	2453769-2712072	1969
GM V6 (STERN DRIVE)	185 (4 BBL)	6330183-6919655	1983-84
	185 (2 BBL)	A331455-B527954	1985-87
	175/4.3L (2 BBL)	B527955-D714106	1987-92
	4.3L (GEN II) (2 BBL)	D714107-F000877	1992-93
	4.3L (GEN II) (2 BBL)	F000878-F601126	1993-95
	4.3L (GEN II) (2 BBL)	F601127-F000878	1996
	4.3LX (GEN+) (2 BBL)	F803000-K999999	1996-97
	4.3L (GEN+) (2 BBL)	L010044+	1998
	4.3L EFI (GEN+) (TBI)	L012009+	1998
	205 (4 BBL)	A331455-B527954	1985-87
	205/4.3LX (4 BBL)	B527955-D714369	1987-91
	4.3LX (GENII) (4 BBL)	D714370-F001219	1992-93
	4.3LX (GENII) (4 BBL)	F001220-F601126	1993-95
	4.3LX (GENII) (4 BBL)	F601127-F802999	1996
	4.3LXH (GEN+) (4 BBL)	F803114+	1996-97
	4.3LH (GEN+) (4 BBL)	L010044+	1998
	262 MAG (TBI) (GEN+)	F803800-K999999	1996-97
FORD V8 (STERN DRIVE)	888 (2 BBL)	3108723-4887829	1971-77
	215 (4 BBL)	2781153-3385720	1970-72
	225 (4 BBL)	3385721-4166999	1973-74
	225-S (4 BBL)	3385721-4166999	1973-74
	233	4173000-4902304	1975-77
	255	3258728-4175499	1971-74

	MOD.	S/N	
GM V8 283, 327, 305 & 350 CID	190	1564539-1730903	1963-64
	898 (2 BBL)	4762210-6218461	1977-82
	898 (2 BBL)	6218462-B525981	1983-84
	200/5.0L (2 BBL)	6218462-F600999	1985-95
	5.0L (2 BBL)	L015751+	1998
	5.0L EFI	L012052-L340000	1998-99
	228 (4 BBL)	4765100-5170008	1977-78
	228 (4 BBL)	5170009-6218461	1979-82
	228 (4 BBL)	6218462-B525981	1982-84
	230 (4 BBL)	6218462-B525981	1985-86
	230/5.0LX (4 BBL)	B525982-F600999	1987-95
	225	1539620-2694014	1963-69
	250	2314301-2639854	1968-69
	255	417550-4767999	1975-76
	250	4768000-4908849	1977
	260/5.7L	4908850-6218461	1978-82
	260/5.7L	621462-B525981	1982-86
	260/5.7L	B525982-F600999	1987-95
	5.7L (2 BBL)	F601000+	1996-98
	5.7L EFI	F225560+	1995
	5.7LX (4 BBL)	F601000-K999999	1996-97
	5.7LX EFI	F752400-K999999	1996-97
	5.7LX BRAVO EFI	F800300-K999999	1996-97
	350 MAG ALPHA	A635178-B525981	1986-87
	350 MAG ALPHA	B525982-F600999	1987-95
	350 MAG ALPHA	F601000-K001526	1996
	350 MAG ALPHA	K001527-K999999	1997
	350 MAG ALPHA EFI	F800300-K999999	1996-97
	350 MAG BRAVO MPI	F415189-K999999	1995-97
	350 MAG BRAVO MPI (GEN+)	F602000-K999999	1996-97
	350 MAG MPI (GEN+)	L010019+	1998
	270	2851074-3385720	1969-72
	280TRS	4176250-4770199	1975-76
	300 TEMPEST	6668677-B430367	1985-86
	320 EFI	A543604-C622418	1987-89
GM V8 427, 454, 502, 540 & 572 (STERN DRIVE)	325	2278747-3780449	1969-72
	330	4623115-6083144	1977-81
	330	6083145-B816450	1982-87
	7.4L BRAVO	B771113-D603117	1988-91
	7.4L BRAVO (GEN V)	D603118-F800699	1992-96
	7.4L BRAVO (GEN VI)	F800700-K999999	1996-97
	7.4LX BRAVO (MPI) (GEN V)	F602010-F801999	1996
	7.4LX BRAVO (MPI) (GEN VI)	F802000-K999999	1996-97
	7.4L MPI (GEN VI)	L010003+	1998
	7.4LX BRAVO (TBI) (GEN VI)	F820000-K999999	1996-97
	454 MAG ALPHA	A631894+	1986-88
	454 MAG BRAVO (GEN V)	D805069-F304999	1992-94
	454 MAG BRAVO (GEN V)	F305000-F801699	1995-96
	454 MAG BRAVO (GEN VI)	F801700-K999999	1996-97
	454 EFI (GEN V)	F115700-F802349	1994-96
	454 MAG MPI (GEN VI)	F802350-K999999	1996-97
	454 MAG MPI (GEN VI)	L010029-L085399	1998
	454 MAG MPI (GEN VI)	L085400+	1999
	370 TRS	4179554-6721527	1978-85
	370 TRS	6721528-B714586	1985-87
	400 TRS	4179554-B457644	1980-86
	420	A398941-D937011	1987-89
	425	A398941-D937011	1990-93
	440 TRS	4179554-B485220	1983-86
	450 (GEN V)	F347100-F347277	1995-96
	525 SC	D456000-F348963	1991-92
	525 SC (GEN V)	D456000-F348963	1992-95
	525 SC (GEN V)	F615814-F745215	1996
	525 SC (GEN VI)	F745260+	1996-97
	390	2781129-3042731	1969-70
	460 TRS	4719554-6181046	1983-86
	465	C849992-F213244	1990-92
	465 (GEN V)	C849992-F213244	1992-94

	MOD.	S/N	
GM V8 427, 454, 502, 540 & 572 (STERN DRIVE)	500 (GEN V)	F213293-F745159	1994-96
	500 (GEN VI)	F745195-L001772	1997-98
	502 MAG BRAVO	C878221-D824588	1990-92
	502 MAG BRAVO (GEN V)	D824589-F114528	1992-93
	502 EFI (GEN V)	D840650-F802599	1993-96
	502 MAG MPI (GEN VI)	F802600-K999999	1996-97
	500 EFI	L001477+	1999
	502 MAG MPI (GEN VI)	L085433+	1998
	600 SC	D456489-F877642	1991-92
	600 SC (GEN V)	D456489-F877642	1992-96
	600 SC (GEN VI)	K000227+	1997
	500 BULLDOG	C577254-F745405	1990-96
	500 BULLDOG	K000248+	1997
	575	A677429-D763716	1986-92
	800 SC (GEN V)	D763836+	1993-96
MCM 4, 5, 6 & V8 CYL. DIESEL (STERN DRIVE ENGINE)	ROVER 60HP	31400000F+	1965-67
	530 D-TA 150 HP	B993000-B993492	1989
	636 D-TA 180 HP	B993500-C696047	1989
	D183 140 HP	B993493-D725149	1990-93
	D219 170 HP	C696048-D850124	1990-93
	D254 200 HP	C849484-D554729	1990-93
	D3.0L 140 HP	D725150+	1994
	D3.6L 170 HP	D850125+	1994
	D4.2L 200 HP	D554730+	1994
	D7.3L 238 HP	F060000+	1994
MERCURY MARINE MIE 4 CYL (INBOARD)	470	5520115-6218036	1980-81
GM MIE V8 305, 327, 350 CID (INBOARD)	198	4762210-6218461	1977
	228	4765100-5170008	1977-78
	228	5170009-5907057	1978-80
	230/5.0L (4 BBL)	5907058-B788151	1981-87
	225	2278647-2694014	1968
	250	2314301-2639854	1968-69
	255	4175500-5907057	1975-80
	260/5.7L	5907058-F024999	1981-93
	270	2851074-3077735	1969-72
	5.7L	F025000-K999999	1994-97
	5.7L (GEN+)	L002003+	1998
	5.7L MPI	K040300-K999999	1997
	350 MAG MPI (GEN+)	L002008-L304499	1998
	350 MAG MPI (GEN+)	L304500+	1999
	350 HORIZON	L304700+	1999
	5.7L SKI	A338533-B514626	1985-87
	5.7L COMPETITION SKI	B514627-F775199	1987-95
	5.7L COMPETITION SKI	F775200-K040003	1996
	5.7L COMPETITION SKI	K040004-K999999	1997
	5.7L COMPETITION SKI (GEN+)	L002005+	1998
	350 MAG SKI	D505454-K999999	1991-97
	350 MAG EFI SKI	F215561-K999999	1994-97
	350 MAG MPI SKI	F350583-F799999	1995-98
	BLACK SCORPION SKI	F800000+	1996-98
GM MIE V8 427, 454, 482 & 502 CID (INBOARD)	325	2278747-3780449	1968-74
	330	4623115-5889913	1977-80
	340/7.4L W/B/W MK4	5889914	1981-92
	7.4L W/HURTH (LH) MK4	C391564-D715493	1989-92
	7.4L (LH)	D715494-K999999	1992-97
	7.4L MPI (LH)	F563050-K999999	1995-97
	7.4L MPI (L29) (GEN VI)	L002006+	1998
	7.4L TBI (LH) (GEN VI)	F874815-K999999	1996-97
	454 MAG MPI HORIZON	L002200-L086049	1998-99
	454 EFI (SKI) (GEN V)	F215800-F820099	1995-96
	454 MAG MPI (SKI) (GEN VI)	F820100-K999999	1996-97
	350	9780450-4623109	1974-76
	390	2781129-2825059	1969-70
	8.2L W/HURTH	C878221-D857199	1990-92
	8.2L (GEN V)	D857200-F819619	1993-96
	8.2L MPI (LH) (GEN VI)	F819620-K999999	1996-97
	8.2L MPI (LH) (GEN VI)	L002450-L0086012	1998
	8.2L MPI (LH) (GEN VI)	L0086013+	1999

	MOD.	S/N	
FORD MIE V8 (INBOARD)	215	2781153-3563181	1970-72
	225	3385721-4176999	1970-72
	233	4173000-4775784	1975-76
	255	3258728-4178299	1973-74
MIE 5, 6 & V8 CYL. DIESEL INBOARD ENGINES	530 D-TA 150 HP	B993002-C539258	1989
	636 D-TA 180 HP	B993750-C696011	1989
	D183 150 HP	C539259-D725149	1990-93
	D219 180 HP	C696012-D850124	1990-93
	D254 210 HP	C849461-D554729	1990-93
	D3.0L 150 HP	D725150+	1994
	D3.6L 180 HP	D850125+	1994
	D4.2L 210 HP	D554730+	1994
	D7.3L 262 HP	F060000+	1994
MC 60, 80 & 90 STERN DRIVES & TRANSOM PLATES	60 (0)	1830753-2063740	1965-66
	80	2063741-2898029	1966-69
	90	2898020-3225967	1970-72
MC I, II & III	I	1534570-1684187	1963
	II (1.33:1)	1474909-2278488	1962-67
	II (1.78:1)	2398798-2671321	1968-69
	III	2373127-3002613	1968-72
	III	5128065	1978
MC 1A, 1B & 1C	1A, 1B & 1C	1684188-1777798	1964
	1A, 1B & 1C (E-Z SHIFT)	1776349-2065189	1965-66
MC 120, 140, 160 & 165	120/140	2062141-378049	1967-73
	120/140	3780850-4893634	1974-77
	120/140	4893635-6225576	1978-82
	160	2065190-2763441	1967-69
	165	2763442-3780849	1970-73
	165	3780849-4890459	1974-77
	165	4890460-6268064	1978-82
MC 470 & 485	470	4208730-4893830	1976-77
	470	4893835-6225576	1978-82
	485	5487437-6225576	1980-82
MC 488, 225S & 233	888	3106717-3784374	1971-73
	888	3784375-4782329	1974-77
	225S	3856268-4200499	1974
	233	4200500-4782329	1975-77
MC 898, 228, 250 & 260	898/228	4782330-4898729	1977
	898/228	4898730-6229157	1978-82
	250	4791300-4898729	1977
	260	4898730-6229157	1978-82
MC R, MR, ALPHA ONE, ALPHA ONE SS & ALPHA ONE GEN II	R	6152230-6847029	1983-84
	MR	6810538-A479506	1985
	ALPHA ONE	A470165+	1986-90
	ALPHA ONE SS	A545004+	1986-89
	ALPHA ONE GEN II	D469859+	1991
MC BRAVO & BLACKHAWK	BRAVO ONE	B664190+	1988
	BRAVO TWO	C564952+	1989
	BRAVO THREE	D763691+	1993
	BLACKHAWK	F186717+	1994
MC 215E & 215 H	215 H	2782203-2909034	1970
	215 E	2782203-2909034	1970-72
MC TR & TRS	TR	3377316-3787239	1973
	TR	3787240-4794899	1974-76
	TR	4794900-5009866	1977
	TR	5009867	1978
	TRS	3787240-4203749	1974-75
	TRS	4203750-4795399	1976
	TRS	4795400	1977

GUÍA MANTENIMIENTO DE MOTORES | ENGIEN MAINTENANCE GUIDE | GUIDA MANUTENZIONE MOTORI | GUIDE MAINTENANCE MOTEURS

GAS

	REF						UN.
3.0L GM181 I/L4 1987+ (0B450801+)	NGKBR6FS	(-0L096999)	BUJIA	SPARK PLUG	CANDELE	BOUGIE	4
	NGKBPR6EFS	(0L097000+)	BUJIA	SPARK PLUG	CANDELE	BOUGIE	4
	REC3852106	(-0L382121)	CORREA ALTERNADOR	ALTERNATOR BELT	CINGHIA ALTERNATORE	COURROIE ALTERNATEUR	1
	RM57-862054Q	(0L382122+)	(dirección hidráulica)	(hydraulic steering)	(sterzo idraulico)	(direction hydraulique)	
	REC57-49043A1		CORREA ALTERNADOR (sin dirección hidráulica)	ALTERNATOR BELT (without hydraulic steering)	CINGHIA ALTERNATORE (senza sterzo idraulico)	COURROIE ALTERNATEUR (sans direction hydraulique)	1
	REC57-65607Q		CORREA DIRECCIÓN HIDRÁULICA	HYDRAULIC STEERING BELT	CINGHIA STERZO IDRAULICO	COURROIE DIRECTION HYDRAULIQUE	1
	REC59078Q3	(-0L340999)	TERMOSTATO	THERMOSTAT	TERMOSTATO	THERMOSTAT	1
	REC8M0091470	(0L341000+)	TERMOSTATO (Enfriador cerrado)	THERMOSTAT (closed cooling)	TERMOSTATO (raffreddamento chiuso)	THERMOSTAT (refroidisseur fermé)	1
	REC35-06003		FILTRO ACEITE	OIL FILTER	FILTRO OLIO	FILTRE D'HUILE	1
	REC25W40U3		ACEITE MOTOR	OIL	OLIO MOTORE	HUILE MOTEUR	1
3.0LX GM181 I/L4 (1990-1997) (0C856569 - 0K999999)	NGKBR6FS	(-0F603999)	BUJIA	SPARK PLUG	CANDELE	BOUGIE	4
	NGKBPR6EFS	(0F604000+)	BUJIA	SPARK PLUG	CANDELE	BOUGIE	4
	REC57-49043A1		CORREA ALTERNADOR (1 polea grove)	ALTERANTOR BELT (1 grove pulley)	CINGHIA ALTERNATORE (1 puleggia grove)	COURROIE ALTERNATEUR (1 poulie grove)	1
	REC3852106		CORREA ALTERNADOR (3 poleas grove)	ALTERANTOR BELT (3 grove pulley)	CINGHIA ALTERNATORE (3 puleggia grove)	COURROIE ALTERNATEUR (3 poulies grove)	1
	REC59078Q3		TERMOSTATO	THERMOSTAT	TERMOSTATO	THERMOSTAT	1
	REC8M0091470		TERMOSTATO (Enfriador cerrado)	THERMOSTAT (closed cooling)	TERMOSTATO (raffreddamento chiuso)	THERMOSTAT (refroidisseur fermé)	1
	REC57-65607Q		FILTRO ACEITE	OIL FILTER	FILTRO OLIO	FILTRE D'HUILE	1
	REC35-06003		FILTRO ACEITE	OIL FILTER	FILTRO OLIO	FILTRE D'HUILE	1
	REC25W40U3		ACEITE MOTOR	OIL	OLIO MOTORE	HUILE MOTEUR	1
3.0 MPI EC (1A072812+)	NGKTR6IX		BUJIA	SPARK PLUG	CANDELE	BOUGIE	4
	RM57-862054Q		CORREA ALTERNADOR	ALTERANTOR BELT	CINGHIA ALTERNATORE	COURROIE ALTERNATEUR	1
	REC8M0091470		TERMOSTATO	THERMOSTAT	TERMOSTATO	THERMOSTAT	1
	REC57-65607Q		CORREA DIRECCIÓN HIDRÁULICA (940 mm)	HYDRAULIC STEERING BELT (940 mm)	CINGHIA STERZO IDRAULICO (940 mm)	COURROIE DIRECTION HYDRAULIQUE (940 mm)	1
	REC35-06003		FILTRO ACEITE	OIL FILTER	FILTRO OLIO	FILTRE D'HUILE	1
	RM35-866594Q01		FILTRO GASOLINA	FUEL FILTER	FILTRO BENZINA	FILTRE ESSENCE	1
	REC25W40U3		ACEITE MOTOR	OIL	OLIO MOTORE	HUILE MOTEUR	1
3.0L TKS Plus (1G404114)	NGKBPR6EFS		BUJIA	SPARK PLUG	CANDELE	BOUGIE	4
	RM57-862054Q		CORREA ALTERNADOR	ALTERANTOR BELT	CINGHIA ALTERNATORE	COURROIE ALTERNATEUR	1
	REC8M0091470		TERMOSTATO	THERMOSTAT	TERMOSTATO	THERMOSTAT	1
	REC35-06003		FILTRO ACEITE	OIL FILTER	FILTRO OLIO	FILTRE D'HUILE	1
	REC25W40U3		ACEITE MOTOR	OIL	OLIO MOTORE	HUILE MOTEUR	1
4.3L (GEN II) (1992-96) (0D714107 - 0F802999)	NGKBR6FS		BUJIA	SPARK PLUG	CANDELE	BOUGIE	6
	REC829207		CORREA ALTERNADOR (46")	ALTERANTOR BELT (46")	CINGHIA ALTERN. (46")	COURROIE ALTERN. (46")	1
	REC57-816295Q		CORREA DIRECCION HIDRAULICA	HYDRAULIC STEERING BELT	CINGHIA STERZO IDRAULICO	COURROIE DIRECTION HYDRAULIQUE	1
	REC8M0089715		TERMOSTATO 140°	THERMOSTAT 140°	TERMOSTATO 140°	THERMOSTAT 140°	1
	REC8M0091470		TERMOSTATO 160°	THERMOSTAT 160°	TERMOSTATO 160°	THERMOSTAT 160°	1
	REC35-06004		FILTRO ACEITE	OIL FILTER	FILTRO OLIO	FILTRE D'HUILE	1
	REC35-06003		FILTRO ACEITE (filtro remoto)	OIL FILTER (remote filter)	FILTRO OLIO (filtro remoto)	FILTRE D'HUILE (filter à distance)	1
	REC35-802893Q01		FILTRO GASOLINA	FUEL FILTER	FILTRO BENZINA	FILTRE D'ESSENCE	1
	REC25W40U3		ACEITE MOTOR	OIL	OLIO MOTORE	HUILE MOTEUR	2
4.3L & LX (GEN +) (1996-98) (0F803000 - 0M614999)	NGKBR6FS		BUJIA	SPARK PLUG	CANDELE	BOUGIE	6
	REC8M0089715		TERMOSTATO 140°	THERMOSTAT 140°	TERMOSTATO 140°	THERMOSTAT 140°	1
	REC8M0091470		TERMOSTATO 160°	THERMOSTAT 160°	TERMOSTATO 160°	THERMOSTAT 160°	1
	REC35-06004		FILTRO ACEITE	OIL FILTER	FILTRO OLIO	FILTRE D'HUILE	1
	REC35-06003		FILTRO ACEITE (filtro remoto)	OIL FILTER (remote filter)	FILTRO OLIO (filtro remoto)	FILTRE D'HUILE (filter à distance)	1
	REC35-802893Q		FILTRO GASOLINA	FUEL FILTER	FILTRO BENZINA	FILTRE D'ESSENCE	1
	REC47-59362Q01	BRAVO	IMPULSOR	IMPELLER	GIRANTE	TURBINE	1
	REC25W40U3		ACEITE MOTOR	OIL	OLIO MOTORE	HUILE MOTEUR	1
		194	CORREAS	BELT	CINGHIE	COURROIES	
4.3L CARB. ALPHA/ BRAVO (0M61500+)	NGKBPR6EFS		BUJIA	SPARK PLUG	CANDELE	BOUGIE	6
	REC8M0089715		TERMOSTATO 140°	THERMOSTAT 140°	TERMOSTATO 140°	THERMOSTAT 140°	1
	REC8M0091470		TERMOSTATO 160°	THERMOSTAT 160°	TERMOSTATO 160°	THERMOSTAT 160°	1
	REC864493		TERMOSTATO 170° (enfriador cerrado)	THERMOSTAT 170° (closed cooling)	TERMOSTATO 170° (raffreddamento chiuso)	THERMOSTAT 170° (refroidisseur fermé)	1
	REC35-06004		FILTRO ACEITE	OIL FILTER	FILTRO OLIO	FILTRE D'HUILE	1
	REC35-06003		FILTRO ACEITE (filtro remoto)	OIL FILTER (remote filter)	FILTRO OLIO (filtro remoto)	FILTRE D'HUILE (filter à distance)	1
	REC35-802893Q01		FILTRO GASOLINA	FUEL FILTER	FILTRO BENZINA	FILTRE D'ESSENCE	1
	REC47-59362Q01	BRAVO	IMPELLER STD (enfriador)	IMPELLER STD (cooling)	GIRANTE STD (raffreddamento)	TURBINE STD (refroidisseur)	1
	REC47-862232A2	BRAVO	IMPELLER (enfriador cerrado)	IMPELLER (closed cooling)	GIRANTE (raffreddamento chiuso)	TURBINE (refroidisseur fermé)	1
	REC57-865615Q04	ALPHA	CORREA (dirección asistida)	BELT (power steering)	CINGHIA (servosterzo)	COURROIE (direction assistée)	1
	REC57-865615Q03	BRAVO	CORREA (dirección asistida)	BELT (power steering)	CINGHIA (servosterzo)	COURROIE (direction assistée)	1
	REC57-865615Q08	BRAVO	CORREA (dirección hidráulica compacta)	BELT (compact hydraulic steering)	CINGHIA (sterzo idraulico compatto)	COURROIE (direction hydraulique compacte)	1
	REC25W40U3		ACEITE MOTOR	OIL	OLIO MOTORE	HUILE MOTEUR	2

	REF						UN.
4.3L EFI (GEN+) TBI (0L619000-0L618999)	NGKBPR6EFS		BUJIA	SPARK PLUG	CANDELE	BOUGIE	
	REC8M0089715		TERMOSTATO 140º	THERMOSTAT 140º	TERMOSTATO 140º	THERMOSTAT 140º	
	REC8M0091470		TERMOSTATO 160º	THERMOSTAT 160º	TERMOSTATO 160º	THERMOSTAT 160º	
	REC35-06004		FILTRO ACEITE	OIL FILTER	FILTRO OLIO	FILTRE D'HUILE	
	REC35-06003		FILTRO ACEITE (filtro remoto)	OIL FILTER (remote filter)	FILTRO OLIO (filtro remoto)	FILTRE D'HUILE (filter à distance)	
	REC35-802893Q01		FILTRO GASOLINA	FUEL FILTER	FILTRO BENZINA	FILTRE D'ESSENCE	
	REC47-59362Q01	BRAVO	IMPULSOR	IMPELLER	GIRANTE	TURBINE	
	REC25W40U3		ACEITE MOTOR	OIL	OLIO MOTORE	HUILE MOTEUR	
		194	CORREAS	BELT	CINGHIE	COURROIES	
4.3L MPI ALPHA/ BRAVO & EC MODELS (ALL SERIES) (0M300000+)	NGKTR6IX		BUJIA	SPARK PLUG	CANDELE	BOUGIE	6
	REC8M0089715		TERMOSTATO 140º	THERMOSTAT 140º	TERMOSTATO 140º	THERMOSTAT 140º	1
	REC8M0091470		TERMOSTATO 160º	THERMOSTAT 160º	TERMOSTATO 160º	THERMOSTAT 160º	1
	REC864493		TERMOSTATO 170º (enfriador cerrado)	THERMOSTAT 170º (closed cooling)	TERMOSTATO 170º (raffreddamento chiuso)	THERMOSTAT 170º (refroidisseur fermé)	1
	REC35-06004		FILTRO ACEITE	OIL FILTER	FILTRO OLIO	FILTRE D'HUILE	1
	REC35-06003		FILTRO ACEITE (filtro remoto)	OIL FILTER (remote filter)	FILTRO OLIO (filtro remoto)	FILTRE D'HUILE (filter à distance)	1
	REC35-802893Q01		FILTRO GASOLINA	FUEL FILTER	FILTRO BENZINA	FILTRE D'ESSENCE	1
	REC47-862232A2	BRAVO	IMPULSOR	IMPELLER	GIRANTE	TURBINE	1
	REC25W40U3		ACEITE MOTOR	OIL	OLIO MOTORE	HUILE MOTEUR	2
		194	CORREAS	BELT	CINGHIE	COURROIES	
4.5L MPI ALPHA/ BRAVO (2A441953+)	NGKBPR5EFS-13		BUJIA	SPARK PLUG	CANDELE	BOUGIE	6
	REC864493		TERMOSTATO 170º (intercambiador de calor)	THERMOSTAT 170º (heat exchanger)	TERMOSTATO 170º (scambiatore di calore)	THERMOSTAT 170º (échangeur de chaleur)	1
	REC8M0089715		TERMOSTATO 140º	THERMOSTAT 140º	TERMOSTATO 140º	THERMOSTAT 140º	1
	REC35-06003		FILTRO ACEITE	OIL FILTER	FILTRO OLIO	FILTRE D'HUILE	1
	RAC31871		FILTRO GASOLINA	FUEL FILTER	FILTRO BENZINA	FILTRE D'ESSENCE	1
	REC47-862232A2	BRAVO	IMPULSOR	IMPELLER	GIRANTE	TURBINE	1
	REC25W40U3		ACEITE MOTOR	OIL	OLIO MOTORE	HUILE MOTEUR	2
5.0L (1988-95) (0B774445 - 0F600999)	NGKBR6FS		BUJIA	SPARK PLUG	CANDELE	BOUGIE	8
	REC8M0089715		TERMOSTATO 140º	THERMOSTAT 140º	TERMOSTATO 140º	THERMOSTAT 140º	1
	REC8M0091470		TERMOSTATO 160º	THERMOSTAT 160º	TERMOSTATO 160º	THERMOSTAT 160º	1
	REC35-06003		FILTRO ACEITE	OIL FILTER	FILTRO OLIO	FILTRE D'HUILE	1
	REC35-802893Q01		FILTRO GASOLINA	FUEL FILTER	FILTRO BENZINA	FILTRE D'ESSENCE	1
	REC47-59362Q01	BRAVO	IMPELLER (enfriador cerrado)	IMPELLER (closed cooling)	GIRANTE (raffreddamento chiuso)	TUBINE (refroidisseur fermé)	1
	REC57-13457Q	BRAVO	CORREA BOMBA DE AGUA	WATER PUMP BELT	CINGHIA POMPA DELL'ACQUA	COURROIE POMPE D'EAU	1
	REC57-34359		CORREA (dirección hidráulica)	BELT (hydraulic steering)	CINGHIA (sterzo idraulico)	COURROIE (direction hydraulique)	1
	REC3858462		CORREA ALTERN. (44")	ALTERNATOR BELT (44")	CINGHIA ALTERN. (44")	COURROIE ALTERN. (44")	1
	REC829207		CORREA ALTERN. (46")	ALTERNATOR BELT (46")	CINGHIA ALTERN. (46")	COURROIE ALTERN. (46")	1
	REC25W40U3		ACEITE MOTOR	OIL	OLIO MOTORE	HUILE MOTEUR	2
5.0L & 5.0L EFI (1998-01) (0L015751 - 0M599999)	NGKBPR6EFS		BUJIA	SPARK PLUG	CANDELE	BOUGIE	8
	REC8M0089715		TERMOSTATO 140º	THERMOSTAT 140º	TERMOSTATO 140º	THERMOSTAT 140º	1
	REC8M0091470		TERMOSTATO 160º	THERMOSTAT 160º	TERMOSTATO 160º	THERMOSTAT 160º	1
	REC99155T2		TERMOSTATO 170º (enfriador cerrado)	THERMOSTAT 170º (closed cooling)	TERMOSTATO 170º (raffreddamento chiuso)	THERMOSTAT 170º (refroidisseur fermé)	1
	REC35-06003		FILTRO ACEITE	OIL FILTER	FILTRO OLIO	FILTRE D'HUILE	1
	REC35-802893Q01		FILTRO GASOLINA	FUEL FILTER	FILTRO BENZINA	FILTRE D'ESSENCE	1
	REC47-59362Q01	BRAVO	IMPELLER	IMPELLER	GIRANTE	TURBINE	1
	REC25W40U3		ACEITE MOTOR	OIL	OLIO MOTORE	HUILE MOTEUR	2
		194	CORREAS	BELT	CINGHIE	COURROIES	
5.0L CARB. ALPHA/ BRAVO (0M600000+)	NGKBPR6EFS		BUJIA	SPARK PLUG	CANDELE	BOUGIE	8
	REC8M0089715		TERMOSTATO 140º	THERMOSTAT 140º	TERMOSTATO 140º	THERMOSTAT 140º	1
	REC8M0091470		TERMOSTATO 160º	THERMOSTAT 160º	TERMOSTATO 160º	THERMOSTAT 160º	1
	REC35-06003		FILTRO ACEITE	OIL FILTER	FILTRO OLIO	FILTRE D'HUILE	1
	REC35-802893Q		FILTRO GASOLINA	FUEL FILTER	FILTRO BENZINA	FILTRE D'ESSENCE	1
	REC47-59362Q01	BRAVO	IMPULSOR	IMPELLER	GIRANTE	TURBINE	1
	REC57-865615Q04	ALPHA	CORREA (dirección asistida)	BELT (power steering)	CINGHIA (servosterzo)	COURROIE (direction assistée)	1
	REC57-865615Q03	BRAVO	CORREA (dirección asistida)	BELT (power steering)	CINGHIA (servosterzo)	COURROIE (direction assistée)	1
	REC57-865615Q08	BRAVO	CORREA (sin dirección asistida)	BELT (without power steering)	CINGHIA (senza servosterzo)	COURROIE (sans direction assistée)	1
	REC25W40U3		ACEITE MOTOR	OIL	OLIO MOTORE	HUILE MOTEUR	2
5.0L MPI ALPHA/ BRAVO & EC (0M300000+)	NGKITR4A15		BUJIA	SPARK PLUG	CANDELE	BOUGIE	8
	REC8M0089715		TERMOSTATO 140º	THERMOSTAT 140º	TERMOSTATO 140º	THERMOSTAT 140º	1
	REC8M0091470		TERMOSTATO 160º	THERMOSTAT 160º	TERMOSTATO 160º	THERMOSTAT 160º	1
	REC99155T2		TERMOSTATO 160º (drenaje fálcil)	THERMOSTAT 160º (easy drain)	TERMOSTATO 160º (scarico facile)	THERMOSTAT 160º (vidange facile)	1
	REC864493		TERMOSTATO 170º (drenaje fálcil)	THERMOSTAT 170º (easy drain)	TERMOSTATO 170º (scarico facile)	THERMOSTAT 170º (vidange facile)	1
	REC35-06003		FILTRO ACEITE	OIL FILTER	FILTRO OLIO	FILTRE D'HUILE	1
	REC35-802893Q		FILTRO GASOLINA	FUEL FILTER	FILTRO BENZINA	FILTRE D'ESSENCE	1
	REC35-866171A01		FILTRO GASOLINA (módulo gasolina)	FUEL FILTER (fuel module)	FILTRO BENZINA (modulo benzina)	FILTRE D'ESSENCE (module à essence)	1
	REC35-892665		FILTRO GASOLINA (módulo gasolina)	FUEL FILTER (fuel module)	FILTRO BENZINA (modulo benzina)	FILTRE D'ESSENCE (module à essence)	1
	REC47-862232A2	BRAVO	IMPELLER	IMPELLER	GIRANTE	TURBINE	1
	REC25W40U3		ACEITE MOTOR	OIL	OLIO MOTORE	HUILE MOTEUR	2
		194	CORREAS	BELT	CINGHIE	COURROIES	

	REF						UN.
5.7L CARB. ALPHA/ BRAVO & LX/ EFI (1998+) (0B525982 +)	NGKBPR6EFS	(-0K999999)	BUJIA	SPARK PLUG	CANDELE	BOUGIE	8
	NGKBPR6EFS	(0L010037+)	BUJIA	SPARK PLUG	CANDELE	BOUGIE	8
	REC8M0089715		TERMOSTATO 140°	THERMOSTAT 140°	TERMOSTATO 140°	THERMOSTAT 140°	1
	REC8M0091470		TERMOSTATO 160°	THERMOSTAT 160°	TERMOSTATO 160°	THERMOSTAT 160°	1
	REC99155T2		TERMOSTATO (enfriador cerrado)	THERMOSTAT (closed cooling)	TERMOSTATO (raffreddamento chiuso)	THERMOSTAT (refroidisseur fermé)	1
	REC35-06003		FILTRO ACEITE	OIL FILTER	FILTRO OLIO	FILTRE D'HUILE	1
	REC35-802893Q		FILTRO GASOLINA	FUEL FILTER	FILTRO BENZINA	FILTRE D'ESSENCE	1
	REC47-59362Q01	BRAVO	IMPULSOR	IMPELLER	GIRANTE	TURBINE	1
	REC25W40U3		ACEITE MOTOR	OIL	OLIO MOTORE	HUILE MOTEUR	2
		194	CORREAS	BELT	CINGHIE	COURROIES	
350 MAG & 350 MAG EFI (GEN+) (1986+) (0A635178 - 0K999999)	NGKBR6FS		BUJIA	SPARK PLUG	CANDELE	BOUGIE	8
	NGKBPR6EFS	EFI	BUJIA	SPARK PLUG	CANDELE	BOUGIE	8
	REC35-802893Q		FILTRO GASOLINA	FUEL FILTER	FILTRO BENZINA	FILTRE D'ESSENCE	1
	REC65L-13915-00	EFI	FILTRO GASOLINA VST	FUEL FILTER VST	FILTRO BENZINA VST	FILTRE D'ESSENCE VST	1
	REC35-06003		FILTRO ACEITE	OIL FILTER	FILTRO OLIO	FILTRE D'HUILE	1
	REC8M0089715		TERMOSTATO 140°	THERMOSTAT 140°	TERMOSTATO 140°	THERMOSTAT 140°	1
	REC8M0091470		TERMOSTATO 160°	THERMOSTAT 160°	TERMOSTATO 160°	THERMOSTAT 160°	1
	REC47-59362Q01	BRAVO	IMPELLER	IMPELLER	GIRANTE	TURBINE	1
	REC25W40U3		ACEITE MOTOR	OIL	OLIO MOTORE	HUILE MOTEUR	2
		194	CORREAS	BELT	CINGHIE	COURROIES	
350 MAG/MPI (0F415189+)	NGKBPR6EFS	(-0F601999)	BUJIA	SPARK PLUG	CANDELE	BOUGIE	8
	NGKTR6IX	(0F602000 - 0M299999)	BUJIA	SPARK PLUG	CANDELE	BOUGIE	8
	NGKITR4A15	(0M300000+)	BUJIA	SPARK PLUG	CANDELE	BOUGIE	8
	REC35-802893Q		FILTRO GASOLINA	FUEL FILTER	FILTRO BENZINA	FILTRE D'ESSENCE	1
	REC65L-13915-00	(-0M299999)	FILTRO GASOLINA VST	FUEL FILTER VST	FILTRO BENZINA VST	FILTRE D'ESSENCE VST	1
	REC864572	(0M300000 - 0W059999)	FILTRO GASOLINA IN-LINE	FUEL FILTRO IN-LINE	FILTRO BENZINA IN-LINE	FILTRE D'ESSENCE IN-LINE	1
	REC35-866171A01	(0W060000+)	FILTRO GASOLINA VST	FUEL FILTER VST	FILTRO BENZINA VST	FILTRE D'ESSENCE VST	1
	REC35-892665	(0W060000+)	FILTRO GASOLINA VST	FUEL FILTER VST	FILTRO BENZINA VST	FILTRE D'ESSENCE VST	1
	REC35-06003		FILTRO ACEITE	OIL FILTER	FILTRO OLIO	FILTRE À HUILE	1
	REC47-59362Q01	BRAVO (-0M299999)	IMPULSOR	IMPELLER	GIRANTE	TURBINE	1
	REC47-862232A2	(0M300000+)	IMPULSOR	IMPELLER	GIRANTE	TURBINE	1
	REC8M0089715		TERMOSTATO 140°	THERMOSTAT 140°	TERMOSTATO 140°	THERMOSTAT 140°	1
	REC8M0091470		TERMOSTATO 160°	THERMOSTAT 160°	TERMOSTATO 160°	THERMOSTAT 160°	1
	REC99155T2		TERMOSTATO 160° (drenaje fálcil y enfriador cerrado)	THERMOSTAT 160° (easy drain & closing cooling)	TERMOSTATO 160° (scarico facile e raffreddamento chiuso)	THERMOSTAT 160° (vidange facile et refroidisseur fermé)	1
	REC25W40U3		ACEITE MOTOR	OIL	OLIO MOTORE	HUILE MOTEUR	2
		194	CORREAS	BELT	CINGHIE	COURROIES	
6.2L MPI & 377 MAG MPI (0L302200+)	NGKTR6IX	(0L302200 - 0M299999)	BUJIA	SPARK PLUG	CANDELE	BOUGIE	8
	NGKITR4A15	(0M310000+)	BUJIA	SPARK PLUG	CANDELE	BOUGIE	8
	NGKITR4A15	(0M300000+)	BUJIA	SPARK PLUG	CANDELE	BOUGIE	8
	REC35-802893Q		FILTRO GASOLINA	FUEL FILTER	FILTRO BENZINA	FILTRE D'ESSENCE	1
	REC864572	(0M311053+)	FILTRO GASOLINA IN-LINE	FUEL FILTRO IN-LINE	FILTRO BENZINA IN-LINE	FILTRE D'ESSENCE IN-LINE	1
	REC35-866171A01	(0M398395+)	FILTRO GASOLINA VST	FUEL FILTER VST	FILTRO BENZINA VST	FILTRE D'ESSENCE VST	1
	REC35-892665	(0M398395+)	FILTRO GASOLINA VST	FUEL FILTER VST	FILTRO BENZINA VST	FILTRE D'ESSENCE VST	1
	REC35-06003		FILTRO ACEITE	OIL FILTER	FILTRO OLIO	FILTRE À HUILE	1
	REC016940	HURT/ZEUS	FILTRO ACEITE TRANSMISIÓN	OIL FILTER TRANSMISSION	FILTRO OLIO TRASMISSIONE	FILTRE À HUILE DE TRANSMISSION	1
	REC47-59362Q01	(0L302200 - 0M299999)	IMPULSOR	IMPELLER	GIRANTE	TURBINE	1
	REC47-862232A2	(0M310000+	IMPULSOR	IMPELLER	GIRANTE	TURBINE	1
	REC8M0089715		TERMOSTATO 140°	THERMOSTAT 140°	TERMOSTATO 140°	THERMOSTAT 140°	1
	REC8M0091470		TERMOSTATO 160°	THERMOSTAT 160°	TERMOSTATO 160°	THERMOSTAT 160°	1
	REC99155T2	(-0M316999)	TERMOSTATO (drenaje fálcil y enfriador cerrado)	THERMOSTAT (easy drain & closing cooling)	TERMOSTATO (scarico facile e raffreddamento chiuso)	THERMOSTAT (vidange facile et refroidisseur fermé)	1
	REC864493	(0M317000+)	TERMOSTATO (drenaje fálcil y enfriador cerrado)	THERMOSTAT (easy drain & closing cooling)	TERMOSTATO (scarico facile e raffreddamento chiuso)	THERMOSTAT (vidange facile et refroidisseur fermé)	1
	REC25W40U3		ACEITE MOTOR	OIL	OLIO MOTORE	HUILE MOTEUR	2
		194	CORREAS	BELT	CINGHIE	COURROIES	
(1988+) (GEN V&VI) (0M771113 - 0M024330)	NGKBR6FS	(0K999999-)	BUJIA	SPARK PLUG	CANDELE	BOUGIE	8
	NGKBPR6EFS	(0L010003 - 0M024330)	BUJIA	SPARK PLUG	CANDELE	BOUGIE	8
	NGKBR6FVX	MPI HORIZON	BUJIA	SPARK PLUG	CANDELE	BOUGIE	8
	REC35-802893Q		FILTRO GASOLINA	FUEL FILTER	FILTRO BENZINA	FILTRE D'ESSENCE	1
	REC65L-13915-00	(0F602010+)	FILTRO GASOLINA VST	FUEL FILTER VST	FILTRO BENZINA VST	FILTRE D'ESSENCE VST	1
	REC35-06003		FILTRO ACEITE	OIL FILTER	FILTRO OLIO	FILTRE À HUILE	1
	REC016940	HURT/ZEUS	FILTRO ACEITE TRANSMISIÓN	OIL FILTER TRANSMISSION	FILTRO OLIO TRASMISSIONE	FILTRE À HUILE DE TRANSMISSION	1
	REC47-59362Q01		IMPELLER	IMPELLER	GIRANTE	TURBINE	1
	REC8M0089715		TERMOSTATO 140°	THERMOSTAT 140°	TERMOSTATO 140°	THERMOSTAT 140°	1
	REC8M0091470		TERMOSTATO 160°	THERMOSTAT 160°	TERMOSTATO 160°	THERMOSTAT 160°	1
	REC99155T2		TERMOSTATO (drenaje fálcil y enfriador cerrado)	THERMOSTAT (easy drain & closing cooling)	TERMOSTATO (scarico facile e raffreddamento chiuso)	THERMOSTAT (vidange facile et refroidisseur fermé)	1
	REC25W40U3		ACEITE MOTOR	OIL	OLIO MOTORE	HUILE MOTEUR	2
		194	CORREAS	BELT	CINGHIE	COURROIES	

GAS

	REF						UN.
8.1L (0M0206000+)	NGKTR55IX	(-2006)	BUJIA	SPARK PLUG	CANDELE	BOUGIE	8
	NGKIZFR7M	(2007+)	BUJIA	SPARK PLUG	CANDELE	BOUGIE	8
	REC35-802893Q		FILTRO GASOLINA	FUEL FILTER	FILTRO BENZINA	FILTRE D'ESSENCE	1
	REC35-866171A01		FILTRO GASOLINA VST	FUEL FILTER VST	FILTRO BENZINA VST	FILTRE D'ESSENCE VST	1
	REC35-892665		FILTRO GASOLINA VST	FUEL FILTER VST	FILTRO BENZINA VST	FILTRE D'ESSENCE VST	1
	REC35-06003		FILTRO ACEITE	OIL FILTER	FILTRO OLIO	FILTRE À HUILE	1
	REC016940	HURT/ZEUS	FILTRO ACEITE TRANSMISIÓN	OIL FILTER TRANSMISSION	FILTRO OLIO TRASMISSIONE	FILTRE À HUILE DE TRANSMISSION	1
	REC47-862232A2		IMPULSOR	IMPELLER	GIRANTE	TURBINE	1
	REC25W40U3		ACEITE MOTOR	OIL	OLIO MOTORE	HUILE MOTEUR	3
		194	CORREAS	BELT	CINGHIE	COURROIES	
8.2L (1A350802 - 2A041665)	NGKBPR6ES		BUJIA	SPARK PLUG	CANDELE	BOUGIE	8
	REC35-802893Q		FILTRO GASOLINA	FUEL FILTER	FILTRO BENZINA	FILTRE D'ESSENCE	1
	REC35-866171A01		FILTRO GASOLINA VST	FUEL FILTER VST	FILTRO BENZINA VST	FILTRE D'ESSENCE VST	1
	REC35-892665		FILTRO GASOLINA VST	FUEL FILTER VST	FILTRO BENZINA VST	FILTRE D'ESSENCE VST	1
	REC35-06003		FILTRO ACEITE	OIL FILTER	FILTRO OLIO	FILTRE À HUILE	1
	REC016940	HURT/ZEUS	FILTRO ACEITE TRANSMISIÓN	OIL FILTER TRANSMISSION	FILTRO OLIO TRASMISSIONE	FILTRE À HUILE DE TRANSMISSION	1
	REC47-862232A2		IMPULSOR	IMPELLER	GIRANTE	TURBINE	1
	REC25W40U3		ACEITE MOTOR	OIL	OLIO MOTORE	HUILE MOTEUR	3
		194	CORREAS	BELT	CINGHIE	COURROIES	

DIESEL

	REF						UN.
QSD 2.0 DIESEL	REC35-879172143		FILTRO AIRE	AIR FILTER	FILTRO ARIA	FILTRE D'AIR	
	REC35-879172104		FILTRO COMBUSTIBLE	DIESEL FILTER	FILTRO COMBUSTIBILE	FILTRE CARBURANT	
	REC879150054		TERMOSTATO	THERMOSTAT	TERMOSTATO	THERMOSTAT	
	REC57-879172120		CORREA	BELT	CINGHIE	COURROIE	
	TEN01320T		ANODO	ANODE	ANODO	ANODE	
	REC895207		FILTRO ACEITE (83mm)	OIL FILTER (83 mm)	FILTRO OLIO (83 mm)	FILTRE À HUILE (83 mm)	
	REC35-879312041		FILTRO ACEITE (67mm)	OIL FILTER (67 mm)	FILTRO OLIO (67 mm)	FILTRE À HUILE (67 mm)	
	REC15W40U3		ACEITE MOTOR	OIL	OLIO MOTORE	HUILE MOTEUR	
	JAB11979-0001	JABSCO	IMPULSOR	IMPELLER	GIRANTE	TURBINE	
	SHE10615K	SHERWOOD	IMPULSOR	IMPELLER	GIRANTE	TURBINE	
QSD 2.8 DIESEL	REC879172		FILTRO AIRE	AIR FILTER	FILTRO ARIA	FILTRE D'AIR	
	REC35-879172104		FILTRO COMBUSTIBLE	DIESEL FILTER	FILTRO COMBUSTIBILE	FILTRE CARBURANT	
	REC8M0093561		TERMOSTATO	THERMOSTAT	TERMOSTATO	THERMOSTAT	
	REC57-879194425		CORREA	BELT	CINGHIE	COURROIE	
	TEN01320T		ANODO	ANODE	ANODO	ANODE	
	REC895207		FILTRO ACEITE	OIL FILTER	FILTRO OLIO	FILTRE À HUILE	
	REC15W40U3		ACEITE MOTOR	OIL	OLIO MOTORE	HUILE MOTEUR	
	JAB11979-0001	JABSCO	IMPULSOR	IMPELLER	GIRANTE	TURBINE	
	SHE10615K	SHERWOOD	IMPULSOR	IMPELLER	GIRANTE	TURBINE	
QSD 4.2 DIESEL	REC35-898272048		FILTRO AIRE	AIR FILTER	FILTRO ARIA	FILTRE D'AIR	
	REC35-879172104		FILTRO COMBUSTIBLE	DIESEL FILTER	FILTRO COMBUSTIBILE	FILTRE CARBURANT	
	REC879150054		TERMOSTATO	THERMOSTAT	TERMOSTATO	THERMOSTAT	
	REC57-898101579		CORREA	BELT	CINGHIE	COURROIE	
	TEN01320T		ANODO	ANODE	ANODO	ANODE	
	REC895207		FILTRO ACEITE	OIL FILTER	FILTRO OLIO	FILTRE À HUILE	
	REC15W40U3		ACEITE MOTOR	OIL	OLIO MOTORE	HUILE MOTEUR	
	JAB17937-0001-P	JABSCO	IMPULSOR	IMPELLER	GIRANTE	TURBINE	
	SHE15000K	SHERWOOD	IMPULSOR	IMPELLER	GIRANTE	TURBINE	
3.0L V6 TDI DIESEL (TIER 3)	REC35-8M6002131		FILTRO AIRE	AIR FILTER	FILTRO ARIA	FILTRE D'AIR	
	REC35-8M0067337		FILTRO COMBUSTIBLE	DIESEL FILTER	FILTRO COMBUSTIBILE	FILTRE CARBURANT	
	RECGS01030		FILTRO COMBUSTIBLE	DIESEL FILTER	FILTRO COMBUSTIBILE	FILTRE CARBURANT	
	REC8M0093480		TERMOSTATO	THERMOSTAT	TERMOSTATO	THERMOSTAT	
	REC57-8M0093495	Alt+ P.Steering	CORREA	BELT	CINGHIE	COURROIE	
	REC8M6002274		ANODO	ANODE	ANODO	ANODE	
	REC35-8M0066483		FILTRO ACEITE	OIL FILTER	FILTRO OLIO	FILTRE À HUILE	
	JAB17018-0001		IMPULSOR	IMPELLER	GIRANTE	TURBINE	

KITS MANTENIMIENTO COLAS — DRIVES MAINTENANCE KIT — KIT MANUTENZIONE PIEDE — KITS D'ENTRETIEN DES EMBASSES



		REF					
ALPHA ONE GEN I	RECKITALPHAI	REC60932A4	FUELLE TRANSON	U-JOINT BELOW	MANICOTTO TRANSON	SOUFFLET TRANSOM	1
		REC54-815504320	ABRAZADERA INOX 32-50	HOSE CLAMP 32-50	FASCETTA INOX 32-50	COLLIER INOX 32-50	1
		REC47-89984Q5	KIT BOMBA AGUA	WATER PUMP KITS	KIT POMPA ACQUA	KIT POMPE À EAU	1
		RECKITMALPHA1AL	KIT ÁNODOS	ANODES KIT	KIT ANODI	KIT ANODES	1
		REC12-191833	JUNTA	GASKET	GUARNIZIONE	JOINT	2
		REC26-455771	RETÉN	SEAL	PARAOLIO	JOINT SPI	1
		REC18654A1	FUELLE ESCAPE	EXHAUST BELOW	MANICOTTO SCARICO	SOUFFLET ECHAPPEMENT	1
		REC27-94996Q2	KIT DE JUNTAS	GASKET KIT	KIT GUARNIZIONE	KIT JOINTS	1
ALPHA ONE GEN II	RECKITGENEII	REC816431A1	FUELLE TRANSON	U-JOINT BELOW	MANICOTTO TRANSON	SOUFFLET TRANSOM	1
		REC54-815504320	ABRAZADERA INOX 32-50	HOSE CLAMP 32-50	FASCETTA INOX 32-50	COLLIER INOX 32-50	1
		REC12-191833	JUNTA	GASKET	GUARNIZIONE	JOINT	2
		REC26-455771	RETÉN	SEAL	PARAOLIO	JOINT SPI	1
		RECKITMALPHA2AL	KIT ÁNODOS	ANODES KIT	KIT ANODI	KIT ANODES	1
		REC47-43026Q06	KIT BOMBA AGUA	WATER PUMP KITS	KIT POMPA ACQUA	KIT POMPE À EAU	1
		REC53-815949	CIERRE METALICO	E-RING	CHIUSURA METALLICO	E-CLIP	2
		REC18654A1	FUELLE ESCAPE	EXHAUST BELOW	MANICOTTO SCARICO	SOUFFLET ECHAPPEMENT	1
		REC27-94996Q2	KIT DE JUNTAS	GASKET KIT	KIT GUARNIZIONE	KIT JOINTS	1
BRAVO	RECKITBRAVO	REC86840A05	FUELLE TRANSON	U-JOINT BELOW	MANICOTTO TRANSON	SOUFFLET TRANSOM	1
		REC54-815504320	ABRAZADERA INOX 32-50	HOSE CLAMP 32-50	FASCETTA INOX 32-50	COLLIER INOX 32-50	1
		REC12-191833	JUNTA	GASKET	GUARNIZIONE	JOINT	2
		REC16755Q1	KIT DE JUNTAS	GASKET KIT	KIT GUARNIZIONE	KIT JOINTS	1
		RECKITMBRAVO3AL	KIT ÁNODOS	ANODES KIT	KIT ANODI	KIT ANODES	1
		CM806188A	ÁNODO AL	ANODE AL	ANODO AL	ANODE AL	1
		REC18654A1	FUELLE ESCAPE	EXHAUST BELOW	MANICOTTO SCARICO	SOUFFLET ECHAPPEMENT	1

GUÍA MANTENIMIENTO TRASMISIONES — GUIDE MAINTENANCE TRANSMISSIONS — GUIDA MANUTENZIONE TRASMISSIONI — GUIDE MAINTENANCE TRANSMISSIONS



	REF					
TR/TRS (1977-93) (4794900+)	REC27-54014Q1	KIT JUNTAS TRANSOM	TRANSOM GASKET KIT	KIT GUARNIZIONE TRANSOM	KIT JOINT TRANSOM	1
	REC60932A4	FUELLE TRANSMISION	TRASMISSION BELLOW	CUFFIA TRASMISSIONE	SOUFFLET CARDAN	1
	REC10-79953Q04	TAPON DE NIVEL ACEITE	OIL LEVEL CAP	TAPPO LIVELLO OLIO	BOUCHON DE NIVEAU D'HUILE	1
	REC10-79953Q04	TAPON DRENAJE ACEITE	OIL DRAIN CAP	TAPPO SCARICO OLIO	BOUCHON VIDANGE	1
	REC31640Q4AL	ANODO TIMON	RUDDER ANODE	ANODO TIMONE	ANODE DE TIMON	1
	REC80W90U6	ACEITE SINTETICO 80W-90	SYNTHETIC OIL 80W-90	OLIO SINTETICO 80W-90	HUILE SYNTHÉTIQUE 80W-90	2
R/ MR/ ALPHA ONE (1983-90) (6216687 - 0F386995)	REC27-94996Q2	KIT JUNTAS TRANSOM	TRANSOM GASKET KIT	KIT GUARNIZIONE TRANSOM	KIT JOINT TRANSOM	1
	REC30-879194A01	RODAMIENTO TRANSOM	TRANSOM BEARING	CUSCINETTO TRANSOM	ROULEMENT TRANSOM	1
	REC60932A4	FUELLE TRANSMISION	TRASMISSION BELLOW	CUFFIA TRASMISSIONE	SOUFFLET CARDAN	1
	REC18654A1	FUELLE ESCAPE	EXHAUST BELLOW	CUFFIA DI SCARICO	SOUFFLET ECHAPPEMENT	1
	REC78458A1	FUELLE ESCAPE TUBO (454 MAG)	EXHAUST BELLOW TUBE (454 MAG)	CUFFIA DI SCARICO TUBO (454 MAG)	SOUFFLET ECHAPPEMENT TUBE (454 MAG)	1
	REC74639Q02	FUELLE CABLE CAMBIO	SHIFT WIRE BELLOW	CUFFIA CAVO CAMBIO	SOUFFLET CÂBLE CHANGEMENT	1
	REC10-79953Q04	TAPON DE NIVEL ACEITE	OIL LEVEL CAP	TAPPO LIVELLO OLIO	BOUCHON DE NIVEAU D'HUILE	1
	REC22-67892A05	TAPON DERENAJE ACEITE	OIL DRAIN CAP	TAPPO SCARICO OLIO	BOUCHON VIDANGE	1
	REC31640Q4AL	ANODO TIMON (2-3/8")	RUDDER ANODE (2-3/8")	ANODO TIMONE (2-3/8")	ANODE DE TIMON (2-3/8")	1
	REC55989Q9AL	ANODO TIMON (4")	RUDDER ANODE (4")	ANODO TIMONE (4")	ANODE DE TIMON (4")	1
	REC55989Q9AL	ANODO BOLA TRANSOM	BALL ANODE TRANSOM	ANODO BOLLA TRANSOM	ANODE BALL TRANSOM	1
	REC821631Q1AL	ANODO TRANSOM (MERCAT)	TRANSOM ANODE (MERCAT)	ANODO TRANSOM (MERCAT)	ANODE TRANSOM (MERCAT)	1
	CM43994	ANODO TRANSOM (MERCAT) ANTIGUO	TRANSOM ANODE (MERCAT) OLD	ANODO TRANSOM (MERCAT) VECCHIO	ANODE TRANSOM (MERCAT) ANCIEN	1
	RECKITMALPHA1AL	KIT ANODOS	ANODE KIT	KIT ANODI	KIT ANODES	1
	REC32-32461	TUBO AGUA 5/8" TRANSOM	WATER TUBE 5/8" TRANSOM	TUBO ACQUA 5/8" TRANSOM	TUBE D'EAU 5/8" TRANSOM	1
	REC32-4172533	TUBO AGUA 3/4" TRANSOM	WATER TUBE 3/4" TRANSOM	TUBO ACQUA 3/4" TRANSOM	TUBE D'EAU 3/4" TRANSOM	1
	REC47-89984T4	IMULSOR	IMPELLER	GIRANTE	TURBINE	1
	REC47-89984Q5	KIT BOMBA DE AGUA	WATER PUMP KIT	KIT POMPA ACQUA	KIT POMPE À EAU	1
	REC865436A03	KIT CABLE CAMBIO	SHIFT WIRE KIT	KIT CAVO CAMBIO	KIT CÂBLE CHANGEMENT	1
	REC805320A03	KIT SENSORES TRIM	SENSOR TRIM KIT	KIT SENSORI TRIM	KIT SONDES TRIM	1
	REC80W90U6	ACEITE SINTETICO 80W-90	SYNTHETIC OIL 80W-90	OLIO SINTETICO 80W-90	HUILE SYNTHÉTIQUE 80W-90	2

	REF					
APLHA ONE (GENII) (1991+) (0D469259+)	REC27-94996Q2	KIT JUNTAS TRANSOM	TRANSOM GASKET KIT	KIT GUARNIZIONE TRANSOM	KIT JOINTS TRANSOM	1
	REC30-879194A01	RODAMIENTO TRANSOM	TRANSOM BEARING	CUSCINETTO TRANSOM	ROULEMENT TRANSOM	1
	REC816431A1	FUELLE TRANSMISION	TRASMISSION BELLOW	CUFFIA TRASMISSIONE	SOUFFLET TRANSMISSION	1
	REC18654A1	FUELLE ESCAPE	EXHAUST BELLOW	CUFFIA DI SCARICO	SOUFFLET ECHAPPEMENT	1
	REC74639Q02	FUELLE CABLE CAMBIO	SHIFT WIRE BELLOW	CUFFIA CAVO CAMBIO	SOUFFLET CÂBLE CHANGEMENT	1
	REC10-79953Q04	TAPON DE NIVEL ACEITE	OIL LEVEL CAP	TAPPO LIVELLO OLIO	BOUCHON DE NIVEAU D'HUILE	1
	REC22-67892A05	TAPON DERENAJE ACEITE	OIL DRAIN CAP	TAPPO SCARICO OLIO	BOUCHON VIDANGE	1
	CM821629	ANODO PLACA	PLATE ANODE	ANODO PIASTRA	ANODE PLAQUE	1
	REC821631Q1AL	ANODO TRANSOM (MERCAT)	TRANSOM ANODE (MERCAT)	ANODO TRANSOM (MERCAT)	ANODE TRANSOM (MERCAT)	1
	REC76214Q5AL	ANODO TIMON (plano)	RUDDER ANODE (flat)	ANODO TIMONE (plano)	ANODE TIMON (plane)	1
	CM46399	ANODO TIMON (aleta)	RUDDER ANODE (flap)	ANODO TIMONE (flap)	ANODE TIMON (flap)	1
	REC806105Q1AL	ANODO HELICE (CARRIER)	PROPELLER ANODE (CARRIER)	ANODO ELICA (CARRIER)	ANODE HELICE (CARRIER)	1
	REC806189Q1AL	ANODO BRAZO TRIM	TRIM ARM ANODE	ANODO BRACCIO TRIM	ANODE ARM TRIM	2
	RECKITMALPHA2AL	KIT ANODOS	ANODE KIT	KIT ANODI	KIT ANODES	1
	REC32-4172533	TUBO AGUA TRANSOM	WATER TUBE TRANSOM	TUBO ACQUA TRANSOM	TUBE À EAU TRANSOM	1
	REC47-43026Q02	IMPULSOR	IMPELLER	GIRANTE	TURBINE	1
	REC817275Q05	KIT BOMBA DE AGUA	WATER PUMP KIT	KIT POMPA ACQUA	KIT POMPE À EAU	1
	REC865436A03	KIT CABLE CAMBIO	SHIFT WIRE KIT	KIT CAVO CAMBIO	KTI CÂBLE CHANGEMENT	1
	REC805320A03	KIT SENSORES TRIM	SENSOR TRIM KIT	KIT SENSORI TRIM	KIT SONDE TRIM	1
	REC80W90U6	ACEITE SINTETICO 80W-90	SYNTHETIC OIL 80W-90	OLIO SINTETICO 80W-90	HUILE SYNTHÉTIQUE 80W-90	2
BRAVO I / II & III	REC16755Q1	KIT JUNTAS TRANSOM	TRANSOM GASKET KIT	KIT GUARNIZIONE TRANSOM	KIT JOINTS TRANSOM	1
	REC30-879194A01	RODAMIENTO TRANSOM	TRANSOM BEARING	CUSCINETTO TRANSOM	ROULEMENT TRANSOM	1
	REC86840A05	FUELLE TRANSMISION	TRASMISSION BELLOW	CUFFIA TRASMISSIONE	SOUFFLET TRANSMISSION	1
	REC18654A1	FUELLE ESCAPE	EXHAUST BELLOW	CUFFIA DI SCARICO	SOUFFLET ECHAPPEMENT	1
	REC78458A1	FUELLE ESCAPE COLECTOR	EXHAUST BELLOW	CUFFIA SCARICO COLLETTORE	SOUFFLET D'ECHAPPEMENT	1
	REC74639Q02	FUELLE CABLE CAMBIO	SHIFT WIRE BELLOW	CUFFIA CAVO CAMBIO	SOUFFLET CÂBLE CHANGEMENT	1
	REC22-67892A05	TAPON DE NIVEL ACEITE	OIL LEVEL CAP	TAPPO LIVELLO OLIO	BOUCHON DE NIVEAU D'HUILE	1
	REC22-67892A05	TAPON DERENAJE ACEITE	OIL DRAIN CAP	TAPPO SCARICO OLIO	BOUCHON VIDANGE	1
	CM821630	ANODO PLACA	PLATE ANODE	ANODO PIASTRA	ANODE PLAQUE	1
	CM43994	ANODO TRANSOM (MERCAT)	TRANSOM ANODE (MERCAT)	ANODO TRANSOM (MERCAT)	ANODE TRANSOM (MERCAT)	1
	CM76214Q5	ANODO TIMON (Plano con rosca)	RUDDER ANODE (flat with thread)	ANODO TIMONE (plano con filo)	ANODE TIMON (plane avec filet)	1
	CM762144	ANODO TIMON (plano sin rosca)	RUDDER ANODE (flat without thread)	ANODO TIMONE (plano senza filo)	ANODE TIMON (plane sans filet)	1
	CM806188	ANODO HELICE (CARRIER)	PROPELLER ANODE (CARRIER)	ANODO ELICA (CARRIER)	ANODO HELICE (CARRIER)	1
	CM865182CZ	ANODO EJE HELICE (BRAVO III 2004+)	SHAFT PROPELLER ANODE (BRAVO III 2004+)	ANODO ASSE ELICA (BRAVO III 2004+)	ANODO ARBRE D'HÉLICE (BRAVO III 2004+)	1
	CM806190	ANODO BRAZO TRIM	TRIM ARM ANODE	ANODO BRACCIO TRIM	ANODE ARM TRIM	2
	REC55989Q9	ANODO BOLA TRANSOM	BALL ANODE TRANSOM	ANODO BOLLA TRANSOM	ANODE BALL TRANSOM	1
	RECKITMBRAVO1AL	KIT ANODOS BRAVO I	ANODE KIT BRAVO I	KIT ANODI BRAVO I	KIT ANODES BRAVO I	1
	RECKITMBRAVO23AL	KIT ANODOS BRAVO II	ANODE KIT BRAVO II	KIT ANODI BRAVO II	KIT ANODES BRAVO II	1
	RECKITMBRAVO3AL	KIT ANODOS BRAVO III	ANODE KIT BRAVO III	KIT ANODI BRAVO III	KIT ANODES BRAVO III	1
	REC32-43437	TUBO AGUA TRANSOM (BRAVO I)	WATER TUBE TRANSOM (BRAVO I)	TUBO ACQUA TRANSOM (BRAVO 1)	TUAYU À EAU TRANSOM (BRAVO I)	1
	REC815471T1	KIT CABLE CAMBIO	SHIFT WIRE KIT	KIT CAVO CAMBIO	KIT CÂBLE CHANGEMENT	1
	REC805320A03	KIT SENSORES TRIM	SENSOR TRIM KIT	KIT SENSORI TRIM	KIT SONDES TRIM	1
	REC80W90U6	ACEITE SINTETICO 80W-90	SYNTHETIC OIL 80W-90	OLIO SINTETICO 80W-90	HUILE SYNTHÉTIQUE 80W-90	3

MATERIALES GENÉRICOS PARA REVISIÓN — GENERIC MATERIALS FOR REVISION — MATERIALE GENERICO PER LA REVISIONE — MATÉRIAUX GÉNÉRIQUES POUR L'EXAMEN

REF				
GS90002	PINTURA NEGRA MERCRUISER EN SPRAY	BLACK PAINT MERCRUISER SPRAY	PITTURA NERA MERCRUISER. SPRAY	PEINTURE EN SPRAY NOIRE
GS90012	SPRAY IMPRIMACION PARA MOTORES	SPRAY PRIMER FOR ENGINES	PRIMER PER MOTORI. SPRAY	PRIMER POUR MOTEUR
GS90019	BARNIZ TRANSPARENTE PROTECTOR PINTURA EN SPRAY	CLEAR VARNISH, SPRAY PAINT PROTECTOR	VERNICE TRASPARENTE, PROTETTORE DI PITTURA. SPRAY	VERNIS TRANSPARENT, PROTECTEUR EN SPRAY
GS90090	PROTECTOR OXIDO MOTOR EN SPRAY	SPRAY ENGINE PROTECTOR FROM RUST	PROTETTORE MOTORE DALL'OSSIDAZIONE. SPRAY	PROTECTEUR MOTEUR DE L'OXYDATION EN SPRAY
GS90092	PROTECTOR DIELECTRICO EN SPRAY	SPRAY DIELECTRIC PROTECTOR	PROTETTORE DIELETTRICO. SPRAY	PROTECTEUR DIELECTRIQUE EN SPRAY
RECGREU1	BOTE GRASA MARINA 450 g	MARINE GREASE 450 g	GRASSO MARINO 450 g	GRAISSE MARINE 450g

SISTEMA DE ALIMENTACIÓN Y FILTRACIÓN
FUEL & FILTRATION SYSTEM
SISTEMA DI ALIMENTAZIONE E FILTRAZIONE
SYSTÈME D'ALIMENTATION ET DE FILTRATION

FILTRO DE COMBUSTIBLE Y ELEMENTOS | FUEL FILTERS AND ELEMENTS | FILTRI BENZINA E RACCORDI | FILTRE A ESSENCE ET CARTOUCHE DE RECHANGE

MOTORES GASOLINA | GAS ENGINE | MOTORI BENZINA | MOTEUR ESSENCE

GAS

BRACKET | BRACKET | SUPPORTO | TÊTE DE FILTRE À ESSENCE

Con 2 tapones de bronce y 2 tubos de extensión. (2 entradas y 2 salidas).

With 2 brass plugs and 2 extension tubes. (2 inputs & 2 outputs).

Con 2 tappi di bronzo e 2 tubi di estensione. (2 ingressi entrata carburante e 2 uscite carburante).

Avec 2 bouchons en bronze et 2 tubes d'extension. (2 entrées et 2 sorties).

REF		
REC25000	1/4"	AL
REC25010	1/4"	INOX /SS AISI316
REC25020	3/8"	AL
REC25030	3/8"	INOX /SS AISI316
RECOBBRACKET	1/4"	Plast.

RECmar





REC25000 - REC25020



REC25010 - REC25030



RECOBBRACKET

FILTRO COMBUSTIBLE SEPARADOR DE AGUA | WATER SEPARATING FUEL FILTER | FILTRO SEPARATORE ACQUA-BENZINA | FILTRE À ESSENCE

REF	MICRON	
REC24942	10	$4^{7/16}$" = 11 cm
REC35-802893Q01	10	$3^{3/4}$"
REC855686	28	$4^{7/16}$"
REC35-802893Q	25	$3^{3/4}$"
RACPFF5510	10	$4^{7/16}$"

RACOR



RACPFF5510

RECmar



REC24942



REC35-802893Q01



REC855686



REC35-802893Q

REF	R.O./OEM		
RM35-866594Q01	35-866594Q01 35-866594K01	100VAZER, 100VAZER EC	3.0L MPI EC

RECmar



Filtro original.

OEM filter.

Filtro benzina originale.

Filtre à essence original

REF	MICRON	
RM35-802893Q	10	$3^{3/4}$"

QUICKSILVER



FILTRO CON BRACKET | OEM FILTER WITH BRACKET | FILTRO BENZINA CON SUPPORTO | FILTRE A ESSENCE AVEC SUPPORT

Con 2 tapones de bronce y 1 tubo de extensión.

With 2 brass plugs & 1 extension tube.

Con 2 tappi di bronzo e 1 tubo di estensione.

avec 2 bouchons en bronze et 1 tube d'extension

REF	MICRON			BRACKET
REC24950	25	1/4"	50 GPH	AL
REC24952	10	1/4"	50 GPH	AL

RECmar



FILTRO DECANTADOR GASOLINA — COMPLETE FUEL FILTER — FILTRO DECANTATORE BENZINA — FILTRE DÉCANTEUR POUR ESSENCE

RACOR



				RAC120R-RAC-01	RAC320R-RAC-01	RAC320R-INOX-01	RAC320R-RAC-02
FLUJO MÁXIMO	MAX. FLOW	FLUSSO MASSIMO	FLUX MASSIMALE	114 l/h 30 gph	340 l/h 60 gph	340 l/h 60 gph	340 l/h 60 gph
ELEMENTO	ELEMENT	ELEMENTO	ÉLÉMENT	**RACS3240**	**RACS3213**	**RACS3213**	**RACS3220UL**
CAZOLETA TRANSPARENTE (sólo se recomienda para fueraborda.)	CLEAR BOWL (just for outboards)	VASCHETTA TRASPARENTE (solo nei fuoribordo.)	CAZOLETA TRANSPARENTE (uniquement recommandé pour le hors-bord.)	✔ PLAST.	✔ PLAST.	✔ PLAST.	✘ METAL.
ROSCAS CENTRALES	CENTRAL THREADS	FILETTO CENTRALE	FILS CENTRAUX	M18 x 1.5	1 1/4"	1 1/4"	1 1/4"
TAMAÑO ROSCA CABEZA	HEAD PORT SIZE	DIMENSIONE VITE TESTA	TAILLE DU FIL DE TÊTE	1/4-18 NPTF	1/4-18 NPTF	1/4-18 NPTF	1/4-18 NPTF
ALTURA X Ø	HEIGHT X Ø	ALTEZZA X Ø	HAUTEUR X Ø	166 x 81 mm	238 x 102 mm	238 x 102 mm	238 x 102 mm
PESO	WEIGHT	PESO	POIDS	0,5 kg	0,9 kg	0,9 kg	0,9 kg
CAIDA DE PRESIÓN	PRESSURE DROP	CADUTA DI PRESSIONE	CHUTE DE PRESSION	0.15 PSI 0.01 bar	0.61 PSI 0.04 bar	0.61 PSI 0.04 bar	0.61 PSI 0.04 bar
PRESIÓN MÁXIMA	MAX. PRESSURE	PRESSIONE MASSIMA	PRESSION MAXIMALE	7 PSI 0.05 bar	7 PSI 0.05 bar	7 PSI 0.05 bar	7 PSI 0.05 bar
DESMONTAJE CARTUCHO-CAZOLETA	ELEMENT REMOVAL UNDERBOWL	RIMOZIONE DELLA CARTUCCIA	DÉMONTAGE DE LA CARTOUCHE	25,4 mm 1"	25,4 mm 1"	25,4 mm 1"	25,4 mm 1"
TEMPERATURA DE TRABAJO	OPERATING TEMPERATURE	TEMPERATURA DI LAVORO	TEMPERATURE DE TRAVAIL	-40ºC +124ºC			

ELEMENTOS DE RECAMBIO — ELEMENT — ELEMENTI DI RICAMBIO — CARTOUCHE DE RECHANGE

REF	OEM	
RACS3240 **LENS3240**		RAC120R-RAC-01
RACS3227 **LENS3227**	35-886638	
RACS3213		RAC320R-RAC-01
LENS3213	35-809097	RAC320R-RAC-01 INOX RAC320R-RAC-03
RACS3214	35-809099	
RACS3228UL		RAC320R-RAC-02, bracket RACOR



LENS3240
LENS3227
LENS3214



RACS3240
RACS3227
RACS3214



RACS3228UL

RÁCORES DE LATÓN — BRASS RACORS — RACCORDI IN OTTONE — RACCORDS À LAITON

REF	OEM			
GS31066	22-89771Q2	1/4" NPT	5/16" = 7.9 mm	2
GS31067		1/4" NPT	3/8" = 9.5 mm	2
REC22-866725		3/4" NPT		

GOLDENSHIP



GS31066
GS31067

RECMAR



REC22-866725

REF			
GS31065	1/4" NPT	3/8" = 9.5 mm	1
GS31066	1/4" NPT	5/16" = 7.9 mm	2
GS31055	3/8" NPT	3/8" = 9.5 mm	2
GS31056	3/8" NPT	5/16" = 7.9 mm	2
GS31157	3/8" NPT	1/4" = 6.4 mm	2

GOLDENSHIP



FILTRO COMBUSTIBLE PARA MONTAJE EN LÍNEA — IN-LINE FUEL FILTER — FILTRO BENZINA PER MONTARE IN LINEA — FILTRE A ESSENCE EN LIGNE

REF			
GS31001	50 l/h	6-8 mm	plast.
GS31002	150 l/h	8-10 mm	

GOLDENSHIP



GS31001



GS31002

REF	OEM		
REC864572	864572 35-864572	3/8"	EFI & MPI, 8.1L & 496 CID (in-line) MPI & EFI (boost pump)

RECMAR



REF	OEM		
REC1397-8767Q	1397-8767Q 1397-8767 1397-8545		GM 2.5L/3.0L (6229718+) GM 5.0L/5.7L (6218462+) 205 (A331455+) 228 HP (6021784+) 330 HP (6083145+) GM 255 (590768+) 5.7L SKI 340, 230 & 260 inboards



REF	OEM		
REC35-8M0122423	35-884380T 35-8M0020349 35-8M0060041		MCM 4.5L (V6) 6.2L (V8)
RAC31871			



REF	OEM		
REC35-866171A01	35-866171A01	4 7/16"	5.0 - 350 - 6,2 & 8.1 MPI, MIE 496 MAG con módulo de bomba combustible with fuel pump module con modulo pompa combustibile avec module pompa d'essence



REF	OEM		
REC35-8M0046752	35-8M0046752 35-11004A1 35-803897Q1	4 7/16"	2.5L/3.0L (6229718+) MCM224 CID (6218037+) GM262 CID (A331455+) con carter de bomba combustible with carter fuel pump con carter pompa combustibile avec carter pompe d'essence



FILTRO DE GASOLINA CARBURADOR — CARBURETOR FUEL FILTER — FILTRO BENZINA CARBURATORE — FILTRE À ESSENCE CARBURATEUR

REF	OEM	
REC35-53336	35-53336Q 35-53336 3302-9033	GM INLINE 4 & 6 cyl FORD & GM V8 400 HP+ MERCRUISER 224 CID



REF	OEM	CARB.
REC93568	35-93568	ROCHESTER 2BBL & 4 BBL
REC35-49088A2	35-49088Q2 35-49088A2	4 &6 CYL INLINE
REC1397-2150	1397-2150	ROCHESTER



REC93568



REC35-49088A2





REC1397-2150

FILTRO VST — VST FILTER — FILTRO VST — FILTRE VST

REF	OEM	
REC65L-13915-00	808504 8085041 808504T1	262 MAG (TBI) GEN+ 350 MPI, TBI, EFI (1994-96) 454 EFI (GEN V) GM (1994-96) 454 EFI (SKI GEN V) GM (1995) 454 MAG BRAVO MPI (GEN VI) GM (1996-97) 5.7 EFI (TBI) GM 350 V8 (1995) 7.4L MIE MPI (LH) (GEN V) GM (1995-96) 7.4L MIE MPI (LH) (GEN VI) GM (1996-97) 7.4LX BRAVO MPI (GEN V) GM (1996) 7.4LX BRAVO MPI (GEN VI) GM (1996-97) 8.2L MIE MPI (LH) (GEN VI) GM (1996-97)



REF	OEM	
REC35-892665	35-892665	5.0 (350, 377, 383, 496) 6.2 & 8.1 MPI



FILTROS AIRE — AIR FILTER — FILTRI ARIA — FILTRE AIR

REF	OEM	
RM35-863829	35-863829	350 MAG 383 MAG 496 MAG 357 HRZ 4.3L MPI 5.0L MPI 6.2L MPI



REF	OEM	
RM35-8M2001030	35-8M2001030	350 MAG MPI 377 MAG MPI 4.3L MPI 5.0L MPI 5.7L MPI 6.2L MPI



FILTRO DE ACEITE — OIL FILTER — FILTRO OLIO — FILTRE A HUILE

REF	OEM		
RM35-883702Q	35-883702Q	18 mm x 1.5	V6 GM MCM V-6 *
RM35-866340Q02	35-866340Q03	13/16" x 16 NPT	GM 4 inline, V8 MCM / MIE GM V-6 *

* sin filtro de aceite remoto
* without oil remote filter
* senza filtro dell'olio remoto
* sans filtre à huile à distance



REF	OEM	
REC35-06004	35-883702Q	18 mm x 1.5 GM V6
REC35-06003	35-866340Q03	13/16" x 16 NPT GM 4 inline, V8
REC35-06007	35-802886Q 60565 35-8M0116378	3/4" x 16 NPT V8 Ford



new

REF	OEM	
REC3850559	35-16595Q	2006+ MCM HiPerformance GM V8



FILTRO ACEITE PARA DIRECCIÓN HIDRÁULICA AXIUS — HYDRAULIC OIL FILTER FOR AXIUS POWER STEERING — FILTRO OLIO PER MOTORI CON STERZZO IDRAULIC AXIUS — FILTRO D'HUILE POUR MOTEURS AVEC DIRECTION HYDRAULIQUE AXIUS

new

REF	OEM	
REC35-8M0138697	35-8M0138697 35-881132T	MCM AXIUS STEERING



GUÍA ACEITE | OIL GUIDE | GUIDA OLIO | GUIDE D'HUILE

MOD.		BASE	(l)	REF.
MCM 60	1965-68	Renault - L4	2,6	REC25W40U3
MCM 80	1966-69	Renault - L4	4,73	REC25W40U3
MCM 90	1970-72	Renault - L4	4,73	REC25W40U3
MCM 110/120/2.5L	1963-89	GM - L4	3,78	REC25W40U3
MCM140/3.0L/LX	1968+	GM - L4	3,78	REC25W40U3
MCM 470/165/170/3.7L	1976-89	Mercury - L4	5,2	REC25W40U3
MCM 485	1980-82	Mercury - L4	5,44	REC25W40U3
MCM 488/180/190/3.7LX	1983-89	Mercury - L4	6,15	REC25W40U3
MCM 140	1963	GM - L6	4,73	REC25W40U3
MCM 160/165	1967-81	GM - L6	4,73	REC25W40U3
MCM 200	1969	GM - L6	5,68	REC25W40U3
MCM 185 (4bbl)	1983-84	GM - V6	4,26	REC25W40U3
MCM 175/185/205	1985-87	GM - V6	4,26	REC25W40U3
MCM262 Mag EFI	1996-97	GM - V6	4,26	REC25W40U3
MCM 4.3L/LX/LH/LIIX & 262 Mag	1988-01	GM - V6	4,26	REC25W40U3
MCM 4.3L EFI	1998-01	GM - V6	4,26	REC25W40U3
MCM 4.3L & MPI	2002+	GM - V6	3,78	REC25W40U3
MCM 888	1971-77	Ford - V8	5,68	REC25W40U3
MCM/M1E 225	1973-74	Ford - V8	5,68	REC25W40U3
MCM/MTE 215	1970-72	Ford - V8	6,62	REC25W40U3
MCM 190	1963-64	GM - V8	4,73	REC25W40U3
MCM 898/200/5.0L	1977-95	GM - V8	4,73	REC25W40U3
MCM 228	1977-78	GM - V8	4,73	REC25W40U3
MCM 228/ 230/5.0LX	1979-95	GM - V8	5,2	REC25W40U3
MIE 198/228/230/5.0L	1977-88	GM - V8	5,68	REC25W40U3
MCM 5.0L & EFI	1998-02	GM - V8	5,2	REC25W40U3
MCM 5.0L & MPI	2002-up	GM - V8	4,26	REC25W40U3
MCM 225	1963-66	GM - V8	4,73	REC25W40U3
MCM 225/250	1967-69	GM - V8	6,62	REC25W40U3
MIE 225/250	1968	GM - V8	5,68	REC25W40U3
MCM 250/255	1975-77	GM - V8	4,73	REC25W40U3
MCM 260/5.7L/LX & EFI	1978-02	GM - V8	5,2	REC25W40U3
MCM 350 MAG, EFI, & MPI	1986-02	GM - V8	5,2	REC25W40U3
MCM 350 MAG & MPI	2002+	GM - V8	4,26	REC25W40U3
MCM 5.7L	2002+	GM - V8	4,26	REC25W40U3
MIE 255/260/5.7L	1975-93	GM - V8	5,68	REC25W40U3
MIE 5.7L & EFI	1993-97	GM - V8	3,78	REC25W40U3
MIE 5.7L/ 350 Mag MPI	1998-02	GM - V8	5,2	REC25W40U3
MIE 5.7L/ 350 Mag MPI	2002+	GM - V-8	4,26	REC25W40U3
MIE Ski 5.7L	1985-89	GM - V-8	3,78	REC25W40U3
MIE Ski 5.7L/350 Mag & MPI	1990-97	GM - V-8	4,73	REC25W40U3
MIE Ski 5.7L/350 Mag & MPI	1998-02	GM - V-8	5,2	REC25W40U3
MIE Ski 5.7L/350 Mag & MPI	2002+	GM - V-8	4,26	REC25W40U3
Black Scorpion Ski (Gen+)	1996-97	GM - V-8	4,73	REC25W40U3
Black Scorpion Ski (Gen+)	1998-01	GM - V-8	5,2	REC25W40U3
Black Scorpion Ski (Gen+)	2003+	GM - V-8	4,26	REC25W40U3
MX 6.2L MPI	2000-02	GM/Mercury - V-8	5,2	REC25W40U3
MX 6.2L MPI	2002+	GM/Mercury - V-8	4,26	REC25W40U3
MX 6.2L MPI MIE	1999-02	GM/Mercury - V-8	5,2	REC25W40U3
MX 6.2L MPI MIE & Ski	2002+	GM/Mercury - V-8	4,26	REC25W40U3
MX 6.2L Bik Scorpion Ski	2001-03	GM/Mercury - V-8	5,2	REC25W40U3
MX 6.2L Bik Scorpion Ski	2003+	GM/Mercury - V-8	4,26	REC25W40U3
MCM 233/255	1973-77	Ford - V-8	4,73	REC25W40U3
MIE 233/255 - V-Drive	1973-76	Ford - V-8	6,62	REC25W40U3
MCM 325	1969-72	GM - V8	7,57	REC25W40U3
MIE 325	1968-74	GM - V8	6,62	REC25W40U3
MCM 330	1977-81	GM - V8	5,68	REC25W40U3
MCM 330 & 454 Mag Alpha	1982-88	GM - V8	6,62	REC25W40U3
MCM 7.4L & 454 Mag	1988-91	GM - V8	7,57	REC25W40U3
MCM 7.4L/LX & 454 Mag, EFI & MPI	1992-01	GM - V8	6,62	REC25W40U3
MIE 330	1977-80	GM - V8	6,62	REC25W40U3
MIE 340/7.4 w/Borg Warner trans.	1981-92	GM - V8	6,62	REC25W40U3
MIE 7.4L w/Hurth trans.	1988-92	GM - V8	7,57	REC25W40U3
MIE 7.4L & 454 Mag MPI	1992-01	GM - V8	6,62	REC25W40U3
MIE Ski 454 Mag EFI & MPI	1995-97	GM - V8	6,62	REC25W40U3
MCM 390	1969-70	GM - V8	7,57	REC25W40U3
MIE 390	1969-70	GM - V8	6,62	REC25W40U3
MCM 496 Mag & HO	2001+	GM - V8	8,51	REC25W40U3
MIE 8.1 S Horizon & HO	2001+	GM - V8	8,51	REC25W40U3
MCM 502 Mag	1990-92	GM - V8	7,57	REC25W40U3
MCM 502 Mag, EFI & MPI	1992-01	GM - V8	6,62	REC25W40U3
MIE 8.2L	1990-96	GM - V8	7,57	REC25W40U3
MIE 8.2L	1996-06	GM - V8	6,62	REC25W40U3

FILTRO DE COMBUSTIBLE Y ELEMENTOS
FUEL FILTERS AND ELEMENTS
FILTRI BENZINA E RACCORDI
FILTRE A ESSENCE ET CARTOUCHE DE RECHANGE

MOTORES DIESEL
DIESEL ENGINE
MOTORI DIESEL
MOTEUR DIESEL

DIESEL

REF	OEM	
REC882376	882376	1.7DTI Original MS120



REF	OEM	
REC35-808275	35-808275	D7.3/270 Bravo & MIE Diesel (1994-96)



REF	OEM	
REC35-19486	35-19486 35-8M0103963	D254 D3.0L D3.6L D4.2L



REF	OEM	
REC35-807256	35-807256T	D3.0L D3.6L D7.3L D-Tronic CMD 2.8 CMD 4.2 D2.8L



new

REF	OEM	
REC35-8M0067337	35-8M0067337	MCM/MIE 1.9L, 2.5L, 3.0L V6 AMD V8 TDI



REF	OEM		
REC35-879172104	35-879172104	(MQSD MODELS) 2.0L, 2.8L, 4.2L base VM	



new

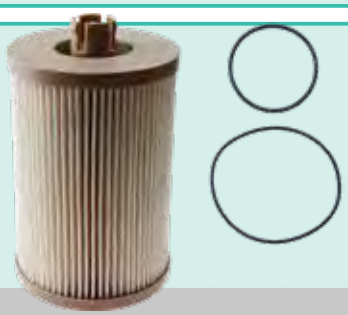

REF	OEM	MICRON	
REC35-8M6002390	35-8M6002390	2	MCM/MIE 4.2L V8 TDI 335 & 370 (CMC000200+)

FILTRO CON CAZOLETA · BOWL FILTERS · FILTRO CON COPPA · FILTRE AVEC COUPE

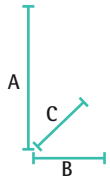



RACOR

	RAC500MA30	RAC900VMA	RAC900MA30	RAC1000VMA	RAC1000MA30	RAC75/500MAX	RAC75/1000MA30
	227 l/h 60 gph	340 l/h 90 gph	341 l/h 90 gph	681 l/h 180 gph	681 l/h 180 gph	454 l/h 120 gph	681 / 1363 l/h 180 / 360 gph
	2010	2010	2040	2010	2020	2010	2020
A X B X C	292 x 147 x 122 mm	432 x 220 x 200 mm	432 x 152 x 178 mm	557 x 220 x 200 mm	559 x 152 x 178 mm	292 x 368 x 241 mm	559 x 476 x 279 mm
	3/4"-16 UNF	7/8"-14 UNF	7/8"-14 UNF	7/8"-14 UNF	7/8"-14 UNF	3/4"-16 UNF	7/8"-14 UNF
KG	2 kg	4,9 kg	3 kg	5,6 kg	5 kg	7,7 kg	13,6 kg
CAIDA DE PRESIÓN PRESSURE DROP CADUTA DI PRESSIONE CHUTE DE PRESSION	0.61 PSI 0.04 bar	0.30 PSI 0.021 bar	0.34 PSI 0.02 bar	0.43 PSI 0.03 bar	0.49 PSI 0.03 bar	0.70 PSI 0.05 bar	3.70 PSI 0.25 bar
MAX	15 PSI 1 bar	15 PSI 1 bar	15 PSI 1 bar	15 PSI 1 bar	15 PSI 1 bar	15 PSI 1 bar	15 PSI 1 bar
MÁX.	102 mm	127 mm	127 mm	254 mm	254 mm	102 mm	254 mm

ELEMENTOS DE RECAMBIO · ELEMENTS · ELEMENTI DI RICAMBIO · CARTOUCHE DE RECHANGE

500	900	1000	MICRON	
RAC2010SM-OR	RAC2040SM-OR	RAC2020SM-OR	2	
RAC2010TM-OR	RAC2040TM-OR	RAC2020TM-OR	10	
RAC2010PM-OR	RAC2040PM-OR	RAC2020PM-OR	30	

RACOR



S: SECUNDARIO
T: PRIMARIO O SECUNDARIO/FINAL
P: PRIMARIO

S: SECONDARY FINAL
T: PRIMARY OR SECONDARY FINAL
P: PRIMARY

S: SECONDARIO
T: PRIMARIO O SECONDARIO
P: PRIMARIO

S: SECONDAIRE
T: PRIMAIRE OU SECONDAIRE
P: PRIMAIRE

new

REF	OEM		MICRON
REC3581760	3581760	R500MA	30
REC889419	889419	R900MA	
REC889422	889422	R1000MA	

RECMAR





REC3581760 REC889419 REC889422

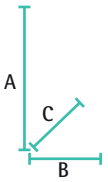

RACOR



				RAC120AS	RAC230R2	RAC245R2	RAC460R2	RAC490R2
FLUJO MÁXIMO	MAX. FLOW	FLUSSO MASSIMO	FLUX MAXIMUM	57 l/h 15 gph	114 l/h 30 gph	170 l/h 45 gph	227 l/h 60 gph	341 l/h 90 gph
ELEMENTO	ELEMENT	ELEMENTO	ÉLÉMENT	RACR12	RACR20	RACR25	RACR60	RACR90
DIESEL				✓	✓	✓	✓	✓
GAS				✓				
CAZOLETA TRANSPARENTE	CLEAR BOWL	VASCHETTA TRASPARENTE	BOL TRASPARENT	✓	✓	✓	✓	✓
INSTALACIÓN VACUÓMETRO	VACUUM INSTALLATION	INSTALLAZIONE VACUOMETRO	INSTALLATION VACUOMETRE	✓	✓	✓	✓	✓
INSTALACIÓN PRESIÓN	PRESSURE INSTALLATION	INSTALLAZIONE PRESSIONE	INSTALLATION PRESSION	✓	✓	✓	✓	✓
A X B X C (mm)				165 x 81 x 81	229 x 102 x 102	267 x 102 x 102	279 x 114 x 121	300 x 114 x 121
PESO	WEIGHT	PESO	POIDS	0,59 kg	0,90 kg	1 kg	1,3 kg	1,4 kg
CAIDA DE PRESIÓN	PRESSURE DROP	CADUTA DI PRESSIONE	CHUTE DE PRESSION	0.15 PSI 0.01 bar	0.31 PSI 0.02 bar	0.61 PSI 0.04 bar	0.39 PSI 0.03 bar	0.95 PSI 0.06 bar
PRESIÓN MÁXIMA	MAX. PRESSURE	PRESSIONE MASSIMA	PRESSION MAXIMALE	7 PSI	30 PSI	30 PSI	30 PSI	30 PSI
ENTRADA	IN	ENTRATA	ENTRÉE	1/4" NPT	1/4" NPT	1/4" NPT	3/8" NPT	3/8" NPT
BOMBA CEBADO (SÓLO PARA DIESEL)	PRIMER PUMP (ONLY DIESEL)	POMPA (SOLO PER DIESEL)	POMPE (SEULEMENT POUR DIESEL)	✘	✓	✓	✓	✓
Nº TOMAS	NUM. OF PORTS	N° FORI	N° D'ENTREE / SORTIE	4	3	3	4	4
TIPO DRENAJE	DRAIN TYPE	TIPO DRENAGGIO	TYPE DE DRAINAGE	Sello positivo | Positive seal | Tenuta positiva | Joint positif				
OPCIÓN SENSOR AGUA	WATER SENSOR OPTION	OPZIONE SENSORE ACQUA	OPTION SONDE DE PRESENCE D'EAU	✓	✓	✓	✓	✓

REF	MICROM
RACR11T	10



REF	MICROM
RACR24S	2
RACR24T	10
RACR24P	30



REF	MICROM
RACR60S	2
RACR60T	10
RACR60P	30



REF	MICROM
RACR12S	2
RACR12T	10
RACR12P	30



REF	MICROM
RACR25S	2
RACR25T	10
RACR25P	30



REF	MICROM
RACR90S	2
RACR90T	10
RACR90P	30



REF	MICROM
RACR20S	2
RACR20T	10
RACR20P	30



REF	MICROM
RACR26S	2
RACR26T	10
RACR26P	30



REF	MICROM
RACR120SM	2
RACR120TM	10
RACR120P	30



DIESEL

REF		
REC1140639	REC3581078	50 l/h

RECmar



GAS DIESEL

REF		
REC120	RACR12	15 l/h

RECmar



new



REF		MICROM		2 x 2 x
REC1766160	REC160ELEMENT	10	205-420 L/H (2.45PSI)	11/16" 10 mm

new



REF	OEM			
REC500MA	35-850481 35-850481A1	REC3581760	13 mm 10 mm	227 l/h

new



REF			
REC296TWIN	REC3581078	50 L/H	GS30432 (8mm) GS30433 (10 mm)

new



REF				CUBETA BOWL VASCHETTA SEAU
REC2656613	REC3581078	50 l/h	GS30432 (8mm) GS30433 (10 mm)	METAL.

new



REF			2 x 2 x
RECSWK-2000/10	RECGS01030	600 L/H	M22X1.5

new



REF			2 x 2 x
RECSWK-2000/5	RECGS00530	300 L/H	M16 X 1.5

RECAMBIOS MARINOS

FILTROS TIPO SEPAR 2000 FILTER TYPE SEPAR 2000 FILTRI DI TIPO SEPAR 2000 CARTOUCHE DE RECHANGE

REF	OEM	MICROM	(l/h)	(mm)	(mm)	(mm)
RECGS00530		10	300	75	24	75
RECGS01030	35-8M0067597	30	600	88	55	88
RECGS01830		30	1080	136	55	138

Recmar



RECGS00530



RECGS01030 RECGS01830

FILTROS AIRE AIR FILTER FILTRI ARIA FILTRE AIR

new

REF	OEM	
REC35-8M6002131	35-8M6002131	3.0L TDI 100/230/260 V6



new

REF	OEM	
REC35-879172143	35-879172143	CMD QSD 2.0 115/130/150/170



new

REF	OEM	
REC35-898272048	35-898272048	CMD QSD 4.2 270/320/350



new

REF	OEM	
REC879172	879172 896332162	CUMMINS CMD 2.8 ES, EFI



REF	OEM	
REC35-19487	35-19487	530D 636D D183 D219 D254 D7.3L

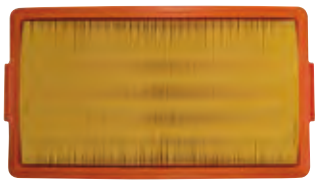

REF	OEM	
REC35-805312	35-805312	D2.8L D254 D4.2L CMD MODELS



FILTRO TRANSMISION HURTH | FILTRO TRANSMISION HURTH | FILTRO TRASMISSIONE HURTH | FILTRE TRANSMISSION HURT

REF	OEM	
REC016940	879194241 35-815419	Mercruiser V8 Hurth Transmision 8.1L & 8.2L Inboard ZEUS 3000

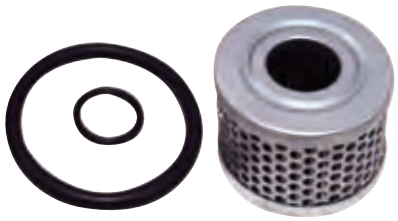

FILTRO DE ACEITE | OIL FILTER | FILTRO OLIO | FILTRE A HUILE

new



REF	OEM		Ø
REC35-879312041	35-879312041	(2008+) QSD 2.0 MCM ES 30 (88206399+) MCM ES 150 (88221799+) MCM ES 170 (88231000+) MIE EI 115 (88200499+) MIE EI 130 (88205099+) MIE EI 150 (88220299+) ME EI 170 (88230000+)	67 mm

new

REF	OEM	
REC35-8M0066483	35-8M0066483	3.0L V6 4.2L V8 TDI



REF	OEM		
REC3517857	35-803470 35-80470Q	3/4" x 16 NPT	60 & 80 HP (RENAULT)

Filtro corto
Short filter
Filtro corto
Filtre court



REF	OEM		
REC3850559	35-16595T1 35-16595Q 35-52731	13/16" x 16 NPT	230 CID, 250 CID 198 GM, 228 GM, 150 GM 330, 350, 370, 400, 420, 440, 460, 898

Filtro largo
Long filter
Filtro lungo
Filtre large



REF	OEM		
REC127695-35150	35-19485	530D, 636D D2.8L, D3.0L, D3.6L, D4.2L Motores VM engines	



REF	OEM	
REC35-805809	35-805809 35-805809T	D7.3L



REF	OEM	
REC35-816168	35-816168	D254, D3.0L, D3.6L, D4.2L



REF	OEM	
REC882687	882687 35-8M0150917	1.7DTS 120 diesel



REF	OEM	Ø	
REC895207	895207	3.25" (83 mm)	CUMMINS 2,8L CMD, QSD 2.0 / 2.8 / 4.2



GUÍA ACEITE — OIL GUIDE — GUIDA OLIO — GUIDE D'HUILE

DIESEL

MOD.			(l)	REF.
D1.7L DTI (Alpha)	2001+	1.7L	4,49	REC15W40U3
D2.8L D-Tronic (Bravo & MIE)	1997+	2.8L	8,04	REC15W40U3
D183 Turbo AC (Bravo & MIE)	1990-93	3.0L	8,99	REC15W40U3
530 D-TA (Bravo & MIE)	1989-93	3.0L	8,99	REC15W40U3
D3.0L (Bravo & MIE)	1994-97	3.0L	8,99	REC15W40U3
D219 Turbo AC (Bravo & MIE)	1990-93	3.6L	9,93	REC15W40U3
636 D-TA (Bravo & MIE)	1989-93	3.6L	9,93	REC15W40U3
D3.6L (Bravo & MIE)	1994-97	3.6L	9,93	REC15W40U3
D3.6L W (Bravo) (MCM)(Intl.)	1997	3.6L	9,93	REC15W40U3

MOD.			(l)	REF.
D254 Turbo AC (Bravo & MIE)	1990-93	4.2L	12,06	REC15W40U3
D4.2L (Bravo & MIE)	1994-97	4.2L	12,06	REC15W40U3
D4.2L D-Tronic (Bravo & MIE)	1997+	4.2L	12,06	REC15W40U3
D4.2L LD	1999+	4.2L	12,06	REC15W40U3
7.3L (Bravo & MIE)	1994-96	7.3L	11,35	REC15W40U3
D7.3L D-Tronic	1996-01	7.3L	15,61	REC15W40U3

RACORS — RACORS — RACCORDI — RACCORDS

DIESEL GAS

REF		
GS30430	8 mm	2
GS30431	10 mm	2

GOLDENSHIP



ORIENTABLES — GUIDEBLE — ORIENTABILE — ORIENTABLE

REF		
GS30432	8 mm	2
GS30433	10 mm	2

GOLDENSHIP



new

REF		
REC500MACON	500	3/8" = 10 mm



REF				
RAC1/2X16	1/2"	16 mm		1
RAC1/2X18	1/2"	18 mm		1
RAC1/2X20	1/2"	20 mm	500 900 1000	1
RAC3/8X10	3/8"	10 mm		1
RAC3/8X12	3/8"	12 mm		1
RAC3/8X14	3/8"	14 mm		1

RACOR



REF	NPT	NPT		
RAC1/2F-1/2M	7/8"	1/2"	900 1000	1
RAC3/8F-3/8M	3/4"	3/8"	500	1



REF	NPT		
BRA125-3/16x1/4	1/4"	3/16"	1
BRA125-1/4x1/2	1/2"	1/4"	1
BRA125-5/16x3/8	3/8"	5/16"	1
BRA125-3/8x3/8	3/8"	3/8"	1
BRA125-3/8x1/2	1/2"	3/8"	1
BRA125-1/2x3/8	3/8"	1/2"	1
BRA125-1/2x1/2	1/2"	1/2"	1
BRA125-1/2x3/4	3/4"	1/2"	1
BRA125-5/8x3/8	3/8"	5/8"	1
BRA125-5/8x3/4	3/4"	5/8"	1
BRA125-3/4x3/4	3/4"	3/4"	1
BRA125-1x3/4	3/4"	1"	1



ACCESORIOS PARA FILTROS | FILTER ACCESSORIES | ACCESSORI PER FILTRI | ACCESSORIES POUR FILTRES

LLAVES PARA FILTRO | FILTER KEY | CHIAVE DA FILTRO | CLÉ À FILTRE

REF
RACRK22628

RACOR



REF	
REC70720	65 - 110 mm

Recmar

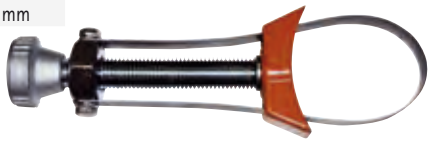

VÁLVULA DRENAJE AGUA DE FILTROS RACOR | DRAIN VALVE FOR RACOR FILTERS | VALVOLA DRENAGGIO ACQUA PER FILTRI RACOR | VANNE DE DRAINAGE D'EAU POUR FILTRE RACOR

REF
RACRK19492UL

RACOR



SENSOR DE AGUA PARA FILTROS DIESEL | WATER SENSOR FOR DIESEL FILTERS | SENSORE ACQUA PER FILTRI DIESEL | SONDE DE PRESENCE D'EAU POUR DIESEL

REF
RECRK21069

Recmar



RELOJ SENSOR DE AGUA | WATER ALARM | ALLARME SENSORE ACQUA | ALARME SENSOR D'EAU

REF
RACRK20726

RACOR



BOMBA DE COMBUSTIBLE FUEL PUMP POMPA COMBUSTIBILE POMPE À CARBURANT

BOMBA DE COMBUSTIBLE MECÁNICA FUEL PUMP MECHANICAL POMPA COMBUSTIBILE MECCANICA POMPE À CARBURANT MECANIQUE

REF	OEM			
REC862077A1	41141A2 862077A1	V6 231, 262, 229	REC35-8M0046752	REC27-34213

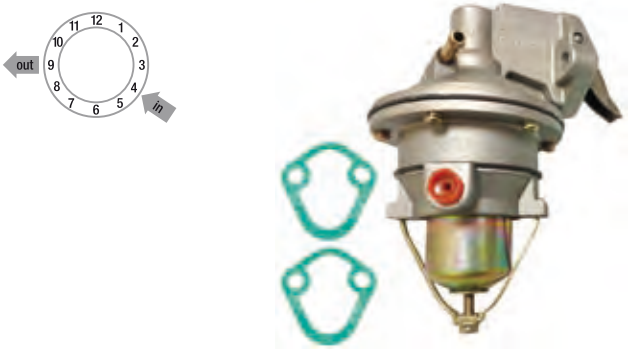

REF	OEM	
	62092T 62092 54552	Ford V8 302



REF	OEM	
REC862048A1	812454A1 812454A3 97399A2 862048A1 97399	V8 305, 350, 454, 330, 420 Inline (4 cyl) 120, 140, 3.0L & 224 CID



REF	OEM	
REC861677T	861677T 818383T	GM V8 (454 & 502)



REF	OEM	
REC86246T	86246T 86246 86246A1 78485 71646	V8 305, 350, 400, 228, 250, 255, 260, 280

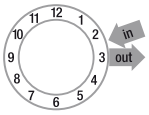



REF	OEM	
REC86247T	86247T 86247 86247A2 78820 63196 46860	V8 454 330, 325, 350, 390

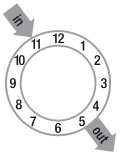



REF	OEM		
REC86234A4	86234A4 8623405 86234A3 86234 77594 71327 47585	GM (4 & 6 cyl) 153, 181, 225, 250, 120, 140, 160, 165, 470, 185, 488	REC35-49088A2

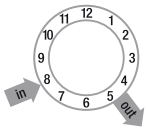



REF	OEM		
REC8M0073435	8M0073435 861676T09 861676A1 842725A3	GM 4 cyl (2.5 / 3.0L) MCM 3.7L 3.0L (SNL097000+)	REC35-8M0046752



REF	OEM	
REC8M0058164	8M0058164 97401	GM V8 305, 350, 228 / 230 / 260 / 898

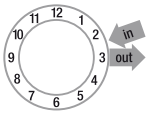



JUNTAS — GASKETS — GUARNIZIONI — JOINTS

REF	OEM
REC27-34213	27-34213
REC27-42457	27-42457
REC27-72805	27-72805
REC27-34898	27-34898


REC27-34213


REC27-42457


REC27-72805


REC27-34898

GUÍA BOMBAS MECÁNICAS — MECHANICAL PUMP GUIDE — GUIDA POMPI MECCANICHE — GUIDE DE POMPES MECANIQUES

MOD.	SERIAL	REF
120	1666601- 3377340	REC86234A4
120	-4469866	REC86234A4
120	4469866 - 4952700	REC86234A4
120	4952701	REC86234A4
120	5192049 - 6229717	REC86234A4
120/2.5L	6229718	REC86234A4
120/2.5L	6229718	REC8M0073435
140 (4 CYL.)	2508261 - 3332137	REC86234A4
140	-4460664	REC86234A4
140	4460665-4918569	REC86234A4
140	4918570	REC86234A4
140 (4 CYL.)	5157669 - 6229717	REC86234A4
140/3.0L	6229718	REC86234A4
140/3.0L	6229718	REC8M0073435
3.0L/3.0LX	C856559+	REC8M0073435
160	2048022 - 2770031	REC86234A4
165	4471566 - 4884834	REC86234A4
165	5178959	REC86234A4
165/3.7-LX (4 CIL.)	6916779	REC8M0073435
170 (4 CIL.)	6916779	REC8M0073435
180/3.7-LX (4 CIL.)	6916779	REC8M0073435
175/4.3L (262 CID)	B527955+	REC862077A1
185 (229 CID)	6330183	REC862077A1
185 (262 CID)	A331455+	REC862077A1
190 (4 CIL.)	6916779	REC8M0073435
200	2453769 - 2712072	REC86234A4
200 GM	6218462	REC8M0058164
200/5.0L GM	B525982+	REC8M0058164
205 (262 CID)	A331455+	REC862077A1

MOD.	SERIAL	REF
205/4.3L-LX (262 CID)	B527955+	REC862077A1
215 FORD	-3085036	REC62092T
215 FORD	3258182	REC62092T
225 FORD	3385721	REC62092T
228 GM	4765100 - 5170008	REC86246T
228 GM	5170009 - 6218461	REC86246T
228 GM	6218462	REC8M0058164
230 GM INBOARD	5907058	REC8M0058164
230/5.6L-GM (IB)	B522506+	REC8M0058164
230 GM	6218462	REC8M0058164
230/5.0L-LX GM	B525982+	REC8M0058164
233 FORD	4500860	REC62092T
255 GM	4768000 - 4908849	REC86246T
255 GM	3258728	REC62092T
260 GM	4175500 - 5195908	REC86246T
260 GM	5195909	REC86246T
260/5.7 GM	4908850 - 6218461	REC86246T
260 GM INTRABORDA	6218461	REC8M0058164
260/5.7L GM (IB)	B525982+	REC8M0058164
5.7L-GM	5907058	REC8M0058164
280 GM	5907058	REC8M0058164
300MR/TRS GM	F025000+	REC8M0058164
325-GM	4176250	REC86246T
330 GM	6668677	REC8M0058164
330 GM/W.B.W.	2278747 - 3640670	REC86247T
340/7.4L-GM (IB)	4623115	REC86247T
350 GM	6083145	REC862048A1
350-GM (MAGNUM)	5889914	REC862048A1
350 (MAG-TOURNEY SKI)	3780450	REC86247T

MOD.	SERIAL	REF
370 TRS-GM	A635178+	REC8M0058164
390-GM	D505450+	REC8M0058164
420-GM	6721528	REC862048A1
425-GM	2781129 - 2825059	REC86247T
454 GM (MAGNUM)	A398941+	REC862048A1
454 MAG. BRAVO GM	A398941+	REC862048A1
470	A631894 +	REC862048A1
470	B840126+	REC862048A1
470	-5097479	REC86234A4
470	5097480	REC86234A4
485	5520115 - 6218036	REC86234A4
488	6218037	REC86234A4

MOD.	SERIAL	REF
888 FORD	5685394	REC86234A4
898/198-GM	6170297	REC86234A4
898 GM	3108723	REC62092T
5.7 GM (SKI)	4762210 - 6218461	REC86246T
5.7 GM (SKI)	6218462	REC8M0058164
5.7L BRAVO (GM)350	A338553+	REC8M0058164
7.4L BRAVO GM	B514627+	REC8M0058164
7.4L W/HURTH (IB)	B525982+	REC8M0058164
7.4 BRAVO (GEN V)	B771113+	REC862048A1
7.4 BRAVO (GEN VI)	C391564+	REC862048A1
454 MAG BRAVO MPI (GEN VI) 1996-97		REC861677T

BOMBA DE COMBUSTIBLE ALTA PRESIÓN — HIGH PRESSURE FUEL PUMP — POMPA COMBUSTIBILE ALTA PRESSIONE — POMPE À CARBURANT HAUTE PRESSION

REF	OEM	
REC861156A1	861156A1	350 Mag M.P.I. Alpha/Bravo/Horizon/MIE/Ski 4.3L EFI/Gen+ TBI/M.P.I. Alpha/Bravo-454 Mag M.P.I. Bravo & Horizon 5.0/5.7L EFI/M.P.I. Alpha/Bravo-502 Mag M.P.I. 7.4L M.P.I. Bravo & MIE 8.1L/8.2L MIE M.P.I. MX6.2L M.P.I. Alpha/Bravo/Horizon & MIE Black Scorpion Scorpion 377 Stendrive Racing (Sin rosca) Reemplaza la bomba de combustible fría (Non threaded) Replaces cool fuel pump (Non filettato) Sostituisce la pompa del carburante fresco (Non fileté) Remplacement de la pompe à carburant froid



REF	OEM		
REC827682T	827682T 827682	262 MAG (TBI) (GEN+) 350 MAG EFI SKY (TBI) GM350 V-8 1994-1996 350MAG MPI SKY GM350 V-8 1995-1996 350 MAG ALPHA EFI (GEN+) GM350 V-8 1996 350 MAG BRAVO MPI GM350 V-8 1995 350 MAG BRAVO MPI (GEN+) GM350 V-8 1996 5.7L ALPHA EFI (TBI) GM350 V-8 1995 5.7L BRAVO (TBI) GM350 V-8 1995 5.7L EFI (2BBL-TBI) GM350 V-8 1996 5.7LX BRAVO EFI (GEN+) GM350 V-8 1996 5.7LX EFI (4BBL-TBI) GM350 V-8 1996	OF803800 - OK999999 OF215561 - OF820706 OF350583 - OF799999 OF800300 - OK001508 OF415189 - OF601999 OF602000 - OK001500 OF355305 - OF752389 OF225560 - OF752399 OF752400 - OK001505 OF800300 - OK001508 OF752400 - OK001505



new

REF	OEM	
REC8M0062770	8M0062770	4.5L MPI (2A456613+) 6.2L MPI (2A449153+)



REF	OEM	
REC866169T01	866169T01 866169A01	305, 350, 377, 496 5.0, 5.7, 6.2, 8.1, 8.2, 6.2L

GM V-8 con módulo de alta presión Gen III.
GM V-8 with Gen III cool fuel module high pressure.
GM V-8 con modulo di alta pressione Gen III.
GM V-8 avec module haute pression Gen III.



BOMBA DE COMBUSTIBLE BAJA PRESIÓN | LOW PRESSURE FUEL PUMP | POMPA COMBUSTIBILE BASSA PRESSIONE | POMPE À CARBURANT BASE PRESSION

REF	OEM	
CARP74021		12 Volt. 4-6PSI /20-30 GPH

Poseen todas las medidas de seguridad exigidas. Puede usarse para trasvase de gasoil.
Listed by Marine Division UL. Used for diesel fuel transfer
Conforme con tutte le misure di sicurezza necessarie. Si può utilizzare per travasi di gasolio.
Ils disposent de toutes les mesures de sécurité requises. Peut être utilisé pour le transfert de carburant diesel.



REF	OEM		
REC3858261	805656A2 805656A5 805025A2 861155A5 805656A6 861155A6	V6 - V8 (Modelo antiguo | Old Model | Modello vecchio | Ancien modèle) 4.3Fi & Carburated 1992-93 (Bomba en línea | Inline pump model | Pompa in linea | Bomba en línea)	8 PSI 25gpm



REF	OEM	
REC861155A6	861155A6 861155A5 805656A6 805656A2 805656A5 805025A2	4.3L V-6

Sustituye modelos antiguos.
Replaces old models.
Sostituzione vecchi modelli.
Remplace les anciens modèles.



REF	OEM
RECEFP-KT	



new

REF	OEM	
REC8M0103289	8M0062771	4.5L MPI (2A456613+) 6.2L MPI (2A449153+)



REF	OEM	
REC866170A01	866170A01	305, 350, 377 & 496 CID

GM V-8 con módulo de baja presión Gen III.
GM V-8 with Gen III cool fuel module low pressure.
GM V-8 con modulo di bassa pressione Gen III.
GM V-8 avec module basse pression Gen III.



REF	OEM	
REC861155A3	861155A3 861155A2	4.3, 5.0 / 5.7, 8.1L V6 & V8



MÓDULO DE COMBUSTIBLE COMPLETO | COMPLETE FUEL MODULE | MODULO CARBURANTE COMPLETO | MODULE DE CARBURANT COMPLET

new

REF	OEM	
REC8M0047215	8M0047215 864650A13 864650A05	5.7, 6.2, 8.1, 5.0, 8.2 496,350,377,520,540



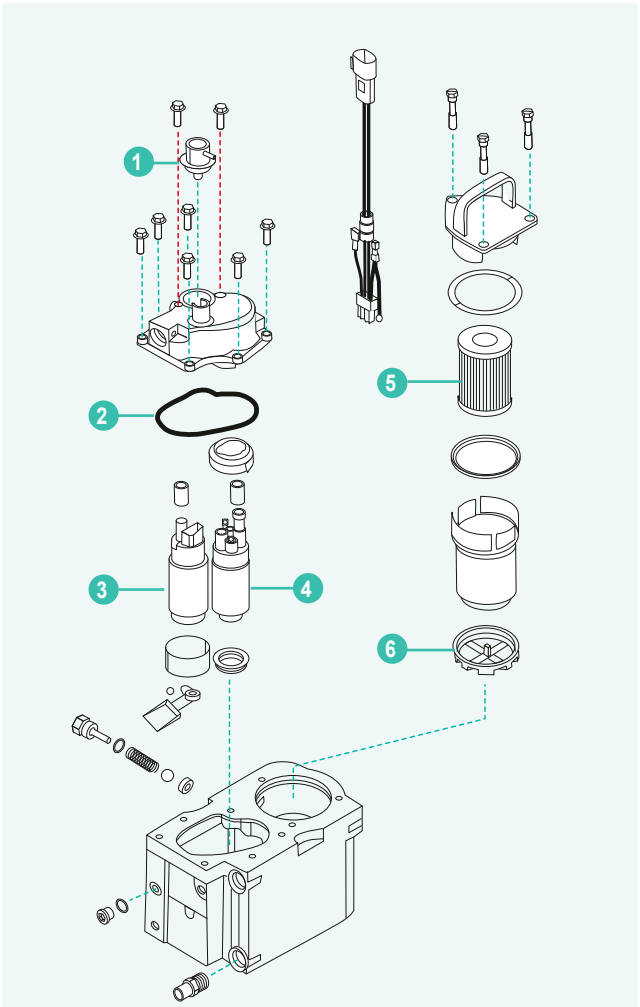

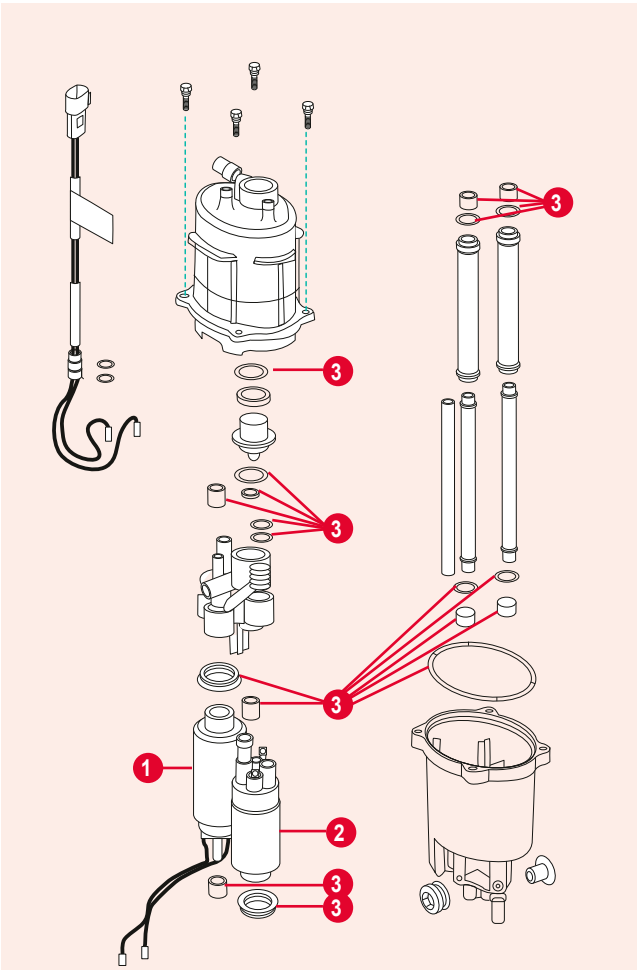

	REF	OEM				
1	REC892681	892681	REGULADOR	REGULATOR	REGOLATORE	REGULATEUR
2	REC26-892683	892683	JUNTAVST	VST GASKET	GUARNIZIONE VST	JOINT VST
3	REC866169T01	866169Y01	BOMBA DE ALTA PRESIÓN	PUMP, HIGH PRESSURE	POMPA ALTA PRESSIONE	POMPE HAUTE PRESSION
4	REC866170A01	866170A01	BOMBA BAJA PRESIÓN	PUMP, LOW PRESSURE	POMPA BASSA PRESSIONE	POMPE BASE PRESSION
5	REC35-866171A01	866171A01	FILTRO	FILTER	FILTRO	FILTRE
6	REC35-892665	892665	FILTRO GASOLINA	FUEL FILTER	FILTRO BENZINA	FILTRE À ESSENCE

	REF	OEM				
1	REC8M0062770	8M0062770	BOMBA DE ALTA PRESIÓN	PUMP, HIGH PRESSURE	POMPA ALTA PRESSIONE	POMPE HAUTE PRESSION
2	REC8M0103289	8M0062771	BOMBA BAJA PRESIÓN	PUMP, LOW PRESSURE	POMPA BASSA PRESSIONE	POMPE BASE PRESSION
3	REC8M0133370		KIT JUNTAS VST	GASKET VST, KIT	KIT GUARNIZIONE VST	KIT JOINTS VST

BOMBA DE COMBUSTIBLE Y KIT ENFRIADOR — ELECTRIC FUEL PUMP & COOLER — POMPA BENZINA E KIT SCAMBIATORE — POMPE À CARBURANT ET KIT REFROIDISEUR

REF	OEM	
REC861156A04	861156A04	(#807950) MPI, EFI & TB V6 & V8 (-0K999999)



REF	OEM	
REC861156A03	861156A03	(#865356) 4.3 MPI, 5.0 MPI, 350 MAG MPI, MX6.2 MPI 0M300000+



JUNTAS VST — VST GASKETS — GUARNIZIONE VST — JOINTS VST

new

REF	OEM	MOD.
REC26-892683	26-892683	REC8M0047215



new

REF	OEM	
REC8M0133370	8M0133370 8M0057679	-2A575398 2A575399+ 4.5 & 6.2

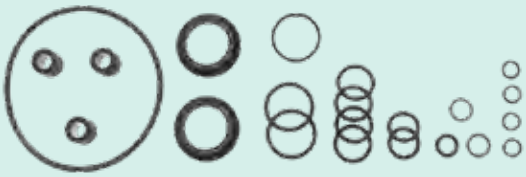

REF	OEM	
REC808500	808500	V6 & V8



REGULADOR PRESIÓN DE COMBUSTIBLE — FUEL PRESSURE REGULATOR — REGOLATORI PRESSIONE CARBURANTE — REGULATEUR DE PRESSION DE CARBURANT

ENFRIADOR DE COMBUSTIBLE — FUEL COOLER — SCAMBIATORE DI CALORE — REFROIDISSEUR DE CARBURANT

REF	OEM		
REC802630T01	802630T01 802630001 802630T 802630 8M0069803	MCM/MIE 7.4L MPI (L29) 496 Mag 8.1L	
REC860349A1	860349A1	MCM/MIE 7.4L/LX MPI 454 Mag MPI 502 Mag MPI MIE 8.2L MPI	
REC861126A1	861126A1	MCM 4.3 MPI 5.0 MPI, 350 Magnum, 8.1 L 6.2 MPI 7.4 MPI	MARRÓN, AZUL/VERDE BROWN & BLUE/GREEN MARRONE, BLU/VERDE MARRON, BLEU/VERD
REC807952A1	807952A1	MCM/MIE GM V-6 V-8 305, 350, 377 EFI/MPI, MCM 575SCi	ROSA PINK ROSA ROSE



REC802630T01



REC860349A1



REC861126A1



REC807952A1

CARRIL DE COMBUSTIBLE | FUEL RAIL | BINARIO DI ALIMENTAZIONE | RAIL DE CARBURANT

REF	OEM	
REC885174	885174	4.3L, 5.0L, 5.7L & 6.2L MPI (555 ECM)
REC849899	849899	MCM 500 EFI (Race sterndrive)
REC805227A1	805227A1	MCM/MIE 7.4L/LX MPI, 454 & 502 Mag MPI, 8.2L MPI


REC885174


REC849899


REC805227A1

TAPA DEL MÓDULO | MODULE COVER | COPERCHIO DEL MODULO | COUVERCLE DU MODULE

REF	OEM	
REC892681	892681	5.0L MPI 5.7L MPI 350 Magnum 6.2L MPI 496 Magnum 8.1L 8.2L 502 Mag MPI 375HP 425HP. 520, 540 (Race sterndrive)



INYECTORES | INJEKTOR | INIETTORE | INJECTEURS

INYECTOR | INJEKTOR | INIETTORE | INJECTEUR

new

REF	OEM	
REC8M6002428	8M6002428 8M6000652 8M0057686	4.5L MPI (2A441953+) 6.2L MPI (2A456613+)



REF	OEM	
REC885176	885176	MCM/MIE 4.3L MPI, 5.0L MPI, 350 Mag MPI, MX 6.2L MPI engines w/ECM555



REF	OEM	
REC802632T	802632T 802632	MCM/MIE 7.4L MPI (L29)



REF	OEM	
REC3858941	852956A1	MCM GM V6 & V8 (305 & 350 cid) TBI



REF	OEM	
REC881693002	881693002	MCM 496 Mag & HO, MIE 8.1S & HO



KIT RETENES DE INYECTOR — FUEL INJEKTOR SEAL KIT — KIT PARAOLIO INIETTORE — KIT JOINTS D'INJECTEUR

REF	OEM	
REC9-33304	802632T 849896	802632T & 849896 MCM/MIE 7.4L MPI (L29)



REF	OEM	
REC9-33301	885176	885176 MCM/MIE 4.3L, 5.0L, 350 Mag MPI, MX 6.2L w/ECM 555



REF	OEM	
REC9-33302	861260T 861260	861260T 350 Mag MPI (1998+) MX 6.2L MPI, 7.4L/502 Mag MPI (1999+) 8.2L MPI



REF	OEM	
REC9-33303	805225A1	805225A1 MCM/MIE Ski GM V-8 350, 377, 454, 502 MPI



REF	OEM	
REC853998A1	853998A1 851956A1 853998T 853998	852956A1 MCM GM V-6 & V-8 (305 & 350) TBI



P. 14

REF
STA93008
STA93016



P. 15

REF
GE22207



CARBURADOR | CARBURATOR | CARBURATORE | CARBURATEUR

CARBURADORES REMANUFACTURADOS | REBUILT CARBURATORS | CARBURATORI RIGENERATI | CARBURATEURS REMANUFACTURÉS

ROCHESTER

REF	OEM	
REC3304-9354A2	3304-9354A2 1347-804623R1/02	4



ROCHESTER

REF	OEM	
REC1347-9661A3	1347-9661A3 1347-8296A4 1347-7361A1 1347-7364A1	4



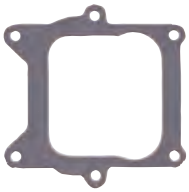

ROCHESTER

REF	OEM	
REC804626R02	1347-8288A1 1347-804626R1 804626R02 1347-6493A1 1347-8291A3 1347-7363A1 1347-7366A	4





ROCHESTER

REF	OEM	
REC1348-818621R02	1348-818621/R02 1347-8186211 1347-818621R02 1351-8480A2	2



ROCHESTER

REF	OEM	
REC1347-818619R02	1347-818619/R02 1347-8186191 1351-4263A1 1351-7354A1 1336-3594A1 1351-4263A2/A3 1351-5202A1 1351-6065A2	2



ROCHESTER

REF	OEM	
REC1376-818622R02	1376-818622R02 1347-818622 1376-5659A1 1347-8186221 1376-5744A1 1376-6152A1	2



ROCHESTER

REF	OEM	
REC3310-807312A1	3310-807312A1 3310-807312R02 1389-9670A2	2



CARBURADORES NUEVOS NEW CARBURATORS CARBURATORI NUOVI CARBURATEUR NOUVEAU

HOLLEY

REF		
MP426422	2	4.3L 500 CFM



HOLLEY

REF		
MP426574	4	5.7 L 600 CFM



HOLLEY

REF		
MP426766	4	7.4 L 750 CFM



Q-JET

REF	OEM		
REC1347-816373A4	1347-816373A4 1347-804624R02 3310-804624R1 1347-6492A1 1347-7362A1 1347-8292A4 1347-9662A4 1347-9415T	4	MCM 260, 350 MAG, 5.0L, 5.0LX, 5,7. (1982-95)



MERCARB

REF	OEM		
REC3310-864941A01	3310-864941A01	2	4.3L (2002-04) (OM615000- OW300012)

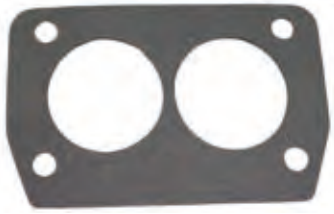



MERCARB

REF	OEM		
REC3310-864943A01	3310-864943A01 3310-861245A1	2	5.7 GM350 V8 (1998-01) 5.7 CARB ALPHA BRAVO 5.7 CARB MIE 5.7 CARB SKY 5.7 COMPETITION SKI (GEN+) GM 350 V8 (1998) 5.7L 1998+







MERCARB

REF	OEM		
REC3310-864942A01	3310-864942A01 3310-861448A1	2	5.0L ALPHA/BRAVO (-0M623982) 5.0L ALPHA/BRAVO (0M623983+) 5.0L (1998-04)

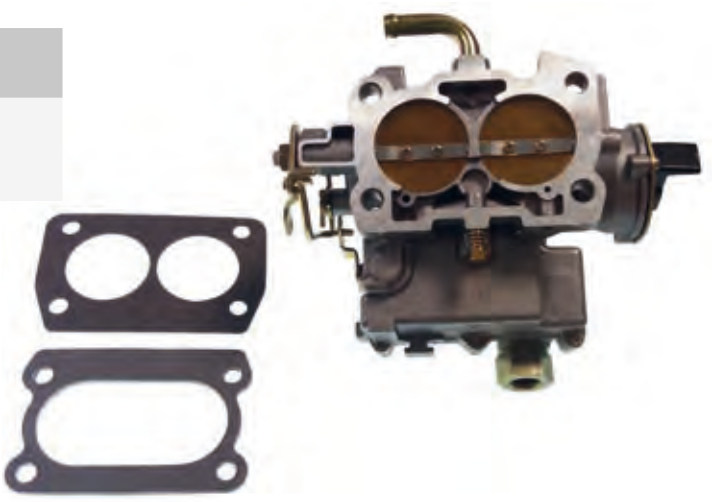

new

REF	OEM		
REC3310-860070A2	3310-860070A2 1389-9562A1 3310-806077A2 3310-860070A2 3310-9562A1 3310-9350A2 3310-806078A2 3310-815396A2	2	120, 140, 2.5 L & 3.0L

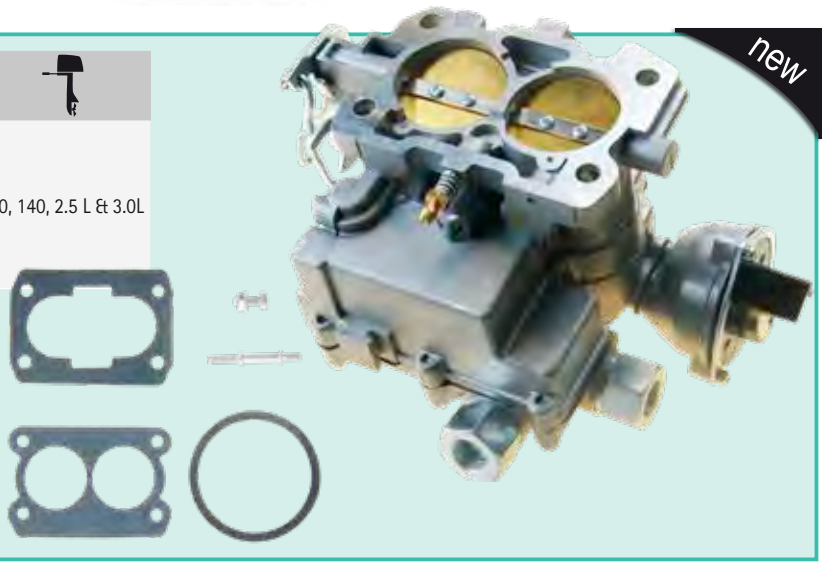

KITS ADAPTADORES CARBURADORES · CARBURETORS ADAPTER KITS · KIT ADATTATORE CARBURATORI · KIT ADPATATEURS DE CARBURATEURS

HOLLEY

REF
RECHOL17-6



CABLE MCM A HOLLEY
MCM TO HOLLEY CABLE
CAVI MCM A HOLLEY
CÂBLE MCM A HOLLEY

REF
RECHOL717-7



TUBO COMBUSTIBLE BOMBA A CARBURADOR · FUEL TUBE FROM PUMP TO CARBURETOR · TUBO DA COMBUSTIBILE A POMPA CARBURATORI · TUYAU CARBURANT, POMPE À CARBURATEUR

REF	
REC18-8115	3/8" x 25 - 5/8"
REC18-8114	3/8" x 31" - 5/8"



BOYAS — FLOATS — GALLEGGIANTI — FLOTEURS

ROCHESTER

REF	OEM	
REC1397-2060	1397-2060	2



ROCHESTER

REF	OEM	
REC1397-3327	1397-3327 1397-8546 1397-8959	4



ROCHESTER & MERCAB

REF	OEM	
REC3302-9031	1397-5837 3302-9031	2



WEBER

REF	OEM	
REC811536T	811536T 811536	4



KIT AGUJAS — INLET NEEDLE KIT — KIT SPILLO — KIT POINTEAU

WEBER

REF	OEM	
REC823727	823727	V6



WEBER

REF	OEM	
REC811534	811534	V8



MERCAB

REF	OEM	
REC3302-9407	3302-9407	Antiguo Old style Modello vecchio Ancien model



MERCAB

REF	OEM	
REC3302-804689	3302-804689	Moderno New style Modello moderno Model moderne



P. 14

REF
GEGC15



JUNTAS DE CARBURADOR | CARBURETOR GASKETS | GUARNIZIONE CARBURATORI | JOINTS CARBURATEURS

REF	OEM
REC27-48399	27-48399



REF	OEM	
REC27-805396	27-805396	5.7L & 7.4L MPI



ROCHESTER

REF	OEM	
REC27-64692	27-64692	4

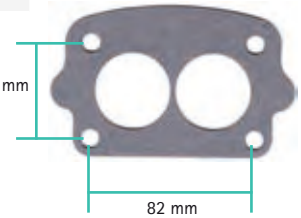

HOLLEY

REF	OEM	
REC27-65577	27-65577	4
REC27-41609	27-41609	4
REC27-70142	27-70142	2
REC27-60715	27-60715	2


REC27-70142


REC27-60715


REC27-41609


REC27-65577

ROCHESTER & WEBER

REF	OEM	
REC27-524572	27-524572	4
REC27-8079821	8079821 27-8079821 27-70143 27-701431 27-807982	2


REC27-524572

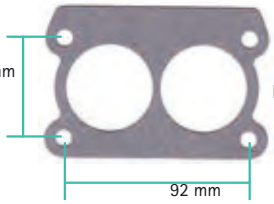

REC27-8079821

KIT JUNTAS DE CARBURADOR | CARBURETOR GASKETS KIT | KIT GUARNIZIONE CARBURATORI | KIT JOINTS CARBURATEURS

REF	OEM
REC823427A1	823427A1 1397-8873 1397-8872 1397-7547 1397-7542 1397-3459 1397-2634 1397-2067



REF	OEM
REC1397-8760	1397-8760 1397-5830 1397-7099



REF	OEM
REC1397-6367A1	1397-6367A1



REF	OEM
REC1398-3089	1398-3089 1346-2770



REF	OEM
REC1396-4656	1396-4656

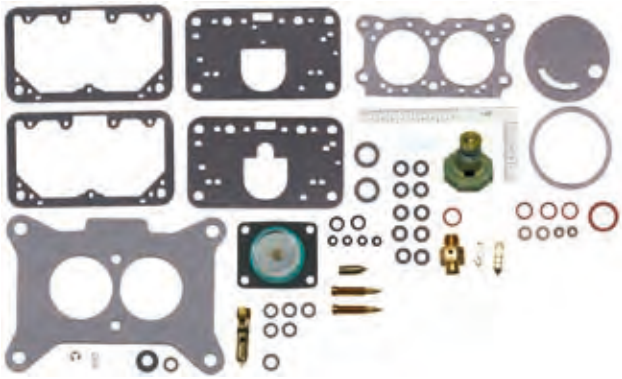

REF	OEM	
REC13220	13220	GM420 V8 (87-89) GM425 V8 454 (90-93) GM425 Gen- V V8 454 (92-93) GM440 TRS 454 (83-86) GM450 V8 454 (95-96) GM460 TRS V8 482 (83-86) GM465 V8 502 (90-92) GM465 Gen-V 502 V8 (92-94) 500 Gen+ GM502 V8 (1999) 500 Gen V 502 V8 (94-98) 500 Buldog 540 V8 (90-01)

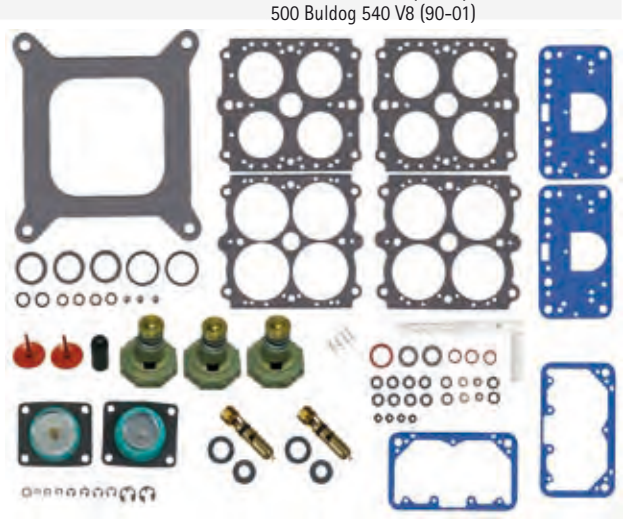

WEBER

REF	OEM	
REC809064	809064	4
REC809065	809065 835076 823728	4

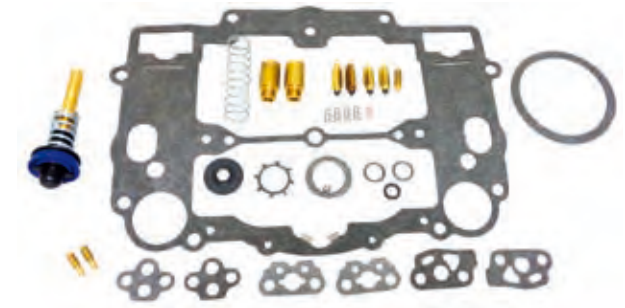

MERCAB

REF	OEM
REC3302-804845	3302-9437 3302-804845



MERCAB

REF	OEM
REC3302-804844002	3302-804844002



FORD + ROCHESTER

REF	OEM	
REC1397-5831	1397-5831	(1970-77)



FORD

REF	OEM	
REC1396-5238	1396-5238 1396-5222	FORD 351, (1970-74)



ROCHESTER

REF	OEM		
REC823426A1	823426A1	4	FORD 351, (1970-74)



GUÍA CARBURADORES — GUIDE CARBURETORS — GUIDA CARBURATORI — GUIDE DES CARBURATEURS

			SERIE SERIAL	CARB.	KIT CARB.	BASE	KIT	
ROCHESTER								
90/ L4	2	1970-72	2851424-3226957	REC1347-818619R02	REC823427A1	REC27-64692		REC1397-2060
110/ L4	2	1963-66	1357370-2044033	REC1347-818619R02	REC823427A1	REC27-64692		REC1397-2060
120/ L4	2	1972-82	3377341-6229717	REC1347-818619R02	REC823427A1	REC27-64692		REC1397-2060
120/2.5L L4	2	1983-89	6229718-0C853255	REC1347-818619R02	REC823427A1	REC27-64692		REC1397-2060
120 (GM153) L4	2	1983-86	6229718-0B531853	REC1348-818621R02	REC823427A1	REC27-64692		
140 (GM181) L4	2	1982-86	6229718-0B450800	REC1348-818621R02	REC823427A1	REC27-64692		
140 (GM181) L4	2	1968-78	02816417-09999999		REC823427A1	REC27-64692		REC1397-2060
140 (GM181) L4	2	1979-82	5157669-6229717		REC823427A1	REC27-64692		REC1397-2060
2.5L (GM153) L4	2	1987-89	0B531854-0C856558	REC1348-818621R02	REC823427A1	REC27-64692		
3.0L (GM181) L4	2	1987-89	0B450801-0C856558	REC1348-818621R02	REC823427A1	REC27-64692		
205 (4.3L/LX)	4	1987	0B527955-0B775129	REC3304-9354A2	REC823426A1	REC27-524572		REC1397-3327
205 (4.3L)	4	1985-87	0A331455-0B527954	REC3304-9354A2	REC823426A1	REC27-524572		REC1397-3327
4.3L /LX	4	1988-92	0B775130-0D714106	REC3304-9354A2	REC823426A1	REC27-524572		REC1397-3327
898/200/5.0L	2	1987-95	0B525982-0F600999	REC3310-807312A1	REC3302-804845	REC27-8079821		REC3302-9031
228 (GM305)	4	1977-84	4765100-0B525981	REC1347-9661A3	REC823426A1	REC27-524572		REC1397-3327
228 MIE (GM305)	4	1977-80	4765100-5907057	REC1347-9661A3	REC823426A1	REC27-524572		REC1397-3327
230 MIE (GM305)	4	1987-95	0B522506-0B788151	REC1347-9661A3	REC823426A1	REC27-524572		REC1397-3327
230 (GM305)	4	1985-87	6218462-0B773799	REC1347-9661A3	REC823426A1	REC27-524572		REC1397-3327
5.0LX (GM305)	4	1988-95	0B773740-0F600999	REC1347-9661A3	REC823426A1	REC27-524572		REC1397-3327
233 (351) FORD	2	1975-77	00000000-09999999	REC1376-818622R02	REC1397-8760	REC27-70142		REC3302-9031
233 MIE (351) FORD	2	1975-76	00000000-09999999	REC1376-818622R02	REC1397-8760	REC27-70142		REC3302-9031
888 (302) FORD	2	1971-77	3108723	REC1376-818622R02	REC1397-8760	REC27-70142		REC3302-9031
5.7L (2BBL)	2	1996-97	F601000-K999999	REC3310-807312A1	REC3302-804845	REC27-8079821		REC3302-9031
5.7L SKI	2	1996-97	0F775200-0K999999	REC3310-807312A1	REC3302-804845	REC27-8079821		REC3302-9031
260/5.7MIE	4	1987-93	0B522506-0F024999	REC1347-816373A4	REC823426A1	REC27-524572		REC1397-3327
260	4	1978-86	4908850-0B525981	REC1347-816373A4	REC823426A1	REC27-524572		REC1397-3327
260/5.7L ALPHA	4	1987-93	0B525982-0F000454	REC1347-816373A4	REC823426A1	REC27-524572		REC1397-3327
5.7L BRAVO (w/o High Rise Intake)	4	1987-91	0B525982-0D617327	REC1347-816373A4	REC823426A1	REC27-524572		REC1397-3327

			SERIE SERIAL	CARB.	KIT CARB.	BASE	KIT	
5.7L SKI	4	1985-93	0A338533-0F025099	REC1347-816373A4	REC823426A1	REC27-524572		REC1397-3327
300MR/TRS	4	1985-86	6668677-0B430367	REC1347-816373A4	REC823426A1	REC27-524572		REC1397-3327
330 MCM	4	1977-87	4623115-0B816540	REC804626R02	REC823426A1	REC27-524572		REC1397-3327
330 MIE	4	1977-80	4623115-5889913	REC804626R02	REC823426A1	REC27-524572		REC1397-3327
340/7.4L MIE	4	1981-92	5889914-0D715493	REC804626R02	REC823426A1	REC27-524572		REC1397-3327
7.4L BRAVO I/II	4	1988-91	0B771113-0D603117	REC804626R02	REC823426A1	REC27-524572		REC1397-3327
454 MAG ALPHA	4	1986-88	0A631894-0B785148	REC804626R02	REC823426A1	REC27-524572		REC1397-3327
MERCARB & WEBER								
120 (CID 153/ CYL L4)		1984		REC3310-860070A2	REC3302-804845		REC3302-9407	
120 (CID 153/ CYL L4)		1985		REC3310-860070A2	REC3302-804845		REC3302-9407	
120 (CID 153/ CYL L4)		1986		REC3310-860070A2	REC3302-804844002		REC3302-9407	
2.5L (CID 153/ CYL L4)		1987-89		REC3310-860070A2	REC3302-804844002		REC3302-9407	
140 (CID 181/ CYL L4)		1984		REC3310-860070A2	REC3302-804845		REC3302-9407	
140 (CID 181/ CYL L4)		1985		REC3310-860070A2	REC3302-804845		REC3302-9407	
140 (CID 181/ CYL L4)		1986		REC3310-860070A2	REC3302-804844002		REC3302-9407	
3.0L (CID 181/ CYL L4)		1987-89		REC3310-860070A2	REC3302-804844002		REC3302-9407	
3.0L (CID 181/ CYL L4)		1990		REC3310-860070A2	REC3302-804844002		REC3302-804689	
3.0L (CID 181/ CYL L4)		1991-93		REC3310-860070A2	REC3302-804844002		REC3302-804689	
3.0L (CID 181/ CYL L4)		1993-94		REC3310-860070A2	REC3302-804844002		REC3302-804689	
4.3LH (GEN+)	4	1998	0L010044-0M614999		REC809065	REC27-524572	REC823727	REC811536T
4.3L CARB ALPHA/BRAVO	2		0M615000-0W300012	REC3310-864941A01	REC3302-804844002	REC27-8079821	REC3302-804689	REC3302-9031
5.0L CARB ALPHA/BRAVO	2		0M600000 +	REC3310-864942A01	REC3302-804844002	REC27-8079821	REC3302-804689	REC3302-9031
5.0L GM305 V-8	2	1998	0L015751-0M599999	REC3310-864942A01	REC3302-804844002	REC27-8079821	REC3302-804689	REC3302-9031
5.7 CARB ALPHA/BRAVO	2		0M600000 +	REC3310-864943A01	REC3302-804844002	REC27-8079821	REC3302-804689	REC3302-9031
5.7L CARB MIE	2		0L002003-0W090899	REC3310-864943A01	REC3302-804844002	REC27-8079821	REC3302-804689	REC3302-9031
5.7L CARB SKY	2		0M317000-0W090899	REC3310-864943A01	REC3302-804844002	REC27-8079821	REC3302-804689	REC3302-9031
5.7L GM350V-8	2	1998-01	0L010037-0M599999	REC3310-864943A01	REC3302-804844002	REC27-8079821	REC3302-804689	REC3302-9031
5.7L COMPETITON SKY(GEN+)	2	1998	0L002005-0M316999	REC3310-864943A01	REC3302-804844002	REC27-8079821	REC3302-804689	REC3302-9031
7.4L MIE	4	1995-97	0F350000-0K999999		REC809064	REC27-41609	REC811534	REC811536T
7.4L BRAVO I/II	4	1995-97	0F352000-0K999999		REC809064	REC27-41609	REC811534	REC811536T
7.4L BRAVO III	4	1996-97	0F800700-0K999999		REC809064	REC27-41609	REC811534	REC811536T
TKS								
5.0L CARB ALPHA/BRAVO	2		0M600000-0W300009		REC3302-804844002	REC27-8079821	REC3302-804689	REC3302-9031
5.0L CARB ALPHA/BRAVO	2		0W300010 +		REC3302-804844002	REC27-8079821	REC3302-804689	REC3302-9031
5.7L CARB ALPHA/BRAVO	2		0M600000-0W300009		REC3302-804844002	REC27-8079821	REC3302-804689	REC3302-9031
5.7L CARB ALPHA/BRAVO	2		0W300010 +		REC3302-804844002	REC27-8079821	REC3302-804689	REC3302-9031
5.7 CARB MIE	2		0M317000-0W689999		REC3302-804844002	REC27-8079821	REC3302-804689	REC3302-9031
5.7 CARB MIE	2		0W690000 +		REC3302-804844002	REC27-8079821	REC3302-804689	REC3302-9031
5.7 CARB SKY	2		0M317000-0W689999		REC3302-804844002	REC27-8079821	REC3302-804689	REC3302-9031
5.7 CARB SKY	2		0W694844 +		REC3302-804844002	REC27-8079821	REC3302-804689	REC3302-9031

GUÍA KIT CARBURADORES GUIDE CARBURETORS KIT GUIDA KIT CARBURATORI GUIDE DES KIT CARBURATEURS

	SERIE	OEM	CARB	KIT		BASE	KIT	
	2520425-3377340	1336-3594A1	R2/2GC		REC1397-2060	REC27-64692		
	337341-3770649	1351-4263A3	R2/2GC	REC823427A1	REC1397-2060	REC27-64692		
	3770650-4469865	1351-5202A1	R2/2GC	REC823427A1	REC1397-2060	REC27-64692		
	4469866-5192048	1351-6065A2	R2/2GC	REC823427A1	REC1397-2060	REC27-64692		
MCM 120/2.5L	5192049-6229717	1351-7354A1	R2/2GC	REC823427A1	REC1397-2060	REC27-64692		
	6229718-0C853255	1351-8480A2	R2/2GC	REC823427A1		REC27-64692		
	6229718-0C853255	1389-8490A2	M2/MERCARB	REC3302-804844002	REC3302-9031	REC27-8079821	REC3302-9407	
	6229718-0C853255	1389-9350A2	M2/MERCARB	REC3302-804844002	REC3302-9031	REC27-8079821	REC3302-9407	
	6229718-0C853255	1389-9562A1	M2/MERCARB	REC3302-804844002	REC3302-9031	REC27-8079821	REC3302-9407	
	2816417-2911439	1351-4032A1	R2/2GC	REC823427A1	REC1397-2060	REC27-64692		
	2911440-3771644	1351-4293A1	R2/2GC	REC823427A1	REC1397-2060	REC27-64692		
	3771645-5157668	1351-5203A1	R2/2GC	REC823427A1	REC1397-2060	REC27-64692		
	5157669-6229717	1351-7355A1	R2/2GC	REC823427A1	REC1397-2060	REC27-64692		
	6229718-0C856556	1351-8480A2	R2/2GC	REC823427A1		REC27-64692		
MCM 140/3.0L/3.0LX (4 Cil.)	6229718-0C856556	1389-8490A2	M2/MERCARB	REC3302-804844002	REC3302-9031	REC27-8079821	REC3302-9407	
	6229718-0C856556	1389-9350A2	M2/MERCARB	REC3302-804844002	REC3302-9031	REC27-8079821	REC3302-9407	
	6229718-0C856556	1389-9562A1	M2/MERCARB	REC3302-804844002	REC3302-9031	REC27-8079821	REC3302-9407	
	0C856559-0D447414	1389-815396A2	M2/MERCARB					
	0D447415-0D836075	1389-9562A1	M2/MERCARB	REC3302-804844002	REC3302-9031	REC27-8079821	REC3302-9407	
	0D836076-0F603999	1389-815396A2	M2/MERCARB					
	LX 0C856559+	1389-815397A2	M2/MERCARB					

	SERIE	OEM	CARB	KIT		BASE	KIT
MCM 165/170/3.7L (4 Cil.)	6916779	1389-9564A1	M2/MERCARB	REC3302-804844002	REC3302-9031	REC27-8079821	REC3302-9407
MCM470	4208730-6916778	1376-5990A1	R2/2GC	REC823427A1	REC3302-9031	REC27-8079821	
	6218037-6916778	1389-8489A5	M2/MERCAB	REC3302-804844002	REC3302-9031	REC27-8079821	REC3302-804689
MCM185 (229CID)	6330183-6919655	3300-8886A 2	R4/4ME	REC823426A1	REC1397-2060	REC27-524572	
MCM485	5688394-6218036	1376-5990A1	R2/2GC	REC823427A1	REC3302-9031	REC27-64692	
MCM180/190/3.7LX	6916779	1347-9142A2	R4/4ME	REC823426A1	REC1397-3327	REC27-524572	
MCM488	6170297-6916778	1347-8460A3	R4/4ME	REC823426A1	REC1397-3327	REC27-524572	
	0A221455-0B527954	3304-9353A2	M2/MERCARB	REC3302-804845	REC3302-9031	REC27-8079821	REC3302-9407
MCM 175/185/4.3L V6	0A221455-0D714106	3304-9565A1	M2/MERCARB	REC3302-804844002	REC3302-9031	REC27-8079821	REC3302-9407
	0F000878+	3310-80776A1	M2/MERCARB	REC3302-804844002	REC3302-9031	REC27-8079821	REC3302-804689
MCM205/ 4.3LX/ 4.3LXH/LHV6	0A331455-0D714369	3304-9354A2	R4/4MV	REC823426A1	REC1397-3327	REC27-524572	
	0D714370-0F802999	3310-807826A1	WEBER	REC809064	REC811536T	REC27-524572	REC823727
MCM198MIE/898-V8	4762210-0B525981	1376-8295A3	R2/2GC	REC1397-5831	REC3302-9031	REC27-8079821	
MCM898/200 V8	6218462-0B525981	1389-9563A1	M2/MERCARB	REC3302-804844002	REC3302-9031	REC27-8079821	REC3302-9407
MCM200/5.0L V8	0B525982-0F600999	1389-9670A2	M2/MERCARB	REC3302-804844002	REC3302-9031	REC27-8079821	REC3302-804689
MCM5.0L (GENE+) V8	0L157751+	3310-861448A1	M2/MERCARB		REC3302-9031	REC27-8079821	REC3302-804689
MCM888 V8	3108723-4887829	1356-4642	H2/2300	REC1396-4656	REC3302-9031	REC27-60715	
	3108723-4887829	1376-5659A1	R2/2GC	REC1397-5831		REC27-8079821	
MCM228/TR/MIE V8	4765100-5069430	1347-6427A1	R4/4MV	REC823426A1	REC1397-3327	REC27-524572	
	4765100-5069430	1347-6438A1	R4/4MV	REC823426A1	REC1397-3327	REC27-524572	
MCM228V8	5069431-6021783	1347-7361A1	R4/4MV	REC823426A1	REC1397-3327	REC27-524572	
	6021784-6218461	1347-8296A4	R4/4MV	REC823426A1	REC1397-3327	REC27-524572	
MCM228/230/5.0LX	6218462-0F600999	1347-9661A3	R4/4MV	REC823426A1	REC1397-3327	REC27-524572	
MCM228MIE V8	5069431-6040745	1347-7364A1	R4/4MV	REC823426A1	REC1397-3327	REC27-524572	
MCM230MIE V8	6040746-0B788151	1347-8290A1	R4/4MV	REC823426A1	REC1397-3327	REC27-524572	
MCM233/MIE V8	4173000-4465029	1346-57744A1	R2/2GC	REC1397-5831	REC3302-9031	REC27-8079821	
	4465030-4902304	1346-6152A2	R2/2GC	REC1397-5831	REC3302-9031	REC27-8079821	
MCM250 (350CID) V8	4768000-4908849	1347-3353	R4/4MV	REC823426A1	REC1397-3327	REC27-48399	
	4768000-4908849	1347-3237A3	R4/4MV	REC823426A1	REC1397-3327	REC27-48399	
MCM255/MIE (Ford)	3258728-4175499	1356-5169	H4/4160	REC17-8M0065070		REC17-14872A1	
MCM255/MIE V8	4175500-4924564	1347-5732A1	R4/4MV	REC823426A1	REC1397-3327	REC27-524572	
	4924565-5195908	1347-7062A1	R4/4MV	REC823426A1	REC1397-3327	REC27-524572	
	5195909-5907057	1347-7365A1	R4/4MV	REC823426A1	REC1397-3327	REC27-524572	
MCM260MIE V8	5907058-0B522505	1347-8289A1	R4/4MV	REC823426A1	REC1397-3327	REC27-524572	
MCM260MIE/ 5.7MIE	0B522506-0F024999	1347-9662A4	R4/4MV	REC823426A1	REC1397-3327	REC27-524572	
MCM5.7MIE V8	0F025000-0F349299	3310-806761A1	WEBER		REC811536T	REC27-524572	REC811534
	0F025000-0F349299	3310-806761A2	WEBER		REC811536T	REC27-524572	REC811534
	0F349300-0F622099	3310-806761A3	WEBER		REC811536T	REC27-524572	REC811534
	0F622100-0K999999	3310-806762A2	WEBER		REC811536T	REC27-524572	REC811534
MCM5.7MIE (2BBL)	0L002003+	3310-861245A1	MERCARB		REC3302-9031	REC27-8079821	REC3302-804689
255 V8	4175500-4767999	1347-5732A 1	R4/4MV	REC823426A1	REC1397-3327	REC27-524572	
260 V8	4908850-5060805	1347-6492A 1	R4/4MV	REC823426A1	REC1397-3327	REC27-524572	
	5060806-6024393	1347-7362A 1	R4/4MV	REC823426A1	REC1397-3327	REC27-524572	
	6024393-0B525981	1347-8292A 1	R4/4MV	REC823426A1	REC1397-3327	REC27-524572	
260 V8/5.7L Alpha	0B525982-0F000454	1347-9662A 4	R4/4MV	REC823426A1	REC1397-3327	REC27-524572	
5.7L Alpha V8	0F000455-0F273497	3310-806761A 1	WEBER			REC27-524572	REC811534
	0F273498-0F600999	3310-806761A 3	WEBER			REC27-524572	REC811534
5.7L (2BBL) V8	0F601000-0K999999	3310-807312A 1	MERCARB			REC27-8079821	REC3302-804689
5.7L (Gen+) (2BBL)	0L010037+	3310-861245A1	MERCARB			REC27-8079821	REC3302-804689
5.7LX (4BBL) V8	0F601000-0K999999	3310-807262A 2	WEBER			REC27-524572	REC811534
5.7L Bravo V8	0B525982-0D617327	1347-9662A 4	R4/4MV	REC823426A1	REC1397-3327	REC27-524572	
	0B525982-0D617327	1347-8289A 1	R4/4MV	REC823426A1	REC1397-3327	REC27-524572	
	0B525982-0D617327	3310-806970A 1	WEBER		REC811536T	REC27-524572	REC811534
350 Magnum Alpha	0A635178-0D617327	1347-8289A 1	R4/4MV	REC823426A1	REC1397-3327	REC27-524572	
	0D617328-0F600999	3310-806970A 1	WEBER		REC811536T	REC27-524572	REC811534
	0F601000-0K999999	3310-807262A 2	WEBER		REC811536T	REC27-524572	REC811534
5.7L Ski V8	0A338533-0F025099	1347-9415T	R4/4MV	REC823426A1	REC1397-3327	REC27-524572	
	0F025100-0F449999	3310-806761A 2	WEBER		REC811536T	REC27-524572	REC811534
	0F450000-0F775199	3310-806761A 3	WEBER		REC811536T	REC27-524572	REC811534
5.7L Ski (2BBL) V8	0F775200-0K999999	3310-807312A 1	MERCARB		REC3302-9031	REC27-8079821	REC3302-804689
5.7L Ski (Gen+) (2BBL) V8	0L002005+	3310-861245A 1	MERCARB		REC3302-9031	REC27-8079821	REC3302-804689
350 MAG Ski V8	0D505450-0K999999	3310-807262A 2	WEBER		REC811536T	REC27-524572	REC811534
	0K040400-0K999999	3310-860371A 1	WEBER		REC811536T	REC27-524572	REC811534
270 MCM/MIE V8	2851074-3385720	1347-4180A 1	R4/4MV	REC823426A1	REC1397-3327	REC27-524572	
280 TRS V8	4176250-4176468	1347-4179A 2	R4/4MV	REC823426A1	REC1397-3327	REC27-524572	
	4176469-4770199	1347-5981A 1	R4/4MV	REC823426A1	REC1397-3327	REC27-524572	
300 MR/TRS V8	6668677-0B430367	1347-7498A 7	R4/4MV	REC823426A1	REC1397-3327	REC27-524572	
325 MCM/MIE V8	2278747-3042730	1347-3342	R4/4MV	REC823426A1	REC1397-3327	REC27-524572	
	3042731-3780449	1347-4533A 1	R4/4MV	REC823426A1	REC1397-3327	REC27-524572	
	2278747-3080449	1347-3689A 1	R4/4MV	REC823426A1	REC1397-3327	REC27-524572	

	SERIE	OEM	CARB	KIT		BASE	KIT
330 MCM V8	4623115-5027230	1347-6493A 1	R4/4MV	REC823426A1	REC1397-3327	REC27-524572	
	5027231-6083144	1347-7363A 1	R4/4MV	REC823426A1	REC1397-3327	REC27-524572	
	6083145-0B816540	1347-8291A 3	R4/4MV	REC823426A1	REC1397-3327	REC27-524572	
330 MIE V8	4623115-5226384	1347-6493A 1	R4/4MV	REC823426A1	REC1397-3327	REC27-524572	
	5226385-5889913	1347-7366A 1	R4/4MV	REC823426A1	REC1397-3327	REC27-524572	
340/7.4L MIE V8	5889914-0D715493	1347-8288A 1	R4/4MV	REC823426A1	REC1397-3327	REC27-524572	
7.4L Hurth V8	0D715494-0F349999	3310-80969A 2	WEBER		REC811536T	REC27-524572	REC811534
7.4L BORG WARNER V8	0D715494-0F349999	3310-80969A 3	WEBER		REC811536T	REC27-524572	REC811534
7.4L MIE V8	0F350000-0K999999	3310-86969A 1	WEBER		REC811536T	REC27-524572	REC811534
	0B771113-0D603117	1347-8291A 3	R4/4MV	REC823426A1	REC1397-3327	REC27-524572	
7.4L BRAVO I/II V8	0D603118-0F351999	3310-86969A 2	WEBER		REC811536T	REC27-524572	REC811534
	0F352000-0K999999	3310-86969A 1	WEBER		REC811536T	REC27-524572	REC811534
7.4L BRAVO III V8	0D838819-0F800699	3310-806755A 2	WEBER		REC811536T	REC27-524572	REC811534
	0F800700-0K999999	3310-806969A 1	WEBER		REC811536T	REC27-524572	REC811534
370 V8	4179554-0B714586	1347-7498A 2	R4/4MV	REC823426A1	REC1397-3327	REC27-524572	
400 V8	TODOS - All	1347-7498A 2	R4/4MV	REC823426A1	REC1397-3327	REC27-524572	
420/425 V8	0A398941-0D937011	13549A 4	H4	REC13220			
440/460 V8	4179554-0B485220	1393-8862A 1	H4	REC13220			
450 V8	0F347100-0F347277	13549A 4	H4	REC13220			
454 MAG Alpha V8	0A631894-0B785148	1347-8291A 3	R4/4MV	REC823426A1	REC1397-3327	REC27-524572	
	0A631894-0B785148	1347-8291A 3	R4/4MV	REC823426A1	REC1397-3327	REC27-524572	
454 MAG Bravo V8	0B721206-0D808068	1347-7498A 2	R4/4MV	REC823426A1	REC1397-3327	REC27-524572	
	0D808069-0F304999	3310-806755A 1	WEBER		REC811536T	REC27-524572	REC811534
	0F305000-0K999999	3310-806755A 2	WEBER		REC811536T	REC27-524572	REC811534
465 V8	0C849992-0F213244	N/D	H4	REC13220			
500 (502 CID) V8	0F213293-0F615766	13549A12	H4	REC13220			
	0F615767+	13549T21	H4	REC13220			
500 Bulldog (540 CID) V8	0C577254-0F348987	13549A10	H4	REC13220			
	0F615767+	13549A23	H4	REC13220			
502 MAG V8	0C878221-0D824588	1347-814623A 2	R4/4MV	REC823426A1	REC1397-3327	REC27-524572	
	0D824589-0F114528	3310-806971A 1	WEBER		REC811536T	REC27-524572	REC811534
8.2L MIE V8	0C878221-0D857199	1347-814623A 2	R4/4MV	REC823426A1	REC1397-3327	REC27-524572	
	0D878221-0F819619	3310-806971A 1	WEBER		REC811536T	REC27-524572	REC811534

CHOKE

REF	OEM	
REC1396-4148	1396-4148	HOLLEY
REC809066	809066	WEBER 4v Carb (electric choke)
REC70125A02	70125A02 70125A1 70125	ROCHESTER & MERCAB



REC809066
REC1396-4148



REC70125A02

DEPRESOR | CHOKE PULL-OFF | DEPRESSORE | ÉTRANGLEUR PULL-OFF

REF	OEM	
REC1397-8582	1397-8582	Rochester, 4v carb.



TERMOSTATO | THERMOSTAT | TERMOSTATO | THERMOSTAT

REF	OEM	
REC71464A01	71464 71464A01 72625	Rochester (divorced Choke)



APAGALLAMAS | FLAME ARRESTORS | PARAFIAMMA | ARRÊTEURS DE FLAMMES

REF	OEM	A	B	C	
REC861259	861259	6.04	3.94	9.40	
REC805016A1	805016A1	6.20	4.00	7.80	4 & 6 Cyl.
REC85785A2	85785A2	5.71	3.73	12.83	V8
REC85784A1	85784A1	5.48	2.76	7.93	4 & 6 Cyl.
REC805298A1	85785T 85785-2 805298A1	5.71	3.73	12.83	V8

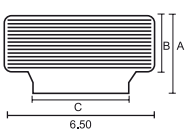



REC861259



REC85785A2



REC805298A1



REC85784A1



REC805016A1

TURBO | TURBO | TURBINE | TURBO

TURBO | TURBO | TURBINE | TURBO

REF	OEM			
REC8M0098619	8M0098619 889341	CMD CMDQ 4.2 D4.2L / 300 D-TRONIC	REC27-8M0094247	RM21325765



KIT JUNTAS PARA TURBO | TURBO GASKET KIT | KIT GUARNIZIONE PER TURBINE | KIT JOINTS POUR TURBO

REF	OEM	TURBO
REC27-8M0094247	24-8M0094247 27-898101475 27-801333454 27-854129	REC8M0098619

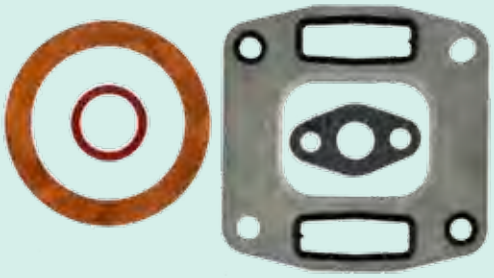

ABRAZADERA ESCAPE TURBO | TURBO, EXHAUST CLAMP | FASCETTA SCARICO TURBO | COLLIER ECHAPPEMENT TURBO

REF	OEM	
RM21325765	864148A01 54-896332164 801763272 801331174 864148	D/CMD/QSD 1.7 / 2.0 / 3.0 / 3.6 / 2.8 / 4.2 D183, 219, 254, 530, 636 7.3L



RETÉN ACEITE DE TURBO | TURBO, SEAL | PARAOLIO TURBO | JOINT SPI DE TURBO

REF	OEM	
REC25-811461	811461	2.8 / 4.2 D254



SISTEMA ELÉCTRICO
ELECTRIC SYSTEM

SISTEMA ELETTRICO
SYSTÈME ÉLECTRIQUE

SENSORES — SENSORS — SENSORE — CAPTEURS

SENSOR TPS — TPS SENDER — SENSORE TPS — CAPTEUR TPS

REF	OEM	
REC8M0125617	8M0125617 881070T 805226A1	3.0L MPI MCM/MIE V-6 & 305, 350, 454, 502 EFI

new



REF	OEM	
REC803148	803148	MCM/MIE 350 Mag, Blk Scorpion Ski (0L005900 & +)



REF	OEM	
REC853678T	853678T 853678	MCM/MIE 4.3L, 5.0L, MX 6,2L w/ECM555, 350 Mag MPI, Blk Scorpion Ski, 7,4L MPI (L29), MCM 496 Mag & HO, 8.1S & HO



SENSOR MAP — MAP SENSOR — SENSORE MAP — CAPTEUR MAP

REF	OEM	
REC8M0054726	881731 8M0054726	V6 & V8 MPI (555 ECM)



REF	OEM	
REC3850396	864856A1 805217A1	MCM/MIE GM V-6 & 350, 377, MX 6.2L MPI, 7,4L MPI, 454, 502 EFI



REF	OEM	
REC879150150	879150150 849934	MCM 575SCI



REF	OEM	
REC854445	854445	MCM 525 EFI



REF	OEM	
REC861249A1	861249A1 861249	MCM/MIE GM V-6 & 305, 350, MX 6.2L MPI, 7,4L MPI (1998+) 5.0L, 5.7L EFI (1998)



SENSOR MAT/MAP — MAT/MAP SENSOR — SENSORE MAT/MAP — CAPTEUR MAT/MAP

REF	OEM	
REC8M0087834	885165 8M0087834	350MAG MPI 377MAG MPI 383MAG STROKER 4.3L MPI 5.0L MPI 5.7L MPI 6.2L MPI



SENSOR PICK UP — PICK UP SENSOR — SENSORE PICK UP — CAPTEUR PICK UP

REF	OEM	
REC3854001	811639 811639T	V4 / V6 / V8 Delco Voyager



SENSOR DE OXÍGENO — OXYGEN SENSOR — SENSORE OSSIGENO — SONDE À OXYGENE

new

REF	OEM	
REC8M2003959	8M2003959	3.0 MPI, 4.3 MPI, 4.5 MPI, 6.2 MPI, 5.0L MPI, 5.7L MPI 8.2/377



new

REF	OEM	
REC8M0142695	8M0142695 8M0095468	4.5 MPI, 6.2 MPI



VÁLVULA DE AIRE, IAC — AIR VALVE, IDLE — VALVOLA ARIA — SOUPAPE D'AIRE

REF	OEM	
REC862998	862998	3.0LMPI, 4.3 MPI, 5.0L MPI, 350 MAG MPI, MX6.2 MPI, 8.1L 600, 662, 700 (Race sterndrive)



SENSOR IAC — IAC SENDER — SENSORE IAC — SONDE IAC

REF	OEM	
REC3855194	805224A1	MCM/MIE GM V-6 & 305, 350, 454, 502 EFI 500, 575 (Race sterndrive)



REF	OEM	
REC3843751	803149	MCM/MIE 350 Mag MPI Black Scorpion Ski, 377 Scorpion, MCM & Ski MX 6.2L MPI, 7.4L MPI (L29), 575SCi



SENSOR PICADO — KNOCK SENDER — SENSORE DI CADUTA — CAPTEUR DE CLIQUETIS

REF	OEM	
REC8M0077616	805544T 8M0077616	454, 502, 540, 572 7.4L, 454 MAGNUM 8.2L 500, 525, 575, 600, 800 (Race sterndrive)



REF	OEM	
REC806612T	806612T	MCM/MIE 305, 350, 377 GM V8 CID



new

REF	OEM	
REC8M6003194	8M6003194 878187	V6 & V8



SENSOR POSICIÓN ÁRBOL DE LEVAS | CAMSHAFT SENSOR | SENSORE POSIZIONE ASSE A CAMME | SONDE POSITION ARBRE À CAMMES

REF	OEM	
REC3863130	898141	3.0, 4.3, 5.0, 5.7, 6.2L

Se instala en distribuidor
Is installed in distributor
Viene installato nello spinterogeno
Installé dans le distributeur



SENSOR POSICIÓN CIGÜEÑAL | CRANKSHAFT SENSOR | SENSORE POSIZIONE ALBERO MOTORE | SONDE POSITION VILEBREQUIN

REF	OEM	
REC892617	892617	8.1L 496 Mag, H.O. BRAVO

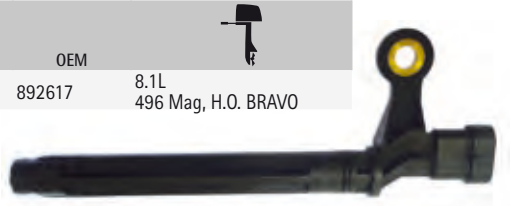

REF	OEM	
REC892615002	892615002 892615001 892615	MCM 496 Mag, 8.1 Inboard



REF	OEM	
REC864297T01	864297T01 864297 864297001	350 Magnum, 377 Magnum MPI, 5.0L MPI, 5.7L MPI, 6.2L MPI, 8.2L MPI 4.3L CARB / MPI 525, 600, 662, 700 (Race sterndrive)



new

REF	OEM	
REC8M0082988	8M0082988 8M0030022 8283582 828358	3.0L MPI



new

REF	OEM	
REC21124849	879194363	4.3 MPI 4.5MPI & 6.2MPI

Cigüeñal con tapa de AL
Crankshaft cup in AL
Albero motore con coperchio AL
Vilebrequin avec couvercle en AL



KIT SENSOR TRIM | TRIM SENSOR KIT | KIT SENSORI TRIM | KIT SONDE DE TRIM

new

REF	OEM	
REC805320A03	805320A03	MC-1, MR, ALPHA ONE, GEN II & BRAVO



KIT SENSOR DIGITAL TRIM | DIGITAL TRIM SENDER | SENSORE TRIM DIGITAL | SONDE DE TRIM DIGITAL

new

REF	OEM	
REC8M0095310	8M0095310	ALPHA ONE GEN II (1998+) BRAVO I,II, III (2A417474+)



KIT TEMPERATURA Y PRESIÓN DE ACEITE CON ALARMA
COMPLETE TEMPERATURE & OIL PRESSURE WARNING KIT
KIT TEMPERATURA E PRESSIONE DELL'OLIO CON ALLARME
KIT SONDE TEMPERATURE ET PRESSION D'HUILE AVEC ALARME

REF	OEM
REC41400	



SENSOR PRESIÓN DE ACEITE
OIL PRESSURE SENDER
SENSORE PRESIONE OLIO
SONDE PRESSION D'HUILE

REF	OEM		A
REC8M0068784	87-815425T 8M0068784 90806 815425 34623	1/8 - 27	10 - 31



REF	OEM	
REC87-805605A1	87-805605A1	3.0L (1990-95) 4.3L (1993-98) 5.0L (1988-01) 5.7L (1988-01) 7.4L (1991-00)



new

REF	OEM	
REC8M6000634	8M6000634 897447002 889659002	4.5L MPI 6.2L MPI



new

REF	OEM		PSI
REC881879T11	881879T11 881879A6 859210 859210T 859604A1 881879011	4.3, 5.7, 6.2, 8.2 MPI 8.1, 496, 520, 540	0-100



SENSOR PRESIÓN ACEITE RAIL
OIL PRESSURE SENDER RAIL
SENSORE PRESIONE OLIO RAIL
SONDE PRESSION D'HUILE RAIL

new

REF	OEM	
REC3843100	879172105	CMD QSD 2.8, 4.2 2.0L EI, ES



SENSOR ACEITE PARA BOMBA COMBUSTIBLE
ELECTRIC FUEL PUMP SWITCH SENSOR
SENSORE OLIO PER POMPA COMBUSTIBILE
SONDE D'HUILE POUR POMPE CARBURANT

REF	OEM	
REC87-864252	87-864252	4.3, 5.0, 5.7 Motores modernos Later engines Motori moderno Moteurs modernes



REF	OEM	
REC87-864252A01	87-864252A01	4.3, 5.0, 5.7 Motores antiguos Old engines Motori vecchio Moteurs anciens



SENSOR DE TEMPERATURA AIRE | AIR TEMPERATURE SENSOR | SENSORE TEMPERATURA ARIA | SONDE TEMPERATURE DE L'AIRE

REF	OEM	
REC805223T	805223T 805223	V6 & V8 (350, 454, 496 & 502 CID) EFI / MPI 500, 520, 525, 540, 575 (Race sterndrive)

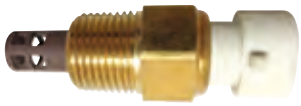

SENSOR TEMPERATURA ENFRIADOR | COOLANT TEMPERATURE SENDER | SENSORE TEMPERATURA SCAMBIATORE | SONDE TEMPERATURE DE REFROIDISSEUR

REF	OEM	
REC3850397	805218T 805218	350 MAG ,PI 383 MAG 4.3L MPI, 5.0L MPI, 3.0L MPI 6.2L MPI 357, 377 4.3 CARB, EFI 454, 496 MAG, EFI 5.7L CARB, EFI 8.1, 8.2L MIE



SENSOR CAUDAL DEL AGUA | WATER SENSOR | SENSORE ACQUA | SONDE DE L'EAU

REF	OEM		PSI
REC8M6000623	8M6000623 881879010 8818793	V6 & V8 4.5L MPI	50



SENSOR TEMPERATURA AGUA | WATER TEMPERATURE SENDER | SENSORE TEMPERATURA ACQUA | SONDE TEMPERATURE DE L'EAU

REF	OEM	
REC97258A1	97258A1 97258 34625 FI6900198 FI6900152	1/2" - 14 NPT



REF	OEM	
REC806490T	806490T 97257A1 97-257 806490 811091 36525	3/8" - 18 NPT



REF	OEM
REC48952	48952



new

REF	OEM	
REC15995	15995	MCM 3.7l

PARA RELOJES
FOR GAUGES
PER GLI OROLOGI
POUR LES GAUGES

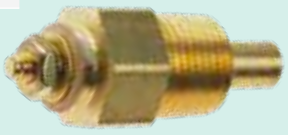

new

REF	OEM	
REC8M0148668	8M0148668 885342002 885342001	6.2L MPI, 4.3L, 4.5L MPI, 3.0L MPI 8.1L, 8.2L MPI 496 MAG, 525 EFI



new

REF	OEM	
REC8M0142542	8M0142542	TRANSMISION: ZF63, 63A 3.0L VM V6 AXIUS SYSTEM



MOD.	CYL		SERIE SERIAL SERIE SERIE	INYECTOR INJECTOR INNIETORE INJECTEUR	KIT	IAC	TPS	REGULADOR PRESIÓN REGULATOR PRESSURE REGOLATORE PRESSIONE REGULATEUR RAIL	COOLER	MAP	PICADO KNOCK BATTITO CLIQUETIS	TEMP. AIRE AIR TEMP. TEMP. ARIA TEMP. AIRE
262 MAG EFI	262/V6	1996-97	OF803800-OK999999		REC3858941	REC3855194	REC8M0125617		REC807952A1	REC3850396		
4.3L EFI	262/V6	1998-01	OL012009-OM299999		REC3858941	REC3855194	REC8M0125617		REC807952A1	REC861249A1		REC805223T
4.3L MPI	262/V6	2002-07	OM300000+	REC885176	REC9-33301	REC862998	REC853678T	REC885174	REC807952A1			REC3850397
5.0L EFI	305/V8	1998-01	OL012052-OM299999		REC853998A1	REC3855194	REC8M0125617		REC807952A1	REC861249A1		REC805223T
5.0L MPI	305/V8	2002-07	OM300000+	REC885176	REC9-33301	REC862998	REC853678T	REC885174	REC861126A1			
5.0L MPI DTS	305/V8	2005-07	OW310000+	REC885176	REC9-33301			REC885174				
320 EFI	350/V8	1987-89	OA543604-OC622418			REC862998						
350 MAG ALPHA EFI (GEN+)	350/V8	1996-97	OF800300-OK999999		REC853998A1	REC3855194	REC8M0125617		REC807952A1	REC3850396	REC806612T	
350 MAG BRAVO MPI	350/V8	1995-96	OF415189-OK001500			REC3855194	REC8M0125617			REC3850396	REC806612T	
350 MAG BRAVO MPI (GEN+)	350/V8	1997	OK001501-OK999999		REC9-33303	REC3855194	REC8M0125617		REC807952A1	REC3850396	REC806612T	
	350/V8	1994-96	OF215561-OF820706		REC853998A1	REC3855194	REC8M0125617			REC3850396	REC806612T	
350 MAG EFI SKI	350/V8	1996	OF820707-OK040005		REC853998A1	REC3855194	REC8M0125617		REC807952A1	REC3850396	REC806612T	
	350/V8	1997	OK040006-OK999999		REC853998A1	REC3855194	REC8M0125617		REC807952A1	REC3850396	REC806612T	
	350/V8	1998	OL010019-OL331598		REC9-33302	REC3843751	REC853678T		REC807952A1	REC861249A1	REC806612T	
	350/V8	1998	OL336000-OL346999		REC9-33302	REC3843751	REC853678T		REC807952A1	REC861249A1	REC806612T	
350 MAG MPI	350/V8	1999	OL331599-OL-335999		REC9-33302	REC3843751	REC803148		REC807952A1	REC861249A1	REC806612T	REC805223T
	350/V8	1999-01	OL340000-OM299999		REC9-33302	REC3843751	REC803148		REC807952A1	REC861249A1	REC806612T	REC805223T
	350/V8	2002-07	OM300000+	REC885176	REC9-33301	REC862998	REC853678T	REC885174	REC861126A1			
350 MAG MPI DTS	350/V8	2005-07	OW310000+	REC885176	REC9-33301			REC885174				
350 MAG MPI HORIZON	350/V8	2002-07	OM300000+	REC885176	REC9-33301	REC862998	REC853678T	REC885174	REC861126A1			
350 MAG MPI HORIZON DTS	350/V8	2005-07	OW310000+	REC885176	REC9-33301			REC885174				
	350/V8	1999-01	OL304700-OM299999		REC9-33302	REC3843751	REC803148		REC807952A1	REC861249A1	REC806612T	
350 MAG MPI HORIZON MIE	350/V8	2002-04	OM300000-OM398371	REC885176	REC9-33301	REC862998	REC853678T		REC861126A1			
	350/V8	2004-07	OM398372+	REC885176	REC9-33301	REC862998	REC853678T	REC885174				
350 MAG MPI HORIZON MIE DTS	350/V8	2005-07	OW310000+	REC885176	REC9-33301			REC885174				
	350/V8	1998	OL002008-OL304999		REC9-33302	REC3843751	REC853678T		REC807952A1	REC861249A1	REC806612T	
350 MAG MPI MIE	350/V8	2002-04	OM300000-OM398371	REC885176	REC9-33301	REC862998	REC853678T	REC885174	REC861126A1			
	350/V8	2004-07	OM398372+	REC885176	REC9-33301	REC862998	REC853678T	REC885174				
350 MAG MPI MIE DTS	350/V8	2005-07	OW310000+	REC885176	REC9-33301			REC885174				
350 MAG EFI SKI	350/V8	1994-96	OF215561-OF820706		REC853998A1	REC3855194	REC8M0125617			REC3850396	REC806612T	
	350/V8	1998	OL002600-OL304599		REC9-33302	REC3843751	REC853678T		REC807952A1	REC861249A1	REC806612T	
350 MAG MPI SKI	350/V8	1999-01	OL304600-OM299999		REC9-33302	REC3843751	REC803148		REC807952A1	REC861249A1	REC806612T	
	350/V8	2002-07	OM300000+	REC885176	REC9-33301	REC862998	REC853678T	REC885174	REC861126A1			
5.7L EFI	350/V8	1995-97	OF225560-OK999999		REC853998A1	REC3855194	REC8M0125617		REC807952A1	REC3850396	REC806612T	
5.7L EFI (GEN+)	350/V8	1998-01	OL010035-OM299999		REC853998A1	REC3855194	REC8M0125617		REC807952A1	REC861249A1	REC806612T	REC805223T
	350/V8	1997	OK040300-OK999999		REC853998A1	REC3855194	REC8M0125617		REC807952A1	REC3850396	REC806612T	
5.7LX BRAVO EFI (GEN+)	350/V8	1996-97	OF800300-OK999999		REC853998A1	REC3855194	REC8M0125617		REC807952A1	REC3850396	REC806612T	
5.7LX EFI	350/V8	1995-97	OF225560-OK999999		REC853998A1	REC3855194	REC8M0125617		REC807952A1	REC3850396	REC806612T	
	350/V8	1996	OF350583-OK040000			REC3843751	REC853678T	REC885174		REC3850396	REC806612T	
	350/V8	1997	OK040001-OL002699		REC9-33303	REC3843751	REC853678T		REC807952A1	REC3850396	REC806612T	
BLACK SCORPION SKI	350/V8	1998	OL002700-OL005600		REC9-33303	REC3843751	REC853678T		REC807952A1		REC806612T	
	350/V8	1998-05	OL005601-OM391599		REC9-33303	REC3843751	REC803148		REC807952A1		REC806612T	
	350/V8	2003-07	OM391600+		REC9-33303	REC862998	REC803148		REC807952A1			
377 SCORPION MCM	377/V8	1999-05	OL416146-OM907201		REC9-33303	REC3843751	REC803148		REC807952A1	REC3850396	REC806612T	
377 SCORPION SKI	377/V8	1997-98	OK000656-OL600314		REC9-33303	REC3843751	REC853678T		REC807952A1	REC3850396	REC806612T	
	377/V8	2000-01	OL68003-OM299999		REC9-33302	REC3843751	REC803148		REC807952A1	REC861249A1	REC806612T	REC805223T
MX 6.2L MPI	377/V8	2002-04	OM300000-OW059999	REC885176	REC9-33301	REC862998	REC853678T	REC885174	REC861126A1			
	377/V8	2004-07	OW060000+	REC885176	REC9-33301	REC862998	REC853678T	REC885174				
MX 6.2 MPI DTS	377/V8	2005-07	OW310000+	REC885176	REC9-33301			REC885174				
MX 6.2L MPI HORIZON	377/V8	2002-04	OM300000-OW059999	REC885176	REC9-33301	REC862998	REC853678T	REC885174	REC861126A1			
	377/V8	2004-07	OW060000+	REC885176	REC9-33301	REC862998	REC853678T	REC885174				

MOD.	CYL		SERIE SERIAL SERIE SERIE	INYECTOR INJECTOR INNIETORE INJECTEUR	KIT	IAC	TPS	REGULADOR PRESIÓN REGULATOR PRESSURE REGOLATORE PRESSIONE REGULATEUR RAIL	COOLER	MAP	PICADO KNOCK BATTITO CLIQUETIS	TEMP. AIRE AIR TEMP. TEMP. ARIA TEMP. AIRE
MX 6.2L MPI HORIZON DTS	377/V8	2005-07	OW310000+	REC885176	REC9-33301	REC862998		REC885174				
MX 6.2L MPI HORIZON MIE	377/V8	2002-04	OM300000-OM398394	REC885176	REC9-33301	REC862998	REC853678T	REC885174	REC861126A1			
	377/V8	2004-07	OM398395+	REC885176	REC9-33301	REC862998	REC853678T	REC885174				
MX 6.2L MPI HORIZON MIE DTS	377/V8	2005-07	OW390000+	REC885176	REC9-33301			REC885174				
MX 6.2L MPI MIE	377/V8	2002-04	OM300000-OM398394	REC885176	REC9-33301	REC862998	REC853678T	REC885174	REC861126A1			
	377/V8	2004-07	OM398395+	REC885176	REC9-33301	REC862998	REC853678T	REC885174				
MX 6.2L MPI MIE DTS	377/V8	2005-07	OW390000+	REC885176	REC9-33301	REC862998		REC885174				
MX 6.2L MPI SKI	377/V8	2002-07	OM317000+	REC885176	REC9-33301	REC862998	REC853678T	REC885174	REC861126A1			
MX 6.2L BLACK SCORPION SKI	377/V8	2001-03	OL005601-OM391599		REC9-33303	REC3843751	REC803148		REC807952A1		REC806612T	
	377/V8	2003-07	OK391750+		REC9-33303	REC862998	REC803148		REC807952A1			
454 MAG EFI	454/V8	1994-96	OF115700-OF802349		REC9-33303	REC3855194	REC8M0125617	REC805227A1		REC3850396	REC8M0077616	REC805223T
454 MAG EFI SKI	454/V8	1994-96	OF215800-OF820099		REC9-33303	REC3855194	REC8M0125617	REC805227A1		REC3850396	REC8M0077616	REC805223T
	454/V8	1996-97	OF820099-OK999999		REC9-33303	REC3855194	REC8M0125617	REC805227A1		REC3850396	REC8M0077616	
454 MAG MPI	454/V8	1996-97	OF802350-OK147349		REC9-33303	REC3855194	REC8M0125617	REC805227A1		REC3850396	REC8M0077616	REC805223T
	454/V8	1996-97	OK147350-OL085399		REC9-33303	REC3855194	REC8M0125617	REC805227A1	REC860349A1	REC3850396	REC8M0077616	
	454/V8	1997-98	OL085400-OM024999		REC9-33302	REC3855194	REC8M0125617		REC861126A1	REC3850396	REC8M0077616	
454 MAG MPI HORIZON MIE	454/V8	1999-01	OL002200-OL086049		REC9-33303	REC3855194	REC8M0125617	REC805227A1	REC860349A1	REC3850396	REC8M0077616	
	454/V8	1998	OL086050-OL674000		REC9-33302	REC3855194	REC8M0125617		REC861126A1	REC3850396	REC8M0077616	
74.L MPI (L29)	454/V8	1999-01	OL010003-OM024330	REC802632T	REC9-33304	REC3843751	REC853678T	REC802630T01	REC861126A1	REC861249A1	REC8M0077616	REC805223T
7.4L MPI MIE	454/V8	1998-01	OF503052-OK147349		REC9-33303	REC3855194	REC8M0125617	REC805227A1		REC3850396	REC8M0077616	REC805223T
	454/V8	1995-96	OK147350-OK999999		REC9-33303	REC3855194	REC8M0125617	REC805227A1	REC860349A1	REC3850396	REC8M0077616	
7.4L MPI MIE (L29)	454/V8	1997	OL010003-OL674613	REC802632T	REC9-33304	REC3843751	REC8M0125617	REC802630T01	REC861126A1	REC861249A1	REC8M0077616	REC805223T
7.4LX TBI	454/V8	1998-01	OF820000-OK999999			REC3855194	REC8M0125617		REC807952A1	REC3850396	REC8M0077616	
7:4LX MPI	454/V8	1996-97	OF602010-OK147349		REC9-33303	REC3855194	REC8M0125617	REC805227A1		REC3850396	REC8M0077616	REC805223T
	454/V8	1996	OK147350-OK999999		REC9-33303	REC3855194	REC8M0125617	REC805227A1	REC860349A1	REC3850396	REC8M0077616	REC805223T
496 MAG	496/V8	1997	OM025000-OW059999	REC881693002		REC862998	REC853678T	REC802630T01	REC861126A1			
	496/V8	2001-04	OW060000+	REC881693002		REC862998	REC853678T	N.S.S.	REC892681	REC8M0054726		
496 MAG DTS	496/V8	2004-07	OM025000-OW059999	REC881693002				REC802630T01	REC861126A1			
	496/V8	2001-04	OW060000+	REC881693002				N.S.S.		REC8M0054726		
496 MAG HO	496/V8	2004-07	OM025000-OW059999	REC881693002		REC862998	REC853678T	REC802630T01	REC861126A1			REC805223T
	496/V8	2001-04	OW060000+	REC881693002		REC862998	REC853678T	N.S.S.		REC8M0054726		REC805223T
496 MAG HO DTS	496/V8	2004-07	OM025000-OW059999	REC881693002				REC802630T01	REC861126A1			REC805223T
	496/V8	2001-04	OW060000+	REC881693002				N.S.S.		REC8M0054726		REC805223T
8.1L MIE	496/V8	2004-07	OM026000-OW059999	REC881693002		REC862998	REC853678T	REC802630T01	REC861126A1			REC805223T
	496/V8	2001-04	OW090000+	REC881693002		REC862998	REC853678T	N.S.S.	REC892681	REC8M0054726		REC805223T
8.1L HO MIE	496/V8	2004-07	OM026000-OW089999	REC881693002		REC862998	REC853678T	REC802630T01	REC861126A1			REC805223T
	496/V8	2001-04	OW090000+	REC881693002		REC862998	REC853678T	N.S.S.	REC892681	REC8M0054726		REC805223T
500 EFI	502/V8	2004-07	OL001477+		REC9-33304	REC3855194		REC849899	REC861126A1	REC3850396	REC8M0077616	
502 MAG MPI	502/V8	1999-05	OD840650-OK147349		REC9-33303	REC3855194	REC8M0125617	REC805227A1		REC3850396	REC8M0077616	
	502/V8	1993-96	OK147350-OL085432		REC9-33303	REC3855194	REC8M0125617	REC805227A1	REC860349A1	REC3850396	REC8M0077616	REC805223T
	502/V8	1997-98	OL085432-OM024999		REC9-33302	REC3855194	REC8M0125617		REC861126A1	REC3850396	REC8M0077616	REC805223T
525 EFI	502/V8	1999-01	OM900146+		REC9-33303		REC8M0125617		REC861126A1	REC854445		
575 SCI	502/V8	2003-07	OL306696-OM950526			REC3855194	REC8M0125617		REC807952A1	REC879150150	REC8M0077616	REC805223T
8.2 MPI MIE	502/V8	00-05	OF819620-OK147349		REC9-33303	REC3855194	REC8M0125617	REC805227A1		REC3850396	REC8M0077616	
	502/V8	1996	OK127350-OL086012		REC9-33303	REC3855194	REC8M0125617	REC805227A1	REC860349A1	REC3850396	REC8M0077616	
	502/V8	97-98	OL086013-OL674200		REC9-33303	REC3855194	REC8M0125617		REC861126A1	REC3850396	REC8M0077616	

MOTORES DE ARRANQUE STARTERS MOTORINI AVVIAMENTO DEMARREUR

new

REF	OEM				
REC50-8M0095471	50-8M0095471	12V	11 CW	14"	4.5L MPI 2A441953+ 6.2L MPI 2A456613+

	OEM
REC10-861788	10-861788



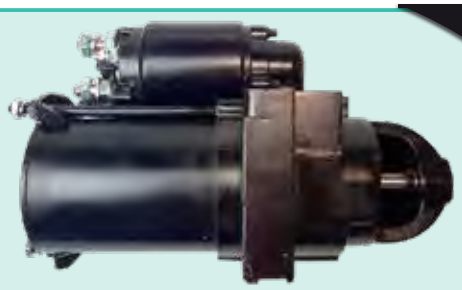

Motor de arranque para substituir a todos los motores de tamaño pequeño con tornillos fijación en diagonal excepto los 7.4L

Starter to replace all the little engines with diagonally fixation screws exepting 7.4L.

Motorino d'avviamento per sostituire tutti i motori V 6 e V8 con motorini con viti di supporto trasversali eccetto i motori 7.4L

Démarreur pour remplacer tous les moteurs de petite taille avec des vis de fixation diagonales sauf 7.4L

REF	OEM					
REC50-863007A1	50-863007A1	12V 1.4 kW	11	14"	REC3859054	4 cyl V6 & V8 3.0L

	OEM
REC10-861788	10-861788





Motor de arranque Heavy Duty. Tornillos de fijación en diagonal.

Starter with diagonally fixation screws.

Motorino d'avviamento Heavy Duty con viti di supporto trasversali.

Démarreur à usage intensif. Vis de fixation diagonale.

REF	OEM					
REC3885317	50-864340A2	12V 1.7 kW	11	14"	RECPG260	V6 & V8 7.4L

	OEM
REC10-861788	10-861788





REF	OEM				
REC3854190	50-69865A1 50-12782 50-56886	12V	10	REC0987883	FORD 5.0 & 5.8L



Tornillos de fijación en diagonal.

Starter with diagonally fixation screws.

Viti di supporto trasversali.

Vis de fixation diagonale.

REF	OEM					
REC50-99418A2	50-864340A2 50-99418A2	12V	9	14 1/4"	REC3853869	V6 & V8

	OEM
REC10-861788	10-861788





Contrarrotación o montaje en campana.

Starter counter clockwise.

Controrotante, posizionato nella campana.

Contre-rotation ou montage sur capot.

REF	OEM			
REC50-808011A05	50-808011A05 50-88671A1 50-80811A4	12V 1.4 kW	9	4, 6 & 8 cyl 5.7 MIE / 6.2 MIE.



Motor de arranque pequeño 4 en línea.

Starter Clockwise for 4L.

Viti di supporto trasversali

Petit moteur de démarrage 4 en ligne.

REF	OEM					
REC50-806965A4	50-863007A1 50-806963A2 50-806965A4	12V 1.4 kW	11	12 3/4"	REC3859054	V6 & V8

	OEM
MP0180-001	10-812509184
REC10-861788	10-861788





REF	OEM					
REC50-8M0090697	50-812429A2 50-806965A2 50-806965A4 50-8M0090697	12V 1.4 kW	11	12 3/4"	REC3859054	3.0L

	OEM
MP0180-001	10-812509184
REC10-861788	10-861788



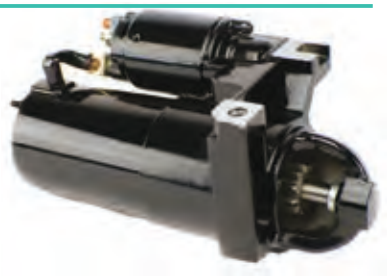

Modelo antiguo. Motor de arranque 4 en línea. Tornillos sujección misma altura

Old style. Starter heavy duty standard rotation 4 inline. In line mounting holes.

Modello vecchio. Motorino d'avviamento 4 in linea. (Viti di supporto parallele)

Modèle plus ancien. Démarreur 4 en ligne. Vis de fixation de même hauteur.

REF	OEM				
	50-806965A4 50-99417A2	12V	9	REC3853869	V6 & V8

	OEM
MP0180-001	10-812509184
REC10-861788	10-861788





REF	OEM			
REC3916854	50-805991	12V	10	7.3L BRAVO & MIE DIESEL NAV444 V8 (1994-96) 6.9L



Motor de arranque 4 en línea modelo 470.

Starter clockwise 4 in line 470 mod. and engines with transmission.

Motorino d'avviamento 4 in linea modello 470.

Moteur de démarrage 4 en ligne modèle 470.

REF	OEM			
REC50-97499A2	50-72550A2 50-47454 50-65785A1 50-79604A3	12V 1.4 kW	9	4, 6 & 8 cyl



new



PMGR

REF	OEM			
REC879194371	879194371 882481	12V 1.4 KW	13 CW	CMD 1.7 MI/MS D1.7L DTI

new



PMGR

REF	OEM			
REC879172259	879172259 896332191	12V 2.3 KW	9 CW	CMD2.8 CMD QSD 2.8 & 4.2

ALTERNADORES | ALTERNATORS | ALTERNATORI | ALTERNATEURS

new

REF	OEM				
			6		
REC898101505	898101505	12V 110A	SERPENTÍN GROOVE PULLEY SERPENTINA SERPENTINE		CMD QSD 2.0/2.8 & 4.2 2.0L EI



REF	OEM			REG.	
REC69729	78403A2 59755 69729 56045	12V 61A	SIMPLE SINGLE SINGOLA SIMPLE	AUTOEXCITANTE SELF-EXCITING AUTOECCITANTE AUTO-EXCITANT	CMD QSD 2.0/2.8 & 4.2 2.0L EI



REF	OEM			REG.	
REC78403A2	817119A4 78402 78403A1 78403A32 92497A3	12V 63A	SIMPLE SINGLE SINGOLA SIMPLE	AUTOEXCITANTE SELF-EXCITING AUTOECCITANTE AUTO-EXCITANT	3.0/V6 & V8



REF	OEM			REG.	
			6 (65 mm)		
REC862031T1	862031T1 862031 862031T	12V 70A	SERPENTÍN GROOVE PULLEY SERPENTINA SERPENTINE	INTERNO INTERNAL INTERNO INTERNE	4.3 & 5.7L (1997+)



REF	OEM			REG.	
REC3860769	817119A4 98555 12449 19685 817119 817119A1	12V 55A	SIMPLE SINGLE SINGOLA SIMPLE	INTERNO INTERNAL INTERNO INTERNE	4.3 & 5.7L (1998+)



REF	OEM			REG.	
REC805884T	805884T 805884 805447T	12V 65A	SIMPLE SINGLE SINGOLA SIMPLE	INTERNO INTERNAL INTERNO INTERNE	EFI & diesel



REF	OEM			REG.	
REC862030T01	862030T01 862030T	12V 70A	SIMPLE SINGLE SINGOLA SIMPLE	INTERNO INTERNAL INTERNO INTERNE	3.0L (1999+)



REF	OEM			REG.	
REC807653T	807653T 807653	12V 65A	6 SERPENTÍN GROOVE PULLEY SERPENTINA SERPENTINE	INTERNO INTERNAL INTERNO INTERNE	V6 & V8 (MANDO)



REF	OEM			REG.	
REC807652T	807652T 807652	12V 55A	6 SERPENTÍN GROOVE PULLEY SERPENTINA SERPENTINE	INTERNO INTERNAL INTERNO INTERNE	V6 & V8 (MANDO)



REF	OEM			REG.	
REC863077T	863077T 86307AR01	12V 70A	6 (50 mm) SERPENTÍN GROOVE PULLEY SERPENTINA SERPENTINE	INTERNO INTERNAL INTERNO INTERNE	4.3L, 6.2L & 5.7L (1995+) 4.5 MPI 8.1 & 4.2L



REF	OEM			
REC882571	882571 8M0084523	12V 50A	6 (50 mm) SERPENTÍN GROOVE PULLEY SERPENTINA SERPENTINE	MCM 1.7L DTI. CMD 1.7 MI 120 L/L4 CMD 1.7 MS 120L/L4

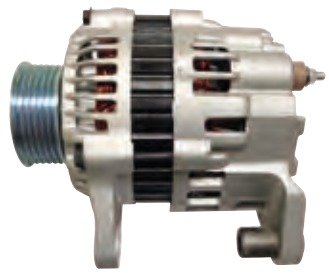

REF	OEM			
REC8M0064021	834832 834832T2 857006A3	12V 50A	4 SERPENTÍN GROOVE PULLEY SERPENTINA SERPENTINE	RACE STERNDRIVE 500EFI, 575 SCI



KIT SUSTITUCIÓN ALTERNADOR | ALTERNATOR CONVERSION KIT | KIT SOSTITUZIONE ALTERNATORE | KIT ALTERNATEUR

REF		
REC18-5953	12V 68A	470 (3.7L) 224 (3.7L)



REGULADOR ALTERNADOR | VOLTAGE REGULATOR FOR ALTERNATORS | REGOLATORE ALTERNATORE | REGULATEUR ALTERNATEUR

REF	OEM	
REC42785	42785	MANDO



TRIM

MOTOR TRIM | TRIM ENGINES | MOTORI TRIM | MOTEUR TRIM

Motor Trim completo con soporte inox. Incluye motor, solenoides, fusible y cableado.

Complete bracket assembly with Tilt/Trim motor, solenoids, fuse block and wiring. Stainless steel bracket.

Motore trim completo di supporto in acciaio inox. Include il motore, solenoide, fusibile e cablaggio.

Moteur de réglage complet avec support en acier inoxydable. Comprend le moteur, les solénoïdes, le fusible et le câblage.

REF	OEM	
REC865380A25	414336A6 14336A9 88183A12	(1983+) Quick connect



Motor Trim completo con depósito.

Oildyne Complete for late -MCM.

Motore trim completo con serbatoio.

Moteur trim complet avec réservoir.

REF	OEM	
REC865380A13	865380A13 865380A25 88183A12 14336A8 14336A20	12V



REF	OEM			
REC891736T	891736T 17649 17649T	12V	3	Alphal, II gen & Bravo



CONVERTIDOR DE 3 A 2 CABLES / 3 TO 2 WIRE WIRED CONVERTER / CONVERTITORE CAVI DA 3 A 2 FILI / FAISCEAU CONVERTISSEUR 3 À 2 FILS

REF	OEM
REC84-819514T26	

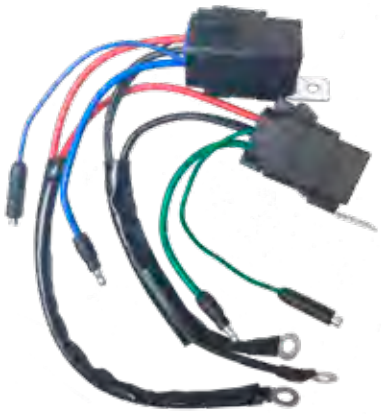

SOPORTE CON PARTES ELECTRICAS / BRACKET ASSY / SUPPORTO TRIM / SUPPORT POMPE DE TRIM AVEC RELAIS

Soporte motor Trim fabricado en acero inox. Incluye solenoides, fusible y cableado.

Bracket assembly with solenoids, fuse block and wiring. Stainless steel bracket.

Supporto motorino Trim in acciaio inox. Include i solenoidi, fusibile e cablaggio.

Le support du moteur de la garniture est en acier inoxydable. Comprend les solénoïdes, le fusible et le câblage.

REF	OEM
REC862548A1	865380A13



REF	OEM
REC42419A1	862548A1 42419A1



VASCHETTA TRIM / RESERVOIR TRIM

DEPÓSITO TRIM / RESERVOIR TRIM

REF	OEM	
REC18525A1	18525A1	1
REC883166A2	883166A2	4





P. 27

SOLENOIDES | SOLENOID | SOLENOIDI | SOLÉNOÏDE

REF	OEM	
REC89-818999A2	89-818999A2 89-818999A1 89-805188A1	12V



SOLENOIDE TRIM | TRIM SOLENOID | SOLENOIDI TRIM | SOLÉNOÏDE TRIM

REF	OEM	
REC89-96158T	89-96158T 89-96158	12V
REC852565	89-853654A1 89-68258A4	
REC89-818997A1	89-818997T1 89-818997A1	


REC852565


REC89-818997A1


REC89-96158T

SOLENOIDE ARRANQUE | STARTER SOLENOID | SOLENOIDI AVVIAMENTO | SOLÉNOÏDE DE DEMARREUR

REF	OEM	
REC89-96054T	89-96054T 89-96054 89-91975	12V
REC89-96158T	89-818864T 89-818864	
REC3853839	87-76416A1	
REC378444	25661T1 25661	
REC65057T1	65057T1 65057A1	


REC89-96158T


REC3853839


REC378444


REC65057T1


REC89-96054T

SOLENOIDE DELCO REMY | DELCO REMY SOLENOID | SOLENOIDI DELCO REMY | SOLÉNOÏDE DELCO REMY

REF	OEM		
REC13037	13037 8733261	9.5 cm	12V
REC3853869	89-853654A1 89-18080 89-99253	7.5 cm	
REC3859054	809463A1		


REC13037
REC3853869


REC3859054

EXTENSOR DE SOLENOIDE PARA TERMINALES | SOLENOID EXTENSOR FOR TERMINALS | PROLUNGA TERMINALE PER SOLENOIDE | EXTENSION POUR SOLÉNOÏDE

REF	OEM
REC855314	



RELÉ | RELAY | RELÉ | RELAIS

REF	OEM		
REC876037	8M0057697 8M0032176	4.5L & 6.2L MPI	40/30 A



RELÉ ARRANQUE Y BOMBA GASOLINA | RELAY FOR IGNITION & FUEL PUMP | RELÉ DI AVVIAMENTO, E POMPA BENZINA | RELAIS DE DEMARREUR ET POMPE D'ESSENCE

REF	OEM
REC86-865202T	86-865202T



RELÉ PARA ACELERADOR Y EJE | RELAY FOR THROTTLE AND SHIFT | RELÉ DI ACCELERATORE E ASSE | RELAIS POUR L'ACCÉLÉRATION ET L'ARBRE

REF	OEM	
REC882751A04	882751A04	496 MAG (BASE & H.O.) 8.1L INBOARD (BASE & H.O.) 8.1L TOWSPORT

Relay para cable mecánico
Relay for mechanical wire
Relé per cavo meccanico
Relais de câble mécanique



REF	OEM	
REC3854138	882751A1 828151 828151A1 882751A2 882751	8.2L INBOARD (BASE & H.O.) EC 8.2L MAG V6 & V8

Relay para cable digital y mecánico
Relay for digital & mechanical cable
Relé per cavo digitale e meccanico
Relais pour câble digital et mécanique



RELÉ PARA ALARMA Y VARIOS | RELAY FOR ALARM & OTHERS | RELÉ PER ALARMA E ALTRI | RELAIS POUR ALARME ET D'AUTRES

REF	OEM	
REC882751A04	821509 821509T01	CMD 2.8 EI, ES (165) CMD 4.2 EI, ES, MI, MS (200, 230, 250, 300) D2.8L/165 D-TRONIC D3.0L, D3.6L, D4.2L/(200, 220, 250, 300)



FUSIBLE MOTOR | CIRCUIT BREAKER | FUSIBILE MOTORE | FUSIBLE MOTEUR

REF	OEM	
BS2142	88-11178A01	50A
BS2143	88-93582	60A
BS2138	88-8M2011907	15A



FUSIBLE MOTOR TRIM | TRIM FUSE ASSY | FUSIBILE MOTORINI TRIM | FUSIBLE MOTEUR TRIM

REF	OEM	
REC88-79023T10	88-79023T10	110A
RM88-79023A91	88-79023A91	90A



REC88-79023T10



RM88-79023A91

FUSIBLE ATM | ATM FUSE | FUSIBILE ATM | FUSIBLE ATM

REF	OEM	⚡	
AM603905	88-832969T05	5 A	
AM603910	88-832969T10	10 A	
AM603915	88-832969T15	15 A	2
AM603920	88-832969T20	20 A	
AM603930	88-832969T30	30 A	



FUSIBLE ATC | ATC FUSE | FUSIBILE ATC | FUSIBLE ATC

REF	OEM	⚡	
BS5291		3 A	
BS5299		4 A	
BS5292	862646	5 A	
BS5293		7,5 A	
BS5294	862647	10 A	2
BS5295		15 A	
BS5296	88-212619	20 A	
BS5297		25 A	
BS5298		30 A	

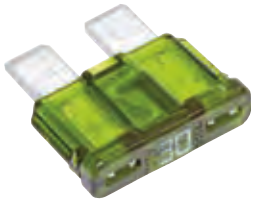

FUSIBLE MAXI | MAXI FUSE | FUSIBILE MAXI | FUSIBLE MAXI

REF	OEM	⚡	
BS5138		30 A	
BS5139		40 A	
BS5140	88-79023A94	50 A	2
BS5141		60 A	
BS5142		70 A	
BS5143		80 A	

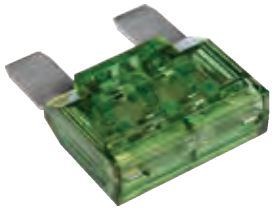

FUSIBLE TERMINAL DE BATERIA | BATTERY SWITCH FUSE | FUSIBILE TERMINALE BATERIA | FUSIBLE TERMINAL BATERIE

REF	OEM	⚡
BS5175	88-8M0129533	30A
BS5177	88-8M0129534	50A
BS5181	88-8M0129535	80A
BS5182	88-8M0129560	90A
BS5183	88-8M0130941	100A
BS5185	88-8M0129528	150A
BS5187	88-8M0129530	200A
BS5189	88-8M0129531	250A



REF	OEM
BS5191	



MERCATHODE | MERCATHODE | MERCATHODE | MERCATHODE

REF	OEM
REC42600A09	42600A09 42600A5 42600A3 42600A1



INTERRUPTORES TRIM | POWER TRIM SWITCH ASSY | INTERRUTTORE TRIM | COMMUTATEUR DE TRIM

REF	OEM	
REC87-18286A43	87-18286A43	
REC87-858679T2	87-858679T2	12V
REC87-859032T02	87-859032T02	



REC87-18286A43



REC87-859032T02

new



REC87-858679T2

INTERRUPTORES DE PARO | IGNITION KILL SWITCH | INTERRUTTORE DI STOP | INTERRUPTEUR DE STOP

new

REF	OEM	
REC87-91941A8	87-91941A8	12V



new

REF	OEM	
REC803623001	803623001 811406 803623	D/CMD 2.8L D/CMD 4.2L D/CMD 1.7L D254TURBO

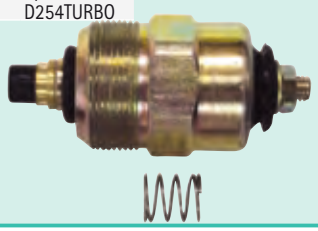

new

REF	OEM
REC87-19674A1	87-19674A1



new

REF	OEM
REC8M0092849	8M0092489



ALARMA | ALARM ASSY | KIT ALLARME | BUZZER D'ALARME

new

REF	OEM
REC8M0144930	8M0144930



SISTEMA ENCENDIDO
IGNITON SYSTEM

SISTEMA DI ACCENSIONE
SYSTÈME D'ALLUMAGE

BOBINAS — COILS — BOBINE — BOBINES

BOBINA DE ENCENDIDO — IGNITION COIL — BOBINA DI ACCENSIONE — BOBINE D'ALLUMAGE

new

REF	OEM	
REC300-8M0044991	300-8M0044991 8M0029482	4.5L MPI (3 UN.) 6.2L MPI (4 UN.)

DOBLE SALIDA
TWIN OUT
DOPPIA USCITA
DOUBLE SORTIE



REF	OEM	
REC806673T1	806673T1 806673T	V8 (5.0 & 5.7L)



REF	OEM	
REC3854002	898253T27 817378 817378T	4 CIL. (V6 & V8)



REF	OEM	
REC3861267	392-881732	Motores 496 Magnum 8.1 Inboard



REF	OEM	
REC3859078	392-889925	8.1L & 496 Mag (0M315053 +)



REF	OEM	
REC3861985	392-863704T 8M0054588	2001+ 4.3, 5.0, 5.7 & 6.2L EMC 0M300000+



ENCENDIDO ELECTRÓNICO — ELECTRONIC IGNITION — ACCESIONE ELETTRONICA — BOBINE D'ALLUMAGE ÉLECTRONIQUE

NO USA RESISTENCIA EXTERNA
HEI
Sistema de encendido Thunderbolt

USE WITHOUT EXTERNAL RESISTOR
HEI
Thunderbolt ignition sistem

NON UTILIZZA RESISTENZA ESTERNA
HEI
Sistema di accensione Thunderbolt

N'UTILISE PAS DE RÉSISTANCE EXTERNE
HEI
Système d'allumage Thunderbolt

REF	OEM
REC300-00879	392-805570A2 392-7803A4



USA RESISTENCIA EXTERNA
HEI
DELCO 1115202

REF	OEM
REC1463-9382	898253T24 392-806529A1 32193A2 38547

USE WITH EXTERNAL RESISTOR
HEI
DELCO 1115202

UTILIZZA RESISTENZA ESTERNA
HEI
DELCO 1115202

UTILISE UNE RÉSISTANCE EXTERNE
HEI
DELCO 1115202



MÓDULOS IGNICIÓN — IGNITION MODULES — MODULI AVVIAMENTO — MODULES D'ALLUMAGE

REF	OEM		BOBINA COIL BOBINA BOBINE
REC3858984	GM10482803	4.3, 5.0, 5.7 & 6.2L MPI ECM555 (2001+) 0M300000+	REC3861985



REF	OEM	
REC3854001	811639T	V4, V6, V8 Delco Voyager



REF	OEM	
REC3854003	811637T 811637001 81637002 811637 850487 804412 802464	4L, V6 & V8 Delco Voyager



P. 36

REF
REC004



CHAMPION

BUJÍAS SPARK CANDELE BOUGIES

	CYL	SERIE SERIAL SERIE SERIE	REF
110	4, 153 CID		CHARN5C
110	4, 153 CID		CHARV15YC4
140	4, 181 CID	-3826282	CHARN5C
140	4, 181 CID	3826283	CHARV15YC4
3.0	4, 181 CID	-0F353100	CHARV15YC4
3.0	4, 181CID	0L010042+	CHARS12YC
3.0 LX	4, 181 CID		CHARS12YC
470, 165, 170, 485, 488, 180, 190,	4, 224 CID		CHARS12YC
3.7L, 3.7LX,	4, 224 CID		CHARS12YC
140, 150, 160,	4, 224 CID		CHARS12YC
165	6, 194, 230 & 292 CID	-2771483	CHARN5C
165	6, 194, 230 & 292 CID	2771484	CHARV15YC4
200	6, 194, 230 & 292 CID		CHARN5C
185	V6, 229 CID		CHARV15YC4
175, 185, 205	V6, 262 CID		CHARV15YC4
262 MAG EFI GEN+	V6, 262 CID	0F80800-0L000000	CHARS12YC
4.3L MPI	V6, 262 CID		CHARV15YC4
4.3L	V6, 262 CID	-0F802999	CHARV15YC4
4.3LX	V6, 262 CID	0F802999+	CHARV15YC4
4.3 GEN+	V6, 262 CID	0L010065+	CHARS12YC
4.3LL EFI GEN+	V6, 262 CID	0L012009+	CHARS12YC
4.3LH GEN+	V6, 262 CID	0L010044+	CHARS12YC
4.3LX GEN+	V6, 262 CID	0F803000-0L000000	CHARS12YC
4.3LXH GEN+	V6, 262 CID	0F803000-0L000000	CHARS12YC
888 Culata | Head | Testata | Tête : 14mm FORD V8	CHARV15YC4	4169597	CHARV15YC4
233 Culata | Head | Testata | Tête : 14mm	FORD V8		CHARV15YC4
255 Culata | Head | Testata | Tête : 14mm FORD V8	CHARV15YC4	4175499	CHARV15YC4
190	V8 283, 327, 305, 350 CID		CHARJ12YC
898, 200	V8 283, 327, 305, 350 CID		CHARV9IMC
225	V8 283, 327, 305, 350 CID	2278647	CHARJ12YC
228, 230	V8 283, 327, 305, 350 CID		CHARV9IMC
250	V8 283, 327, 305, 350 CID	4768000	CHARV15YC4
255	V8 283, 327, 305, 350 CID		CHARV15YC4
260	V8 283, 327, 305, 350 CID		CHARV9IMC
280, 300 Tempest, 320 EFI	V8 283, 327, 305, 350 CID		CHARV15YC4
350 Mag (Carb)	V8 283, 327, 305, 350 CID		CHARV9IMC
350 Mag EFI/MP	V8 283, 327, 305, 350 CID	-0F602199	CHARV9IMC
350 Mag EFI GEN+ V8	CHARS12YC	0F800500+	CHARS12YC
350 Mag MPI GEN+ V8	CHARS12YC	0F602000+	CHARS12YC
350 Mag MPI GEN+ V8	CHARS12PYP	0L604000+	CHARS12PYP
377 Scorpion	V8 283, 327, 305, 350 CID	0L416146+	CHARS12YC
5.0L MPI	V8 283, 327, 305, 350 CID		CHARS12YC
5.0L	V8 283, 327, 305, 350 CID	- 0L000000	CHARV9IMC
5.0L GEN+	V8 283, 327, 305, 350 CID	0L015751	CHARS12YC
5.0L EFI GEN+	V8 283, 327, 305, 350 CID	0L012052	CHARS12YC
5.0LX	V8 283, 327, 305, 350 CID		CHARV9IMC
5.7L	V8 283, 327, 305, 350 CID	-0L000000	CHARV9IMC
5.7L EFI	V8 283, 327, 305, 350 CID	-0L000000	CHARV9IMC
5.7L GEN+	V8 283, 327, 305, 350 CID	0L010037+	CHARS12YC
5.7L EFI GEN+	V8 283, 327, 305, 350 CID	0L010035+	CHARS12YC
5.7LX, 5.7LX EFI	V8 283, 327, 305, 350 CID		CHARV9IMC
5.7LX EFI GEN+	V8 283, 327, 305, 350 CID		CHARS12YC
325	V8 427, 454 & 482 CID	3043030	CHAV63C
330, 330 (B-W), 370, 400, 400 Cyclone	V8 427, 454 & 482 CID		CHARV15YC4
420, HP425, 440 Cyclone, HP450	V8 427, 454 & 482 CID		CHARV15YC4
454 Mag Alpha, Bravo, EFI/MP/MPI	V8 427, 454 & 482 CID		CHARV15YC4
460 Cyclone, 475 Turbo, HP525 SC	V8 427, 454 & 482 CID		CHAV63C
7.4L Alpha, 7.4L Bravo	V8 427, 454 & 482 CID		CHARV15YC4
7.4L TR	V8 427, 454 & 482 CID	0B771113-0C407646	CHARV15YC4
7.4L MPI (L29)	V8 427, 454 & 482 CID	0L010003+	CHARS12YC
7.4LX EFI, 7.4LX MPI	V8 427, 454 & 482 CID		CHARV15YC4
HP465, HP500 (502 CID), HP500 EFI	V8 502, 540 & 572 CID		CHARV15YC4
HP500 Bulldog 540, HP525 SC 454	V8 502, 540 & 572 CID		CHAV63C
HP575, HP600SC Bobtail (502 CID)	V8 502, 540 & 572 CID		CHAV63C
HP800SC (572 CID)	V8 502, 540 & 572 CID		CHAV63C
502 MAG (CARB.), EFI/MA/MPI	V8 502, 540 & 572 CID		CHARV15YC4
600SC, 800SC	V8 502, 540 & 572 CID		CHAV63C





BUJÍAS SPARK CANDELE BOUGIES

	CYL	IGNITION TYPE	year	SERIE	REF	S.P GAP
100 Vazer	98/L4	Delco- HEi	2007-09	1A035000 +	NGKBR9ES	.035
110	153/ L4	Delco	1963-66	1537370 - 2044033	NGKBR6ES	.035
120	153/ L4	Delco	1964-74	1666601 - 3825578	NGKBR6ES	.035
120	153/ L4	Delco	1974-86	3825579 - 0B531853	NGKBR6FS	.035
2.5L	153/ L4	Delco	1987-89	0B531854- 0C853255	NGKBR6FS	.035
140	181/ L4	Delco	1968-74	2508261 - 3826282	NGKBR6ES	.035
140	181/ L4	Delco	1974-86	3826283 - 0B450800	NGKBR6FS	.035
3.0L	181/ L4	Delco	1987-89	0B450801 - 0C856558	NGKBR6FS	.035
3.0L	181/ L4	Prestolite	1990-91	0C856559 - 00504541	NGKBR6FS	.035
3.0L	181/ L4	Delco Digital	1990-91	0C856559 - 00504541	NGKBR6FS	.035
3.0L	181/ L4	EST	1991-94	0D504542 - 0F603999	NGKBPR6EFS	.035
3.0L	181/ L4	EST	1998	0L010042 - 0L340999	NGKBPR6EFS	.035
3.0L	181/ L4	EST	1999-16	0L341000 - 2A506300	NGKBPR6EFS	.045
3.0L MPI	181/ L4	EST	2008-16	1A072812 - 2A502810	NGKBPR6EFS	.045
3.0LX	181/ L4	Prestolite	1990-91	0C856559 - 0D504541	NGKBR6FS	.035
3.0LX	181/ L4	Delco Oigital	1990-91	0C856559 - 0D504541	NGKBPR6EFS	.035
3.0LX	181/ L4	EST	1991-97	0D504542 - 0K999999	NGKBPR6EFS	.035
165	224/ L4	Delco	1987	0B434940 - 0B77451	NGKBPR6FS	.035
170	224/ L4	Delco	1985-86	6916779 - 0B434940	NGKBPR6FS	.035
180	224/ L4	Delco & Prestolite	1987	0B436391 - 0B775248	NGKBPR6FS	.035
190	224/ L4	Delco	1985-86	6916779 - 0B436390	NGKBPR6FS	.035
3.7L	224/ L4	Delco	1988-89	0B774252+	NGKBPR6FS	.035
3.7LX	224/ L4	Delco & Prestolite	1988-89	0B775249+	NGKBPR6FS	.035
470	224/ L4	Delco	1976-84	4208730 - 6916778	NGKBPR6FS	.035
485	224/ L4	Delco	1980-82	5685394 - 6218036	NGKBPR6FS	.035
488	224/ L4	Delco	1983-84	6170297 -6916778	NGKBPR6FS	.035
140	194/ L6	Delco	1963	1538930 - 1725960	NGKBR6ES	.035
150	230/ L6	Delco	1964-66	1666495 - 2048046	NGKBR6ES	.035
160	250/ L6	Delco	1967-69	2048022 - 2770031	NGKBR6ES	.035
165	250/ L6	Delco	1970	2770032 - 2771483	NGKBR6ES	.035
165	250/ L6	Delco	1971-81	2771484 - 5813433	NGKBR6FS	.035
200	292/ L6	Delco	1969	2453769 - 2712072	NGKBR6ES	.035
185 (4 bbl.)	229/ V-6	Prestolite	1983-84	6330183 - 6919655	NGKBR6FS	.035
175	262/ V-6	Thunderbolt IV	1987	0B527955 - 0B773242	NGKBR6FS	.035
185 (2 bbl.)	262/ V-6	Thunderbolt IV	1985-87	6919656 - 0B527954	NGKBR6FS	.035
205	262/ V-6	Thunderbolt IV	1985-87	0A331455-0B775129	NGKBR6FS	.035
262 Mag.(TBI)(Gen+)	262/V-6	Delco -HEi	1996-97	0F803800 - 0K999999	NGKBPR6EFS	.045
4.3L	262/V-6	Thunderbolt IV	1988-93	0B773243 - 0F000877	NGKBR6FS	.035
4.3L	262/V-6	Thunderbolt IV	1993-96	0F000878 - 0F802999	NGKBR6FS	.040
4.3L (Gen +)	262/V-6	Thunderbolt V	1998-04	0L010044- 0W300012	NGKBPR6EFS	.045
4.3L TKS	262/V-6	Thunderbolt V	2004-15	0W300013- 2A454127	NGKBPR6EFS	.045
4.3L EFI (Gen+)(TBI)	262/V-6	Delco & Mercury - HEi	1998-01	0L012009- 0M299999	NGKBPR6EFS	.045
4.3L MPI	262/V-6	Delco - HEi	2002-16	0M300000 - 2A506375	NGKITR4A15	.060
4.3L MPI EC	262/V-6	Delco -HEi	2011-16	1A637496 - 2A528897	NGKITR4A15	.060
4.3LH (Gen +)	262/V-6	Thunderbolt IV	1998-02	0L010044- 0M614999	NGKBPR6EFS	.045
4.3LX	262/V-6	Thunderbolt IV	1988-93	08775130-0F001219	NGKBR6FS	.035
4.3LX	262/V-6	Thunderbolt IV	1993-96	0F001220 - 0F802999	NGKBR6FS	.040
4.3LX (Gen +)	262/V-6	Thunderbolt IV	1996-97	0F803000 - 0K999999	NGKBPR6EFS	.045
4.3LXH (Gen +)	262/V-6	Thunderbolt IV	1996-97	0F803000 - 0K999999	NGKBPR6EFS	.045
4.5L MPI	275/V6	Mercury	2014-21	2A441953 and up	NGKBPR5EFS-13	.051
198 MIE	305/V-8	Mallory	1977	4776402 - 4931099	NGKBR6FS	.035
200	305/V-8	Thunderbolt IV	1985-87	6899058 - 0B774444	NGKBR6FS	.035
228	305/V-8	Mallory	1977-82	4765100- 6218461	NGKBR6FS	.035
228	305/V-8	Thunderbolt IV	1983-84	6218462 - 6899268	NGKBR6FS	.035
228 MIE	305/V-8	Mallory	1977-80	4765100- 5907057	NGKBR6FS	.035
230	305/ V-8	Thunderbolt IV	1985-87	6899269 - 0B773739	NGKBR6FS	.035
230 MIE (LH)	305/ V-8	Thunderbolt IV	1981-87	5907058 - 0B788151	NGKBR6FS	.035
230 MIE (RH)	305/ V-8	Thunderbolt IV	1981-87	5907058- 0B788151	NGKBR6FS	.035
5.0L	305/ V-8	Thunderbolt IV	1988-95	0B774445 - 0F600999	NGKBR6FS	.035
5.0L (Gen+)	305/ V-8	Thunderbolt V	1998-04	0L015751 - 0W300009	NGKBPR6EFS	.045
5.0L TKS	305/ V-8	Thunderbolt V	2004-10	0W300010-1A607561	NGKBPR6EFS	.060
5.0L EFI (Gen +)	305/ V-8	Delco & Mercury- HEi	1998-01	0L012052 - 0M299999	NGKBPR6EFS	.045

	CYL	IGNITION TYPE	year	SERIE	REF	S.P GAP
5.0L MIE (LH)	305/ V-8	Thunderbolt IV	1988	0B788152 - 0C396832	NGKBR6FS	.035
5.0L MIE (RH)	305/ V-8	Thunderbolt IV	1988	0B788152 - 0C396832	NGKBR6FS	.035
5.0L MPI	305/ V-8	Delco-HEI	2002-14	0M300000 - 2A445009	NGKITR4A15	.060
5.0L MPI EC	305/ V-8	Delco-HEI	2008-14	1A300000 - 2A444777	NGKITR4A15	.060
5.0LX	305/ V-8	Thunderbolt IV	1988-95	0B773740 - 0F600999	NGKBR6FS	.035
898	305/ V-8	Mallory	1977-82	4762210- 6218461	NGKBR6FS	.035
898	305/ V-8	Thunderbolt IV	1983-84	6218462 - 6899057	NGKBR6FS	.035
250	350/ V-8	Mallory	1977	4768000 - 4908849	NGKBR6FS	.035
255 MCM & MIE (GM)	350/ V-8	Mallory & Mercury	1975-76	3258728 - 4767999	NGKBR6FS	.035
260	350/ V-8	Mallory	1978-82	4908850- 6218461	NGKBR6FS	.035
260	350/ V-8	Thunderbolt IV	1982-87	6218462 - 0B773304	NGKBR6FS	.035
260 MIE (LH)	350/ V-8	Thunderbolt IV	1981-87	5907058- 0B788151	NGKBR6FS	.035
260 MIE (RH)	350/ V-8	Thunderbolt IV	1981-87	5907058- 0B788151	NGKBR6FS	.035
280 TRS	350/ V-8	Mercury	1975	4176250 - 4499390	NGKBR6FS	.035
280 TRS	350/ V-8	Mallory	1976	4499391 - 4770199	NGKBR6FS	.035
300	350/ V-8	Thunderbolt IV	1985-86	6668677 - 0B430367	NGKBR6FS	.035
320 EFI	350/ V-8	Thunderbolt IV	1987-89	0A543604-0C622418	NGKBR6FS	.035
350 Mag. Alpha	350/ V-8	Thunderbolt IV & V	1986-97	0A635178 - 0K999999	NGKBR6FS	.035
350 Mag. Alpha EFI (Gen+)	350/ V-8	Delco-HEI	1996	0K001509-0K999999	NGKBPR6EFS	.045
350 Mag. Bravo MPI	350/ V-8	Delco-HEI	1995	0F415189 - 0F601999	NGKBR6FS	.035
350 Mag. Bravo MPI (Gen+)	350/ V-8	Delco- HEi	1996-97	0F602000 - 0K999999	NGKBPR6EFS	.045
350 Mag. EFI Ski	350/ V-8	Delco- HEi	1994-97	0F215561-0K999999	NGKBPR6EFS	.045
350 Mag. MPI (Gen+)	350/ V-8	Delco- HEi	1998	0L010019 -0L325952	NGKBPR6EFS	.045
350 Mag. MPI (Gen+)	350/ V-8	Mercury-HEI	1999-01	0L325953 - 0M299999	NGKBPR6EFS	.045
350 Mag. MPI	350/ V-8	Delco-HEI	2002-5	0M300000 - 2A455872	NGKITR4A15	.060
350 Mag. MPI EC	350/ V-8	Delco-HEI	2008-15	1A300000 - 2A455878	NGKITR4A15	.060
350 Mag. MPI Horizon	350/ V-8	Delco-HEI	2002-07	0M300000 +	NGKITR4A15	.060
350 Mag. MPI Horizon MIE	350/ V-8	Mercury-HEI	1999-01	0L304700 - 0M299999	NGKTR5IX	.045
350 Mag. MPI Horizon MIE	350/ V-8	Delco- HEi	2002-07	0M300000 - 1A089999	NGKITR4A15	.060
350 Mag. MPI MIE (Gen+)	350/ V-8	Delco- HEi	1998	0L002008 - 0L302199	NGKBPR6EFS	.045
350 Mag. MPI MIE (Gen+)	350/ V-8	Mercury-HEI	1998-01	0L302200 - 0M299999	NGKBPR6EFS	.045
350 Mag. MPI MIE	350/ V-8	Delco-HEI	2002-07	0M300000 - 1A089999	NGKITR4A15	.060
350 Mag. MPI Ski	350/ V-8	Delco-HEI	1995-96	0F350583 - 0F799999	NGKBR6FS	.035
350 Mag. MPI Ski (Gen+)	350/ V-8	Delco-HEI	1998	0L002600 - 0L304599	NGKBPR6EFS	.045
350 Mag. MPI Ski (Gen+)	350/ V-8	Mercury-HEI	1999-01	0L304600 - 0M299999	NGKBPR6EFS	.045
350 Mag. MPI Ski	350/ V-8	Delco-HEI	2002-07	0M300000 - 1A089999	NGKITR4A15	.060
350 Mag. Ski	350/ V-8	Thunderbolt IV& V	1991-97	0D505450 - 0K999999	NGKBR6FS	.035
5.7L	350/ V-8	Thunderbolt IV& V	1988-97	0B773305 - 0K999999	NGKBR6FS	.035
5.7L (Gen+)	350/ V-8	Thunderbolt V	1998-04	0L010037 - 0W300754	NGKBPR6EFS	.045
5.7L TKS	350/ V-8	Thunderbolt V	2004-09	0W300755-1A600136	NGKBPR6EFS	.060
5.7L EFI	350/ V-8	Delco-HEI	1995-97	0F225560 - 0K999999	NGKBR6FS	.035
5.7L EFI (Gen +)	350/ V-8	Delco & Mercury - HEi	1998-01	0L010035 - 0M299999	NGKBPR6EFS	.045
5.7L EFI MIE (Gen+)	350/ V-8	Delco- HEi	1997	0K040300 - 0K999999	NGKBPR6EFS	.045
5.7L MIE (LH)	350/ V-8	Thunderbolt IV	1988-93	0B788152 - 0F024999	NGKBR6FS	.035
5.7L MIE (RH)	350/ V-8	Thunderbolt IV	1988-93	0B788152 - 0F024999	NGKBR6FS	.035
5.7L MIE	350/ V-8	Thunderbolt IV	1993-95	0F025000 - 0K999999	NGKBR6FS	.035
5.7L MIE (Gen+)	350/ V-8	Thunderbolt V	1998-04	0L002003 - 0W090899	NGKBPR6EFS	.045
5.7L MIE TKS	350/ V-8	Thunderbolt V	2004-10	0W090900 - 1A092388	NGKBPR6EFS	.060
5.7L MPI Horizon MIE	350/ V-8	Delco-HEI	2008-15	1A090000- 2A455371	NGKITR4A15	.060
5.7L MPI MIE	350/ V-8	Delco-HEI	2008-15	1A090000 - 2A455523	NGKITR4A15	.060
5.7L MPI MIE EC	350/ V-8	Delco-HEI	2008-16	1A090000- 2A455371	NGKITR4A15	.060
5.7L MPI Tow Sports	350/ V-8	Delco-HEI	2008-16	1A090000 - 2A455977	NGKITR4A15	.060
5.7L MPI Tow Sports EC	350/ V-8	Delco-HEI	2008-15	1A090000 - 2A452508	NGKITR4A15	.060
5.7LSki	350/ V-8	Prestolite & Mallory	1985-95	0A338553-0F775199	NGKBR6FS	.035
5.7LSki	350/ V-8	Thunderbolt IV& V	1987-97	0B514627 - 0K999999	NGKBR6FS	.035
5.7LSki	350/ V-8	Thunderbolt V	1998-04	0L002005 - 0W090899	NGKBPR6EFS	.045
5.7L Ski TKS	350/ V-8	Thunderbolt V	2004-11	0W090900 - 1A092837	NGKBPR6EFS	.060
5.7LX	350/ V-8	Thunderbolt V	1996-97	0F601000 - 0K999999	NGKBR6FS	.035
5.7LX Bravo EFI (Gen +)	350/ V-8	Delco-HEI	1996-97	0F800300 - 0K999999	NGKBPR6EFS	.045
5.7LX EFI	350/ V-8	Delco- HEi	1996-97	0F752400 - 0K999999	NGKBR6FS	.035
Black Scorpion Ski (Gen+)	350/ V-8	Delco-HEI	1996-02	0F800000 - 0M391599	NGKBPR6EFS	.045
Black Scorpion Ski (Gen+)	350/ V-8	Delco-HEI	2003-07	0M391600 - 0W698432	NGKITR4A15	.060
Scorpion 350	350/ V-8	Delco- HEi	2008-15	0W698433 - 2A460164	NGKITR4A15	.060
Scorpion 350 EC	350/ V-8	Delco- HEi	2008-15	0W698433 - 2A460148	NGKITR4A15	.060

	CYL	IGNITION TYPE	year	SERIE	REF	S.P GAP
377 Mag	377/ V-8	Delco-HEI	2008-15	1A300000 - 2A455858	NGKITR4A15	.060
377 Mag EC	377/ V-8	Delco-HEI	2008-15	1A300000 - 2A455601	NGKITR4A15	.060
377 Scorpion MCM	377/ V-8	Delco- HEi	1999-05	0L416146 - 0M907201	NGKBPR6EFS	.045
377 Scorpion Ski	377/ V-8	Delco -HEi	1997-98	0K000656 - 0L600314	NGKBPR6EFS	.045
6.2L MPI (Mercury)	377/ V-8	Mercury	2015-21	2A456613 +	NGKBPR5EFS-13	.051
MX 6.2L MPI	377/ V-8	Mercury-HEI	2000-01	0L680003 - 0M299999	NGKBPR6EFS	.045
MX 6.2L MPI	377/ V-8	Delco -HEi	2002-07	0M300000 - 1A299999	NGKITR4A15	.060
MX 6.2L MPI Horizon	377/ V-8	Delco -HEi	2002-07	0M300000 +	NGKITR4A15	.060
MX 6.2L MPI Horizon MIE	377/ V-8	Delco -HEi	2002-15	0M300000 - 2A452368	NGKITR4A15	.060
MX 6.2L MPI MIE	377/ V-8	Mercury-HEI	1999-01	0L670000 - 0M299999	NGKBPR6EFS	.045
MX 6.2L MPI MIE	377/ V-8	Delco -HEi	2002-07	0M300000 +	NGKITR4A15	.060
6.2L MPI MIE EC	377/ V-8	Delco -HEi	2008-15	1A090000 - 2A455246	NGKITR4A15	.060
MX 6.2L MPI Ski	377/V-8	Delco -HEi	2002-07	0M317000 - 0W689999	NGKITR4A15	.060
MX 6.2L Blk Scorpion Ski	377/V-8	Delco -HEi	2001-02	0L670015- 0M391599	NGKBPR6EFS	.045
MX 6.2L Blk Scorpion Ski	377/V-8	Delco -HEi	2003-07	0M391750 - 0W698432	NGKITR4A15	.060
Scorpion 377	377/ V8	Delco -HEi	2008-15	0W698433 - 2A460138	NGKITR4A15	.060
Scorpion 377 HO EC	377/V-8	Delco-HEI	2009-10	1A091488-1A092170	NGKITR4A15	.060
330 MCM& MIE	454/V-8	Malklry	1977-81	4623115-6083144	NGKBR6FS	.035
330	454/V-8	Thunderbolt IV	1982-87	6083145- 0B816540	NGKBR6FS	.035
340 MIE	454/V-8	Thunderllolt IV	1981-87	5889914 - 0B788365	NGKBR6FS	.035
370 TRS	454/V-8	Halley	1978-85	4883520 - 6721527	NGKBR6FS	.035
370 TRS	454/V-8	Thunderbolt IV	1985-87	6721528 - 0B714586	NGKBR6FS	.035
400 TRS	454/V-8	Halley	1980-86	5668232 - 0B457644	NGKBR6FS	.035
420	454/V-8	Thunderllolt IV	1987-89	0A398941 - 0B622418	NGKBR6FS	.035
425	454/V-8	Thunderllolt IV	1990-93	0B622419- 0D937011	NGKBR6FS	.035
440 TRS	454/ V-8	Halley	1983-86	6181070- 0B485220	NGKBR6FS	.035
450	454/ V-8	Thunderllolt IV	1995-96	0F347100- 0F347277	NGKBR6FS	.035
454 Mag. Alpha	454/ V-8	Thunderllolt IV	1986-88	0A631894- 0B785148	NGKBR6FS	.035
454 Mag. Bravo	454/ V-8	Thunderllolt IV	1988-97	0B721206- 0K999999	NGKBR6FS	.035
454 Mag. EFI	454/ V-8	Delco- HEi	1994-96	0F115700 - 0F802349	NGKBR6FS	.035
454 Mag. EFI Ski	454/ V-8	Delco- HEi	1995-96	0F215800 - 0F820099	NGKBR6FS	.035
454 Mag. MPI	454/ V-8	Delco- HEi	1996-01	0F802350 - 0M024999	NGKBR6FS	.040
454 Mag. MPI Horizon MIE	454/ V-8	Delco- HEi	1998-01	0L002200 - 0L674000	NGKBR6FS	.040
454 Mag. MPI Ski	454/ V-8	Delco- HEi	1996-97	0F820100 - 0K999999	NGKBR6FS	.040
525 SC	454/ V-8	Thundertiolt IV	1991-99	0D456000- 0L415623	NGKBR6FS	.035
7.4L Bravo	454/ V-8	Thundertiolt IV	1988-97	0B771113- 0K999999	NGKBR6FS	.035
7.4L EFI MIE	454/ V-8	Delco- HEi	1996-97	0F874815 - 0K999999	NGKBR6FS	.035
7.4L MIE	454/ V-8	Thunderllolt IV& V	1981-97	5889914 - 0K999999	NGKBR6FS	.035
7.4L MPI (L29)	454/ V-8	Delco- HEi	1998-01	0L010003 - 0M024330	NGKBPR6EFS	.045
7.4L MPI MIE	454/ V-8	Delco-HEI	1995-97	0F563052 - 0K999999	NGKBR6FS	.035
7.4L MPI MIE (L29)	454/ V-8	Delco- HEi	1998-01	0L002006 - 0L674613	NGKBPR6EFS	.045
7.4LX Bravo EFI	454/ V-8	Delco- HEi	1996-97	0F820000 - 0K999999	NGKBR6FS	.035
7.4LX Bravo MPI	454/ V-8	Delco-HEI	1996-97	0F602010 - 0K999999	NGKBR6FS	.035
496 Mag & HO	496/ V-8	Delco	2001-10	0M025000 - 1A352731	NGKPZTR5A-15	.060
496 Mag & HO EC	496/ V-8	Delco	2008-10	1A066166 - 1A350440	NGKPZTR5A-15	.060
8.1S& HO MIE	496/ V-8	Delco	2001-10	0M026000 - 1A380318	NGKPZTR5A-15	.060
8.1S& HO MIE EC	496/ V-8	Delco	2008-10	0W697154-1A380251	NGKPZTR5A-15	.060
500	502/ V-8	Thunderllolt IV	1994-98	0F213293-0L001772	NGKBR6FS	.035
500 (Gen+)	502/ V-8	Thunderllolt IV	1999	0L414639 - 0L601036	NGKBR6FS	.035
500 EFI	502/ V-8	Delco- HEi	1998-05	0L001477 +	NGKBR6FS	.035
502 Mag.	502/ V-8	Thundertiolt IV	1990-93	0C878221 - 0F114528	NGKBR6FS	.035
502 Mag. EFI	502/ V-8	Delco-HEI	1993-96	0D840650 - 0F802599	NGKBR6FS	.035
502 Mag. MPI	502/ V-8	Delco- HEi	1996-01	0F802600 - 0M024999	NGKBR6FS	.040
525 EFI	502/ V-8	Mercury- HEi	2003-21	0M900146 +	NGKBPR6ES	.035
600 SC	502/V-8	Thunderbolt IV	1991-93	0D456489 - 0D763875	NGKBR6FS	.035
8.2L Mag	502/V-8	Mercury- HEi	2010-21	1A351597 +	NGKBPR6ES	.060
8.2L Mag EC	502/V-8	Mercury- HEi	2010-21	1A350340 +	NGKBPR6ES	0.60
8.2L MIE	502/V-8	Thunderbolt IV & V	1990-96	0C878221 - 0F819629	NGKBR6FS	0.35
8.2L MIE	502/V-8	Mercury - HEI	2010-21	1A350802+	NGKBPR6ES	0.60
8.2L MIE EC	502/V-8	Mercury - HEI	2010-21	1A350802 +	NGKBPR6ES	0.60
8.L MPI MIE	502/V-8	Delco- HEi	1996-01	0F819620 - 0L674200	NGKBR6FS	0.40
500 Bulldog	540/ V-8	Thunderbolt IV	1990-96	0C577003 - 0F745405	NGKBR6FS	0.35
500 Bulldog	540/ V-8	Thunderbolt IV	1997-01	0K000248 - 0M050281	NGKBR6FS	0.40



JUEGOS DE CABLES, ALTO RENDIMIENTO

Núcleo del cable de Kevlar de 8 mm antimagnético. Funda de silicona amarilla. Terminales bujías con muelle de acero inox. Terminal del distribuidor de cobre. Terminales bobina. Silicona resistente a altas temperaturas. Garantía de 5 años.

HD SPARK PLUG WIRE SET

Antimagnetic Kevlar core. Yellow silicone boot & jacket. SS snaplock. Brass distributor terminal. Coil terminals. High resistant silicone. 5 year warranty.

KIT CAVI CANDELE, ALTE PRESTAZIONI

Nucleo del cavo di Kevlar da 8 mm antimagnetico. Copertura di silicone gialla. Terminali candele con molle di acciaio inox. Terminale lato spinterogeno in rame. Terminale Bobine. Silicone resistente alle alte temperature. Garanzia di 5 anni.

KIT FAISCEAU DE BOUGIE

Noyau en Kevlar antimagnétique. Gaine en silicone jaune.Bornes de bougie d'allumage avec ressort en acier inoxydable. Terminal de distribution en laiton. Bornes de bobine. Silicone haute résistance. Garantie de 5 ans.

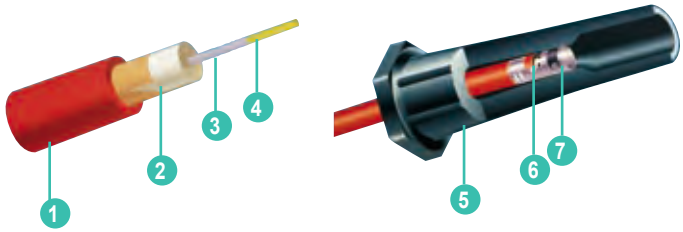

1	Camisa de silicona de 8 mm	8 mm silicone jacket	Rivestimento in silicone da 8 mm	Gaine silicone de 8mm
2	Látex resistente altas temperaturas	Heat resistant latex	Latex resistente alle alte temperature	Latex résistant à haute température
3	Acero inox	Stainless Steel	Acciaio inox	Acier inox
4	Núcleo de Kevlar	Kevlar core	Nucleo de Kevlar	Noyau de Kevlar
5	Capuchón de silicona	Silicone jacket	Rivestimento in silicone	Capuchon en silicone
6	Trenzado especial fibra de vidrio	Fiberglass braiding	Fibra di vetro	Tresse en fibre de verre
7	Terminal de acero inox	Stainless Steel terminal	Terminale di acciaio inox	Terminal en acier inox

	ARRANQUE IGNITION AVVIAMENTO DEMARRAGE			
	CYL	CONVEN.	ELECT.	REF	OEM
110/120/2.5L 140/3.0L	4	✓		REC15-401	84-813720A5
120/2.5L 140/3.0L 3.0LX	4		✓	REC15-405	84-813720A13
140-185(EN LINEA 6)	6	✓		MAG15-602	84-813720A8 84-816761Q8
165-180 LX/470- 485 190 (3.7L)	4	✓		REC15-402	84-813720A5
175/185 (228, 262) 4.3L (GENI)	6		✓	REC15-601	84-813720A11
185 (229)	6	✓		REC15-604	84-813720A7 84-816761Q7
180 (GM)	8	✓		REC15-801	84-813720A8 84-813720A10
200/5.0L (GM)	8		✓	REC15-804	84-813720A4 84-818781A4 84-8167681A17 84-813720A3
4.3L 2002 + MPI	6		✓	REC15-606	
215-225S 223FORD 22S-228GM	8	✓		REC15-801	84-813720A8 84-813720A10
228-230/5.0L LX (GM)	8		✓	REC15-804	84-813720A4 84-816761A4 84-816878A17 84-813720A3
255 (FORD) 250-225-225-280(GM)	8	✓		REC15-801	84-813720A8 84-813720A10
5.0L GENE+ 2002+ MPI	8		✓	REC15-815	84-816608A1
350 (5.7L) MAG., SKI	8		✓	REC15-804	84-813720A2 84-816781A4 84-816761A17 84-813720A3
5.7L GENE+ 2002+ MPI	8		✓	REC15-815	84-816608A1
270/280/350 (GM)	8	✓		REC15-801	84-813720A8 84-813720A10
300MR/TRS (GM)	8		✓	REC15-804	84-816761A2 84-816781A15 84-816761A6 84-816761A15
260/320/325 /330/340 (GM)	8		✓	REC15-804	84-813720A4 84-816781A4 84-816761A17 84-813720A3
370/380/400/ 440/460 TRS	8	✓		REC15-801	84-813720A8 84-813720A10
420/425/486 /525/575	8		✓	REC15-804	84-816761A2 84-816781A15 84-816761A8 84-816761A15
454/500/502 MAG BRAVO	8		✓	REC15-804	84-816761A2 84-816781A15 84-816761A8 84-816761A15

	ARRANQUE IGNITION AVVIAMENTO DEMARRAGE			
	CYL	CONVEN.	ELECT.	REF	OEM
888 (FORD) 898,198 (GM)	8	✓		REC15-801	84-813720A8 84-813720A10
888 (GM) 5.7 BRAVO	8		✓	REC15-804	84-816761A2 84-816781A15 84-816761A8 84-816761A15
5.7 SKI	8	✓		REC15-801	84-813720A9 84-813720A10
7.4L BRAVO	8		✓	REC15-804	84-816761A2 84-816781A15 84-816761A8 84-816761A15
7.4L 8.2L CON HURTH	8		✓	REC15-804	84-816761A2 84-816781A15 84-816761A8 84-816761A15
300 MR/TRS (GM)	8		✓	REC15-804	84-816761A2 84-816781A15 84-816761A6 84-816761A15
330-340 (GM)	8		✓	REC15-804	84-816761A2 84-816781A15 84-816761A6 84-816761A15
454 MAG BRAVO 420/425/465 /525/575	8		✓	REC15-804	84-816761A2 84-816781A15 84-816761A6 84-816761A15
898 (GM) 5.7 BRAVO	8		✓	REC15-804	84-816761A2 84-816781A15 84-816761A6 84-816761A15
500/502 BRAVO	8		✓	REC15-804	84-816761A2 84-816781A15 84-816761A6 84-816761A15
500/502 BRAVO	8		✓	MAG15-803	84-816761A2 84-816781A15 84-816761A6 84-816761A15
7.4L BRAVO 7.4L-8.2L CON HURTH	8		✓	REC15-804	84-816761A2 84-816781A15 84-816761A6 84-816761A15
7.4L BRAVO 7.4L-8.2L CON HURTH	8		✓	REC15-804	84-816761A2 84-816781A15 84-816761A6 84-816761A15
6.2L MPI MIE	8		✓	REC15-813	84-863656A1
454 MAGNUM			✓	MAG15-809	
8.1L 496			✓	REC15-808	

DISTRIBUIDOR DISTRIBUTOR SPINTEROGENO ALLUMEUR

TAPA DISTRIBUIDOR DISTRIBUTOR CAPS CALOTTE SPINTEROGENO TÊTE D'ALLUMEUR

REF	OEM	
REC33708	33708	Delco V8



REF	OEM	
REC33765T	33765T 33765	Delco 6 Cil



REF	OEM	
REC982209	391-5075 391-5075Q1 F16900148	Mallory V8

Tapa alta
High cap
Calotta alta
Couvercle haute



REF	OEM	
REC392-9086T	392-9086 392-9086T	Prestolite V6



REF	OEM	
REC835702	392-6318 392-6318T FI6900184	Prestolite V8

Con clip
with clip
con clip
Avec clip



REF	OEM	
REC392-9766	392-9766 392-9766Q1 392-9766T FI6900185	Prestolite V8

Con tornillo
with nut
con chiusura a vite
Avec vis



REF	OEM		ROTOR ROTOR ROTORE DOIGT D'ALLUMEUR
REC3854548	808483T3 808483 804483T 804418	Delco V8 E. elect.	REC3854549



REF	OEM	
REC393-4988	393-4988 393-3230 393-4988T 393-4988T2	Autolite 8 Cyl



REF	OEM	
REC805759Q01	805759Q01 805759A2 805759A1 90746A1 805759A5 805759T2 805759T1 16457A4 805759T2 43557A1 43557	Merc. V8



REF	OEM	
REC815407A2	815407A2 13753A2 815407Q02	Merc. V6



REF	OEM	
REC985218		(1987-90) Ford 2.3L Mallory



REF	OEM		ROTOR ROTOR ROTORE DOIGT D'ALLUMEUR
REC3854331	850484T2 850484T 850484	Delco V6 E. elect.	REC3854311



REF	OEM		ROTOR ROTOR ROTORE DOIGT D'ALLUMEUR
REC3854260	811635T3	Delco 4 cil 3.0LX	REC3854261



REF	OEM	
REC393-9459Q1	393-9459Q1 393-3230 393-4988T 393-4988T2	Delco 4 Cil



REF	OEM		ROTOR ROTOR ROTORE DOIGT D'ALLUMEUR
REC898253T23	888731 898253T23	4.3L Vortec V6 MPI	REC898253013



REF	OEM		ROTOR ROTOR ROTORE DOIGT D'ALLUMEUR
REC898253T22	884792 898253T22	Vortec V8 MPI Modernos | Late | Moderna | Modernes	REC898253013



ROTORES — ROTORS — ROTORI — DOIGT D'ALLUMEUR

REF	OEM	
REC898253013	898253013 884790 8M6001222	Vortec V6 & V8 MPI



REF	OEM			
REC8M6001252	898253009 8M6001252	GM V8 HEI 1998+	MPI	555 ECM



REF	OEM	
REC65864	65864 78016	Autolite V8 Mercury



REF	OEM	
REC3853801	392-9089 392-9767 392-9089T 392-9089Q FI6900186 FI6900190	Presolite V6 & V8



REF	OEM	
REC3854549	8M6001253 808484 8084841 898253010	Delco V8 E. eléc.



REF	OEM	
REC58217	58217 898253008 58217Q 8M6001251	Delco 4 & 6 Cil



REF	OEM	
REC89825302	391-5088 391-7057 898253029 391-7057T 8M6001224 FI6901224	Mallory V8



REF	OEM	
REC834975	392-6326 392-6326T FI6900044	Prestolite V8



REF	OEM	
REC3854311	850485 8504851 898253012 8M0062084 804424	Delco V6



REF	OEM	
REC3854261	811636 8M6001254 8116361 898253011	Delco 4 cil. 3.0LX



TRIGGERS (ROTOR + SENSOR) — TRIGGERS (ROTOR + SENSOR WHEEL) — TRIGGER (ROTORE + SENSORE) — KIT DOIGT D'ALLUMAGE

REF	OEM	
REC13524A6	13524A6 13524Q06 13524A4 19405A4 90576A4	Merc. V6



REF	OEM	
REC13524A1	13524A1 13524T1 13524A5	Merc. V8



PLATINOS — POINTS — PUNTINE — VIS PLATINEES

REF	OEM	
REC8M6001219	392-898253005 392-6325 8M6001219 FI6900031	Prestolite



REF	OEM	
REC33700	33700	Delco



REF	OEM	
REC34235T	34235 34235T	Delco



REF	OEM	
REC58033	58033 898253007	Autolite



REF	OEM	
REC391-5090	391-5090 391-898253004 8M6001250	Mallory



REF	OEM	
REC71831	87-71831 64850	Mercury



CONDENSADORES — CONDENSERS — CONDENSATORI — CONDENSATEUR

REF	OEM	
REC8M6001249	392-6324 392-898223002 8M6001249 FI6900023 FI6900032 FI69000083 FI6900189	Prestolite V8



REF	OEM	
REC8M6001217	391-5092 391-898253001 391-5093 8M6001217 FI6900040	Mallory V8, Delco 4 & 6 Cil.



REF	OEM	
REC33662	33662 898253003 6325 898253005 33662Q 8M6001218 FI6900031	Delco 4 & 6 Cil.



REF	OEM	
REC33706	33706	Delco V-8



REF	OEM	
REC64851	81-64851 58034	Autolite



KITS DE ENCENDIDO — TUNE UP KITS — KIT D'ACCENSIONE — KITS D'ALLUMAGE

REF	OEM	
REC3423A1	34235A1 34235Q1	Delco 4 & 6 cil.



REF	OEM	
REC391-5090Q1	391-5090A1 391-5090Q1	Mallory V8



REF	OEM	
REC801766	801766	Delco V8



REF	OEM	
REC801767	801767	Merc. V8



REF	OEM	
REC801768	801768	Autolite 8 Cil



REF	OEM	
REC392-6324Q1	392-6324A1 392-6324Q1 392-6324T1	Prestolite V6 & V8



REF	OEM	
REC392-6325Q1	392-6325A1 392-6325Q1 392-6325T1	Prestolite V8



GUÍA KITS DE ENCENDIDO — IGNITION APPLICATION GUIDE — GUIDA KIT ACCENSIONE — GUIDE KITS D'ALLUMAGE

MOD.	CYL	AÑO YEAR ANNO ANNÉE	SERIE SERIAL SERIE SERIE	ARRANQUE IGNITION ACCENSIONE ALLUMAGE	KIT	PLATINO POINT PUNTINE VIS PLATINÉES	CONDENSADOR CONDENSER CONDENSATORE CONDENSATEURS	ROTOR ROTOR ROTORE DOIGT D'ALLUM.
L4								
110	L-4	1963-66	1537370-2044033	Delco	REC3423A1	REC34235T	REC33662	REC1396-5238
120	L-4	1964-74	1666601-3825578	Delco	REC3423A1	REC34235T	REC33662	REC1396-5238
120/2.5L	L-4	1974-89	3825579-0C853255	Delco	REC3423A1	REC34235T	REC33662	REC1396-5238
140	L-4	1968-74	2508261-3826282	Delco	REC3423A1	REC34235T	REC33662	REC1396-5238
140/3.0L	L-4	1974-89	3826283-0C856558	Delco	REC3423A1	REC34235T	REC33662	REC1396-5238
3.0L/LX	L-4	1990-95	0C856559-0F603999	Prestolite	REC392-6324Q1	REC8M6001219	REC8M6001249	REC3853801
165/3.7L	L-4	1987-89	0B434940+	Delco	REC3423A1	REC34235T	REC33662	REC1396-5238
170	L-4	1985-86	6916779-0B434940	Delco	REC3423A1	REC34235T	REC33662	REC1396-5238
180/3.7LX	L-4	1987-89	0B436391+	Delco	REC3423A1	REC34235T	REC33662	REC1396-5238
180/3.7LX	L-4	1987-89	0B436391+	Prestolite	REC392-6324Q1	REC8M6001219	REC8M6001249	REC3853801
190	L-4	1985-86	6916779-0B436390	Delco	REC3423A1	REC34235T	REC33662	REC1396-5238
470	L-4	1976-84	4208730-691778	Delco	REC3423A1	REC34235T	REC33662	REC1396-5238
485	L-4	1980-82	5685394-6218036	Delco	REC3423A1	REC34235T	REC33662	REC1396-5238
488	L-4	1983-84	6170297-6916778	Delco	REC3423A1	REC34235T	REC33662	REC1396-5238
Prestolite	L-4				REC392-6324Q1	REC8M6001219	REC8M6001217	REC3853801
L6								
140	L-6	1963	1538930-1725960	Delco	REC3423A1	REC34235T	REC33662	REC1396-5238
150	L-6	1964-66	1666495-2048046	Delco	REC3423A1	REC34235T	REC33662	REC1396-5238
160	L-6	1967-69	2048022-2494926	Delco	REC3423A1	REC34235T	REC33662	REC1396-5238
160	L-6	1969	2494927-2770031	Delco	REC3423A1	REC34235T	REC33662	REC1396-5238
165	L-6	1971-81	2771484-5813433	Delco	REC3423A1	REC34235T	REC33662	REC1396-5238
165	L-6	1970	2770032-2771483	Delco	REC3423A1	REC34235T	REC33662	REC1396-5238
200	L-6	1969	2453769-2712072	Delco	REC3423A1	REC34235T	REC33662	REC1396-5238
Prestolite	L-6				REC392-6324Q1	REC8M6001219	REC8M6001249	REC3853801
V6								
185 (4 BBL.) (3.8L)	V-6	1983-84	6330183-6919655	Prestolite	REC392-6324Q1	REC8M6001219	REC8M6001249	REC3853801
V8								
190 (GM 283)	V-8	1963-64	1564539-1730903	Delco	REC801766			
215 MCM y MIE (Ford 302)	V-8	1970-72	2781153-3563181	Autolite	REC801768	REC3302-804844002	REC64851	REC65864
215 MCM y MIE (Ford 302)	V-8	1970-72	2781153-3562181	Mallory	REC391-5090Q1	REC391-5090	REC8M6001217	REC89825302
225 MCM y MIE	V-8	1973-74	3385721-4166999	Autolite	REC801768	REC3302-804844002	REC64851	REC65864
225 MCM y MIE	V-8	1973-74	3385721-4166999	Mallory	REC391-5090Q1	REC391-5090	REC8M6001217	REC89825302
225 MCM y MIE	V-8	1973-74	3385721-4166999	Mercury	REC801767	REC71831	REC64851	REC65864
888 (Ford 302)	V-8	1971-77	3108723-4887829	Mercury	REC801767	REC71831	REC8M6001217	REC65864
888 (Ford 302)	V-8	1971-77	3108723-4887829	Prestolite	REC392-6325Q1	REC8M6001219	REC8M6001249	REC834975
888 (Ford 302)	V-8	1971-77	3108723-4887829	Mallory	REC391-5090Q1	REC391-5090	REC8M6001217	REC89825302
888 (Ford 302)	V-8	1971-77	3108723-4887829	Autolite	REC801768	REC3302-804844002	REC64851	REC65864
225 (GM 327)	V-8	1963-69	1539620-2694014	Delco	REC801766			
228 MCM & MIE	V-8	1977-82	4765100-6218461	Mallory	REC391-5090Q1	REC391-5090	REC8M6001217	REC89825302
898/198 MCM & MIE	V-8	1977-82	4762210-6218461	Mallory	REC391-5090Q1	REC391-5090	REC8M6001217	REC89825302

MOD.	CYL	AÑO YEAR ANNO ANNÉE	SERIE SERIAL SERIE SERIE	ARRANQUE IGNITION ACCENSIONE ALLUMAGE	KIT	PLATINO POINT PUNTINE VIS PLATINÉES	CONDENSADOR CONDENSER CONDENSATORE CONDENSATEURS	ROTOR ROTOR ROTORE DOIGT D'ALLUM.
233 MCM & MIE	V-8	1975-77	4173000-4902304	Mercury	REC801767	REC71831	REC64851	REC65864
233 MCM & MIE	V-8	1975-77	4173000-4902304	Prestolite	REC392-6325Q1	REC8M6001219	REC8M6001249	REC834975
233 MCM & MIE	V-8	1975-77	4173000-4902304	Prestolite	REC392-6324Q1	REC8M6001219	REC8M6001249	REC3853801
250 (GM 350)	V-8	1977	4768000-4908849	Mallory	REC391-5090Q1	REC391-5090	REC8M6001217	REC89825302
255 MIE y MCM (Ford 351)	V-8	1973-80	3258728-5907057	Mallory	REC391-5090Q1	REC391-5090	REC8M6001217	REC89825302
255 MCM y MIE (Ford 351)	V-8	1973-80	3258728-5907057	Mercury	REC801767	REC71831	REC64851	REC65864
255 (GM 350)	V-8	1975-76	3258728-4501254	Mallory	REC391-5090Q1	REC391-5090	REC8M6001217	REC89825302
255 (GM 350)	V-8	1976	4498701-4767999	Mercury	REC801767	REC71831	REC64851	REC65864
260	V-8	1978-82	4908850-6128461	Mallory	REC391-5090Q1	REC391-5090	REC8M6001217	REC89825302
5.7L Ski	V-8	1985-95	0A338533-0F775199	Mallory	REC391-5090Q1	REC391-5090	REC8M6001217	REC89825302
5.7L Ski	V-8	1985-95	0A338533-0F775199	Prestolite	REC392-6324Q1	REC8M6001219	REC8M6001249	REC3853801
280 TRS	V-8	1975	4176250-4499390	Mercury	REC801767	REC71831	REC64851	REC65864
280 TRS	V-8	1976	4499391-4770199	Mallory	REC391-5090Q1	REC391-5090	REC8M6001217	REC89825302
330 MCM y MIE	V-8	1977-81	4623115-6083144	Mallory	REC391-5090Q1	REC391-5090	REC8M6001217	REC89825302
370 TRS	V-8	1978-85	4179554-6721527	Mallory	REC391-5090Q1	REC391-5090	REC8M6001217	REC89825302
370 TRS	V-8	1978-85	4883520-6721527	Holley	REC801767	REC71831	REC64851	REC65864
400 TRS	V-8	1980-86	5668232-0B457644	Mallory	REC391-5090Q1	REC391-5090	REC8M6001217	REC89825302
400 TRS	V-8	1980-86	5668232-0B457644	Holley	REC801767	REC71831	REC64851	REC65864
440 TRS	V-8	1983-86	6181070-0B485220	Mallory	REC391-5090Q1	REC391-5090	REC8M6001217	REC89825302
440 TRS	V-8	1983-86	6181070-0B485220	Holley	REC801767	REC71831	REC64851	REC65864
460 TRS	V-8	1983-86	6180970-6181046	Mallory	REC391-5090Q1	REC391-5090	REC8M6001217	REC89825302
460 TRS	V-8	1983-86	6180970-6181046	Holley	REC801767	REC71831	REC64851	REC65864

KITS DE CONVERSIÓN ELECTRÓNICO

Sustituyen condensadores y contactos por componentes electrónicos. Usa bobina, tapa y rotor estandard. Fácil instalación, una pieza y dos cables. Precisión entre 1/4" calibrado de 0 a 8000 rpm.

ELECTRONIC CONVERSION KITS

To subsitute condensers for electronic devices. Uses standard.coil, cap & rotor. Easy installation; one piece, two cables. Precisely calibrated between 1/4" from 0 to 8000.

KIT DI CONVERSIONE ELETTRICO

Sustituisce condensatori e contatti per componenti eletronici. Ulizza bobina, calotta e rotore standard. Facile installazione, una pz e due cavi. Precisione 1/4" calibrato da 0 a 8000.

KITS DE CONVERSION ÉLECTRONIQUE

Remplace les condensateurs et les contacts par des composants électroniques. Utilise une bobine, un couvercle et un rotor standard. Installation facile, une seule pièce et deux fils. Précision de 1/4" calibrée de 0 à 8000 rpm.

REF
REC26900 GM 4 cil.



REF
REC26905 PRESTOLITE V8
(tornillo | screw | vite | vis)



REF
REC26904 8 cyl. MALLORY YL / YD



REF
REC26901 6 cyl. DELCO



GUÍA KITS DE CONVERSIÓN ELECTRÓNICO

ELECTRONIC CONVERSION KIT APPLICATION

GUIDA KIT CONVERSIONE ELETTRICO

GUIDE KITS DE CONVERSION ÉLECTRONIQUE

MOD.	CYL	SERIE SERIAL SERIE SERIE	ARRANQUE IGNITION ACCENSIONE ALLUMAGE	⊘	KIT
470R	4	6218037	Delco		REC26900
485	4	5685394	Delco		REC26900
488R	4	6170297	Delco		REC26900
140	6	1538930 - 1725960	Delco		REC26901
150	6	1666495 - 2048046	Delco		REC26901
160	6	2048022 - 2770031	Delco		REC26901
165	6	2770032	Delco		REC26901
Alpha 1/120-140	6	6229718	Delco		REC26901
200	6	2453769 - 2712072	Delco		REC26901
198	8	4776402	Mallory	YL670AV	REC26904
215	8	2781153	Mallory	YL670AV	REC26904
225	8	3385721	Mallory	YL670AV	REC26904
228	8	4765100 - 6218461	Mallory	YL670AV	REC26904
233	8	4173000	Prestolite		REC26905

MOD.	CYL	SERIE SERIAL SERIE SERIE	ARRANQUE IGNITION ACCENSIONE ALLUMAGE	⊘	KIT
233	8	4173000	Prestolite (tornillo | screw | vite | vis)		REC26905
198	8	4776402	Mallory	YL670AV	REC26904
250	8	4768000 - 4908849	Mallory	YL670AV	REC26904
255	8	3258728	Mallory	YL670AV	REC26904
260	8	4908850 - 6218461	Mallory	YL670AV	REC26904
260	8	A338553+	Mallory	YL670AV	REC26904
280	8	4499391	Mallory	YL670AV	REC26904
330	8	4623115	Mallory	YL670AV	REC26904
370, 400, 440, 460TRS	8	4179554	Mallory	YL670AV	REC26904
888	8	3108723	Mallory	YL670AV	REC26904
888	8	3108723	Prestolite		REC26905
888	8	4762210 - 6218461	Mallory	YL670AV	REC26904
5.7	8	85B14627+	Ski Mallory	YL670AV	REC26904

DELCO VOYAGER®

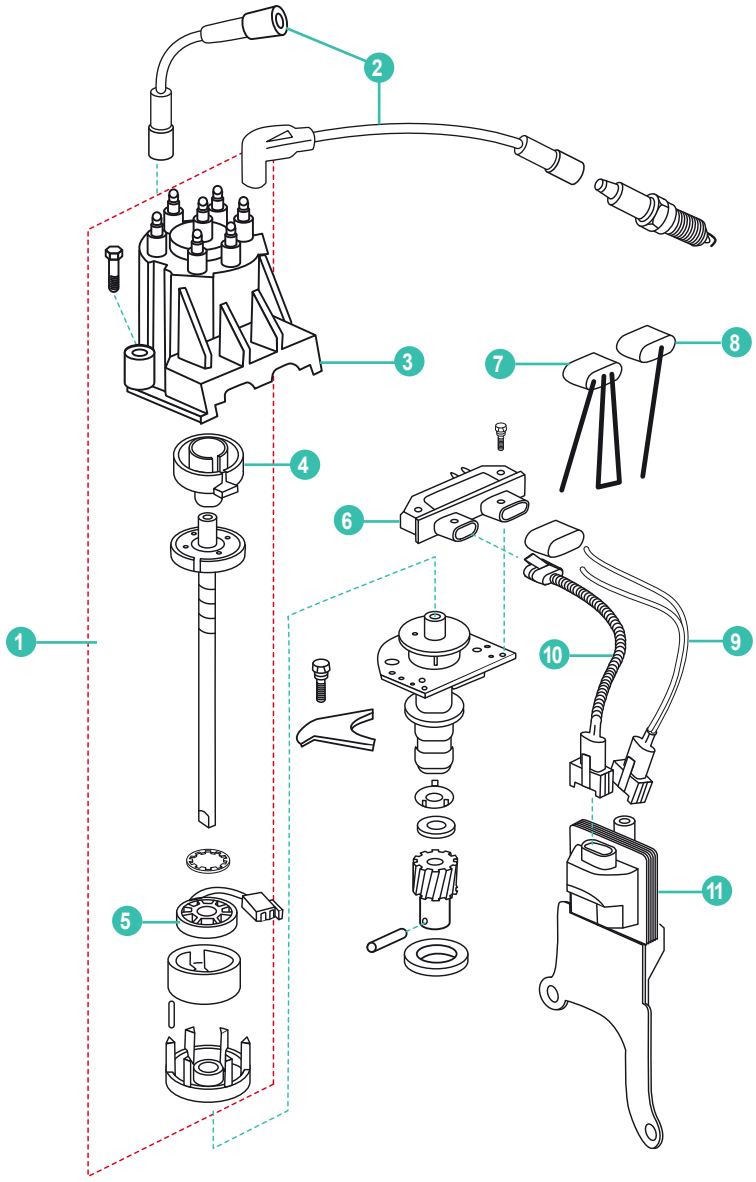

	REF	OEM				
	REC817377	817377	DISTRIBUIDOR 4 CYL	DISTRIBUTOR 4 CYL	DISTRIBUTORE 4 CYL	DISTRIBUTEUR 4 CYL.
1	REC807964A1	807964A1	DISTRIBUIDOR 6 CYL	DISTRIBUTOR 6 CYL	DISTRIBUTORE 6 CYL	DISTRIBUTEUR 6 CYL.
	REC805222A1	805222A1	DISTRIBUIDOR 8 CYL	DISTRIBUTOR 8 CYL	DISTRIBUTORE 8 CYL	DISTRIBUTEUR 8 CYL.
	REC15-405	84-816761Q13	KIT CABLE ARRANQUE: 3.0L	IGNITION WIRE SET: 3.0L	KIT CAVI INIEZIONE: 3.0L	KIT CÂBLE ALLUMAGE 3.0L
2	REC15-601	84-816761Q16	KIT CABLE ARRANQUE: V6	IGNITION WIRE SET: V6	KIT CAVI INIEZIONE: V6	KIT CÂBLE ALLUMAGE V6
	REC15-804	84-816761Q17	KIT CABLE ARRANQUE: V8	IGNITION WIRE SET: V8	KIT CAVI INIEZIONE: V8	KIT CÂBLE ALLUMAGE V8
	REC3854260	3854260	TAPA 4 CYL	CAP 4 CYL	COPERCHIO 4 CYL	COUVERCLE 4 CYL
3	REC3854331	3854331	TAPA 6 CYL	CAP 6 CYL	COPERCHIO 6 CYL	COUVERCLE 6 CYL
	REC3854548	3854548	TAPA 8 CYL	CAP 8 CYL	COPERCHIO 8 CYL	COUVERCLE 8 CYL
	REC3854311	850485	ROTOR V6	ROTOR V6	ROTORE V6	DOIGT D'ALLUMAGE V6
4	REC3854549	8M6001253	ROTOR V8	ROTOR: V8	ROTORE: V8	DOIGT D'ALLUMAGE V8
	REC3854261	8M6001254	ROTOR 4 CYL	ROTOR 4 CUL	ROTORE 4 CYL	DOIGT D'ALLUMAGE 4 CYL
5	REC3854001	811639T	MÓDULO IMPULSOS	MODULE	MODULO	MODULE
6	REC3854003	811637001	MÓDULO DISTRIBUIDOR	MODULE: DISTRIBUTOR	MODULO DISTRIBUZIONE	MODULE DISTRIBUTEUR
7	REC91-888863	91-888863	HERRAMIENTA DISTRIBUIDOR	TOOL: TIMING	STRUMENTO DISTRIBUZIONE	TIMING JUMPER ALLUMAGE
8	REC294005		CABLE: INTERRUPTOR	WIRE: SHIFT INTERUPTER	CAVO: INTERRUTTORE	FAISCEAU POUR SHIFT INTERRUPTEUR
9	REC500442		CABLE: BOBINA	WIRE LEAD: COIL HARNESS	CAVO BOBINA	FAISCEAU POUR BOBINE
10	REC84-817376T01	84-817376T01	CABLE: DISTRIBUIDOR - BOBINA	WIRE LEAD: DISTRIBUTOR - COIL	CAVO: DISTRIBUZIONE - BOBINA	FAISCEAU DISTRIBUTEUR - BOBINE
11	REC3854002	898253T27	BOBINA ARRANQUE	COIL: IGNITION	BOBINA INIEZIONE	BOBINE D'ALLUMAGE

THUNDERBOLT IV & V

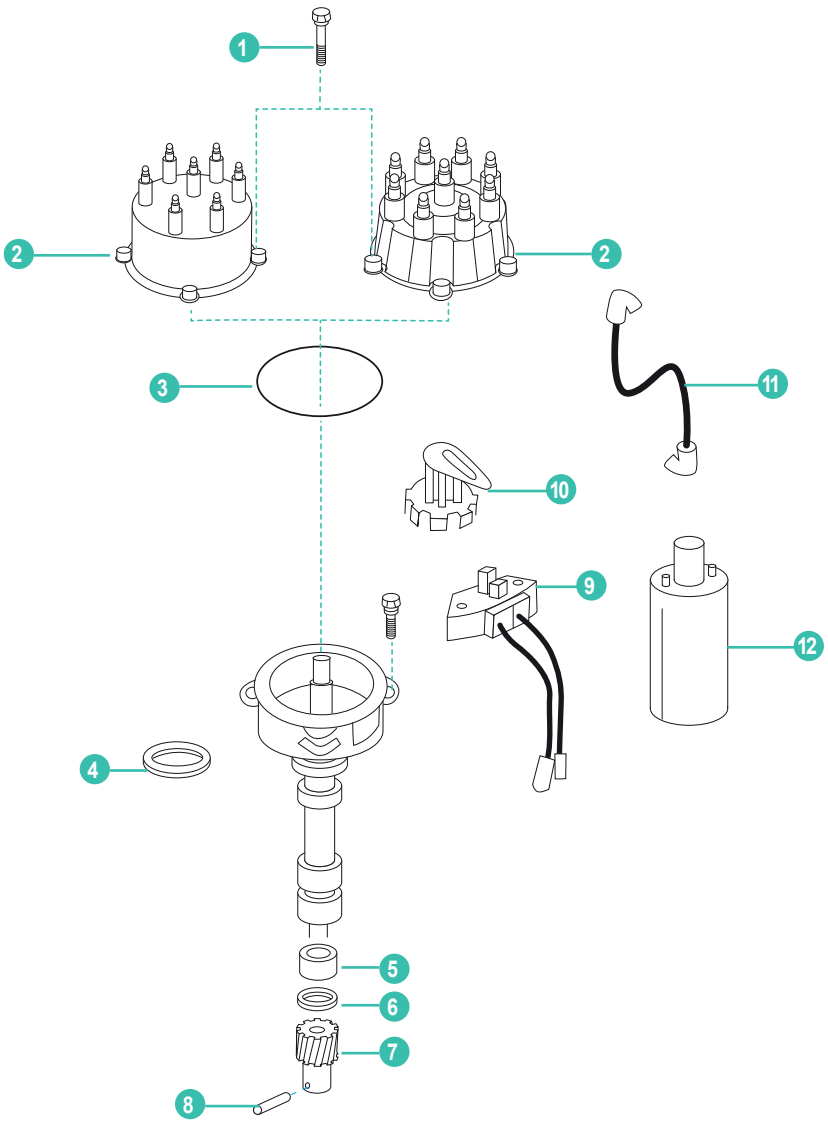

	REF	OEM				
	REC805185A3	805185A37	DISTRIBUIDOR V6 CON TERMINAL	DISTRIBUTOR ASSY. V6 W/BULLET	SPINTEROGENO V6 CON TERMINALI	DISTRIBUTEUR V6 AVEC TERMINAL
	REC805185A36	805185A36	DISTRIBUIDOR V8 CON TERMINAL	DISTRIBUTOR ASSY. V8 W/BULLET	SPINTEROGENO V8 CON TERMINALI	DISTRIBUTEUR V8 VEC TERMINAL
1	REC10-90926	10-90926	TORNILLO	SCREW	VITE	VIS
2	REC815407A2	815407Q02	TAPA DISTRIBUIDOR V6	DISTRIBUTOR CAP V6	CALOTTA V6	TÊTE D'ALLUMEUR V6
	REC805759Q01	805759Q01	TAPA DISTRIBUIDOR V8	DISTRIBUTOR CAP V8	CALOTTA V6	TÊTE D'ALLUMEUR V8
3	REC27-805760	27-805760	JUNTA	GASKET	GUARNIZIONE	JOINT
4	REC27-344861	27-34486-3	JUNTA	GASKET	GUARNIZIONE	JOINT
5	REC23-90915	23-90915	CASQUILLO	BUSHING	BOCCOLA	BAGUE
6	REC12-90931	12-90931	ARANDELA	WASHER	RONDELLA	RONDELLE
7	REC43-818807	43-818807	PIÑÓN DELCO	DRIVE GEAR	PIGNONE DELCO	PIGNON D'ALLUMEUR
8	REC17-47617	17-47617	PASADOR	PIN	CHIAVISTELLO	PIN
9	REC87-892150Q02	87-892150Q02	MÓDULO DISTRIBUIDOR	SENSOR ASSEMBLY	MODULO SPINTEROGENO	MODULE DISTRIBUTEUR
10	REC13524A6	13524Q06	ROTOR V6	ROTOR ASSEMBLY V6	ROTORE V6	DOIGT D'ALLUMAGE V6
	REC13524A1	13524T1	ROTOR V8	ROTOR ASSEMBLY V8	ROTORE V8	DOIGT D'ALLUMAGE V8
11	REC15-601	84-816761Q16	KIT CABLES BUJÍAS V6	WIRES KIT V6	KIT CAVI V6	FAISCEAU BOUGIES V6
	REC15-804	84-816761Q17	KIT CABLES BUJÍAS V8	WIRES KIT V8	KIT CAVI V8	FAISCEAU BOUGIES V8
12	REC300-00879	392-805570A2	BOBINA	COIL	BOBINA	BOBINE

MPI V6 & V8

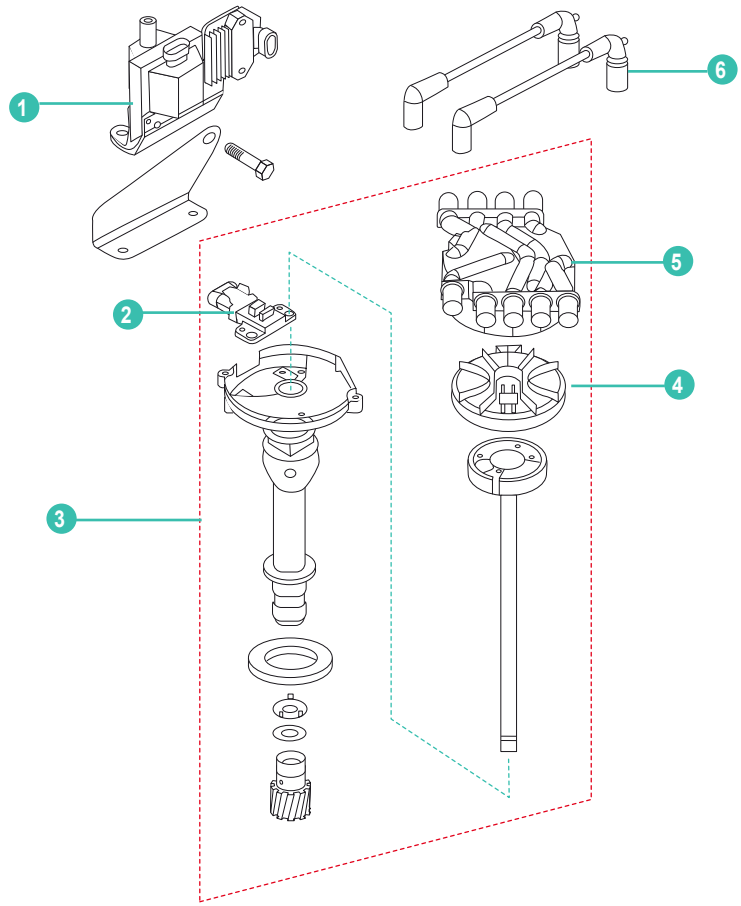

	REF	OEM				
1	REC3861985	392-8M0054588	BOBINA ENCENDIDO	IGNITION COIL	BOBINA INIEZIONE	BOBINE D'ALLUMAGE
2	REC3863130	898141	SENSOR POSICIÓN ÁRBOL DE LEVAS	DISTRIBUTOR PICK-UP	SENSORE POSIZIONE ALBERO A CAMME	SONDE POSITION ARBRE À CAMES
3	REC40005334	888751A03	DISTRIBUIDOR V6	DISTRIBUTOR V6	DISTRIBUTORE V6	DISTRIBUTEUR V6
	REC21622232	879150A87	DISTRIBUIDOR V8	DISTRIBUTOR V8	DISTRIBUTORE V8	DISTRIBUTEUR V8
4	REC898253013	8M6001222	ROTOR	ROTOR	ROTORE	DOIGT D'ALLUMAGE
5	REC898253T23	898253T23	TAPA V6	CAP V6	COPERCHIO V6	COUVERCLE V6
	REC898253T22	898253T22	TAPA V8	CAP V8	COPERCHIO V8	COUVERCLE V8
6	REC15-606	84-863656A2	KIT CABLES V6	WIRES KIT V6	KIT CAVI V6	FAISCEAU V6
	REC15-815	84-816608A1	KIT CABLES V8 (5.0L, 5.7L)	WIRES KIT V8 (5.0L, 5.7L)	KIT CAVI V8 (5.0L, 5.7L)	FAISCEAU V8 (5.0, 5.7L)
	REC15-813	84-863656A1	KIT CABLES V8 (6.2L)	WIRES KIT V8 (6.2L)	KIT CAVI V8 (6.2L)	FAISCEAU V8 (6.2L)

DISTRIBUIDOR DISTRIBUTOR SPINTEROGENO DISTRIBUTEUR

REF	OEM		
REC40005334	888751A03 88751A02 888751A1	Vortec V6 4.3l MPI (2002+) (0M300000+)	REC15-606

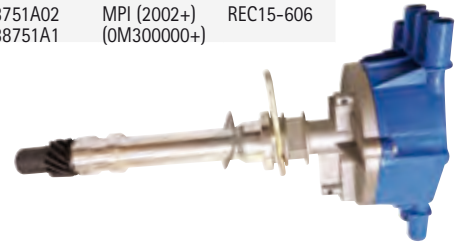

REF	OEM		
REC17177A1	17177A1 91823A3 816148A1 74905A3 68521A4 68521A3 13447A1	GM V8. (Small & large block) MALLORY YL 624 AV	REC15-801



REF	OEM		
REC21622232	884794A02 879150A87 884794A1	Vortec V8 2001+ 5.0L, 5.7L, 6.2L MPI (0M300000 +)	REC15-815

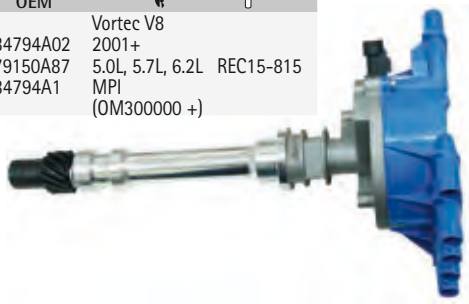

REF	OEM		
REC392-6316	392-6316	FORD 302 CID V8 MALLORY YL512CV	REC15-801



REF	OEM		
REC195141	87581T 195141 87581 62424 58231 52352 33266	GM 4 CIL. (120 & 140) MALLORY YL673AV	REC15-401



REF	OEM		
REC392-6330	392-6330	FORD 351 CID V8 MALLORY YL554CV	REC15-801

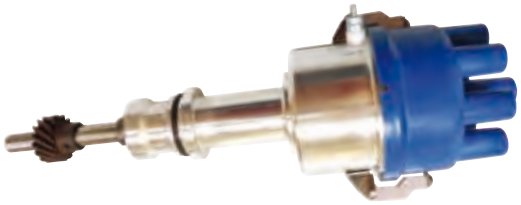

DISTRIBUIDOR ELECTRÓNICO — ELECTRONIC DISTRIBUTOR

REF	OEM		
REC805185A3	805185A3	Vortec V6 4.3l MPI (20A V6. HEI Modernos | Late | Moderno | Modernes)	REC15-604



SPINTEROGENO ELETTRICO — DISTRIBUTEUR ELECTRONIQUE

REF	OEM		
REC805185A36	805185A36	V8. (HEI Modernos | Late | Moderno | Modernes)	REC15-801



REF	OEM		
REC817377	817377 817377T	181 RX (LX - MPI) Delco est ignition	REC15-405



REF	OEM			
REC805222A1	805222A1	V8 (EFI - TBI - MPI) 262-454 & 452	384 / 409	REC15-804



REF	OEM		
REC807964A1	807964A1 907964A1	V6 (EFI - TBI)	REC15-601

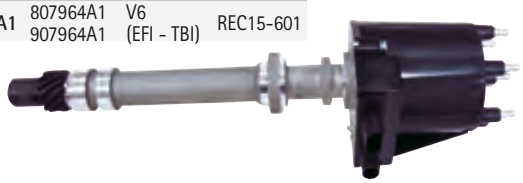

SISTEMA DE REFRIGERACIÓN
COOLING SYSTEM
SISTEMA DI RAFFREDDAMENTO
SYSTÈME DE REFROIDISSEMENT

TERMOSTATO — THERMOSTAT — TERMOSTATO — THERMOSTAT

KIT CUERPO DE TERMOSTATO — THERMOSTAT HOUSINGS KIT — KIT CORPO TERMOSTATO — KIT CORPS DE THERMOSTAT

REF	OEM	
REC87290A23	87290A26	V6 & V8 BLOQUE PEQUEÑO SMALL BLOCKS BLOCCO PICCOLO BLOQUE PETIT
REC90736A24	90736A24	V6 & V8 BLOQUE GRANDE BIG BLOCKS BLOCCO GRANDE BLOQUE GRAND

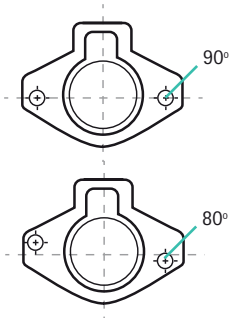



NOTA: reemplaza a este cuerpo
NOTE: replaces this housing
NOTA: sostituisce questo modello
REMARQUE : remplace ce corps



CUERPOS TERMOSTATO — THERMOSTATO HOUSING — CORPO TERMOSTATO — CORPS DE THERMOSTAT

REF	OEM	
BAMC29-47587	861493A07 47587A2 47587 861493A3	GM 153, 181, 250, 292, 120, 140, 2.5L, 3.0, 3.0LX (4 cyl) (1964-97) 160, 165, 200 (6 cyl) (1967-81)



REF	OEM	
REC78984A08	78984A08 78984A1	198 MIE (2 bbl) GM 305 V8 (1977) 228, 228 MIE (4 bbl) GM 305 V8 (1977-80) 225 MIE GM 350 V-8 (1979-80) 260 (4 bbl) GM 350 V-8 (1978-82) 898 (2 bbl) GM 350 V-8 (1977-82)



REF	OEM	
REC87290A4	87290A4	4.3L V6 (1983-92) 5.0 & 5.7L V8 (1981-95) Race sterndrive GM454, 502 & 540 (1986-96)



REF	OEM	
BAMC29-78985	78985A1	330 GM454 V8 (1977-81)



REF	OEM	
RM863457A2	863457A2	4.3L, 350 MAG, 5.0L, 6.2L (MPI & MX)

Todos los motores de inyección con 1 o 3 puntos de drenaje.
All Injection with 1 or 3 point drain system.
Tutti i motori ad iniezione con 1 o 3 punti di drenaggio.
Tous les moteurs à injection avec 1 ou 3 points de vidange.



REF	OEM	
REC55131A5	55131A5	V6 & V8 con circuito de agua cerrado. with raw water cooling system. con circuito di acqua chiuso. avec circuit d'eau fermé.



REF	OEM	
BAMC29-63588	889333 63588A1	FORD V8 302 (1971-77) 351 (1973-77)



ACERO INOXIDABLE

Con cola Bravo. Incluye kit de casquillos para adaptarse a cualquier colector.

STAINLESS STEEL

With Bravo sterndrive. Includes bushing kit to fit any manifold.

ACCIAIO INOX

Con piede Bravo. Il kit include boccole per adattarsi a qualsiasi collettore.

ACIER INOXYDABLE

Avec l'embase Bravo. Comprend un kit de bagues pour s'adapter à n'importe quel collecteur.

REF	OEM	
REC8M0061381	861006A1 8M0061381 860256A4	GM V6 & V8 (305, 350, 357, 383) 4.3, 5.0, 5.7, 6.2L 7.4 & 8.2L (1998+)





CASQUILLO TERMOSTATO

THERMOSTAT SLEEVE

BOCCOLA TERMOSTATO

CALE DE THERMOSTAT

REF	OEM	
REC23-806922	23-806922	Para la mayoría de 3.0L, V6, V8 Fits most 3.0L, V6, V8 Si adatta maggiormente 3.0L, V6, V8 Pour la plupart des 3.0L, V6, V8



VÁLVULA "T" TERMOSTATO | TEE VALVE ASSY | VALVOLA "T" TERMOSTATO | TE VALVE THERMOSTAT

REF	OEM		CUERPO DE TERMOSTATO THERMOSTAT HOUSING CORPO TERMOSTATO CORPS THERMOSTAT
REC22-98477A2	22-98477A2	GM V6 & V8	REC87290A4



EJE VÁLVULA TERMOSTATO | CHECK BALL KIT | ASSE VALVOLA TERMOSTATO | AXE VALVE THERMOSTATIQUE

REF	OEM	
REC30-98475T1	30-98475T1	MCM R/MR/ALPHA ONE (1983-90)



MÓDULO DISTRIBUCIÓN DE AGUA | WATER DISTRIBUTION MODULE | MODULO DISTRIBUZIONE ACQUA | MODULE DE DISTRIBUTION D'EAU

REF	OEM	
RM863631T1	863631T1	GM 4.3, 5.0, 5.7 & 6.2L (MPI)

Drenaje manual
Manual drain
Drenaggio manuale
Drainage manuel



REF	OEM	
RM863444T1	863444T1	GM 4.3, 5.0, 5.7 & 6.2L (MPI)

Varilla accionada
Rod actuated
Asta azionata
Tige motrice



new

REF	OEM	
REC863802T2	863802T2	V6 & V8 AIR ACTUATED DRAIN

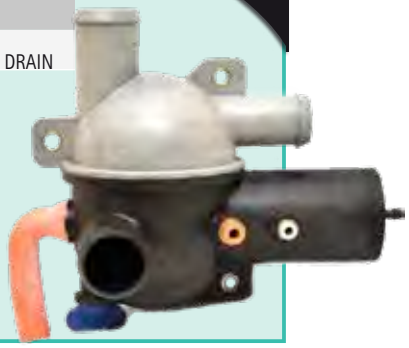

CONECTOR RÁPIDO | FITTING | CONNETTORE | RACCORD VIDANGE

new

REF	OEM	
REC22-862225	22-862225	4 CYL INLINE V6 & V8



CUBIERTAS TERMOSTATO — THERMOSTATO COVER — COPERCHIO TERMOSTATO — COUVERCLE DE THERMOSTAT

REF	OEM	CUERPO HOUSING CORPO CORPS	
BAMC29-60372	60372A1 60372A2 861493A07	BAMC29-47587	4 & 6 cyl inline



REF	OEM	CUERPO HOUSING CORPO CORPS	
REC8M0061068	47442A1	BAMC29-78985	454, 502, V8 BIG BLOCK



REF	OEM	CUERPO HOUSING CORPO CORPS		
BAMC29-62898	62898A1 62898	BAMC29-63588	FORD V8 (302, 351)	Con colas With sterndrive Con Piede Avec embases
BAMC29-59498	59498 59498A1	BAMC29-63588		Con Eje With Shaft Con asse Avec arbre



REF	OEM	CUERPO HOUSING CORPO CORPS	
REC47441A1	47441A1	REC87290A4	262 V6 / 305, 350 V8 SMALL BLOCK



JUNTAS TERMOSTATO — THERMOSTATO GASKETS — GUARNIZIONI TERMOSTATO — JOINTS DE THERMOSTAT

REF	OEM	CASQUILLO SLEEVE BOCCOLA BAGUE
REC25-30224	25-30224	REC23-806922
REC27-47510Q	27-47510Q	REC23-47508T



REC25-30224



REC27-47510Q

CUERPO TERMOSTATO --> CULATA — THERM. HOUSING --> CYLINDER HEAD — CORPO TERMOSTATO --> TESTATA — CORPS THERMOSTAT --> TÊTE MOTEUR

REF	OEM	CUERPO HOUSING CORPO CORPS	
REC27-8146801	27-8146801	BAMC29-47587	4 & 6 cyl inline



JUNTA TAPA --> CUERPO TERM. — COVER --> THERMOSTAT HOUSING — COPERCHIO --> CORPO TERM. — JOINT COUVERCLE --> CORPS THERM.

REF	OEM
REC27-33179Q02	27-33179Q02



REF	OEM
REC17494A1	17494A1

Tapa y junta
Cover & gasket
Coperchio e guarnizione
couvercle et joint



DEPOSITO --> CUERPO TERM. — TANK --> THERMOSTAT HOUSING — SERBATOIO --> CORPO TERM. — DEPOSIT --> CORPS THERM.

REF	OEM	
REC27-74830	27-74830	MCM 470 3.7L (1976-82)



BY-PASS --> TERMOSTATO | BY-PASS --> THERMOSTAT HOUSING | BY-PASS --> TERMOSTATO | BY-PASS --> THERMOSTAT

REF	OEM	
REC27-41812Q	27-41812Q 27-41812	GM V6 / V8 SMALL BLOCK
REC27-418122	27-418122	GM 454 / 502 V8 BIG BLOCK
REC27-48818Q01	27-48818Q01	GM V8, SMALL & BIG BLOCK
REC27-475901	27-47590-1	4 & 6 cyl inline
REC27-60208Q	27-60208	Ford 302 / 351


REC27-41812Q


REC27-418122


REC27-48818Q01


REC27-475901


REC27-60208Q

CUERPO TERM. --> COL. ADMISIÓN | THERM. HOUSING --> INTAKE MANIFOLD | CORPO TERM. --> COL. ASPIRAZIONE | CORPS THERM. --> COL. ADMISION

REF	OEM	
REC27-53045Q01	27-53045Q01 53051	GM V6 & V8
REC27-33918	27-8M2021920	GM 4 & 6 cyl inline
REC27-54506	27-5450	FORD 302/351
REC27-89656-1	27-89656-1	MCM 470 3,7 L (1976-82)


REC27-53045Q01


REC27-33918


REC27-54506

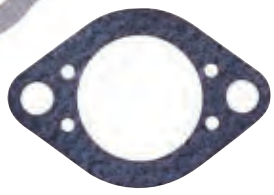
REC27-89656-1

DIESEL

TERMOSTATO | THERMOSTATO | TERMOSTATO | THERMOSTAT

REF	OEM	
REC8M0093561	8M0093561 879194215 879194233 879194231 896332148	CMD 2,8 / 4.2



new

REF	OEM	
REC8M0093480	8M0093480 8M0067292 8M0066646	TDI 3.0L



new

GAS

KITS TERMOSTATO | THERMOSTATO KIT | KIT TERMOSTATO | KITS THERMOSTAT

REF	OEM		ºC
REC59078Q3	59078Q3	4 & 6 CYL INLINE	60º



REF	OEM		ºC
REC864493	864493	4.3L CARB ALPHA / BRAVO 4.3L MPI ALPHA / BRAVO 4.5L MPI (FRESH WATER) 350 MAG MPI ALPHA / BRAVO 357 HRZ 377 MAG MPI 5.0L MPI ALPHA / BRAVO 5.7L MPI 6.2L MPI	80º



REF	OEM		°C
REC8M0091470	807252T2 8M0091470	GM V6 & V8, 181° Modelos modernos Late models Modelli moderni Modèles modernes	70°



REF	OEM		°C
REC807252Q5	807252Q5	GM V6 & V8° Modelos modernos Late models Modelli moderni Modèles modernes	70°



REF	OEM		°C
REC807252Q3	807252Q3	FORD V8	60°



REF	OEM		°C
REC99155T2	99155T2	4 cyl 224 (3.7L)	70°

Motores con colector escape de aluminio y circuito de refrigeración cerrado.
Engines with closed cooling & aluminum exhaust manifold
Motori con circuito di refrigerazione chiuso e colettore di scarico in alluminio
Moteurs avec collecteur d'échappement en aluminium et circuit de refroidissement fermé.



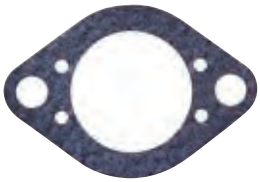

REF	OEM		°C
REC8M0089715	807252T1 8M0089715	GM V6 & V8, Ford V8 4.5L MPI (RAW WATER) 6.2L MPI (RAW WATER)	60°



REF	OEM		°C
REC807252Q4	807252Q4 807252T4	GM V6 & V8 4.5L MPI (RAW WATER) 6.2L MPI (RAW WATER)	60°



INTERCAMBIADOR DE CALOR | HEAT EXCHANGER | SCAMBIATORE DI CALORE | ÉCHANGEUR DE CHALEUR

Para saber cual es la ref.que comprende a su motor, informar del modelo de motor y nº de serie

To know which is the model you need, please inform the model and serial number of the engine.

Per sapere il modello corretto, fornire all'assistenza clienti il numero di serie del motore.

Pour savoir quelle est la référence de votre moteur, veuillez indiquer le modèle et le numéro de série du moteur.

REF	OEM
RM99438A1	99438A1



KITS INTERCAMBIADOR | HEAT EXCHANGER KITS | KIT SCAMBIATORI | KITS ÉCHANGEUR

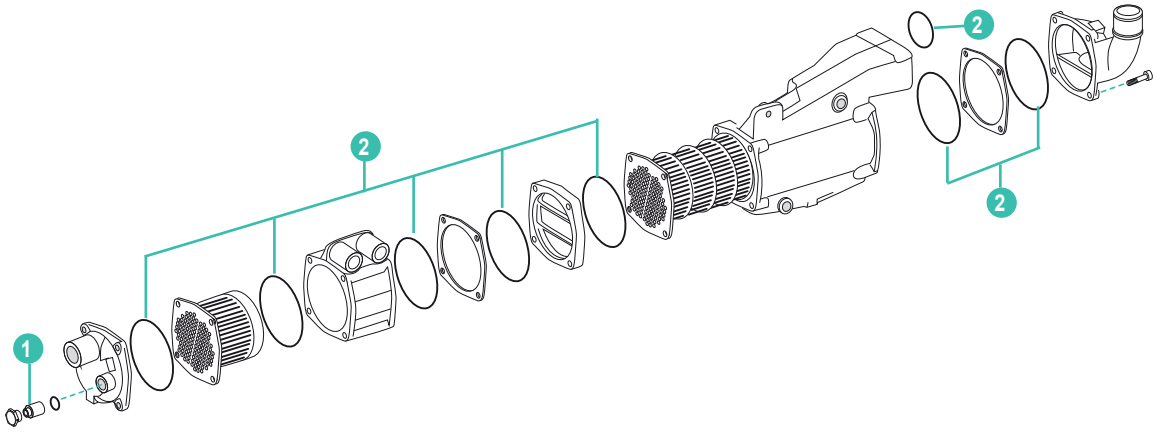

new

2	OEM		
REC32126	25-896332126 25-89633	CMD, CMQSD 2.8 CMQSD4.2	8

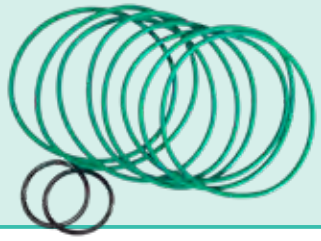

1	OEM
TEN01320T	



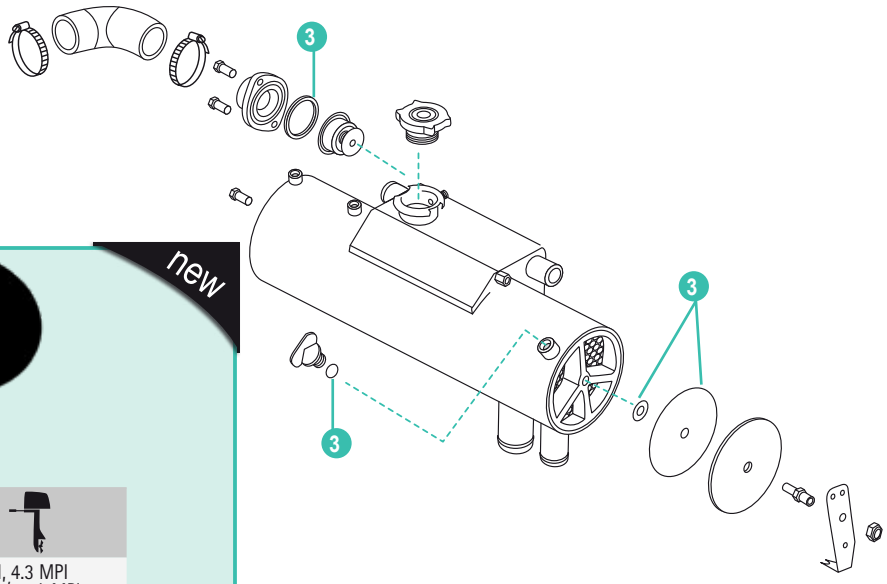

new

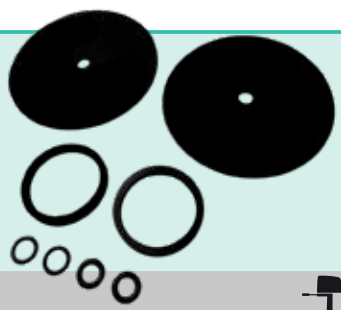

3	OEM	
REC25-8M0084884	8M0084884 25-8M0039163 25-8071341 25-26802	4.5L MPI, 4.3 MPI 350 MPI / 5.0L MPI 383 MAG/MPI 6.2L MPI

ENFRIADOR DE ACEITE | OIL COOLER | RAFFREDDAMENTO DELL'OLIO | REFROIDISSEUR D'HUILE

Para saber cual es la ref.que comprende a su motor, informar del modelo de motor y nº de serie

To know which is the model you need, please inform the model and serial number of the engine.

Per sapere il modello corretto, fornire all'assistenza clienti il numero di serie del motore.

Pour savoir quelle est la référence de votre moteur, veuillez indiquer le modèle et le numéro de série du moteur.

REF	OEM
RM807371T1	807371T1
REC99356A2	99356A2
RM99356A1	99356A1
REC89690T	89690T



KITS ENFRIADOR DE ACEITE | OIL COOLER KITS | KIT GUARNIZIONE RAFFREDAMENTO OLIO | KIT JOINT REFROIDISSEUR D'HUILE

new

2	OEM	
REC879194185	879194185	CMDQSD 2.8 & 4.2

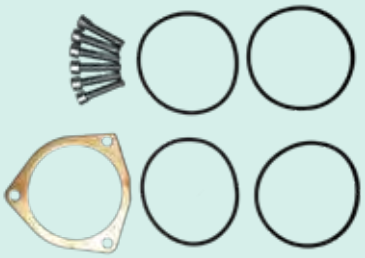

1	OEM
REC895207	



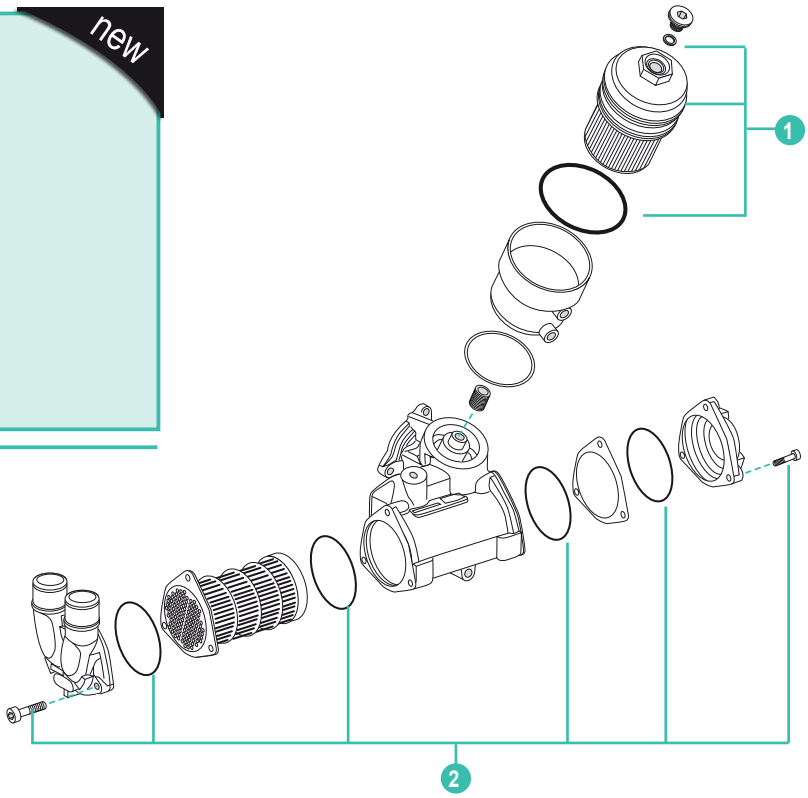

new

3	OEM	
REC32077	25-896332077	CMQSD 2.0, 2.0EI/ES

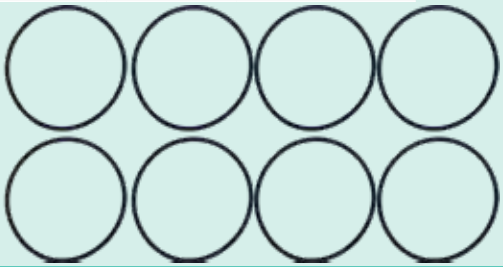

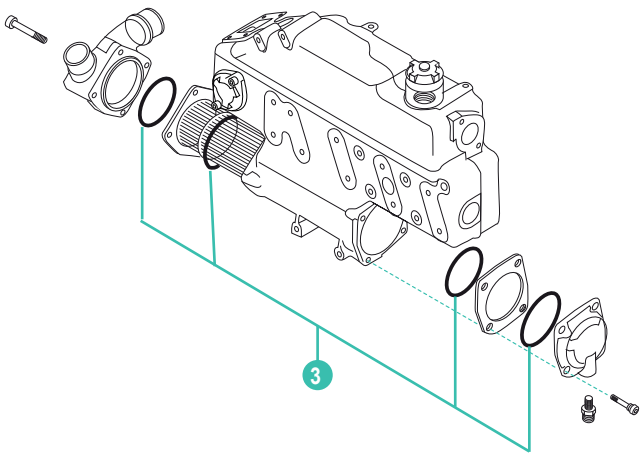

KITS BOTELLAS DE ACEITE | RESERVOIR ASSY KITS | KIT BOTTIGLIA OLIO | KIT RESERVOIR D'HUILE

REF	OEM
RM806193A48	806193A48 806193A38 806193A20 19742A1 19742A3



REF	OEM
REC22-861150T02	22-861150T02 22-861150A1 22-861150A2



REF	OEM
RM22-861163	22-861163



REF	OEM
RM53-87843	53-87843



BOMBAS DE AGUA | WATER PUMPS | POMPE ACQUA | POMPE D'EAU

BOMBAS DE AGUA | WATER PUMPS | POMPE ACQUA | POMPE D'EAU

REF	OEM	
REC46-8M0113733	884727 8M0113733	GM 4 & 6 CYL INLINE



REF	OEM	
REC46-8M0113734	8503991 8M0113734	GM 4 & 6 CYGM V6 & V8 SMALL BLOCK



REF	OEM	
REC46-8M0113735	8504541	GM V8 BIG BLOCK



REF	OEM	
REC879194401	46-879194401 8M0094406 8M6005225	V6 (2007+) (Sin bypass | without water bypass hole | senza bypass | sans bypass) MCM MPI (OW658583+) MCM Carb. (1A063240+)





REF	OEM		
RM46-807151A8	46-807151A8 46-72774A69	Mercruiser 454 Magnum 7.4 & 502 Con acople bomba gasolina. Includes fuel pump adapter. Con accoppiamento pompa benzina. Avec accouplement de la pompe à carburant. GEN V & VI (1992-99)	REC47-59362Q01



REF	OEM	
REC46-8M0113736	883925 8M0113736	GM 8.1L





REF	OEM	
REC3853796	883885	FORD V8 302,351



REF	OEM		KIT
SHEG155	806152	Mercruiser 7.3L Diesel 7.3L (BRAVO & MIE) DIESEL NAV 444 V-8 (1994-96) (OF060000+) REC47-59362Q01	SHE15979



REF	OEM		
SHEG151	805835	7.3L (BRAVO & MIE) DIESEL NAV444 V-8 (1994-96) D7.3L D-TRONIC 260LD (1999) D 7.3L D-TRONIC 300 (1999)	SHE15000K



REF	OEM		
SHEG2603X		CUMMINS Diesel	SHE26000K



new

REF	OEM			PORTS
REC8M0155633	8M0155633 897345016 8M0129714	CUMMINS 4.2QSD (270,320,350) 3.0L VM V6 IB/SD (150, 230, 270)	REC15000K SHE15000K	39.75 mm



new

REF	OEM			PORTS
REC8M0148530 SHEP1016	8M0148530 854179001 879312023 8M0148530	MERCRUISER CUMMINS MARINE CMD 2.8 EI, ES (170/200) CMD QSD 2.8 EI, ES (170/210/220/230) CMD QSD 2.0 EI,ES (115/130/150)	REC10615K SHE10615K	40.5 mm



BOMBAS DE AGUA BRONCE CON TORNILLERIA DE INOX

WATER PUMPS BRASS WITH STAINLESS STEEL FITTINGS

POMPE ACQUA IN BRONZO CON VITERIA INOX.

POMPES À EAU BRONZE AVEC VIS EN ACIER INOXYDABLE

REF	OEM				OEM
REC46-807151A9	46-807151A9	V6 & V8 con correa serpentín. with serpentine belt. con cinghia serpentina avec courroi serpentine	REC47-59362Q01	REC861579	861579 807731T



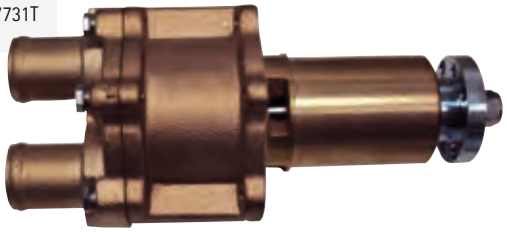

REF	OEM				OEM
REC46-862914T10	46-862914T10	4.3L MPI, 5.0L MPI, 350 MAG MPI & MX, 8.2L MAG 6.2L MPI (ECM 555)	REC47-862232A2	REC862351T	862351T





REF	OEM			kit
REC46-72774A32	46-807151A12 46-72774A32 46-59112A2 46-63450A2 46-72774A11 46-73823A7	V6 & V8 con correa V. with V belt. con cinghia V avec courroie V	REC47-59362Q01	REC47-59362A4

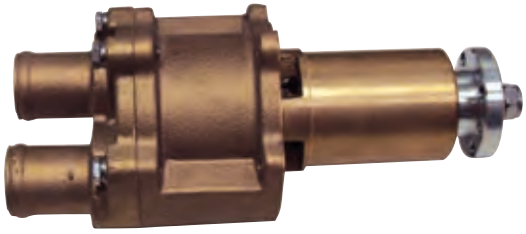

JUNTAS BOMBAS DE AGUA — WATER PUMPS GASKETS — GUARNIZIONE POMPE DELL'ACQUA — JOINTS DE POMPE D'EAU

REF	OEM		BOMBA PUMP POMPA POMPE
REC27-803192A2	24-803192A2	454-502 CHEVY	REC46-8M0113735



REF	OEM		BOMBA PUMP POMPA POMPE
REC27-34897	27-34897	GM V6 & V8 (Bloque pequeño | Small block | blocco piccolo | Bloque petit)	REC879194401 REC46-8M0113734



REF	OEM		BOMBA PUMP POMPA POMPE
REC27-56880	27-56880	Ford V8 (302, 351)	REC3853796



REF	OEM		BOMBA PUMP POMPA POMPE
REC27-49110	27-49110	V-8 (Bloque grande | big block | blocco grande | bloque grand) 454-502 CHEVY	REC46-8M0113735



REF	OEM		BOMBA PUMP POMPA POMPE
REC27-33956	27-33956	4 & 6 Cyl.	REC46-8M0113733



GUÍA DE IMPULSORES IMPELLER GUIDE GUIDA GIRANTE GUIDE TURBINES

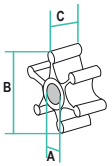

		OEM	SHERWOOD	CEF	JOHNSON	JABSCO	RECMAR	A (mm)	B (mm)	C (mm)
1	CUMMINS (SHERWOOD pump) G2601 Y G2603X. Núcleo estriado | Fluted core | Nucleo scanalato | Noyau strié.	3972366	SHE26000K	CEF500183G				20	94,5	79,8
2	DIESEL 7.3 L	47-853126 3349198 3916720	SHE15000K	CEF500167			REC15000K	16	65	51,2
3	MC-1/R/MR/ALPHA ONE	47-89984T4		CEF500313G			REC47-89984T4	22,3	60	33,8
4	ALPHA GENE II	47-43026Q02		CEF500301			REC47-43026Q02	22,4	89	32,5
5	530DTA, 636DTA, D219, D183, D281, D4.2L	47-801332602		CEF500106GT	JOH09-1028B		REC3841697	14,29	65	50,2
6	BRAVO (inyección | injection | iniezione | injection)	47-862232A2 47-8M0104229		CEF500159G			REC47-862232A2	11,4	66,5	50,6
7	HINO DIESEL	47-809866T 47-831311350		CEF500161			REC47-809866T	14,29	65	68,2
8	D254, D3.6L, D4.2L	47-816814T		CEF500177GT		JAB17018-0001	REC3593573	14,29	65,2	75,65
9	BRAVO	47-59362Q01		CEF500109			REC47-59362Q01	16,85	66,5	50,6
10	CMD QSD 2.0 & 2.8 SHERWOOD PUMP	47-879312025	SHE10615K	CEF500120T			REC10615K	15,9	65,2	41,3
11	CMD QSD 2.0 & 2.8 JABSCO PUMP	47-896332063		CEF500155		JAB11979-0001	REC11979-0001	14,29	58,65	36,65
12	CMD QSD 4.2 JABSCO PUMP	47-879194186		CEF500114T		JAB17937-0001-P	REC17937-0001	14,29	65	50,1
13	CMD QSD 4.2 SHERWOOD PUMP	8M0056956	SHE15000K	CEF500167			REC15000K	16	65	51,2



























KITS DE REPARACIÓN BOMBA DE AGUA | WATER PUMP SERVICE KITS | KIT RICAMBI POMPA ACQUA | KIT REPARATION DE POMPE À EAU

1 | R | MR | ALPHA ONE

REF	OEM	
REC46-44292Q03	46-44292Q03	MR1 Alpha one (1984-90)



REF	OEM	
REC46-48748T1	46-48748A1 2495186 2763441	MR1 Alpha one (1967-69)



REF	OEM	
REC12120	46-96148A8	MR / ALPHA I (6225577+)





REF	OEM	
REC46-64141A11	46-64141A11	MC-1 (2062141-2791956)



REF	OEM	
REC46-48748T1	46-48748T1	MC-1 (1969+)

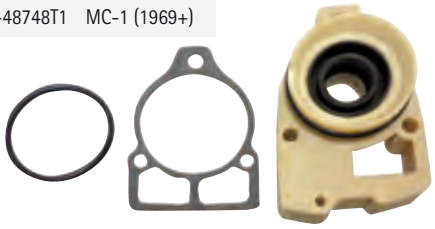

REF	OEM		NO
REC12110		MC-1 (2791957-6225576) (1970-83)	MR | ALPHA ONE



KITS COMPLETOS | FULL KITS | KIT COMPLETI | KITS COMPLETS

REF	OEM	
RECMC00002		MR & ALPHA ONE (622557+)



REF	OEM	
RECMC00001		MC-1 (2663442-6225576)



REF	OEM	
REC46-96148A8	46-60367A1 46-96148A8 46-96148A5	Parte superior. Upper water pump housing. Parte superiore. Partie supérieur MC-1 & ALPHA-ONE



OEM				
324351	TAPA BOMBA	PUMP COVER	COPERCHIO POMPA	COUVERCLE POMPE
12-191833	JUNTA	GASKET	GUARNIZIONE	JOINT
23-29804T	TUBO AGUA	WATER TUBE	TUBO ACQUA	TUYAU
25-30224Q	ARO	O-RING	ANELLO	JOINT SPI
25-30271	ARANDELA	WASHER	RONDELLA	RONDELLE
25-30613	ARO	O-RING	ANELLO	JOINT SPI
25-33145	ARO	O-RING	ANELLO	JOINT SPI
25-90011	ARO	O-RING	ANELLO	JOINT SPI
26-455771	RETÉN	SEAL	TENUTA	JOINT SPI
27-32438	JUNTA	GASKET	GUARNIZIONE	JOINT
27-426311	JUNTA	GASKET	GUARNIZIONE	JOINT
27-856081	JUNTA	GASKET	GUARNIZIONE	JOINT
27-856091	JUNTA	GASKET	GUARNIZIONE	JOINT
27-856704	JUNTA	GASKET	GUARNIZIONE	JOINT
48-96148T1	CUERPO BOMBA	PUMP HOUSING	CORPO POMPA	CORPS
47-89984T4	IMPULSOR	IMPELLER	GIRANTE	TURBINE

REF	OEM	
REC47-89984Q5	47-89984Q5	MC-1 & ALPHA-ONE

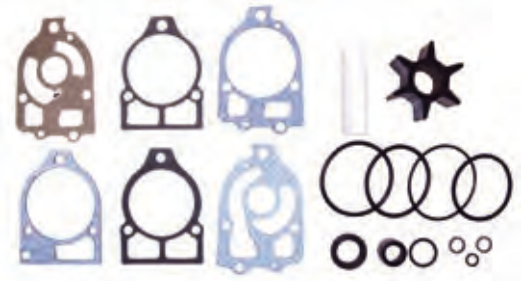

OEM				
324351	TAPA BOMBA	PUMP COVER	COPERCHIO POMPA	COUVERCLE POMPE
12-191833	JUNTA	GASKET	GUARNIZIONE	JOINT
23-29804T	TUBO AGUA	WATER TUBE	TUBO ACQUA	TUYAU
25-30224Q	ARO	O-RING	ANELLO	JOINT SPI
25-30271	ARANDELA	WASHER	RONDELLA	RONDELLE
25-30613	ARO	O-RING	ANELLO	JOINT SPI
25-33145	ARO	O-RING	ANELLO	JOINT SPI
25-90011	ARO	O-RING	ANELLO	JOINT SPI
26-455771	RETÉN	SEAL	TENUTA	JOINT SPI
27-32438	JUNTA	GASKET	GUARNIZIONE	JOINT
27-426311	JUNTA	GASKET	GUARNIZIONE	JOINT
27-856081	JUNTA	GASKET	GUARNIZIONE	JOINT
27-856091	JUNTA	GASKET	GUARNIZIONE	JOINT
27-856704	JUNTA	GASKET	GUARNIZIONE	JOINT
47-89984T4	IMPULSOR	IMPELLER	GIRANTE	TURBINE
26-38970	ACOPLE GOMA	COUPLING	ACCOPPIAMENTO	ACCOUPLEMENT
25-38099	ARO	O-RING	ANELLO	JOINT SPI
25-26722	ARO	O-RING	ANELLO	JOINT SPI

ALPHA ONE GEN II

REF	OEM
REC47-43026Q06	47-43026Q06



OEM				
47-43026Q2	IMPULSOR	IMPELLER	GIRANTE	TURBINE
8172761	PLACA	WEAR PLATE	PIASTRA	PLAQUE
27-8172771	JUNTA	GASKET	GUARNIZIONE	JOINT
27-430331	JUNTA	GASKET	GUARNIZIONE	JOINT
12-191833	JUNTA	GASKET	GUARNIZIONE	JOINT
28-8M0032833	CHAVETA	KEY	CHIAVE	CLAVETTE
26-816575A2	RETÉN	FACE SEAL	TENUTA	JOINT SPI
816597A1	ACOPLAMIENTO	COUPLIN	ACCOPPIAMENTO	ACCOUPLEMENT

REF	OEM	
RECMC00004	47-89984Q5	(1991+)



OEM				
8172761	PLACA	WEAR PLATE	PIASTRA	PLAQUE
27-430331	JUNTA	GASKET	GUARNIZIONE	JOINT
47-43026Q02	IMPULSOR	IMPELLER	GIRANTE	TURBINE
807929A1	RETÉN	PUMP SEAL CARRIER	TENUTA	JOIJNT SPI
27-8172772	JUNTA	GASKET	GUARNIZIONE	JOINT

REF	OEM	
REC817275Q05	817275Q05	D469859+



OEM				
46-96148T1	TAPA BOMBA	WATER PUMP HOUSING	COPERCHIO POMPA	COUVERCLE POMPE
27-430331	JUNTA	GASKET	GUARNIZIONE	JOINT
47-43026Q02	IMPULSOR	IMPELLER	GIRANTE	TURBINE
807929A1	RETÉN	SEAL	TENUTA	JOINT SPI
27-8172772	JUNTA	GASKET	GUARNIZIONE	JOINT
8172761	PLACA	WEAR PLATE	PIASTRA	PLAQUE

BRAVO I, II, III

REF	OEM	BOMBA PUMP POMPA POMPE
REC47-59362Q08	47-59362Q08	2 p, Plast.



REF	OEM
REC59503	59503



REF	OEM	
SHE15979	47-808145T	Diesel 7.3L



REF	OEM	BOMBA PUMP POMPA POMPE
REC47-59362T6	47-59362T6	1 p.



REF	OEM	BOMBA PUMP POMPA POMPE	
REC47-59362T5	47-59362T5	bronce brass bronzo Bronze	(-1982)



REF	OEM	BOMBA PUMP POMPA POMPE
REC46-807151A14	807151A14	1 p. Plast.



REF	OEM	
REC98-8M0121940	98-8M0121940	4.5 & 6.2L

new

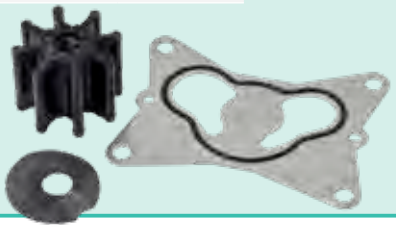

REF	OEM	BOMBA PUMP POMPA POMPE
REC47-59362A4	47-59362A4	2 p.



DESPIECE BOMBA DE AGUA — WATER PUMP ASSY — ESPLOSO POMPA ACQUA — PIÈCES DE POMPE À EAU

BOMBA CON 2 PIEZAS DE PLÁSTICO
2 PCS. PLASTIC PUMP
POMPA CON 2 PZ IN PLASTICA
POMPE À 2 PIÈCES EN PLASTIQUE

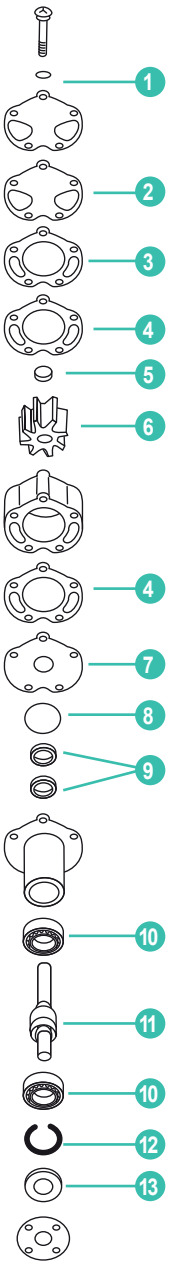

BOMBA CON 1 PIEZAS DE PLÁSTICO
1 PCS. PLASTIC PUMP
POMPA CON 1 PZ IN PLASTICA
POMPE À 1 PIÈCE EN PLASTIQUE

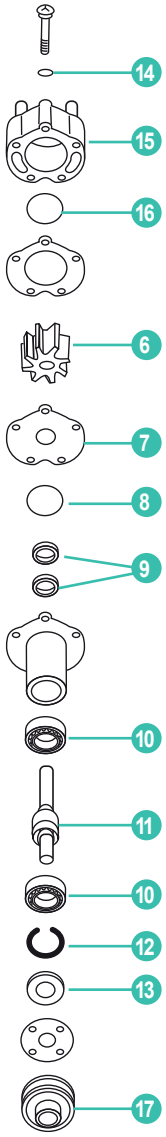

	REF	OEM					UN.
1	REC12-20084	12-20084	ARANDELA	WASHER	RONDELLA	RONDELLE	5
2	REC27-8052151	27-8052151	JUNTA	GASKET	GUARNIZIONE	JOINT	1
3	REC94916	94916	TAPA	WEAR PLATE	COPERCHIO	COUVERCLE	1
4	REC27-94914	27-94914	JUNTA	GASKET	GUARNIZIONE	JOINT	1
5	REC19-59504	19-59504	TAPÓN	PLUG	TAPPO	BOUCHON	1
6	REC47-59362Q01	47-59362Q01	IMPULSOR	IMPELLER	GIRANTE	TURBINE	1
7	REC94576	94576	TAPA	WEAR PLATE	PIASTRA	PLAQUE	1
8	REC25-94288	25-94288	ARO TÓRICO	O-RING	TENUTA	JOINT SPI	1
9	REC26-90562	26-90562	RETÉN	OIL SEAL	PARAOLIO	JOINT SPI	2
10	REC30-72961	30-72961	COJINETE	BEARING	CUSCINETTO	ROULEMENT	2
11	REC59501A1	59501A1	EJE	SHAFT	ASSE	ARBRE	1
12	REC53-23720	53-23720	ARO RETENEDOR	RETAINER RING	TENUTA	CLIPS	1
13	REC26-72785	26-72785	RETÉN ACEITE	OIL SEAL	PARAOLIO	JOINT SPI	1
14	PAGB/T97.1-8	12-36001	ARANDELA	WASHER	RONDELLA	RONDELLE	5
15	REC46-807151A14	46-807151A14	CUERPO BOMBA	PUMP HOUSING	CORPO POMPA	CORPS POMPA	1
16	REC25-33465	25-33465	ARANDELA	O-RING	RONDELLA	RONDELLE	1
17	REC861579	861579	POLEA	PULLEY	PULEGGIA	POULIE	1

POLEA BOMBA DE AGUA | WATER PUMPS PULLEY | PULIGGIA POMPE DELL'ACQUA | POULIE DE POMPE D'EAU

POLEA CIGÜEÑAL | CRANKSHAFT PULLEY | PULIGGIA ALBERO MOTORE | POULIE VILEBREQUIN

REF	OEM		Ø
MP514693	33863 33863T	2	173 mm
MP514720		2	6-3/4"



MP514693



MP514720

POLEA BOMBA AGUA | WATER PUMP PULLEY | PULIGGIA POMPE DELL'ACQUA | POULIE DE POMPE D'EAU

REF	OEM			Ø	BOMBA PUMP POMPA POMPE
REC8M0153706 MP514516	8M0153706 807729T	V6 & V8 (SERPENTIN)	2	150 mm	REC46-8M0113734 REC46-8M0113735



REC8M0153706



MP514516

POLEA PLANA SERPENTÍN | IDLER PULLEY | PULIGGIA PIANA SERPENTINA | POULIE PLANE SERPENTINE

REF	OEM	
REC896332057	896332057	CMD 2.8 DMQSD 2.8 CMQSD 4.2



POLEA GUÍA DE CORREA SERPENTÍN | GUIDE PULLEY | PULIGGIA DI GUIDA | POULIE DE GUIDE

REF	OEM		Ø
REC8M6500024	8M6500024	V6 & V8	80,96 mm



TENSOR CORREA SERPENTÍN | BELT TENSIONER | TENDICINGHIA | TENDEUR DE COURROIE

REF	OEM		Ø
REC8M0111642	8M0111642 898101425	CMQSD 2.8/4.2	
REC807757T	807757T	V6 & V8	3"



REC807757T



REC8M0111642

TENSOR CORREA V6 & V8 | V6 & V8 BELT TENSIONER | TENDICINGHIA V6 E V8 | TENDEUR DE COURROIE V6 ET V8

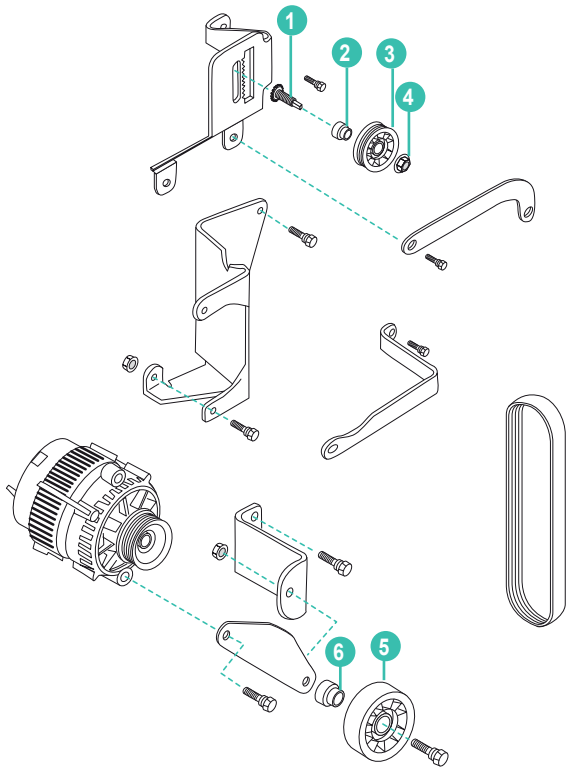

	REF	OEM				
1	REC8M0113182	8183812	PIÑON TENSOR	PINION STUD. SS	PIGNONE	PIGNON
2	REC865193	865193	CASQUILLO	BUSHING	BOCCOLA	BAGUE
3	REC864625T	864625T	POLEA	PULLEY (4.25" Ø)	PULEGGIA	POULIE
4	REC11-859135	859135	TUERCA	NUT	DADO	ÉCROU
5	REC8M6500024	865598	POLEA	PULLEY	PULEGGIA	POULIE
6	REC865193	865193	CASQUILLO	BUSHING	BOCCOLA	BAGUE

CORREAS | BELTS | CINGHIA | COURROIES

ALPHA

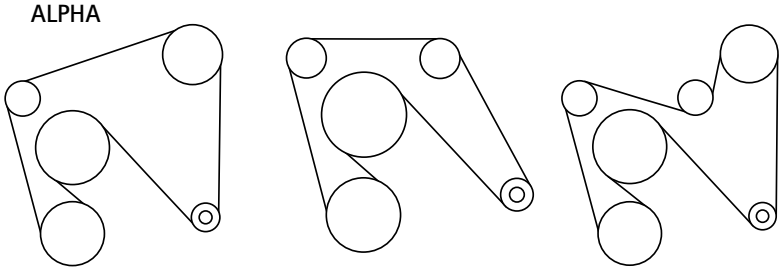

POWER STEERING | CLOSED COOLING | CLOSED COOLING & POWER STEERING

BRAVO

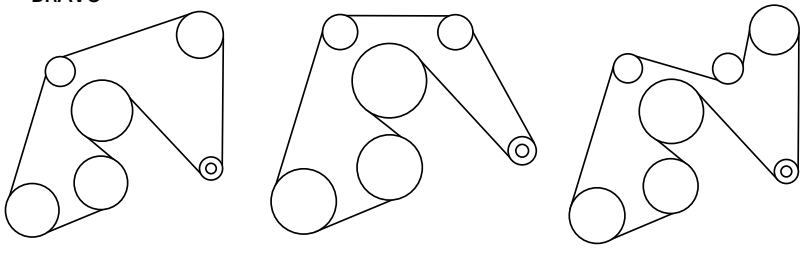

POWER STEERING | CLOSED COOLING | CLOSED COOLING & POWER STEERING

GUÍA DE CORREAS BOMBA AGUA — V-BELTS GUIDE WATER POMPE — GUIDA CINGHIA MOTORE POMPA ACQUA — GUIDE DE COURROIES POMPE A EAU

DIESEL

	SERIE	ALTERN.	DIRECCIÓN POWER STEERING IDROGUIDA DIRECTION	BOMBA AGUA SALADA SEA WATER PUMP POMPA ACQUA SALATA POMPE A EAU
CMD 1.7MS 120 I/L4	8810800	RM57-862054Q	RM57-862054Q	
CMD 1.7MI 120 L/L4	88109041	RM57-862054Q	RM57-862054Q	
CMD QSD 2.0 2.0EI, ES			REC57-879150023	
CMD QSD 2.8 & 4.2			REC57-898101580	

GUÍA DE CORREAS BOMBA AGUA — V-BELTS GUIDE WATER POMPE — GUIDA CINGHIA MOTORE POMPA ACQUA — GUIDE DE COURROIES POMPE A EAU

GAS

		SERIE	ALTERN.	DIRECCIÓN POWER STEERING IDROGUIDA DIRECTION	BOMBA AGUA SALADA SEA WATER PUMP POMPA ACQUA SALATA POMPE EAU
110	63-66	1537370 - 2044033	REC57-49043A1		
120	64-73	1666601-3770649	REC57-49043A1		
120	74-82	3770650-6229717	REC57-49043A1	REC57-65607Q (37")	
120	74-82	3770650-6229717	REC57-49043A1	REC3852106 (40")	
120(2.5L)	82-89	6229718 - C853255	REC57-49043A1		
120(2.5L)	82-89	6229718 - C853255 W/P/S	REC3852106	REC57-65607Q	
140	68-73	2508261-3770649	REC57-49043A1		
140	74-82	3770650-6229717	REC57-49043A1	REC57-65607Q (37")	
140	74-82	3770650-6229717	REC57-49043A1	REC3852106 (40")	
140/3.0L/3.0LX	1982	6229718	REC57-49043A1		
140/3.0L/3.0LX	1982	6229718+ W/PS	REC3852106	REC57-65607Q	
150	64-66	1666495-2048646	REC57-49043A1		
160	67-69	2048022-2770031	REC57-49043A1		
165	70-73	2770032 - 3774864	REC57-49043A1		
165	74-81	3774865 - 5813433	REC57-49043A1	REC57-65607Q (37")	
165	74-81	3774865 - 5813433	REC57-49043A1	REC3852106 (40")	
165/170/180/190/3.7L	85-89	6916779 - C762299		REC57-49043A1	
470 (170HP)	83-84	6218037 - 6916778		REC57-49043A1	
488	83-84	6170297 - 6916778		REC57-49043A1	
175	1987	OB527955-OB773242		REC57-816295Q	
175/185/4.3L	85-92	A331455 - D714106	REC3858462	REC57-34359	REC966903
3.0L GM 181 I/L4		0W302000+		RM57-862054Q	
3.0 MPI EC		1A072812+		RM57-862054Q	
3.0 TKS Pus		1G404114+		RM57-862054Q	
4.3L	92-96	D714107 - F802999	REC829207		REC57-13457Q
4.3L (2bbl)	88-32	OB773243-OD714106		REC57-816295Q	
4.3L (GenII) (2 bbl)	92-96	OD714107-OF802999		REC57-816295Q	
4.3LX (4bbl)	88-92	OB775130-OD714369		REC57-816295Q	
4.3LX (Gen II)	92-96	OD714370-OF802999		REC57-816295Q	
888	71-77	3108723 - 4887829	REC3858462		
888	71-77	3108723 - 4887829	REC3858462	REC57-13457Q (30")	REC3858462
898 W/O HIGH MT P/S	77-84	4762210 - 6218461	REC829207	REC966900	REC966903
898 W/ HIGH MT P/S	77-84	4762210 - 6218461	REC3858462	REC57-91035Q1	REC966903
898/200/5.0L	85-95	6218462 - F600999	REC3858462	REC57-91035Q1	REC966903
898/200/5.0L	85-95	6218462 - F600999	REC829207	REC57-34359	REC57-13457Q
200	1969	2453769 - 2712072	REC57-49043A1		
205	85-91	A331455 - D714369	REC3858462	REC57-34359	REC966903
215	70-72	2781153 - 3563181	REC3858462		
215 MIE	70-72	2781153 - 3563181	REC3858462		
225	73-74	3385721 - 4166999	REC3858462	REC57-34359	REC966903
225 MIE	73-74	3385721 - 4166999	REC3858462		
225 MCM/MIE	67-69	2278647 - 2694014	REC829207		
228 W/O HIGH MT P/S	77-82	4765100-6218461	REC829207	REC966900	REC966903
228 W/ HIGH MT P/S	77-82	4765100-6218461	REC3858462	REC57-91035Q1	REC966903
228/230/5.0L	83-95	6218462 - F600999	REC3858462	REC57-91035Q1	REC966903
228/230/5.0L	83-95	6218462 - F600999	REC829207	REC57-34359	REC57-13457Q
228 MIE	1977	4765100 - 4929030	REC829207		REC966900
228/230/5.0L MIE	78-87	4929030 - B788151	REC3858462	REC57-91035Q1	REC966903
228/230/5.0L MIE	78-87	4929030 - B788151	REC829207	REC57-34359	REC57-13457Q
233	75-77	4173000 - 4902304	REC3858462		
233	75-77	4173000 - 4902304	REC3858462	REC57-13457Q	REC966903
233 MIE	75-76	4173000 - 4775784	REC3858462		
250	68-69	2314301 - 2639854	REC829207		
250	1977	4768000 - 4908849	REC3858462	REC966903	REC966903
255 MCM/MIE	73-74	3258728 - 4175499	REC3858462		
255	75-76	4175500 - 4498700	REC829207		
255	1976	4498701-4499060	REC829207		
255	1976	4499061-4767999	REC829207		
255 MIE	75-77	4175500 - 4498700	REC829207		
255 MIE	77-78	4498701 - 4924564	REC829207		REC966903

		SERIE	ALTERN.	DIRECCIÓN POWER STEERING IDROGUIDA DIRECTION	BOMBA AGUA SALADA SEA WATER PUMP POMPA ACQUA SALATA POMPE EAU
255/260/5.7L MIE & Ski	78-86	4924565 - B522505	REC3858462		REC966903
260/5.7L MIE & Ski	87-93	B522506 - F024999	REC3858462		REC966903
260/5.7L MIE & Ski	87-93	B522506 - F024999	REC829207		REC57-13457Q
5.7L MIE & Ski	94-96	F025000 - K040306	REC829207		REC57-13457Q
260 W/HM P/S	78-82	4908850 - 6218461	REC3858462	REC57-91035Q1	REC966903
260 W/LM P/S	1978-82	4908850 - 6218461	REC829207		REC966903
260/5.7L	1983-95	6218462 - F600999	REC3858462	REC57-91035Q1	REC966903
260/5.7L	1983-95	6218462 - F600999	REC829207	REC57-34359	REC57-13457Q
5.7L/5.7LX	1996	F601000 - K001526	REC829207	REC57-816295Q	REC57-13457Q
350 MAG	1986-95	A635178 - F600999	REC3858462	REC57-34359	REC966903
350 MAG	1986-95	A635178 - F600999	REC829207		REC57-13457Q
350 MAG	1996	F601000 - K001500	REC829207		REC57-13457Q
350 MAG Ski	1991-96	D505450 - K040005	REC829207		REC57-13457Q
Black Scorpion Ski	1996	F800000 - K040000	REC829207		REC57-13457Q
270 MCM/MIE	1969-72	2851074 - 3385720	REC829207		
280	1975	4176250 - 4176468	REC829207		
280	1975-76	4176469 - 4499390	REC829207		
280	1976	4499391 - 4499780	REC829207		
280	1976	4499781 - 4770199	REC829207		
5.7L	1988-96	OB525982-OF600999		REC57-816295Q	
5.7LEFI (2bbl)	1996	OF752400-OK001505		REC57-816295Q	
5.7L Alpha EFI (TBI)	1995	OF355305-OF752389		REC57-816295Q	
5.7L Bravo EFI (TBI)	1995	OF225560-OF752399		REC57-816295Q	
5.7LX Bravo EFI (Gen+)	1996	OF800300-OK001508		REC57-816295Q	
5.7LX EFI (4bbl TBI)	1996	OF752400-OK001505		REC57-816295Q	
320(EFI)	1987-89	A543604 - C622418	REC3858462	REC57-34359	
325 MCM/MIE	1968-74	2278747 - 3780449	REC57-48122Q		
330	1977-81	4623115-6083144	REC57-78200Q1		REC966903
330	1982-87	6083144 - B816540	REC57-78200Q1	REC57-96834Q (50")	REC966903
330	1982-87	6083144 - B816540	REC57-78200Q1	REC966931 (55")	REC57-13457Q
340 (7.4L)	1981-92	5889914 - D715493	REC57-78200Q1		REC966903
340 (7.4L)	1981-92	5889914 - D715493	REC57-78200Q1		REC57-13457Q
350 MIE	1974-75	3780450-4501640	REC57-48122Q		
350 MIE	1976	4501641 - 4623109	REC57-48122Q		REC966903
350 Mag Alpha	1987-95	OB525982-OF600999		REC57-816295Q	
350Mag Alpha (4bbl)	1996	OF601000-OK001526		REC57-816295Q	
350Mag Alpha EFI (Gen+)	1996	OF800300-OK001508		REC57-816295Q	
350Mag Bravo MPI	1995	OF415189-OF601999		REC57-816295Q	
350Mag Bravo MPI (Gen+)	1996	OF602000-OK001500		REC57-816295Q	
7.4L BRAVO	1988-91	B771113 - D603117	REC57-78200Q1	REC966931	REC57-13457Q
7.4L BRAVO	1988-91	B771113 - D603117	REC57-48122Q		REC57-13457Q
7.4L/LX BRAVO	1992-97	D603118 - K999999	REC57-48122Q		REC3852106
7.4LX Bravo (TBI)	1996-97	F820000 - K999999	REC57-48122Q		REC57-13457Q
7.4LX Bravo (MPI)	1996-97	F602010 - K147349	REC57-48122Q		REC3852106
7.4LX Bravo (MPI)	1997	K147350 - K999999	REC57-48122Q		REC57-13457Q
7.4L MIE	1989-92	C391564 - D715493	REC57-78200Q1		REC57-13457Q
7.4L MIE	1989-92	C391564 - D715493	REC57-48122Q		REC57-13457Q
7.4L MIE	1992-97	C391564 - K999999	REC57-48122Q		REC3852106
454 MAG Alpha	1986-88	A631894 +	REC57-78200Q1	REC57-96834Q (50")	
454 MAG Alpha	1986-88	A631894+	REC57-78200Q1	REC966931 (55")	
454 MAG	1988-92	B721206 - D805068	REC57-78200Q1	REC966931	REC57-13457Q
454 MAG	1988-92	B721206 - D805068	REC57-48122Q		REC57-13457Q
454 MAG	1992-97	D805069 - K999999	REC57-48122Q		REC3852106
454 MAG (MPI)	1994-97	F115700 - K147349	REC57-48122Q		REC3852106
454 MAG (MPI)	1997	K147350 - K999999	REC57-48122Q		REC57-13457Q
454 MAG Ski	1995-97	F215800 - K999999	REC57-48122Q		REC3852106
370(TRS)	1978-85	4179554 - 6721527	REC57-48122Q		
370(TRS)	1985-87	6721528 - B714586	REC57-48122Q	REC57-96834Q	
390 MCM/MIE	1969-70	2781129 - 3042731	REC57-48122Q		
400 (TRS)	1980-86	4179554 - B457644	REC57-48122Q		
420/425	1987-92	A398941 - D725499	REC57-48122Q	REC57-96834Q	
420/425	1992	D725500 - D937011	REC57-48122Q		REC3852106
440 (TRS)	1983-86	4179554 - B485220	REC57-48122Q		
450	1995-96	F347100 - F347227	REC57-48122Q		REC3852106
460 (TRS)	1983-86	4179554 - 6181046	REC57-48122Q		
502 MAG	1990-97	C878221 - D824588	REC57-48122Q		REC57-13457Q
502 MAG	1990-97	C824589 - K999999	REC57-48122Q		REC3852106
502 MAG (MPI)	1994-97	D840650 - K147349	REC57-48122Q		REC3852106
502 MAG (MPI)	1997	K147350 - K999999	REC57-48122Q		REC57-13457Q
8.2L MIE	1990-93	C878221 - D857199	REC57-48122Q		REC57-13457Q
8.2L MIE	1993-97	D857200 - K999999	REC57-48122Q		REC3852106
8.2L MPI MIE	1996-97	F819620 - K147349	REC57-48122Q		REC3852106
8.2L MPI MIE	1997	K147350 - K999999	REC57-48122Q		REC57-13457Q

GUÍA DE CORREAS SERPENTIN — SERPENTINE BELTS GUIDE — GUIDA CINGHIA SERPENTINA MOTORE — GUIDE DE COURROIES SERPENTINES

GAS

REF	OEM	LARGO LENGHT LUNGHEZZA LONGUEUR	ANCHO WIDHT LARGHEZZA LARGE
REC57-865615Q03	57-865615Q03	270,4 cm	
REC57-865615Q04	57-865615Q04	194,1 cm	
REC57-865615Q06	57-865615Q06	266,7 cm	
REC57-865615Q07	57-865615Q07	246,7 cm	
REC57-865615Q08	57-865615Q08	253,5 cm	2.06 cm
REC57-807755Q04	57-807755Q04	224,0 cm	
REC57-807755Q05	57-807755Q05	193,0 cm	
REC57-861049Q	57-861049Q	264,9 cm	
REC57-861757Q	57-861757Q	247,1 cm	

REF	OEM	LARGO LENGHT LUNGHEZZA LONGUEUR	ANCHO WIDHT LARGHEZZA LARGE
REC57-861758Q	57-861758Q	219,7 cm	
REC57-861759Q	57-861759Q	235,2 cm	
REC57-865615Q01	57-865615Q01	283,0 cm	
REC57-865615Q02	57-865615Q02	228,5 cm	
REC57-865615Q05	57-865615005	223,3 cm	2.06 cm
REC57-865615Q10	57-865615010	219,5 cm	
REC57-817113	57-817113	138,9 cm	
REC57-8M0097728	57-8M0097728 57-8M0074767	171,3 cm	
REC57-8M0088876	57-8M0088876	168,7 cm	

GAS

		SERIE	REF	NOTA FOOTNOTE NOTA NOTE
4.3L Alpha	1996-99	OF803000-OL618999	REC57-807755Q05	4
4.3L Alpha	1996-99	OF803000-OL618999	REC57-861758Q	2, 6
4.3L Alpha	1996-99	OF803000-OL618999	REC57-861759Q	2, 5
4.3L Alpha	2000-04	OL619000 +	REC57-865615Q04	3, 6, 7
4.3L Alpha	2000-04	OL619000+	REC57-865615Q08	4, 5, 7
4.3L Alpha	2000-04	OL619000+	REC57-865615Q03	3
4.3L Bravo	1996-99	OF803000-OL618999	REC57-861049Q	2, 5
4.3L Bravo	1996-99	OF803000-OL618999	REC57-861757Q	2, 6
4.3L Bravo	2000-04	OL619000+	REC57-865615Q08	4, 7
4.3L Bravo	2000-04	OL619000+	REC57-865615Q03	3
4.5 & 6.2L Bravo Raw system			REC57-8M0097728	
4.5 & 6.2L Bravo Fresh system			REC57-8M0088876	
5.0L Bravo	2002-04	OM600000+	REC57-865615Q06	3, 5, 7
5.0L Alpha	1998-99	OL012052-OL618999	REC57-807755Q05	4, 6
5.0L Alpha	1998-99	OL012052-OL618999	REC57-861049Q	5
5.0L Alpha	1998-99	OL012052-OL618999	REC57-861758Q	2, 6
5.0L Alpha	2000-04	OL619000+	REC57-865615Q06	3, 6, 7
5.0L Alpha	2000-04	OM600000+	REC57-865615Q06	3, 5, 7
5.0L Alpha	2001-04	OL619000+	REC57-865615Q08	4, 5, 7
5.0L Alpha	2001-04	OL619000+	REC57-865615Q03	3
5.0L Bravo	1998-99	OL012052-OL618999	REC57-861049Q	2, 5
5.0L Bravo	1998-99	OL012052-OL618999	REC57-861757Q	2, 6
5.0L Bravo	2000-04	OL619000+	REC57-865615Q08	4, 7
5.0L Bravo	2000-04	OL619000+	REC57-865615Q03	3
350 Mag, Alpha	1997-04	OK001501-OL618999	REC57-807755Q05	4, 6
350 Mag, Alpha	1997-04	OK001501-OL618999	REC57-861049Q	2, 5
350 Mag, Alpha	1997-04	OK001501-OL618999	REC57-861758Q	2, 6
350 Mag, Alpha	2000-04	OL619000+	REC57-865615Q07	3, 6, 7
350 Mag, Alpha	2002-04	OM600000+	REC57-865615Q06	3, 5, 7
350 Mag, Alpha	2000-04	OL619000+	REC57-865615Q08	4, 5, 7
350 Mag, Alpha	2000-04	OL619000+	REC57-865615Q03	3
350 Mag, Bravo	1997-04	OK001501-OL618999	REC57-861049Q	2, 5
350 Mag, Bravo	1997-04	OK001501-OL618999	REC57-861757Q	2, 6
350 Mag, Bravo	2002-04	OM600000+	REC57-865615Q06	3, 5, 7
350 Mag, Bravo	2000-04	OL619000+	REC57-865615Q08	4, 7
350 Mag, Bravo	2000-04	OL619000+	REC57-865615Q03	3
5.7L Alpha	1997-99	OK001501-OL618999	REC57-807755Q05	4, 6
5.7L Alpha	1997-99	OK001501-OL618999	REC57-861049Q	2, 5
5.7L Alpha	1997-99	OK001501-OL618999	REC57-861758Q	2, 6
5.7L Alpha	2000-04	OL619000+	REC57-865615Q08	3, 6, 7
5.7L Alpha	2000-04	OL619000+	REC57-865615Q03	3
5.7L Alpha	2000-04	OM600000+	REC57-865615Q06	3, 5, 7
5.7L Alpha	2000-04	OL619000+	REC57-865615Q08	3, 6, 7

		SERIE	REF	NOTA FOOTNOTE NOTA NOTE
5.7L Alpha	2000-04	OL619000+	REC57-865615Q03	3
5.7L Bravo	1997-99	OK001501-OL618999	REC57-861049Q	2, 5
5.7L Bravo	1997-99	OK001501-OL618999	REC57-861757Q	2, 6
5.7L Bravo	2002-04	OM600000+	REC57-865615Q06	3, 5, 7
5.7L Bravo	2000-04	OL619000+	REC57-865615Q08	4, 7
5.7L Bravo	2000-04	OL619000+	REC57-865615Q03	3
5.7L Ski	1997-02	K040004-M316999	REC57-807755Q04	
377 Scorpion MCM	1999-04	OL416146+	REC57-861757Q	
377 Scorpion Ski	1997-98	K000656+	REC57-807755Q04	
454 Mag MPI	1998-01	OL010029-OM024999	REC57-861049Q	1
454 Mag MPI	1998-01	OL010029-OM024999	REC57-865615Q06	2
454 Mag MPI	1998-01	OL010029-OM024999	REC57-865615Q07	4
454 Mag MPI Horizon MIE	1998-01	OL002200-OL674000	REC57-865615Q07	
496 Mag & HO	2000-04	OM025000+	REC57-865615Q01	
500 EFI	1999-04	L001477+	REC57-807755Q04	
502 Mag MPI	1998-01	OL017000-OM024999	REC57-861049Q	1
502 Mag MPI	1998-01	OL017000-OM024999	REC57-865615Q07	4
502 Mag MPI	1998-01	OL017000-OM024999	REC57-865615Q06	2
525 EFI	2003-04	OM900146+	REC57-865615Q02	
525 SC	1991-96	OD456000-745215	REC57-817113	
575 SCI	2000-04	OL306696+	REC57-807755Q04	9
575 SCI	2000-04	OL306696+	REC57-817113	8
600 SC	1991-96	OD456489 - OF877462	REC57-817113	
600 SC	1998	OK000227+	REC57-817113	
7.4L MPI	1998-01	OL010003-OM024330	REC57-861049Q	1
7.4L MPI	1998-01	OL010003-OM024330	REC57-865615Q06	2
7.4L MPI	1998-01	OL010003-OM024330	REC57-865615Q07	4
7.4L MPI MIE	1998-01	OL002006-OM025999	REC57-865615Q07	
Black Scorpion Ski	1997-01	K040004-M316999	REC57-807755Q04	
MX 6.2L Black Scorpion Ski	2001	L670015-M391599	REC57-807755Q04	
MX 6.2L MPI	2002-04	OM600000+	REC57-865615Q06	3, 5
MX 6.2L MPI	2000-04	OL680003+	REC57-865615Q08	4, 7
MX 6.2L MPI Horizon	2002-04	OM600000+	REC57-865615Q06	3
MX 6.2L MPI Horizon	2001-04	OM300000+	REC57-865615Q08	4
MX 6.2L MPI Horizon MIE	2001	M300000-M310099	REC57-807755Q04	
MX 6.2L MPI MIE	1999-01	L670000-M310099	REC57-807755Q04	
8.1S MPI MIE & HO	2000-04	OM025000+	REC57-865615Q02	
8.2L MPI MIE	1998-01	OL002450-OL674200	REC57-865615Q07	

NOTA
1 Usar con polea bomba de plástico Ø 4-3/4"
2 Usar con polea bomba de metal Ø 4-3/4"
3 Para motores con dirección hidráulica
4 Para motores sin dirección hidráulica
5 Para motores con circuito de refrigeración cerrado
6 Para motores con refrigeración standard
7 Para motores con alternadores montados en alto
8 Intercambiador
9 Alternador

FOOTNOTE
1 Use w/ plastic 4-3/4" Ø p/s pump pulley
2 Use with metal 5-3/4"Ø p/s pump pulley
3 For engines with power steering
4 For engines without power steering
5 For engines with closed cooling
6 For engines with standard cooling
7 Engines with high mounted alternators
8 Blower
9 Alternator

NOTA
1 Usare con puleggia pompa in plastica Ø 4-3/4"
2 Usare con puleggia pompa in metallo Ø 4-3/4
3 Per motori con pompa idroguida
4 per motori senza pompa idroguida
5 per motori con circuito d'acqua chiuso
6 Per motori con circuito aperto
7 Per motori con alternatori montati nella parte superiore
8 Scambiatore
9 Alternatore

NOTE
1 Utilisation avec poulie de pompe en plastique Ø 4-3/4"
2 Utilisation avec poulie de pompe métallique Ø 4-3/4"
3 Pour les moteurs avec direction hydraulique
4 Pour les moteurs sans direction hydraulique
5 Pour les moteurs avec circuit de refroid. fermé
6 Pour les moteurs avec refroid. standard
7 Pour les moteurs avec alternateurs montés en tête
8 Échangeur
9 Alternateur

GUÍA DE CORREAS SERPENTIN | SERPENTINE BELTS GUIDE | GUIDA CINGHIA SERPENTINA MOTORE | GUIDE COURROIES SERPENTIN

DIESEL

	REF	OEM	
CMD / D1.7L	REC57-882531	57-882531 57-882531T	ALT
CMD QSD 2.0 115/130/150/170	REC57-879172120	57-879172120	
CMD QSD 2.8 170/210/220/230	REC57-879194425	57-879194425 57-898101624	
CMD QSD 4.2 270/320/350	REC57-898101579	57-898101579	
TDI 3.0L V6	REC57-8M0093495	57-8M0093495 8M0067268	ALT & POWER STEERING

GUÍA DE CORREAS MOTOR | V-BELTS GUIDE | GUIDA CINGHIA MOTORE | GUIDE COURROIES DE MOTEUR

REF	OEM
REC57-13457Q	57-13457Q
REC966931	57-13458Q
REC3852106	57-32850 57-69143Q
REC57-34359	57-34359 57-37619T, Q
REC57-36356	57-36356
REC3858462	57-45856 57-49213A1 57-93658Q
REC829207	57-48120Q1
REC57-48122Q	57-48122Q

REF	OEM	
REC57-49043A1	57-49043A1 57-64032Q1	
REC57-64416	57-49211 57-64416	
REC57-52692	57-52692	
REC57-65607Q	57-65607T	940 mm
REC966903	57-74271Q	
REC966900	57-77274	
REC57-78200Q1	57-78200Q1	
REC57-816295Q	57-816295Q	
REC57-91035Q1	57-91035Q1	



MANGUITOS DE MOTOR HOSES | MANICOTTO MOTORE | TUYAU MOTEUR

TOMA DE AGUA | WATER SYSTEM | PRESA ACQUA | ENTRÉE D'EAU

REF	OEM	Ø	
REC32-4172533	32-4172533 32-8M0062309	3/4"	13 7/8"
REC32-32461	32-32461 32-32461A1	5/8"	13 7/8"



REF	OEM	
REC32-43437	32-43437	Bravo Design I



REF	OEM	
REC32-52481	32-52481	GM 4 & 6 CYL Inline



REF	OEM	
REC8M0062102	32-8M0062102	Bravo Design II



CULATA --> COLECTOR ESCAPE | CYLINDER HEAD --> EXHAUST MANIFOLD | TESTATA --> COLLECTORE DI SCARICO | CULASSE --> COLLECTEUR D'ÉCHAPPEMENT

REF	OEM	
REC32-89653	32-89653	1 1/4" ID 5"



BOMBA DE AGUA | WATER PUMP | POMPA ACQUA | POMPE D'EAU

REF	OEM
RM32-805375	32-805375



REF	OEM	
REC32-33189	32-33189	1 3/4" ID 12 3/4"



REF	OEM
REC32-897181	32-897181



BOMBA DE AGUA --> ENFRIADOR DE ACEITE | MOLDED SEAWATER PUMP --> OIL COOLER | POMPA DELL' ACQUA --> SCAMBIATORE DELL'OLIO | POMPE D'EAU --> ÉCHANGEUR D'HUILE

REF	OEM
REC32-88795	32-88795



REF	OEM
REC32-860205	32-860205



REF	OEM
REC32-887952	32-887952



REF	OEM
REC32-8080441	32-808044-1



ENFRIADOR DE ACEITE --> ENFRIADOR DE ACEITE | OIL COOLER --> OIL COOLER | SCAMBIATORE DELL'OLIO --> SCAMBIATORE DELL'OLIO | REFROIDISSEUR D'HUILE--> REFROIDISSEUR D'HUILE

REF	OEM
REC32-8600891	32-8600891



TRANSOM --> ENFRIADOR DE ACEITE | TRANSOM --> OIL COOLER | TRANSOM --> SCAMBIATORE DELL'OLIO | TRANSOM --> REFROIDISSEUR D'HUILE

REF	OEM
REC32-807661	32-807661



REF	OEM
REC32-96246A4	32-96246A4



ENFRIADOR --> CUERPO DE TERMOSTATO | COOLER --> THERMOSTAT HOUSING | SCAMBIATORE --> CORPO TERMOSTATO | REFROIDISSEUR --> CORPS THERMOSTAT

REF	OEM
REC32-806856	32-806856



REF	OEM
RM32-806209-1	32-806209-1



REF	OEM
REC32-807407	32-807407



REF	OEM
REC32-16012	32-16012



REF	OEM
REC32-808033	32-808033



CUERPO TERMOSTATO --> COLECTOR ESCAPE ESTRIBOR

THERMOSTAT HOUSING --> STARBOARD EXHAUST MANIFOLD

CORPO TERMOSTATO --> COLLETTORE SCARICO DESTRO

CORPS THERMOSTAT --> COLLECTEUR ÉPUISER TRIBORD

REF	OEM
REC32-871171	32-87117 1 32-87117



REF	OEM
REC32-807697	32-807697



REF	OEM
REC32-897401	32-897301



REF	OEM
REC32-8066351	32-8066351



REF	OEM
RM32-861057	32-861057



REF	OEM
REC32-8066361	32-8066361



CUERPO TERMOSTATO --> COLECTOR ESCAPE BABOR

THERMOSTAT HOUSING --> PORT EXHAUST MANIFOLD

CORPO TERMOSTATO --> COLLETTORE SCARICO SINSITRO

CORPS THERMOSTAT --> COLLECTOR ÉPUISER BABORD

REF	OEM
REC32-160211	32-16021 1



REF	OEM
REC32-33220	32-33220 32-3322070 32-8M0062614



REF	OEM
REC32-897491	32-89749-1



REF	OEM
REC32-862139	32-862139



REF	OEM
REC32-52481	32-52481



REF	OEM
REC32-862124	32-862124



REF	OEM
RM32-860144	32-860144



REF	OEM
RM32-860331	32-860331



CUERPO TERMOSTATO --> COLECTOR DELANTERO | THERMOSTAT HOUSING --> FRONT MANIFOLD | CORPO TERMOSTATO --> COLLETTORE FRONTALE | CORPS THERMOSTAT --> COLLECTEUR FRONTAL

REF	OEM
REC32-48132	32-48132



GUÍA MANGUITOS (COLA) | HOSES FUEL GUIDE (STERN DRIVES) | GUIDA MANICOTTO (PIEDE) | GUIDE DE LA DOUILLE (EMBASES)

MOD	SERIE	TERMOS. --> BOMBA THERMOS. --> PUMP TERMOS. --> POMPA THERMOS. --> POMPE	TERMOS. --> COLECTOR. THERMOS. --> MANIFOLD TERMOS. --> COLLETORE THERMOS. --> COLLECTEUR ESTRIBOR STB DESTRO TRIBORD	BABOR PORT SINISTRO BABORD	ESCAPE EXHAUST SCARICO ÉCHAPPEMENT	ENFRIADOR ACEITE OIL COOLER SCAMBIATORE DELL'OLIO REFROIDISSEMENT D'HUILE TRANSOM TRANSOM TRANSOM TRANSOM	TERMOSTATO THERMOSTAT TERMOSTATO THERMOSTAT	BOMBA WATER PUMP POMPA POMPE
120	1666601-3377340	REC32-8M0071007			REC32-52481			
120	3377341-5192048	REC32-8M0071007			REC32-52481			
120	5192049-6229717	REC32-8M0071007			REC32-52481			
120/2,5L	6229718-0B531853	REC32-8M0071007			REC32-52481			
140	2508261-3332137	REC32-8M0071007			REC32-52481			
140	3332138-5157669	REC32-8M0071007			REC32-52481			
140	5157669-6229717	REC32-8M0071007			REC32-52481			
140/3.0L	6229718-0C856558	REC32-8M0071007			REC32-52481			
3.0L/LX	0C856559-0F603999	REC32-8M0071007			REC32-52481			
3.0LX	0G604000+	REC32-8M0071007			REC32-52481			
140	1538930-1725960	REC32-8M0071007			REC32-52481			
488 (4bbl)	6170297-6916778						REC32-33220	
190 (4bbl)	6916779						REC32-33220	
180/3.7LX (4bbl)	6916779						REC32-33220	
185 (4bbl)	6330183-6919655	REC32-33189						
165	2770032-5178958				REC32-52481			
165	5178959-5813433				REC32-52481			
185 (2bbl)	0A331455-0B527954	REC32-33189					REC32-33220	
175/4.3 (2bbl)	0B527955-0D714106	REC32-33189					REC32-33220	
4.3L (GEN II) (2bbl)	0D714107-0F00877	REC32-33189	REC32-871171	REC32-160211			REC32-806856	
4.3L (GEN II) (2bbl)	0F000878-0F601126		REC32-8066361	REC32-8066351		REC32-806856		
4.3L (GEN II) (2bbl)	0F601127-0F802999	REC32-33189	REC32-8066361	REC32-8066351		REC32-806856		REC27-68714A6
4.3LX (GEN+) (2bbl)	0F803000+	REC32-33189	REC32-807697	RM32-860144			REC32-16012	REC27-68714A6
205 (4bbl)	0A331455-0B527954	REC32-33189	REC32-871171				REC32-16012	
205/4.3LX (4bbl)	0B527955-0D714639	REC32-33189					REC32-16012	
4.3L (GEN II) (2bbl)	0D714370-0F001219	REC32-33189				REC32-807661	REC32-16012	
4.3L (GEN II) (2bbl)	0F001220-0F601126	REC32-33189	REC32-8066361	REC32-8066351	REC32-807661	REC32-16012		
4.3L (GEN II) (2bbl)	0F601127-0F802999	REC32-33189	REC32-8066361	REC32-8066351	REC32-807661	REC32-16012		
4.3LXH (GEN+) (4bbl)	0F803114+	REC32-33189	REC32-807697	RM32-860144		REC32-807661	REC32-16012	REC32-860205
200	2453769-2712072				REC32-52481			
225 (4bbl)	3385721-4166999	REC32-33189						
225-S (4bbl)	3385721-416999	REC32-33189						
200 (2bbl)	6218462-0B525981	REC32-33189	REC32-871171	REC32-160211		REC32-96246A4	REC32-806856	REC27-68714A6
200/5.0L (2bbl)	0B525982-0F600999	REC32-33189	REC32-8066361	REC32-8066351	REC32-96246A4	REC32-806856	REC32-887952	
230 (4bbl)	6218462-0B525981	REC32-33189	REC32-871171	REC32-160211		REC32-96246A4	REC32-806856	REC27-68714A6
230/5.0LX (4bbl)	0B525982-0F600999	REC32-33189	REC32-8066361	REC32-8066351	REC32-96246A4	REC32-806856	REC32-887952	
250	4768000-4908849	REC32-33189	REC32-871171					
260	6218462-0B525981	REC32-33189				REC32-96246A4	REC32-806856	REC27-68714A6
260	6218462-0B525981	REC32-33189				REC32-96246A4		
260/5.7L	0B525982-0F600999	REC32-33189	REC32-8066361	REC32-8066351	REC32-96246A4	REC32-806856	REC32-887952	
5.7 ALPHA (2bbl)	0F601000+	REC32-33189	REC32-8066361	REC32-8066351	REC32-807661	REC32-806856	REC32-887952	
5.7L ALPHA (EFI) TBI	0F355305-0F752399	REC32-33189	REC32-8066361	REC32-8066351	REC32-96246A4	REC32-806856	REC32-887952	
5.7L ALPHA (2bbl. -TBI)	0F752400+	REC32-33189	REC32-8066361	REC32-8066351	REC32-807661	REC32-806856	REC32-887952	
5.7LX ALPHA (4bbl)	0F601000+	REC32-33189	REC32-8066361	REC32-8066351		REC32-806856	REC32-887952	
5.7LX ALPHA (4bbl. -TBI)	0F752400+	REC32-33189	REC32-807697	REC32-8066351		REC32-806856	REC32-887952	
5.7L BRAVO	0B525982-0F600999							REC32-887952
5.7L BRAVO (2bbl)	0F601000+							REC32-887952
5.7L BRAVO (EFI) TBI	0F225560-0F752399		REC32-8066361	REC32-8066351		REC32-96246A4	REC32-806856	REC32-887952
5.7L BRAVO (2bbl.-TBI)	0F752400+	REC32-33189	REC32-807697	REC32-8066351				REC32-887952

MOD	SERIE	TERMOS. --> BOMBA THERMOS. --> PUMP TERMOS. --> POMPA THERMOS. --> POMPE	TERMOS. --> COLECTOR. THERMOS. --> MANIFOLD TERMOS. --> COLLETORE THERMOS. --> COLLECTEUR			ENFRIADOR ACEITE OIL COOLER SCAMBIATORE DELL'OLIO REFROIDISSEMENT D'HUILE		
			ESTRIBOR STB DESTRO TRIBORD	BABOR PORT SINISTRO BABORD	ESCAPE EXHAUST SCARICO ÉCHAPPEMENT	TRANSOM TRANSOM TRANSOM TRANSOM	TERMOSTATO THERMOSTAT TERMOSTATO THERMOSTAT	BOMBA WATER PUMP POMPA POMPE
5.7LX BRAVO (4bbl)	0F601000+		REC32-8066361	REC32-8066351				REC32-887952
5.7LX BRAVO (4bbl:-TBI)	0F752400+	REC32-33189	REC32-807697	REC32-8066351				REC32-887952
5.7LX BRAVO (TBI)(GEN +)	0F800300+	REC32-33189	REC32-8066351	REC32-8066351			REC32-806856	REC32-887952
350 Mag. ALPHA	0A635178-0B525981	REC32-33189	REC32-871171	REC32-160211		REC32-96246A4		REC32-887952
350 Mag. ALPHA	0B525982-0F600999	REC32-33189	REC32-8066361	REC32-8066351		REC32-96246A4	REC32-806856	REC32-887952
350 Mag. ALPHA (4bbl)	0F601000+	REC32-33189	REC32-8066361	REC32-8066351		REC32-807661	REC32-806856	REC32-887952
350 Mag. ALPHA (TBI) (Gen+)	0F800300+	REC32-33189	REC32-8066361	REC32-8066351		REC32-807661	REC32-806856	REC32-887952
350 Mag. BRAVO (MPI)	0F415189-0F601999	REC32-33189	REC32-8066361	REC32-8066351		REC32-807661	REC32-806856	REC32-887952
350 Mag BRAVO (MPI)(GEN+)	0F602000+	REC32-33189	REC32-8066361	REC32-8066351		REC32-807661	REC32-806856	REC32-887952
270	2851074-3385720							
300 TEMPEST	6668677-0B430367	REC32-33189				REC32-96246A4		
320 (EFI)	0A543604-0B157602	REC32-33189				REC32-96246A4		
320 (EFI)	0B157603-0C622418	REC32-33189				REC32-96246A4		
325	2278747-3780449				REC32-48132			
330	4623115-6083144				REC32-48132			
330	6083145-0B816540			REC32-897491				
7.4L BRAVO	0B771113-0D603117		REC32-52481	REC32-897491				
7.4LX BRAVO (Gen.V)	0D603118-0F800699	REC32-897181		REC32-897491				
7.4LX BRAVO (MP)	0F602010+	REC32-897181	REC32-807697	REC32-897491				
450 Mag. ALPHA	0A631894-0B785148					REC32-96246A4		
454 Mag. BRAVO	0B721206-0D805068			REC32-897491				
454 Mag. BRAVO (Gen.V)	0D805069-0F304999	REC32-897181	REC32-807697	REC32-897491				
454 Mag. BRAVO (Gen.V)	0F305000-0F801699	REC32-897181		REC32-897491				
454 EFI (Gen.V)	0F115700-0F802349	REC32-897181						
370TRS	4179554-6721527				REC32-48132			
370TRS	6721528-0B714586		REC32-807697	REC32-897491				
400TRS	4179554-0B457644				REC32-48132			
420	0A398941-0B622418	REC32-897181						
425	0A398941-0B622418	REC32-897181						
425 (Gen.V)	0A398941-0B622418	REC32-897181						
440TRS	4179554-0B485220				REC32-48132			
450 (Gen.V)	0F347100-0F615761	REC32-897181		REC32-897491				
460 TRS	4179554-6181046				REC32-48132			
465	0C84992-0F213244	REC32-897181						
465 (Gen.V)	0C84992-0F213244	REC32-897181						
500 (Gen.V)	0F213293+	REC32-897181		REC32-897491				
502 Mag. BRAVO	0C878221-0D824588	REC32-897181		REC32-897491				
502 Mag. BRAVO (Gen.V)	0D824589-0F114528	REC32-897181		REC32-897491				
502 EFI (Gen.V)	0D840650-0F802599	REC32-897181		REC32-897491				

GUÍA MANGUITOS — HOSES FUEL GUIDE — GUIDA MANICOTTO — GUIDE TUYAUX

DIESEL

MOD	SERIE	TERMOS. --> BOMBA THERMOS. --> PUMP TERMOS. --> POMPA THERMOS. --> POMPE
530D-TA(BRAVO)	0B993002-0D725151	RM32-805375
D183 Turbo AC (BRAVO)	0B993002-0D725151	RM32-805375
D3.0L (BRAVO)	0D725152+	RM32-805375
636D-TA (BRAVO)	0B993002-0D850127	RM32-805375
D219 Turbo AC (BRAVO)	0B993002-0D850127	RM32-805375
D3.6L (BRAVO)	0D850128+	RM32-805375
D4.2L (BRAVO)	0D554732+	RM32-805375
D3.0L	0D725152+	RM32-805375

GUÍA MANGUITOS (EJE - GASOLINA) | HOSES FUEL GUIDE (SHAFT - FUEL) | GUIDA MANICOTTO (ASSE - BENZINA) | GUIDE TUYAUX (ARBRE - ESSENCE)

GAS

MOD	SERIE	TERMOS. --> BOMBA THERMOS. --> PUMP TERMOS. --> POMPA THERMOS. --> POMPE	TERMOS. --> COLECTOR. THERMOS. --> MANIFOLD TERMOS. --> COLLETORE THERMOS. --> COLLECTEUR			ENFRIADOR ACEITE OIL COOLER SCAMBIATORE DELL'OLIO REFROIDISSEMENT D'HUILE		
			ESTRIBOR STB DESTRO TRIBORD	BABOR PORT SINISTRO BABORD	ESCAPE EXHAUST SCARICO ÉCHAPPEMENT	TRANSOM TRANSOM TRANSOM TRANSOM	TERMOSTATO THERMOSTAT TERMOSTATO THERMOSTAT	BOMBA WATER PUMP POMPA POMPE
198 MIE (2bbl.)	4762210-6218461	REC32-33189			REC32-48132			
228 MIE (4bbl.)	4765100-5170008	REC32-33189			REC32-48132			
228 MIE (4bbl.)	5170009-5907057	REC32-33189						
230 MIE (4bbl.)	5907058-0B522505	REC32-33189			REC32-48132		REC27-68714A6	
230/5.0L MIE (4bbl.)	0B522506-0B788151	REC32-33189			REC32-48132		REC27-68714A6	
225MIE	2278647-2694014				REC32-33189			
250 MIE	2314301-2639854	REC32-33189			REC32-33189			
255 MIE	4175500-5195908	REC32-33189			REC32-33189			
255 MIE	5195909-5907057	REC32-33189			REC32-48132			
260 MIE	5900758-0B522505	REC32-33189			REC32-48132		REC27-68714A6	
260/5.7 MIE	0B522506-0F024999	REC32-33189			REC32-48132		REC27-68714A6	
5.7L MIE	0F025000+	REC32-33189	REC32-871171		REC32-33189	REC32-806856		
5.7L (SKI) MIE	0A338533-0B514626	REC32-33189						
5.7L (COMP. SKI)	0B514627-0F775199	REC32-33189	REC32-871171					
5.7l (COMP. SKI) (2bbl.)	0F775200+	REC32-33189	REC32-8066361	REC32-8066351		REC32-806856		
350 Mag. (SKI) CARB	0D505450+	REC32-33189	REC32-871171			REC32-806856	REC32-860205	
350 Mag. (SKI) (9EFI)TBI	0F215561+	REC32-33189	REC32-8066361	REC32-8066351		REC32-806856	REC32-860205	
350 Mag. (SKI) (9EFI)MPI	0F350583+	REC32-33189	REC32-8066361	REC32-8066351			REC32-860205	
BLACK SCORPION (GEN+)	0F800000+		REC32-807697	REC32-8066351		REC32-806856	REC32-860205	REC32-8600891
270 MIE	2851074-3077735	REC32-33189						
325 MIE	2278747-3780449				REC32-48132			
330 MIE	4623115-5889913				REC32-48132			
7.4L MIE w/hurth	0C391564-0D715493	REC32-897181		REC32-897491				
7.4L MIE (lh) Gen.V	0D715494-0F820141	REC32-897181		REC32-897491				
7.4L EFI MIE (LH) Gen.V	0F563052-0F820103	REC32-897181						
390 MIE	2781129-2820559				REC32-48132			
8.2L MIE w/hurth	0C878221-0D857199	REC32-897181		REC32-897491				
8.2L MIE (Gen.V)	0D857200-0F819619	REC32-897181		REC32-897491				

PARTES DEL MOTOR
ENGINE PARTS
PARTI MOTORE
PIECES MOTEUR

JUNTAS PARA BASES GM Y FORD

Los Kits están diseñados y catalogados especificamente para aplicaciones marinas. Su calidad es superior a las juntas originales.

MARINE GASKETS TO GM & FORD ENGINES

The gaskets kits are designed and cataloged specifically for marine engine applications. Their quality is even better than the oem's.

GUARNIZIONI PER MOTORI GM E FORD

I kit di guarnizioni sono disegnati e fabbricati specificatamente per applicazioni marine. La qualità è assolutamente paragonabile a quelle originali.

JOINTS POUR MOTEURS GM ET FORD

Les kits sont spécifiquement conçus et catalogués pour les applications marines. Leur qualité est supérieure à celle des joints d'origine.

SERIE SERIAL				
1700-17099	KIT JUNTAS DE CULATA (pack individual)	CYLINDER HEAD GASKET (single-packed)	GUARNIZIONI TESTATA (quantità 1)	KIT JOINTS DE CULASSE (paquet individuel)
17100-17199	JUEGOS DE CONVERSIÓN Todas las juntas y retenes de aceite que no se encuentran en los juegos de culata. Incluye las juntas del cárter y los retenes.	CONVERSION KITS All gaskets and oil seals not found in a Head Set. This includes timing cover gaskets and seals, oil pan gaskets, and rear main bearing seals.	KIT PARTE BASSA Include tutte le guarnizioni ed i paraoli della parte bassa del motore, viene fornita anche la guarnizione della coppa dell'olio.	KITS DE CONVERSION Tous les joints d'étanchéité et joints d'huile qui ne sont pas contenus dans les kits de culasse. Comprend les joints de carter et les joints d'huile.
17200-17299	KIT DE DESCARBONIZACIÓN Todas las juntas y retenes necesarios para el trabajo de las válvulas, incluyendo la culata, la tapa de la válvula y juntas de colector de admisión y colector de escape. (Los juegos de 4 cyl no contienen las juntas del colector de admisión/ escape. Deben pedirse por separado).	HEAD SETS SERIES All gaskets and seals necessary for a valve griding job, including cylinder head gaskets, valve cover gaskets, intake & exhaust manifold gaskets (except 4 cyl intake set), and valve stem seals.	KIT PARTE ALTA (SMERIGLIO) Include tutte le guarnizioni ed i paraoli della parte alta del motore, testate, carter distribuzione, aspirazione e scarico. (Motori a 4 cyl. la guarnizione aspirazione è da ordinare separatamente).	KIT DE DÉCARBONISATION Tous les joints requis pour le travail sur les soupapes, y compris les joints de culasse, de couvercle de soupape, de collecteur d'admission et d'échappement (les kits 4 cylindres ne contiennent pas de joints de collecteur d'admission/échappement). Ils doivent être commandés séparément.
17300-17399	KIT DE COLECTOR DE ADMISIÓN Juntas de la parte de admisión del colector, retenes y juntas de la base del distribuidor.	INTAKE MANIFOLD SETS Intake manifold side gaskets, intake manifold end seals, and distributor mounting gasket.	KIT GUARNIZIONE ASPIRAZIONE Guarnizioni laterali del collettore di aspirazione, guarnizioni e guarnizioni della base del distributore.	KIT DE COLLECTEUR D'ADMISSION Joints de collecteur d'admission, joints d'étanchéité et joints de base de distributeur.
17400-17499	KIT DE COLECTOR DE ESCAPE (de colector a culata)	EXHAUST MANIFOLD (manifold-to-cylinder head gaskets)	KIT GUARNIZIONE SCARICO (dalla testata al collettore)	KIT COLLECTEUR D'ÉCHAPPEMENT (collecteur à la culasse)
17700-17749	KIT DE CONTRARROTACIÓN RETÉN TRASERO DEL CIGÜEÑAL Retenes traseros del cigüeñal diseñados para motores de rotación opuesta a la normal. (Retenes de rotación normal incluídos en el set de conversión)	REVERSE ROTATION REAR MAIN BEARING SEALS SETS Rear main bearing seals designed to seal a crankshaft which rotates in the opposite direction from normal (Standard rotation seal is included in conversion set)	PARAOLIO MOTORI CONTROROTANTI ALBERO MOTORE Nei motori rotazione STD il paraolio viene già incluso nel kit della parte bassa. (Guarnizioni a rotazione normale incluse nel set di conversione)	KIT CONTRE-ROTATION JOINTS D'HUILE DE VILEBREQUIN ARRIÈRE Joints de vilebrequin arrière conçus pour les moteurs à contre-rotation (joints à rotation normale inclus dans le kit de conversion).
17750-17799	KIT DE RETENES TAPA DEL CIGÜEÑAL DE CONTRARROTACIÓN Retenes de la tapa del cigüeñal diseñados para motores de rotación opuesta a la normal. (Retenes de rotación normal incluídos en el set de conversión).	REVERSE ROTATION TIMING COVER SEAL SETS SERIES Timing cover seals designed to seal crankshaft which rotates in the opposite direction from normal (standard rotation seal is included in Conversion set and Timing cover set)	PARAOLIO CARTER DISTRIBUZIONE CONTROTOTANTI Guarnizioni del coperchio dell'albero a gomiti progettate per motori controrotanti (le guarnizioni per la rotazione normale sono incluse nel set di conversione).	KIT DE JOINTS DE COUVERCLE DE VILEBREQUIN CONTRE-ROTATIF Joints de couvercle de vilebrequin conçus pour les moteurs à contre-rotation (joints à rotation normale inclus dans le kit de conversion).
17900-17949	KIT DE TAPA VÁLVULA Todas las juntas de las tapas de las válvulas para sellar el motor.	VALVE COVER SET SERIES All valve cover or push rod cover gaskets (and grommets if required) required to seal one engine.	KIT COPERCHIO PUNTERIE Tutte le guarnizioni del coperchio della valvola per sigillare il motore.	KIT DE COUVERCLE DE SOUPAPE Tous les joints de couvercle de soupape pour l'étanchéité du moteur.
17950-17999	KIT DE CÁRTER Todas las juntas y retenes del cárter de aceite, o la junta del cárter de aceite de goma moldeada de una pieza, necesarias para sellar un motor.	OIL PAN SETS SERIES All oil pan gaskets & seals, or one-piece molded rubber oil pan gasket, required to seal one engine.	GUARNIZIONE COPPA DELL'OLIO Tutte le guarnizioni e le tenute della coppa dell'olio, o la guarnizione in gomma stampata in un unico pezzo, necessarie per sigillare un motore.	KIT DE CARTER D'HUILE Tous les joints de carter d'huile, ou un joint de carter d'huile en caoutchouc moulé d'une seule pièce, nécessaires à l'étanchéité d'un moteur.

120 / 205L (120 HP)

	REF	CULATA	CYLINDER HEAD	TESTATA	CULASSE
	REC17000	JUNTA CULATA	CYLINDER HEAD	GUARNIZIONE TESTATA	JOINT DE CULASSE
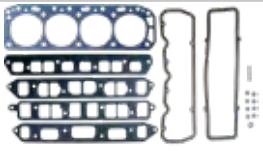	REC17200	KIT JUNTAS SUPERIOR	GASKET HEAD SET	KIT PARTE ALTA	KIT DE JOINTS SUPÉRIEURS
	REF	INFERIOR	CONVERSION	PARTE BASSA	PARTIE BASSE
	REC17100	KIT JUNTAS INFERIOR (2361802+) Retén 2 piezas, 4 piezas junta cárter.	CONVERSION GASKET SET (2361802+) 2 piece rear main bearing seal & 4 piece oil pan gasket	KIT PARTE BASSA (2361802+) Paraolio in 2 px, 4 pz guarnizione coppa dell'olio.	KIT DE JOINTS INFÉRIEURS (2361802+) Joint d'huile 2 pièces, joint de carter 4 pièces.
	REF	COLECTOR ADMISIÓN-ESCAPE	MANIFOLD INTAKE & EXHAUST	COLLETTORE ASPIRAZIONE-SCARICO	COLLECTEUR ADMISSION ET ÉCHAPPEMENT
	REC27-52546	Junta admisión-escape (1666601 - 6229717)	Intake-Exhaust gasket (1666601 - 6229717)	Guarnizione aspirazione - scarico (1666601 - 6229717)	Joint admision et échappement (1666601 - 6229717)

	REC27-96429	Junta admisión-escape (6229718+)	Intake-Exhaust gasket (6229718+)	Guarnizione aspirazione - scarico (6229718+)	Joint admision et échappement (6229718+)
	REF	CARTER	OIL PAN	COPPA DELL'OLIO	CARTER
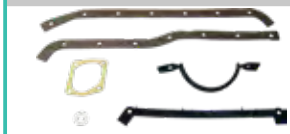	REC17950	KIT JUNTAS CARTER Retén trasero dos piezas, 4 piezas junta cárter.	GASKET OIL PAN SET Two piecerear main bearing seal & 4 piece oil pan gasket	KIT GUARNIZIONE Paraolio posteriore in 2, guarnizione coppa in 4 pz.	KIT DE JOINTS CARTER Joint arrière en deux parties, Joint de carter 4 pièces.
	REF	TAPA VÁLVULAS	VALVE COVER	COPERCHIO VALVOLE	COUVERCLE
	REC17900	Junta	Gasket	Guarnizione	Joint
	REF	TAPA EMPUJADORES	PUSH ROD COVER	COPERCHIO ASTE PUNTERIE	COUVERCLE
	REC17903	Junta	Gasket	Guarnizione	Joint

140 / 3.0L, 140 / 3.0LX (115,130, 135, 140 HP)

	REF	CULATA	CYLINDER HEAD	TESTATA	CULASSE
	REC17000	JUNTA CULATA	CYLINDER HEAD	GUARNIZIONE TESTATA	JOINT DE CULASSE
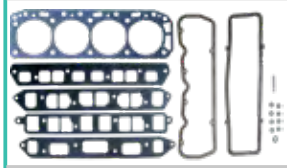	REC17200	KIT JUNTAS SUPERIOR	GASKET HEAD SET	KIT PARTE ALTA	KIT DE JOINTS SUPÉRIEURS
	REF	INFERIOR	CONVERSION	PARTE BASSA	PARTIE BASSE
	REC17102	KIT JUNTAS Retén 1 pieza. Junta cárter 1 pieza.	GASKET SET 1 piece rear main bearing seal 1 piece oil pan gasket	KIT Paraolio in 1 pz. Guarnizione coppa dell'olio in 1 pz.	KIT JOINTS INFERIEURS Joint spi 1 pièce. Joint de carter 1 pièce.
	REC17100	KIT JUNTAS INFERIOR (2361802+) Retén 2 piezas, 4 piezas junta cárter.	CONVERSION GASKET SET (2361802+) 2 piece rear main bearing seal & 4 piece oil pan gasket	KIT PARTE BASSA (2361802+) Paraolio in 2 px, 4 pz guarnizione coppa dell'olio.	KIT PARTIE INFÉRIEURE (2361802+) Joint d'huile 2 pcs, 4 pièces de joint de carter.
	REF	COLECTOR ADMISIÓN-ESCAPE	MANIFOLD INTAKE & EXHAUST	COLLECTORE ASPIRAZIONE-SCARICO	COLLECTEUR ADMISSION ET ÉCHAPPEMENT
	REC27-96429	Junta (6229718+) excepto 3.0 LX	Gasket (6229718+) excl. 3.0 LX	Guarnizione (6229718+) eccetto 3.0 LX	Joint (6229718+) sauf 3.0 LX seulement
	REC27-815528	Junta (6229718+) sólo 3.0 LX	Gasket (6229718+) only 3.0 LX	Guarnizione (6229718+) solo 3.0 LX	Joint (6229718+) 3.0 LX uniquement
	REC27-53354	Junta (-9229717)	Gasket (-9229717)	Guarnizione (9229717)	Joint (-9229717)
	REF	CARTER	OIL PAN	COPPA DELL'OLIO	CARTER
	REC17950	KIT JUNTAS Retén trasero dos piezas, 4 piezas junta cárter.	GASKET SET Two piecerear main bearing seal & 4 piece oil pan gasket	KIT GUARNIZIONE Paraolio posteriore in 2, guarnizione coppa in 4 pz.	KIT DE JOINTS Joint arrière en deux parties, Joint de carter 4 pièces.
	REF	TAPA VÁLVULAS	VALVE COVER	COPERCHIO VALVOLE	COUVERCLE SOUPAPES
	REC17900	Junta	Gasket	Guarnizione	Joint
	REF	TAPA EMPUJADORES	PUSH ROD COVER	COPERCHIO ASTE PUNTERIE	COUVERCLE
	REC17903	Junta	Gasket	Guarnizione	Joint

165, 170, 180, 190, 470, 485, 488

	REF	CULATA	CYLINDER HEAD	TESTATA	CULASSE
	FEL17069	JUNTA CULATA	CYLINDER HEAD	GUARNIZIONE TESTATA	JOINT DE CULASSE

160 HP, 165 HP (2770032 - 6916778)

	REF	CULATA	CYLINDER HEAD	TESTATA	CULASSE
	FEL17019	JUNTA CULATA	CYLINDER HEAD	GUARNIZIONE TESTATA	JOINT DE CULASSE
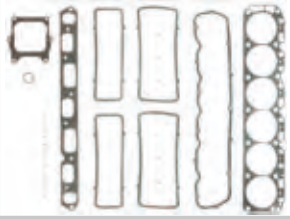	FEL17219	KIT JUNTAS SUPERIOR SIN juntas colector escape-admisión	GASKET HEAD SET WITHOUT Intake & Exhaust manifold gasket not included	KIT PARTE ALTA SENZA guarnizioni collettore scarico-aspirazione	KIT JOINTS SUPÉRIEUR SANS joints de collecteur d'échappement - admission
	REF	INFERIOR	CONVERSION	PARTE BASSA	PARTIE BASSE
	FEL17119	KIT JUNTAS INFERIOR Solo cárter 24 tornillos	CONVERSION GASKET SET 24 bolt oil pan only	KIT PARTE BASSA Solo coppa con 24 viti.	KIT JOINTS INFÉRIEUR Seulement carter avec 24 vis
	REF	COLECTOR ADMISIÓN-ESCAPE	MANIFOLD INTAKE & EXHAUST	COLLETTORE ASPIRAZIONE-SCARICO	COLLECTEUR ADMISSION ET ÉCHAPPEMENT
	FEL17302	Junta	Gasket	Guarnizione	Joint
	REF	CARTER	OIL PAN	COPPA DELL'OLIO	CARTER
	FEL17975	KIT JUNTAS Solo cárter 24 tornillos	GASKET SET 24 bolt oil pan only	KIT GUARNIZIONE Solo coppa con 24 viti.	KIT DE JOINTS Seulement carter avec 24 vis
	REF	TAPA VÁLVULAS	VALVE COVER	COPERCHIO VALVOLE	COUVERCLE SOUPAPES
	FEL17925	Junta	Gasket	Guarnizione	Joint
	REF	TAPA EMPUJADORES	PUSH ROD COVER	COPERCHIO ASTE PUNTERIE	COUVERCLE
	FEL17926	Junta	Gasket	Guarnizione	Joint

4.3L: 155, 175 HP • 4.3LX: 175, 180, 205 HP • 175 & 185 HP 2 BBL. • 205 HP 4 BBL

	REF	CULATA	CYLINDER HEAD	TESTATA	CULASSE
	REC17010	Se necesitan dos	2 required	Necessarie 2	Deux sont nécessaires
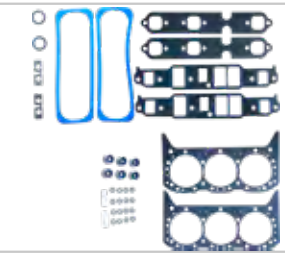	REC17210	Motor sin eje equilibrado. Incluye juntas tapa válvulas y retenes.	Engine without balance shaft. Valve cover gaskets and premium valve stem seals included.	Motore senza asse bilanciato. Include guarnizione coperchio punterie e paraoli valvole.	Moteur sans arbre d'équilibrage. Comprend les joints de cache culbuteur et les joints d'étanchéité.
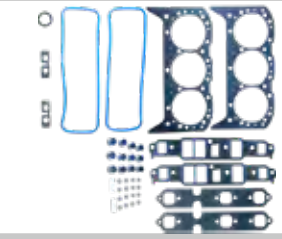	REC17211	Motor con eje equilibrado. Incluye juntas tapa válvulas y retenes.	Engine with balance shaft. Valve cover gaskets and premium valve stem seals included.	Motore con asse bilanciato. Include guarnizione coperchio punterie e paraoli valvole.	Moteur avec arbre d'équilibrage. Comprend les joints de cache culbuteur et les joints d'étanchéité.
	REF	INFERIOR	CONVERSION	PARTE BASSA	PARTIE BASSE
	REC17115	KIT JUNTAS INFERIOR Motor sin eje equilibrado con retén de una pieza y 1 pieza junta cárter. Incluye Junta de cárter.	CONVERSION GASKET SET Engine without balance shaft with one-piece rear main bearing seal & 1 piece oil pan gasket; oil pan gasket incl.	KIT PARTE BASSA Motore senza asse bilanciato. Paraolio post in 1 pz e guarnizione coppa in 1 pz. Include la guarnizione del carter.	KIT DE JOINTS INFÉRIEURS Moteur équilibré sans arbre, avec joint d'huile en une pièce et joint de carter en une pièce, y compris le joint de carter.

	REC17110	KIT JUNTAS INFERIOR Motor sin eje equilibrado con retén de 2 piezas y 4 piezas junta cárter. Incluye Junta de cárter.	CONVERSION GASKET SET Engine without balance shaft with 2 pieced rear main bearing seal & 4 pieces oil pan gasket; oil pan gasket incl.	KIT PARTE BASSA Motore senza asse bilanciato. Paraolio post in 2 pz e guarnizione coppa in 4 pz. Include la guarnizione del carter.	KIT DE JOINTS INFÉRIEURS Moteur équilibré sans arbre avec joint d'huile 2 pièces et joint de carter 4 pièces. Comprend un joint de carter.
	REC17116	KIT JUNTAS INFERIOR Motor con eje equilibrado con retén de 1 pieza y 1 pieza junta cárter. Incluye Junta de cárter.	CONVERSION GASKET SET Engine without balance shaft with one-piece rear main bearing seal & 1 piece oil pan gasket; oil pan gasket incl.	KIT PARTE BASSA Motore con asse bilanciato. Paraolio post in 1 pz e guarnizione coppa in 1 pz. Include la guarnizione del carter.	KIT DE JOINTS INFÉRIEURS Moteur avec arbre équilibré avec joint d'arbre 1 pièce et joint de carter 1 pièce. Comprend un joint de carter.
	REF	COLECTOR ADMISIÓN-ESCAPE	MANIFOLD INTAKE & EXHAUST	COLLETTORE ASPIRAZIONE-SCARICO	COLLECTEUR ADMISSION ET ÉCHAPPEMENT
	REC17310	Junta Admisión-Escape	Intake-Exhaust Gasket	Guarnizione aspirazione	Joint d'admission et d'échappement
	REC824326002	Junta Admisión Vortec (2 unid.)	Intake Gasket Vortec (2 units)	guarnizione aspirazione Vortec (2 unità)	Joint d'admission Vortec (2 pièces)
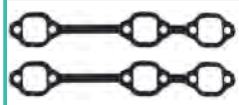	REC27-99757	Kit juntas colector - escape	Exhaust gasket set	Kit guarnizione scarico	Kit joints collecteur d'échappement
	REF	CARTER	OIL PAN	COPPA DELL'OLIO	CARTER
	REC17970	KIT JUNTAS CARTER 4 piezas junta cárter. (Retén 2 piezas)	GASKET OIL PAN SET 4 piece oil pan gasket (2 piece Seal)	KIT GUARNIZIONE Guarnizione coppa in 4 pz. (paraolio 2 pz)	KIT JOINTS 4 pièces carter.
	REC17971	1 junta carter (Retén 1 pieza)	1 piece oil pan gasket (1 piece seal)	Guarnizione coppa in 1 pz (paraolio 1 pz)	1 joint carter (Joint d'huile 1 pièce)
	REC27-142471	1 Junta Carter de goma (-2008)	1 rubber oil pan gasket (-2008)	Guarnizione 1 pz (-2008)	1 Joint de carter en caoutchouc (-2008)
	REC21124852	1 Junta Carter de goma (2008+)	1 rubber oil pan gasket (2008+)	Guarnizione 1 pz (2008+)	1 Joint de carter en caoutchouc (2008+)
	REF	TAPA VÁLVULAS	VALVE COVER	COPERCHIO VALVOLE	COUVERCLE SOUPAPES
	REC17920	Motor sin eje equilibrado.	Engine without balance shaft	Motore senza asse equilibrato.	Moteur sans arbre équilibré.
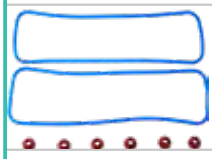	REC17921	Motor con eje equilibrado.	Engine with balance shaft	Motore con asse equilibrato.	Moteur avec arbre équilibré

5.0L: 215 HP, 225 HP , 888 (198 HP) FORD

	REF	CULATA	CYLINDER HEAD	TESTATA	CULASSE
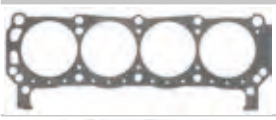	FEL17060	JUNTA CULATA Se necesitan dos	CYLINDER HEAD 2 required	GUARNIZIONE TESTATA Necessarie 2	JOINT DE CULASSE Deux sont nécessaires
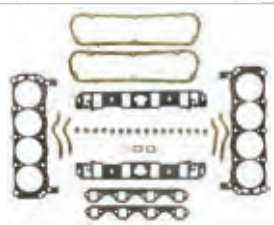	FEL17260	KIT JUNTAS SUPERIOR Incluye retenes válvulas.	GASKET HEAD SET Premium valve stem seals incl.	KIT PARTE ALTA include paraoli valvole	KIT DE JOINTS SUPÉRIEURS Comprend les joints de valve.

	REF	INFERIOR	CONVERSION	PARTE BASSA	PARTIE BASSE
	FEL17160	KIT JUNTAS	CONVERSION GASKET SET	KIT GUARNIZIONE	KIT JOINTS

	REF	COLECTOR ADMISIÓN-ESCAPE	MANIFOLD INTAKE & EXHAUST	COLLETTORE ASPIRAZIONE-SCARICO	COLLECTEUR ADMISSION ET ÉCHAPPEMENT
	FEL17360	KIT JUNTAS ADMISIÓN-ESCAPE	INTAKE-EXHAUST GASKET SET	KIT GUARNIZIONI ASPIRAZIONE - SCARICO	KIT JOINTS ADMISSION - ÉCHAPPEMENT
	REC3852455	JUNTA COLECTOR -ESCAPE	OIL PAN - EXHAUST GASKET	GUARNIZIONE COPPA OLIO - SCARICO	JOINT COLLECTEUR D'ÉCHAPPEMENT

	REF	CARTER	OIL PAN	COPPA DELL'OLIO	CARTER
	FEL17995	Retén 2 piezas	2 pieces seal	Paraolio 2 pz	Joint spi 2 pièces

	REF	TAPA VÁLVULAS	VALVE COVER	COPERCHIO VALVOLE	COUVERCLE SOUPAPES
	FEL17945	Con tapa de válvulas de acero	With iron valve cover	Con coperchio valvole in aciaio	Cache culbuteur en acier

5.0L: 180, 190, 200, 228, 230 HP
5.0LX: 205, 230 HP; 198/888 (198HP)

	REF	CULATA	CYLINDER HEAD	TESTATA	CULASSE
	REC17020	Se necesitan dos	2 required	Ne servono 2	2 sont nécessaries
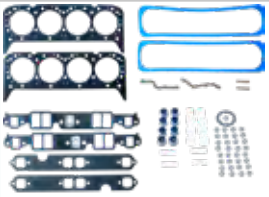	REC17224	Tornillo centro tapa válvulas. Incluye retenes válvulas.	With center bolt desing valve covers. Premium valve stem seals included.	Viti coperchio punterie al centro. Include paraoli valvole.	Cache culbuteur avec les vis centrales. Comprend les joints de queue de soupapes.
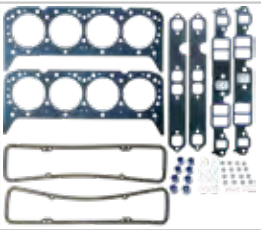	REC17220	Tornillo en el lateral tapa válvulas. Incluye retenes válvulas.	Rim bolt desing valve covers. Premium valve stem seals included.	Viti coperchio punterie nel perimetro. Include paraoli valvole.	Cache culbuteur avec les vis laterales. Comprend les joints de queue de soupapes.

	REF	INFERIOR	CONVERSION	PARTE BASSA	PARTIE BASSE
	REC17125	Retén de 1 pieza y junta cárter de 1 pieza Incluye junta de cárter.	One-piece rear main bearing seal & 1 piece oil pan gasket. Oil pan gasket included.	Paraolio in 1 peze e guarnizone coppa in 1 peze. Include paraolio coppa.	Joint spi 1 pièce. Joint de carter 1 pièce. Comprend le Joint spi.
	REC17120	Retén de 2 piezas y junta cárter de 4 piezas	Two-piece rear main bearing seal & 4 pieces oil pan gasket.	Paraolio in 2 peze e guarnizione coppa in 4 pezi.	Joint spi 2 pièces et joint de carter 4 pièces.

	REF	COLECTOR ADMISIÓN-ESCAPE	MANIFOLD INTAKE & EXHAUST	COLLETTORE ASPIRAZIONE-SCARICO	COLLECTEUR ADMISSION ET ÉCHAPPEMENT
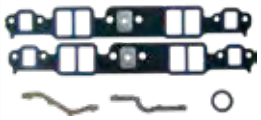	REC17320	Kit junta admisión-escape.	Intake-exhaust gasket set.	Kit guarnizioni aspirazione - scarico.	Kit joints d'admission.
	REC27-807473A1	JUNTA ADMISIÓN Vortec (2 unid.) Junta de plástico.	INTAKE GASKET Vortec (2 units). Gasket in plastic.	GUARNIZIONE ASPIRAZIONE Vortec necessita 2 pz. Guarnizione in plastica	JOINT ADMISSION Vortec (2 unités). Joint en plastique.
	REC27-33395	Kit juntas colector escape	Oil pan - exhaust gasket set.	Kit guarnizione Coppa olio - scarico.	Kit joints collecteur d'échappement.
	REF	CARTER	OIL PAN	COPPA DELL'OLIO	CARTER
	REC17982	Junta cárter 1 pieza. Junta de cárter incluida.	1 piece oil pan gasket. Molded rubber oil pan gasket included.	Guarnizione in 1 pz. Guarnizione coppa included.	Joint de carter 1 pièce.
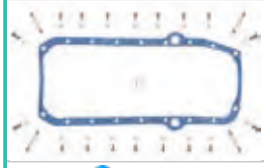	FEL17983	Junta 1 pieza. Para motores con retén trasero de 2 piezas.	1 piece molded rubber gasket for engines with Two-piece rear main bearing sea.	Guarnizione in 1 pz, paraolio posteriore in 2 px.	Joint de carter 1 pièce pour moteurs avec Joint spi arrière 2 pièces.
	REC17980	Varilla aceite de BABOR con retén trasero de 2 piezas y junta cárter de 4 piezas.	PORT dipstick with 2-piece rear main bearing seal & 4-piece oil pan gasket.	Asticella olio a SINISTRO con paraolio posteriore in 2 pz. e guarnizione coppa da 4 pz.	Jauge d'huile à BABORD avec Joint spi arrière en 2 pièces et joint de carter en 4 pièces.
	REC17981	Varilla aceite de ESTRIBOR con retén trasero de 2 piezas y junta cárter de 4 piezas.	STARBOARD dipstick with 2-piece rear main bearing seal & 4-piece oil pan gasket	Asticella olio DESTRO con paraolio posteriore in 2 pz e guarnizione coppa da 4 pz.	Jauge d'huile à TRIBORD avec Joint spi arrière en 2 pièces et joint de carter en 4 pièces.
	REF	RETÉN TRASERO CIGÜEÑAL	CRANKSHAFT REAR SEAL	PARAOLIO POSTERIORE ALBERO MOTORE	JOINT ARRIÈRE DE VILEBREQUIN
	FEL17725	Retén partido. Contrarrotación. De goma; dos piezas.	Split seal Rev. rotation, rubber; two-piece	Controrotazione in 2 pz. in gomma.	Joint contre-rotation en 2 pièces, en caoutchouc.
	REF	TAPA VÁLVULAS	VALVE COVER	COPERCHIO VALVOLE	COUVERCLE SOUPAPE
	REC17931	Tornillo centro tapa válvulas con juntas.	Molded rubber gaskets incl.	Coperchio punterie con viti centrali.	Fixation par vis centrale
	REC17930	Tornillo en el canto.	Rim bolt desing	Coperchio punterie con viti nel perimetro.	Fixation par 4 vis latérales.

BLACK SCORPION (315 HP) 5.7L: 230, 235, 260 HP • 5.7L BLUE WATER INBOARD 250, 260 HP 5.7L BRAVO, 240, 250, 270 HP • 5.7L COMP SKI, 250, 260 HP, 255 HP, 300, 300 MR/TR 350 MAGNUM, 350 MAGNUM TOURNAMENT SKI (240, 250, 265, 270 HP)

	REF	CULATA	CYLINDER HEAD	TESTATA	CULASSE
	REC17030	Se necesitan dos	2 required	Ne servono 2	2 sont nécessaires
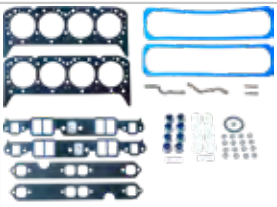	REC17214	Tornillo centro tapa válvulas. Incluye retenes válvulas.	With center bolt desing valve covers. Premium valve stem seals included.	Viti coperchio punterie al centro. Include paraoli valvole.	Cache culbuteur avec les vis centrales. Comprend les joints de queue de soupapes.
	REC17230	Tornillo en el lateral tapa válvulas. Incluye retenes válvulas.	Rim bolt desing valve covers. Premium valve stem seals included.	Viti coperchio punterie nel perimetro. Include paraoli valvole.	Cache culbuteur avec les vis laterales. Comprend les joints de queue de soupapes.

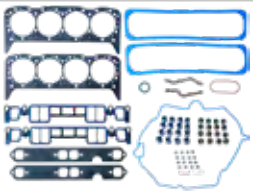	REC17232	Juntas del colector admisión de plástico. Retenes válvulas incluidos.	Gasket head set whith plastic intake manifold gaskets. Premium valve stem. Seals incl.	Kit con guarnizione aspirazione in plastica. Paraoli valvole inclusi.	Kit joint collecteur aspiraration de plastique. Comprend les joints de queue de soupapes.
	REF	INFERIOR	CONVERSION	PARTE BASSA	PARTIE BASSE
	REC17125	Retén de 1 pieza y junta cárter de 1 pieza Incluye junta de cárter.	One-piece rear main bearing seal & 1 piece oil pan gasket. Oil pan gasket included.	Paraolio in 1 peze e guarnizone coppa in 1 peze. Include paraolio coppa.	Joint spi 1 pièce. Joint de carter 1 pièce. Comprend le Joint spi.
	FEL17124	Con tapa de distribución de plástico, retén de 1 pieza y junta cárter de 1 pieza.	Engine with plastic timing cover, with 1 piece bearing seal & 1 piece oil pan gasket.	Cárter distribuzione in plastica, paraolio in 1 pz e guarnizone coppa olio in 1 pz.	Pour carter de distribution en plastique, joint arrière monobloc et joint de carter monobloc. Joint de carter inclus.
	REC17120	Retén de 2 piezas y junta cárter de 4 piezas	Two-piece rear main bearing seal & 4 pieces oil pan gasket.	Paraolio in 2 peze e guarnizione coppa in 4 pezi.	Joint spi 2 pièces et joint de carter 4 pièces.
	REF	COLECTOR ADMISIÓN-ESCAPE	MANIFOLD INTAKE & EXHAUST	COLLETTORE ASPIRAZIONE-SCARICO	COLLECTEUR ADMISSION ET ÉCHAPPEMENT
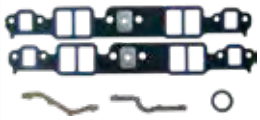	REC17320	Kit Juntas Admisión-Escape	Intake-Exhaust Gasket Set	Kit guarnizioni aspirazione - SCARICO	Kit joints d'admission
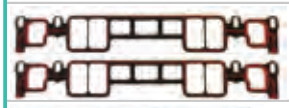	REC27-807473A1	JUNTA ADMISIÓN Vortec (2 unid.) Junta de plástico.	INTAKE GASKET Vortec (2 units) Gasket in plastic.	GUARNIZIONE Vortec necessita 2 pz guarnizione in plastica	JOINT ADMISSION Vortec (2 pièces). Joint en plastique.
	FEL17420	Kit juntas colector -escape	Oil pan - Exhaust gasket set	Kit guarnizione coppa olio - SCARICO	Kit joints collecteur-d'échappement
	REF	CARTER	OIL PAN	COPPA DELL'OLIO	CARTER
	REC17982	Junta cárter 1 pieza. Incluye Junta de cárter.	1 piece oil pan gasket. Molded rubber oil pan gasket included.	Guarnizione in 1 pz. Include guarnizione coppa.	Joint de carter 1 pièce. Comprend joint de carter.
	FEL17983	1 pieza junta para motores con retén trasero de 2 piezas.	1 piece molded rubber gasket for engines with 2-piece rear main bearing seal.	Guarnizione in 1 pz, paraolio posteriore in 2 px.	Joint 1 pièce pour moteurs avec Joint spi arrière 2 pièces.
	REC17980	Varilla aceite de BABOR con retén trasero de 2 piezas y junta cárter de 4 piezas.	PORT dipstick with 2-piece rear main bearing seal & 4-piece oil pan gasket.	Asticella olio a SINISTRO con paraolio posteriore in 2 pz. e guarnizione coppa da 4 pz.	Jauge d'huile à BABORD avec Joint spi arrière en 2 pièces et joint de carter en 4 pièces.
	REC17981	Varilla aceite de ESTRIBOR con retén trasero de 2 piezas y junta cárter de 4 piezas.	STARBOARD dipstick with 2-piece rear main bearing seal & 4-piece oil pan gasket	Asticella olio DESTRO con paraolio posteriore in 2 pz e guarnizione coppa da 4 pz.	Jauge d'huile à TRIBORD avec Joint spi arrière en 2 pièces et joint de carter en 4 pièces.
	REF	RETÉN TRASERO CIGÜEÑAL	Crankshaft rear seal	PARAOLIO POSTERIORE ALBERO MOTORE	JOINT D'HUILE DE VILEBREQUIN ARRIÈRE
	FEL17725	Retén partido. Contrarrotación. De goma; dos piezas.	Split seal Rev. rotation, rubber; two-piece	Controrotazione in 2 pz. in gomma.	Joint en caoutchouc en 2 pièces pour moteur en contre rotation.

	REF	TAPA VÁLVULAS	VALVE COVER	COPERCHIO VALVOLE	COUVERCLE DE SOUPAPE
	REC17931	Tornillo centro tapa válvulas con juntas.	Molded rubber gaskets incl.	Coperchio punterie con viti centrali.	Cache culbuteur avec vis centrales.
	REC17930	Tornillo en el canto.	Rim bolt desing	Coperchio punterie con viti nel perimetro.	Cache culbuteur avec vis latérales.
	REF	RETÉN DISTRIBUCIÓN	OIL SEAL TIMING COVER	PARAOLIO DISTRIBUZIONE	JOINT D'HUILE DE DISTRIBUTION
	REC3853341	Reten contrarotación Motor sin tapa distribución de plástico.	Reverse rotation oil seal Engines w/o plastic timing cover.	Paraolio controrotante. Motore senza carter distribuzione in plastica.	Joint de contre-rotation du moteur sans cache-soupape en plastique.

5.8L 233 (3258728 - 4175499) (233 HP)
255 (3258728 - 4175499) (255 HP)
FORD

	REF	CULATA	CYLINDER HEAD	TESTATA	CULASSE
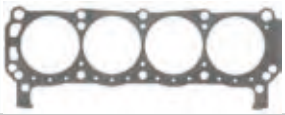	FEL17060	Se necesitan dos.	2 required.	Ne servono 2.	2 sont nécessaries.
	FEL17260	Con retenes valvula.	Premium valve stem.	Include paraolio valvole.	Comprend les joints de queue de soupapes.
	REF	INFERIOR	CONVERSION	PARTE BASSA	PARTIE BASSE
	FEL17165	Retén 2 piezas, 4 piezas junta cárter.	2 piece rear main bearing seal & 4 piece oil pan gasket,	Paraolio in 2 pz, 4 pz guarnizione coppa dell'olio.	KIT JOINTS
	REF	COLECTOR ADMISIÓN-ESCAPE	MANIFOLD INTAKE & EXHAUST	COLLETTORE ASPIRAZIONE-SCARICO	COLLECTEUR ADMISSION ET ÉCHAPPEMENT
	FEL17360	Kit Juntas Admisión.	Intake gasket set.	Kit guarnizioni aspirazione -.	Kit joints admission
	REC3852455	Junta escape.	Exhaust gasket.	Guarnizione scarico.	Joints de collecteur d'échappement.
	REF	CARTER	OIL PAN	COPPA DELL'OLIO	CARTER
	FEL17996	Cárter 4 piezas.	4 piece oil pan gasket.	4 pz coppa.	Joint de carter en 4 pièces.
	REF	TAPA VÁLVULAS	VALVE COVER	COPERCHIO VALVOLE	COUVERCLE
	FEL17945	Con tapa de válvulas de acero	With iron valve cover	Con coperchio valvole in aciaio	Cache culbuteur en acier

7.4L 454 V8: 420 HP GEN IV & V • 425 (385, 400, 425 HP GEN IV & V) • 525 SC (500 HP GEN V)
7.4L BLUE WATER INBOARD (-D715493) (310, 340 HP GEN IV)
7.4L BLUE WATER INBOARD (D715494+) (310 HP GEN V)
7.4L BRAVO (-D603117) (300, 330 HP GEN. IV)
7.4L BRAVO I (D603118+) (300, 330 HP GEN V)
7.4L BRAVO II (D603118+) (300, 330 HP GEN V)
7.4L BRAVO III (D603118+) (3350 HP GEN V)
7.4L EFI (F215800+) (310 HPGEN V), 330, 340, 350, 370TRS, • 400 TRS GEN IV, 450 HP GENE V
454 MAGNUM ALPHA (A631894 - B785148) (330 HP GEN IV)
454 MAGNUM BRAVO (B721206 - D805068) (350, 365 HP GENE IV)
454 MAGNUM BRAVO (D805069+) (350 HP GENE V)

	REF	CULATA	CYLINDER HEAD	TESTATA	CULASSE
	REC17040	Gen IV exc. H.O. Se necesitan dos	Gen IV exc. H.O. 2 required	Gen IV escluso H.O. Necessarie 2	Gen IV exc. H.O. Deux sont nécessaires.
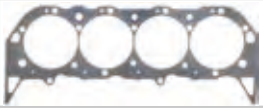	FEL17049	JUNTA CULATA Gene IV sólo H.O. super medida. Se necesitan 2.	CYLINDER HEAD Gene IV H.O. only super bore 2 required	GUARNIZIONE TESTATA Gene IV solo H.O. maggiorata. Necessarie 2	JOINT DE CULASSE Gene IV seulement H.O. super taille. 2 sont nécessaires.
	REC17046	JUNTA CULATA Gene IV sólo H.O. Se necesitan 2.	CYLINDER HEAD Gene IV H.O. only 2 required	GUARNIZIONE TESTATA Gene IV solo H.O. Necessarie 2	JOINT DE CULASSE Gene IV seulement H.O. 2 sont nécessaires.
	REC17042	Gen IV & V. Se necesitan 2.	Gen IV & V. 2 required	Gen IV e V. Necessarie 2	Gen IV et V. Deux sont nécessaires.
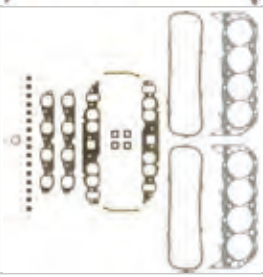	REC17240	Gen IV exc. H.O. con admisión ovalada. Se incluye retenes de válvula.	Gen IV exc. H.O. with oval intake ports. Premium valve stem seals included.	Gen IV escluso H.O. con aspirazione ovale. Inclusi paraoli valvole.	Gen IV exc. H.O. avec admission ovale. Joints de queue de soupape inclus.
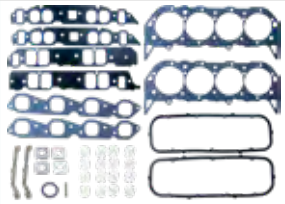	REC17241	KIT JUNTAS SUPERIOR Gene IV exc. H.O. con admisión rectangular. Se incluye retenes de válvula	GASKET HEAD SET Gen IV exc. H.O. w/ rectangular intake ports; premium valve stem seals incl.	KIT PARTE ALTA Gene IV escluso H.O. con aspirazione rettangolare. Inclusi paraoli valvole.	KIT DE JOINTS SUPÉRIEURS Gene IV exc. H.O. avec admission rectangulaire. Joints de soupape inclus
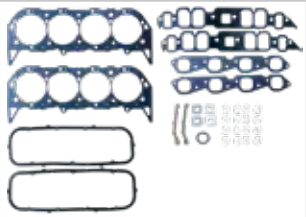	REC17246	KIT JUNTAS SUPERIOR Gene IV sólo H.O. con admisión rectangular. Se incluye retenes de válvula	GASKET HEAD SET Gen IV only H.O. w/ rectangular intake ports; premium valve stem seals incl.	KIT PARTE ALTA Gene IV solo H.O. con aspirazione rettangolare. Inclusi paraoli valvole.	KIT DE JOINTS SUPÉRIEURS Gene IV uniquement H.O. avec admission rectangulaire. Joints de soupape inclus
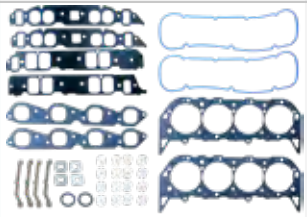	REC17242	KIT JUNTAS SUPERIOR Gene V & VI H.O. con admisión ovalada. Se incluye retenes de válvula.	GASKET HEAD SET Gen V & VI or H.O. w/oval intake ports; premium valve stem seals incl.	KIT PARTE ALTA Gene V e VI H.O. con aspirazione ovale. Include paraoli valvole.	KIT DE JOINTS SUPÉRIEURS Gene V et VI et H.O. avec admission ovale. Joints de soupape inclus.
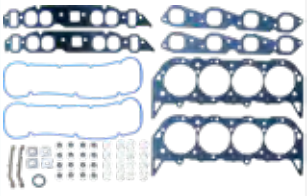	REC17243	Gen V & VI solo H.O. con admisión rectangular, juntas tapa válvulas y retenes incluídos.	Gen V & VI, H.O. only, with rectangular intake ports valve cover gaskes and premium valve stem seals incl.	Gen V e VI solo H.O. con aspirazione rettangolare, guarnizione coperchio punterie e paraoli inclusi.	Gen V et VI H.O. uniquement avec admission rectangulaire, joints de cache culbuteur et joints de queue de soupape inclus.

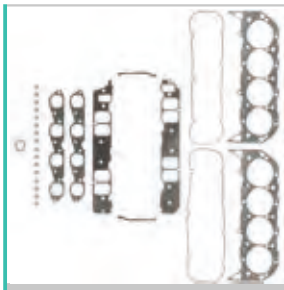	FEL17205	Gen VI sólo EFI Juntas de tapa válvulas y retenes incluídos.	Gen VI, EFI only, valve cover gaskets and premium valve stem seals incl.	Gen VI, solo EFI guarnizione rettangolare, guarnizione coperchio punterie e paraoli inclusi.	Gen V EFI uniquement. Joints de cache culbuteur et joints de queue de soupape inclus.
	REF	INFERIOR	CONVERSION	PARTE BASSA	PARTIE INFÉRIEUR
	REC17140	Gene IV con retén trasero de dos piezas y junta cárter de 4 piezas.	Gene IV w/two piece rear main bearing seal & four piece oil pan gasket.	Gene IV con paraolio posteriore in 2 pz. e guarnizione coppa dell'olio in 4 pz.	Gene IV avec joint arrière en deux parties et joint de carter en 4 parties.
	FEL17145	Gene V con retén trasero de una pieza y junta cárter de 1 pieza. Junta cárter incluída.	Gene V w/one piece rear main bearing seal & one piece oil pan gasket. oil pan gasket. incl.	Gene V con paraolio posteriore in 1 pz. e guarnizione coppa dell'olio in 1 pz.	Gene V avec joint arrière monobloc et joint de carter monobloc. Joint de carter inclus.
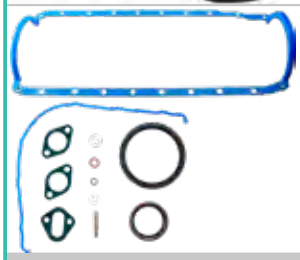	REC17146	Gene VI con retén trasero de una pieza y junta cárter de 1 pieza. Junta cárter incluída.	Gene VI w/one piece rear main bearing seal & one piece oil pan gasket. oil pan gasket. incl.	Gene VI con paraolio posteriore in 1 pz. e guarnizione coppa dell'olio in gomma in 1 pz.	Gene VI avec joint à lèvre arrière en une seule pièce et joint de carter en une seule pièce. Joint de carter inclus.
	REF	COLECTOR ADMISIÓN-ESCAPE	MANIFOLD INTAKE & EXHAUST	COLLETTORE ASPIRAZIONE-SCARICO	COLLECTEUR ADMISSION ET ÉCHAPPEMENT
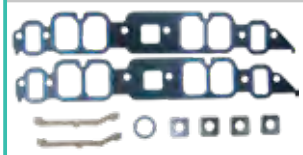	REC17341	KIT JUNTA ADMISIÓN Gene IV, V y VI sólo H.O. con admisión rectangular. Gene IV,excl. H.O. con admisión rectangular.	INTAKE GASKET SET Gene IV, V & VI, H.O. only w/rectangular intake ports Gene IV excl. H.O. w/rect. intake ports	KIT GUARNIZIONI ASPIRAZIONE Gene IV, V e VI solo H.O. con aspirazione rettangolare Gene IV escluso H.O. con aspirazione rettangolare	KIT DE JOINTS D'ADMISSION Gènes IV, V et VI uniquement H.O. avec admission rectangulaire. Gene IV, excl. H.O. avec admission rectangulaire.
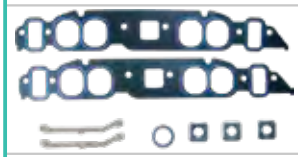	REC17340	KIT JUNTA ADMISIÓN Gene IV,excl. H.O. con admisión oval. Gene V y VI exc. EFI y H.O. con admisión ovalada.	INTAKE GASKET SET Gene IV excl. H.O. w/oval intake ports Gene V & VI, excl. EFI & H.O.w/oval intake ports	KIT GUARNIZIONI ASPIRAZIONE Gene IV escluso H.O. con aspirazione ovale. Gene V e VI escluso EFI e H.O. con aspirazione ovale	KIT DE JOINTS D'ADMISSION Gene IV, excl. H.O. avec prise ovale. Gène V et VI exc. EFI et H.O. avec admission ovale.
	REC17342	KIT JUNTA ADMISIÓN Gene V y VI sólo EFI	INTAKE GASKET SET Gene V & VI, EFI only	KIT GUARNIZIONI ASPIRAZIONE Gene V e VI, solo EFI	KIT DE JOINTS D'ADMISSION Gene V et VI EFI uniquement
	REC27-46820	KIT JUNTA ESCAPE Gene IV, V y VI.	EXHAUST GASKET SET Gene IV, V & VI	KIT GUARNIZIONI SCARICO Gene IV, V e VI	KIT DE JOINTS D'ÉCHAPPEMENT Gène IV, V et VI.
	REF	RETÉN TRASERO CIGÜEÑAL	Crankshaft rear seal	PARAOLIO POSTERIORE ALBERO MOTORE	JOINT D'HUILE DE VILEBREQUIN ARRIÈRE
	REC26-14756	Gene IV Retén Contrarrotación dos piezas	Gene IV Reverse rotation oil seal Two- pieces	Gene IV Controrotante in 2 pz.	Gene IV Joint d'huile contre-rotatif en deux parties
	REF	TAPA VÁLVULAS	VALVE COVER	COPERCHIO VALVOLE	COUVERCLE SOUPAPES
	REC17935	Gen IV	Gen IV	Gen IV	Gen IV
	REC17937	Gen V & VI	Gen V & VI	Gen V e VI	Gen V et VI

8.2L 502 V8 HP465 (465 HP GEN. V) HP 600 SC (550HP GEN. V)
8.5L (-D857199) (400 HP GEN. IV)
8.2L (D857200 - F819619) (400 HP GEN.V) 500 (470 HP GEN V)
502 MAGNUM BRAVO (-D824588) (390HP GEN IV)
502 MAGNUM BRAVO (D824589+) (390 & 415 HP GEN. V)

	REF	CULATA	CYLINDER HEAD	TESTATA	CULASSE
	FEL17049	Gen IV sólo H.O. super medida. Se necesitan 2.	Gen IV H.O. only super bore 2 required	Gen IV solo H.O. maggiorata. Necessarie 2	Gen IV seulement H.O. super taille. 2 sont nécessaries.
	REC17048	Gen IV, V & VI. Se necesitan 2.	Gen IV, V & VI. 2 required	Gen IV, V e VI. Necessita 2	Gen IV, V et VI. 2 sont nécessaries.
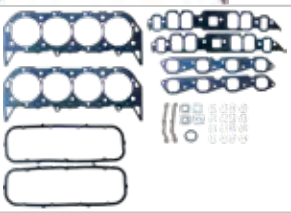	REC17248	Gen IV & Gene V exc. EFI. Se incluye retenes de válvula y juntas tapa válvulas.	Gen IV & Gen V exc. EFI Premium valve stem seals & valve cover gasktes included.	Gen IV e Gene V escluso EFI. Include paraolio e guarnizione del coperchio valvola	Gen IV et Gen V exc. EFI. Les joints de cache culbuteur et de queue de soupape sont inclus.
	REC17207	Gen V & VI solo EFI. Se incluye retenes de válvula y juntas tapa válvulas.	Gen V & VI EFI only. Premium valve stem seals & valve cover gaskets included.	Gen V e VI solo EFI. Include paraolio e guarnizione del coperchio valvola	Gen V & VI EFI uniquement. Les joints de cache culbuteur et de queue de soupape sont inclus.

	REF	INFERIOR	CONVERSION	PARTE BASSA	PARTIE BASSE
	REC17140	Gene IV con retén trasero de dos piezas y junta cárter de 4 piezas.	Gene IV w/two piece rear main bearing seal & four piece oil pan gasket.	Gene IV con paraolio posteriore in 2 pz. e guarnizione coppa dell'olio in 4 pz.	Gene IV avec joint arrière en deux parties et joint de carter en 4 parties.
	FEL17145	Gene V con retén trasero de una pieza y junta cárter de 1 pieza. Junta cárter incluída.	Gene V w/one piece rear main bearing seal & one piece oil pan gasket. oil pan gasket. incl.	Gene V con paraolio posteriore in 1 pz. e guarnizione coppa dell'olio in 1 pz.	Gene IV avec joint arrière en deux parties et joint de carter en 4 parties.
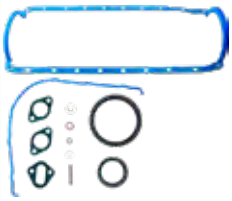	REC17146	Gene VI con retén trasero de una pieza y junta cárter de 1 pieza. Junta cárter incluída.	Gene VI w/one piece rear main bearing seal & one piece oil pan gasket. oil pan gasket. incl.	Gene VI con paraolio posteriore in 1 pz. e guarnizione coppa dell'olio in gomma in 1 pz.	Gene VI avec joint arrière monobloc et joint de carter monobloc. Joint de carter inclus.

	REF	COLECTOR ADMISIÓN-ESCAPE	MANIFOLD INTAKE & EXHAUST	COLLETTORE ASPIRAZIONE-SCARICO	COLLECTEUR ADMISSION ET ÉCHAPPEMENT
	REC17341	Gen IV, V y VI sólo H.O. con admisión rectangular. Gene IV, excl. H.O. con admisión rectangular.	Gen IV, V & VI, H.O. only with rectangular intake ports. Gen IV excl. H.O. with rect. intake ports.	Gen IV, V e VI solo H.O. con aspirazione rettangolare. Gen IV escluso H.O. con aspirazione rettangolare.	Gen IV, V et VI uniquement H.O: avec admission rectangulaire. Gen IV, exc. H.O. avec admission rectangularie.
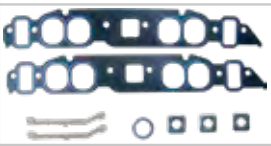	REC17340	JUNTA ADMISIÓN Gen V & VI sólo EFI.	INTAKE GASKET Gen V & VI only EFI.	GUARNIZIONE ASPIRAZIONE Gen V & VI solo EFI.	Joint d'admission Gen V et VI uniquement EFI.

	REF	RETÉN TRASERO CIGÜEÑAL	CRANKSHAFT REAR SEAL	PARAOLIO POSTERIORE ALBERO MOTORE	JOINT D'HUILE DE VILEBREQUIN ARRIÈRE
	REC26-14756	Gen IV. Retén Contrarrotación dos pieza.	Gen IV. Reverse rotation oil seal Two- pieces	Gen IV. Controrotante in 2 pz.	Gen IV. Joint spi contre-rotatif en 2 parties.

	REF	TAPA VÁLVULAS	VALVE COVER	COPERCHIO VALVOLE	COUVERCLE SOUPPES
	REC17935	Gen IV	Gen IV	Gen IV	Gen IV
	REC17937	Gen V & VI	Gen V & VI	Gen V e VI	Gen V et VI

JUNTAS DISTRIBUCIÓN | TIMING GASKETS | GUARNIZIONE DISTRIBUZIONE | JOINTS DISTRIBUTION

JUNTA TAPA DISTRIBUCION | TIMING CHAIN COVERS GASKETS | GAURNIZIONE CARTER | JOINT COUVERCLE DISTRIBUTION

REF	OEM	
REC27-49953	27-49953	4 & 6 Cyl. GM120, 140, 160/165, 2.5L, 3.0LX/L (1963+)



REF	OEM	
REC27-54529	27-54529	454 CID 427, 454, 482, 502 (-1992)



REF	OEM	
REC27-68714A6	27-68714	224 CID 165, 170, 180, 190, 470, 485 & 488

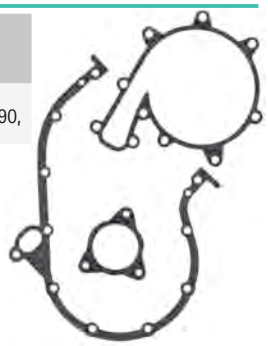

REF	OEM	
REC27-56108	27-56108	FORD V8 302, 351 (1970-77)



REF	OEM	
REC27-850456	27-85046	454, 502 / 7.4 & 8.2L GEN V & VI (1996+) Race Sterndrive 500, 520, 525, 540, 565, 575, 600, 662, 700



REF	OEM	
REC27-14250	27-14250	V6 & V8 (-1997)

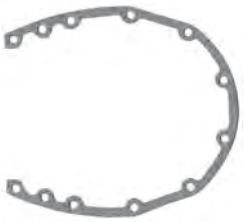

RETENES | SEALS | TENUTE | JOINTS D'HUILE

GUÍA TÓRICAS | O-RING GUIDE | GUIDA O-RING | GUIDE JOINT SPI

REF	OEM
REC25-20081	25-20081
REC25-16524	25-20415
REC25-16524	25-16524
REC308627	25-20826
REC25-80863	25-20863
REC25-21836	25-21836
REC25-25439	25-25439
REC333572	25-26543
REC302588	25-26722
REC303347	25-26802
REC3852928	25-26855
REC309731	25-29439
REC25-30224	25-30224Q
REC25-30529	25-30529

REF	OEM
REC25-30613	25-30613
REC553126	25-31305
REC3852866	25-31986
REC304174	25-32509
REC25-32546	25-32546
REC25-33145	25-33145
REC25-33465	25-33465
REC302537	25-33466
REC0307239	25-33504
REC305123	25-33756
REC25-35029	25-35029
REC310584	25-35276
REC321921	25-35480
REC301967	25-36318

REF	OEM
REC25-38099	25-38099
REC25-38101	25-38101
REC25-38933	25-38933
REC326849	25-39695
REC25-457101	25-457101
REC326649	25-45711
REC310414	25-47254
REC25-48171	25-48171
REC302035	25-48452
REC25-33465	25-54029
REC25-55801	25-55801
REC909140	25-58390
REC25-62700	25-62700
REC3852045	25-62704

REF	OEM
REC25-62705	25-62705
REC25-62706	25-62707
REC25-823683	25-823683
REC333572	25-64068
REC331188	25-65936
REC313175	25-67202
REC25-67202	25-67202
REC25-70937	25-70937
REC3852865	25-805331
REC25-89497	25-89497
REC25-90011	25-90011
REC25-97387	25-97387

GUÍA RETENES ACEITE — OIL SEALS GUIDE — GUIDA PARAOLIO — GUIDE JOINTS D'HUILE

REF	OEM	Ø EJE SHAFT Ø Ø ASSE Ø ARBRE (")	Ø EXTERIOR OUTER Ø Ø ESTERNO Ø EXTERIEUR (")
REC26-12224	26-12224	1.1875	1.6875
REC26-12709	26-12709	0.5000	0.6875
REC26-76868	26-14077	1.1875	1.6875
REC26-14240	26-14240	3.8125	4.5000
REC26-16977	26-16977	0.8750	1.2500
REC908855	26-20070	0.6250	1.0000
REC310599	26-26226	1.0000	1.5000
REC26-30913	26-30913	0.5000	1.1875
REC26-24590	26-31249	0.3750	0.5625
REC26-32511	26-32511	1.2500	2.0000
REC26-32911	26-32911	1.1250	1.2500
REC26-33467	26-33467	0.6250	1.1250
REC26-419533	26-41953	1.1875	1.8750
REC26-43035	26-43035	1.0625	1.4375
REC26-43036	26-43036	1.0312	1.4687
REC26-455771	26-45577 1	0.3125	0.4375
REC26-45587	26-45587	0.3750	0.6250
REC26-55682	25-55682	1.0000	1.2500
REC26-56397	26-56397	0.7500	1.1250
REC26-56788	26-56788	0.8750	1.2500
REC26-62818	26-62818	1.6250	2.2500
REC26-66302	26-66302	1.2500	1.8750
REC26-69188	26-69188	0.8750	1.2500
REC26-69189	26-69189	0.8750	1.3125
REC26-70081	26-70081	1.1875	1.7500
REC26-72785	26-72785	0.7500	1.8750
REC26-76868	26-76868	1.1875	1.6875
REC26-79831	26-79831	0.7500	1.1250
REC26-861694	26-805080	2.5000	3.1875
REC26-807006	26-807006	1.6875	2.2500
REC26-8164641	26-8164641	0.3750	0.7500
REC26-821092	26-821092	1.5000	2.2500
REC26-823894	26-823894	2.2500	3.0000
REC26-24590	26-892361	0.3750	0.7500
REC26-89238	26-89238	0.8750	1.5000
REC26-90562	26-90562	0.7500	1.2500
REC26-94038	26-94038	1.0000	1.5000
REC26-897153	26-96063	0.4375	0.8750
REC26-965031	26-965031	0.8750	1.3750
REC26-43993	26-43993	1640	2132
REC26-67388	26-67388	1800	3100
REC26-33467	26-33467	625	1125
REC26-16977	26-16977	875	1250
REC26-24590	26-24590	400	566
REC26-55682	26-55682	1000	1253

VÁVULA ADMISIÓN — INTAKE VALVE — VALVOLA ASPIRAZIONE — SOUPAPE ADMISSION

REF	OEM	
REC70817B	26-97664 26-976641 26-8M0050563	4.3L, 5.0L, & 5.7L old & MPI (1983-97)



RETENES VÁLVULAS — VALVE STEM SEAL — PARAOLIO VALVOLE — JOINT DE QUEUE DE SOUPAPE

REF	OEM	
REC26-34217	26-34217	4 en línea y 6 cil, GM antiguos | early | vecchio | anciennes V6/V8



REF	OEM	
REC26-75988	26-75988	330 (4623115+) 340 (5889914+) 454 Mag (A631894+)



RETÉN VÁLVULA ESCAPE — VALVE STEM SEAL — GUARNIZIONE DELLO STELO DELLA VALVOLA — JOINT DE TIGE DE SOUPAPE

new

REF	OEM	
REC26-8M0150312	26-8M0150312 26-804507	V6 & V8 small Vortec & MPI



RETÉN ADMISIÓN Y ESCAPE — INTAKE & EXHAUST VALVE — PARAOLIO ASPIRAZIONE E ESCARICO — JOINT D'HUILE ADMISSION ET ECHAPPEMENT

REF	OEM	
REC26-75624	26-75624 26-75413	165, 170, 180, 190 4 CIL. (224 cid) (6916779+) 888 (2bbl) Ford 302 V8 (1971-77) 3.7 L, LX (1980-89) 470 (1976-81) 488 (1983-84)



RETENES CIGÜEÑAL — CRANKSHAFT SEAL — PARAOLIO ALBERO MOTORE — JOINTS D'HUILE VILEBREQUIN

REF	OEM	
FELBS40013	26-814622	5.0, 5.7L (-1986)



REF	OEM	
REC26-14240	26-14240	4.3, 5.0, 5.7L Standard Rot.



REF	OEM	
REC26-14756	26-14756	7.4, 8.2L (1991+)



REF	OEM
REC3853341	36-97335
REC26-8219471	26-8219471
REC26-67388	26-67388
REC26-8219471	26-8219471



REF	OEM
REC26-14240	26-14240
REC26-811554	26-811554
REC26-90925	26-90925
RM26-879194364	
FEL17725	



REF	OEM
FEL17740	26-75980



GUÍA RETENES CIGÜEÑAL | CRANKSHAFT SEAL GUIDE | GUIDA PARAOLIO ALBERO MOTORE | GUIDE JOINTS D'HUILE DU VILEBREQUIN

MOD.	SERIE SERIAL SERIE SERIE	TRASERO REAR POSTERIORE DERRIERE	DELANTERO FRONT ANTERIORE DAVANT
120/2.5L	1666601		REC3853341
120/2.5L	2786857	FELBS40013	REC3853341
140/3.0L & LX	2508261		REC3853341
140/3.0L & LX	6229718	FELBS40013	REC3853341
150, 160, 165, 200 (I/L-6)	1666495		REC3853341
150, 160, 165, 200 (I/L-6)	2770032	FELBS40013	REC3853341
175, 185, 205, 262 4.3L (V-6)	6330183	FELBS40013	REC3853341
200, 228, 225, 230, 250, 255, 260, 270, 280, 300, 320 5.0L/5.7L/898 (V-8)	2453769	FELBS40013	REC3853341
224I/L4		REC26-90925	REC26-67388

MOD.	SERIE SERIAL SERIE SERIE	TRASERO REAR POSTERIORE DERRIERE	DELANTERO FRONT ANTERIORE DAVANT
5.0L, 5.7L, 4.3L, 3.0L (Rot. STD 1 p.)		REC26-14240	REC3853341
340 (7.4L)	4623115	FEL17740	REC26-8219471
370 TRS	5889914		REC26-8219471
400 TRS	4179554		REC26-8219471
420	A398941+		REC26-8219471
440 TRS	4179554		REC26-8219471
454 MAGNUM	A631894+		REC26-8219471
460 TRS	4179554		REC26-8219471
7.4, 8.2L, 454, 502 (Rot. STD 1 p.)		REC26-811554	REC26-8219471
7.4 BRAVO	B771113+		REC26-8219471

JUNTAS MOTOR | ENGINE GASKETS | GUARNIZIONE MOTORE | JOINTS DE MOTEUR

470, 485, 488, 165, 170, 180 & 190 HP
4 CYL EN LINEA | IN LINE | IN LINEA | EN LIGNE

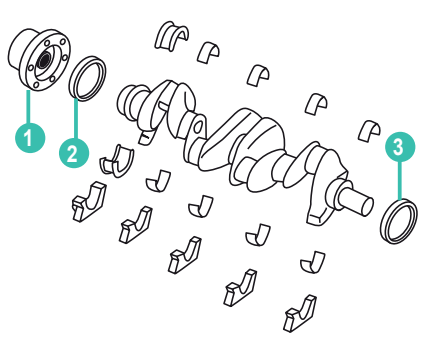

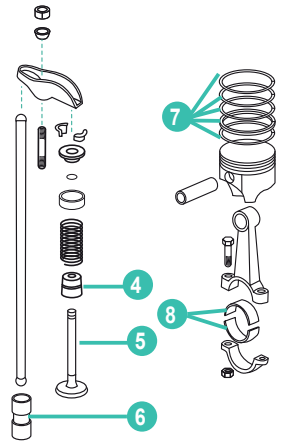

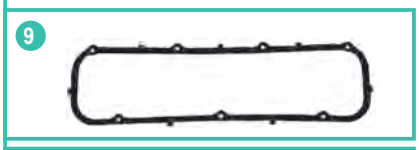



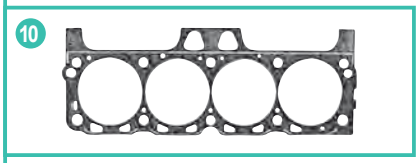

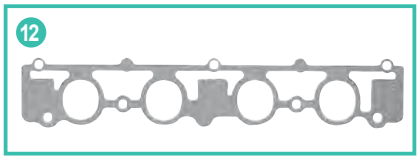

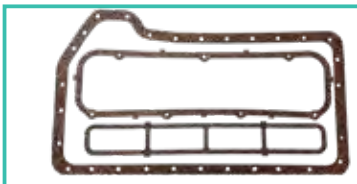

REF	OEM
REC27-72479A5	27-72479A5

	REF	OEM	MOD.					UN.
1	REC97432A2	97432A2	470 (1983-89), 165, 170, 3.7L	ACOPLAMIENTO MOTOR	ENGINE COUPLER ASSEMBLY	GIUNTO PARASTRAPPI	COUPLING	1
	REC69354A2	69354A2	470 & 485 (1976-82)					
2	REC26-90925	26-90925		RETÉN TRASERO	REAR MAIN SEAL	PARAOLIO POSTERIORE	JOINT SPI VILEBREQUIN	1
3	REC26-67388	26-67388		RETÉN DELANTERO	FRONT CRANKSHAFT SEAL	TENUTA ALBERO MOTORE	JOINT D'HUILE	1
4	REC26-75624	26-75624		RETÉN VÁLVULA	VALVE STEM SEAL	PARAOLIO VALVOLA	JOINT QUEUE DE SOUPAPE	8
5	FEDV-3929	75416	470	VÁLVULA ADMISIÓN	INTAKE VALVE	VALVOLA ASPIRAZIONE	SOUPAPE ADMISSION	4
	RM44181A1	44181A1	⊘485					
	FEDV-1984	44182A1	470	VÁLVULA ESCAPE	EXHAUST VALVE	VALVOLA SCARICO	SOUPAPE ÉCHAPPEMENT	4
	RM44182A1	44182A1	⊘485					
6	REC3853847	56153		LIFTER	TAPPET	LIFTER	POUSSOIR HYDRAULIQUE	8
7	REC39-74381A1	39-74381A1		AROS PISTON STD.	PISTON RINGS STD.	FASCE PISTONE STD.	KIT SEGMENTS STD	4
8	REC23-853853002	23-853853002		COJINETES BIELA STD.	ROD BEARING STD.	BRONZINE DI BIELLA STD.	COUSSINET DE BIELLE STD	4
	REC23-853855001	23-853855001		COJINETES BIELA 010	ROD BEARING 010	BRONZINE DI BIELLA 0.10	COUSSINET DE BIELLE 0.10	4
9	REC27-73666	27-73666	224 CID (3.7 L)	JUNTA TAPA VÁLVULAS	VALVE COVER GASKET	GUARNIZIONE COPERCHIO PUNTERIE	JOINTS COUVERCLE SOUPAPE	
10	REC27-13709	27-13709	224 CID (3.7 L) CID Model 470	JUNTA CULATA	HEAD GASKET	GUARNIZIONE TESTATA	JOINT CULASSE	
11	REC27-68715	27-68715	460 CID	JUNTA COLECTOR ESCAPE	EXHAUST MANIFOLD GASKET	GUAR. COLLETTORE SCARICO	JOINT COLLECTEUR ÉCHAP.	
12	REC27-70905	27-70905	3.7 L	JUNTS COLECTOR ADMISION	INTALKE MANIFOLD GASKET	GUAR. COLLETTORE ASPIRAZIONE	JOINT COLLECTEUR ADMI.	

SISTEMA DE ESCAPE Y ADMISIÓN
EXHAUST & INTAKE SYSTEM
SISTEMA DI SCARICO E ASPIRAZIONE
SYSTEME D'ECHAPPEMENT ET D'ADMISSION

120HP GM 153
4CYL

COLECTOR ESCAPE | EXHAUST MANIFOLD | COLLETTORE SCARICO | COLLECTEUR D'ECHAPPEMENT

REF	OEM
BAMC-1-63122	63122A14 63122A10 63122A13



JUNTA COLECTOR | MANIFOLD GASKET | GUARNIZIONE COLLETTORE | JOINT COLLECTEUR

REF	OEM
REC27-52546	27-52546
REC27-35898T	27-35898T



REC27-52546

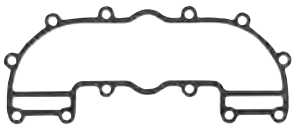

REC27-35898T

TAPA COLECTOR | END CAP | COPERCHIO COLLETTORE | COUVERCLE COLLECTEUR

REF	OEM
BA1-47638	47638A1
HGE4870	73813A1

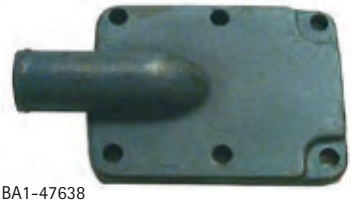

BA1-47638



HGE4870

JUNTA TAPA COLECTOR | END CAP GASKET | GUARNIZIONE COPERCHIO COLLETTORE | JOINT COUVERCLE COLLECTEUR

REF	OEM
REC27-39917	27-39917
BAMC47-27-39923	27-39923

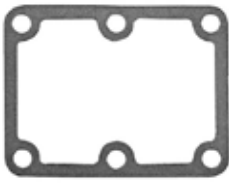

REC27-39917

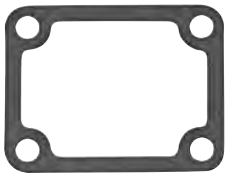

BAMC47-27-39923

CODO ESCAPE | ELBOW MANIFOLD | GOMITO DI SCARICO | COUDE D'ÉCHAPPEMENT

REF	OEM
BAMC-20-55538	55538A2



JUNTA CODO ESCAPE | ELBOW MANIFOLD GASKET | GUARNIZIONE GOMITO DI SCARICO | JOINT COUDE D'ECHAPPEMENT

REF	OEM
REC27-39915	27-39915

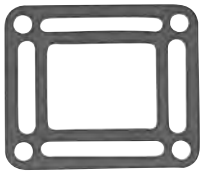

140HP GM181
4 CYL (1968-82)

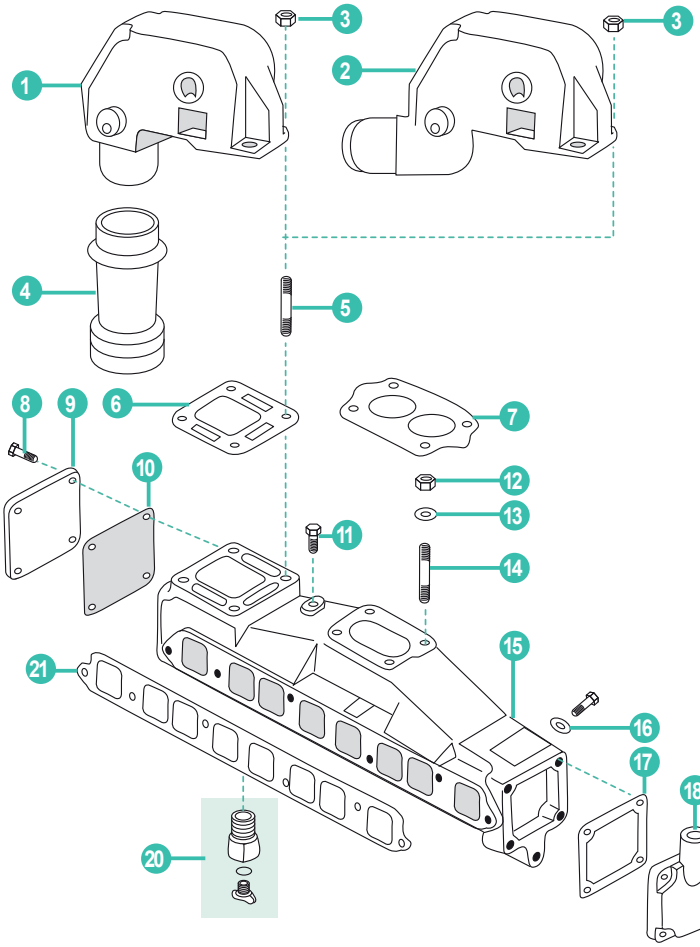



REF	OEM
REC18-8549	



REF	OEM
HOT26371-MK	

	REF	OEM					UN.
1	HOT20971	76351A04	CODO ESCAPE 3"	EXHAUST ELBOW ASSY 3"	GOMITO DI SCARICO	COUDE D'ÉCHAPPEMENT 3"	1
2	HOT20978 REC76771A2	76771A2	CODO ESCAPE 3"	EXHAUST ELBOW ASSY 3"	GOMITO DI SCARICO 3"	COUDE D'ÉCHAPPEMENT 3"	1
3	REC46335	46335	TUERCA	FLANGE SERRATED NUT	DADO	ÉCROU	4
4	REC53114A1 CEF500524	53114A1	FUELLE ESCAPE	EXHAUST ELBOW BELOW	MANICOTTO SCARICO COLLETTORE	SOUFFLET D'ECHAPPEMENT	6
5	REC16-49545	16-49545	ESPARRAGO CODO	STUD	PRIGIONIERO	GOUJON DE COLLECTEUR	4
6	REC27-99777Q02	27-99777Q02	JUNTA CODO	GASKET EXHAUST MANIFOLD TO ELBOW	GUARNIZIONE INTERMEDIA	JOINT COUDE	1
7	REC27-64692	27-64692	JUNTA BASE CARB.	GASKET CARBURETOR BASE	GUARNIZIONE BASE CARB.	JOINT BASSE DU CARBURATEUR	1
8	RM10-25299	10-824941	TORNILLO TAPA	SCREW END CAP	VITE COPERCHIO	VIS COUVERCLE	4
9	HGE4870	73813A1	TAPA COLECTOR	END CAP EXHAUST MANIFOLD	COPERCHIO	COUVERCLE	1
10	REC27-807218	27-807218	JUNTA TAPA	GASKET END CAP	GUARNIZIONE COPERCHIO	JOINT COUVERCLE	1
11	REC22-36382	22-36382	TAPON	PLUG	TAPPO	BOUCHON	1
12	REC11-862902	11-862902	TUERCA	LOCKNUT CARBURETOR	DADO	ÉCROU	4
13	REC12-20084	12-20084	ARANDELA	WASHER CARBURETOR	RONDELLA	RONDELLE	4
14	REC16-70236	16-70236	ESPARRAGO CARBURADOR	STUD CARBURETOR	PRIGIONIERO CARBURATORE	GOUJON CARBURATEUR	4
15	REC96705A1	96705A1	COLECTOR ESCAPE	EXHAUST MANIFOLD ASSEMBLY	COLLETTORE	COLLECTEUR	1
16	REC13-35048	21-20553	ARANDELLA	WASHER	RONDELLA	RONDELLE	6
17	REC27-480431	27-480431	JUNTA TAPA	GASKET END CAP	GUARNIZIONE COPERCHIO	JOINT COUVERCLE	1
18	REC60252A2	60252A2	TAPA COLECTOR	END CAP EXHAUST MANIFOLD	COPERCHIO COLLETTORE	COUVERCLE COLLECTEUR	1
19	REC10-35386	10-35386	TORNILLO TAPA	SCREW END CAP	VITE COPERCHIO	VIS COUVERCLE	4
20	REC13980	22-806608A1	TORNILLO DRENAJE	STRAIGHT FITTING	VITE DI DRENAGGIO	VIS DE VIDANGE	1
21	REC27-53354	27-53354	JUNTA COLECTOR	GASKET-EXHAUST MANIFOLD	GUARNIZIONE COLLETTORE	JOINT COLLECTEUR	1

2.5L GM 153 4 CYL
3.0L 4 CYL (1983-89)

MODELO ANTIGUO
OLD STYLE OPTION
MODELLO VECCHIO
MODEL ANCIEN

MODELO MODERNO
NEW STYLE OPTION
MODELLO MODERNO
MODEL MODERN

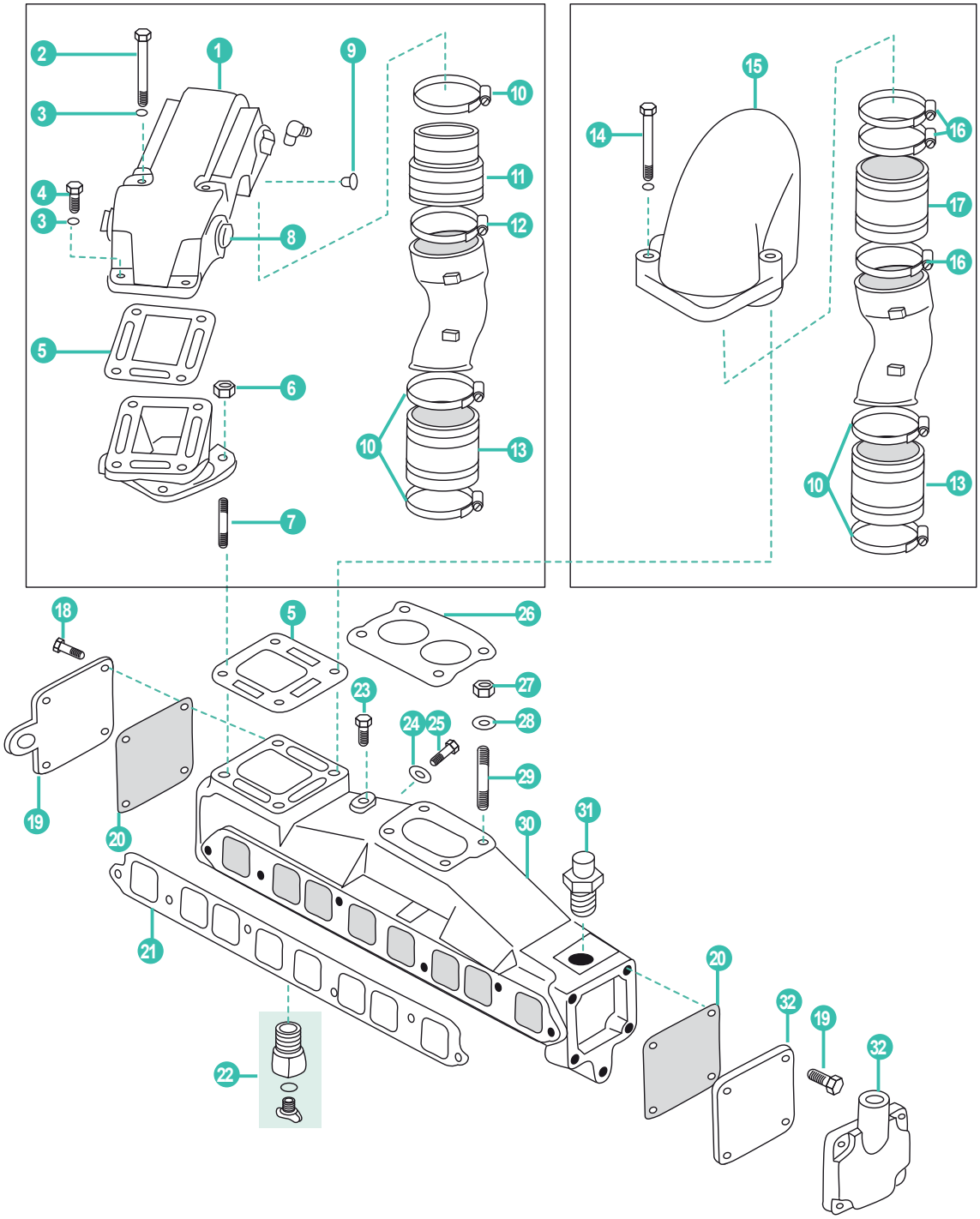

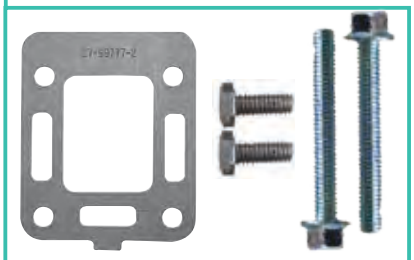

REF	OEM
RECK6325	



REF	OEM
HOT20956-MK	



REF	OEM
HOT20975-MK	

	REF	OEM					UN.
1	REC76325A2	76325A2	CODO ESCAPE	EXHAUST ELBOW ASSEMBLY	GOMITO SCARICO	COUDE D'ECHAPPEMENT	1
2	REC10-72094	10-72094	TORNILLO CODO ESCAPE	SCREW EXHAUST ELBOW	VITE GOMITO SCARICO	VIS COUDE D'ECHAPPEMENT	2
3	REC13-35048	13-35048	ARANDELA	LOCKWASHER	RONDELLA	RONDELLE	4
4	REC10-34354	10-34354	TORNILLO CODO ESCAPE	SCREW EXHAUST ELBOW	VITE GOMITO SCARICO	VIS	2
5	REC27-99777Q02	27-99777Q02	JUNTA COLLECTOR ESCAPE A CODO	GASKET EXHAUST MANIFOLD TO ELBOW OR ADAPTOR	GUARNIZIONE COLLETTORE SCARICO E RISER	JOINT COUDE D'ECHAPPEMENT	2
6	REC46335	46335	TUERCA	FLANGE SERRATED NUT	DADO	ÉCROU	4
7	REC16-56826	16-56826	ESPARRAGO	STUD	PRIGIONIERO	GOUJON	4
8	REC22-41622	22-41622	TAPON	PLUG EXHAUST ELBOW	TAPPO	BOUCHON	4
9	REC22-328022	22-328022	TAPÓN	PLUG	TAPPO	BOUCHON	1
10	GS38320	54-815504256	ABRAZADERA	HOSE CLAMP	FASCETTA	COLLIER INOX	3
11	REC70981A3	70981A3	FUELLE ESCAPE	EXHAUST BELLOW (USE WITH 2-PIECE EXHAUST ELBOW)	MANICOTTO SCARICO	DURITE D'ECHAPPEMENT	1
12	GS38322	54-815504372	ABRAZADERA	HOSE CLAMP	FASCETTA	COLLIER	1
13	REC32-90949T	32-90949T	FUELLE	EXHAUST TUBE	CUFFIA	SOUFFLET	1
14	REC10-668631	10-668631	TORNILLO	SCREW	VITE	VIS	2
15	SED3092610	12076A2	CODO ESCAPE INOX	STAINLESS STEEL EXHAUST ELBOW	GOMITO SCARICO INOX	COUDE D'ECHAPPEMENT INOX	1
	MAR076		CODO ESCAPE	EXHAUST ELBOW ASSEMBLY	GOMITO SCARICO	COUDE D'ECHAPPEMENT	1
16	GS38320	54-815504372	ABRAZADERA 4"	CLAMP BELLOW 4"	FASCETTA 4"	COLLIER 4"	2
17	REC32-44348001	32-44348001	FUELLE ESCAPE 4"	EXHAUST BELLOW EXHAUST ELBOW 4"	CUFFIA SCARICO 4"	SOUFFLET D'ECHAPPEMENT 4"	1
18	RM10-25299	10-824941	TORNILLO COLECTOR ESCAPE	SCREW END CAP TO EXHAUST MANIFOLD	VITE COLLETTORE SCARICO	VIS COLLECTEUR D'ECHAPPEMENT	8
19	REC805629A1	805629A1	TAPA COLECTOR ESCAPE	END CAP EXHAUST MANIFOLD	COPERCHIO COLLETTORE SCARICO	COUVERCLE COLLECTEUR D'ECHAPPEMENT	1
20	REC27-807218	27-807218	JUNTA	GASKET END CAP	GUARNIZIONE COPERCHIO COLLETTORE	JOINT COUVERCLE COLLECTEUR	2
21	REC27-96429	27-96429	JUNTA CODO ESCAPE	GASKET EXHAUST MANIFOLD	GUARNIZIONE GOMITO SCARICO	JOINT COUDE D'ÉCHAPPEMENT	1
22	REC13980	22-806608A1	RACORD COLECTOR	STRAIGHT DRAIN KIT	RACCORDO COLLETTORE	RACCORD COLLECTEUR	1
23	REC22-36382	22-36382	TAPÓN	PLUG	TAPPO	BOUCHON	1
24	REC13-35048	21-20553	ARANDELA	WASHER	FASCETTA	RONDELLE	2
25	REC10-53728	10-53728	TORNILLO	SCREW (NEW DESIGN)	VITE	VIS	3
26	REC27-8079821	27-8079821	JUNTA BASE CARBURADOR (MERCAB)	GASKET CARBURETOR BASE (MERCAB)	GUARNIZIONE BASE CARBURATORE (MERCAB)	JOINT DE BASE CARBURATEUR (MERCAB)	1
	REC27-64692	27-64692	JUNTA BASE CARBURADOR (ROCHESTER)	GASKET CARBURETOR BASE (ROCHESTER)	GUARNIZIONE BASE CARBURATORE (ROCHESTER)	JOINT DE BASE CARBURATEUR (ROCHESTER)	1
27	REC11-862902	11-862902	TUERCA	LOCK NUT CARBURETOR	CHIUSURA	ÉCROU	4
28	REC12-20084	12-20084	ARANDELA	WASHER CARBURETOR	RONDELLA	RONDELLE	4
29	REC16-70236	16-70236	ESPARRAGO	STUD CARBURETOR	PRIGIONIERO	GOUJON	4
30	BAMC-1-95862	95862A5	COLECTOR ESCAPE (ROCHESTER)	EXHAUST MANIFOLD (ROCHESTER)	COLLETTORE SCARICO (ROCHESTER)	COLLECTEUR D'ECHAPPEMENT (ROCHESTER)	1
	HOT20956	860235A04	COLECTOR ESCAPE (MERCAB)	EXHAUST MANIFOLD (MERCAB)	COLLETTORE SCARICO (MERCAB)	COLLECTEUR D'ECHAPPEMENT (MERCAB)	1
31	REC22-866725	22-866725	ENTRONQUE 3/4-14x1 (LATÓN)	STRAIGHT FITTING 3/4-14 x 1 (BRASS)	RACCORDO 3/4-14x1 (OTTONE)	RACCORD COLLECTEUR (LAITON)	1
32	HGE4870	73813A1	TAPA COLECTOR ESCAPE	END CAP - EXHAUST MANIFOLD	COPERCHIO COLLETTORE SCARICO	COUVERCLE COLLECEUR D'ECHAPPEMENT	1
	REC60252A2	60252A2	TAPA COLECTOR PIPA	MANIFOLD CAP PIPE	COPERCHIO COLLETTORE SCARICO	PLAQUE A/TUYAU	1

Para determinar el tipo de carburador (Rochester / Mercab) ver medida de junta:
To determine the type of carburetor (Rochester / Mercab) see joint measurement:
Per determinare il tipo di carburatore (Rochester / Mercab) vedi misurazione di guarnizione:
Pour determinaire le carburateur (Rochester / Mercab) voir la mesure de joint:

P. 137

3.0L & 3.0LX GM 181
4 CYL (1990+)

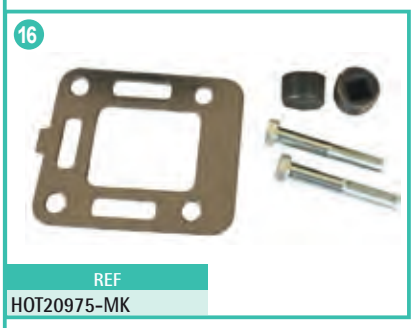

REF
HOT20975-MK

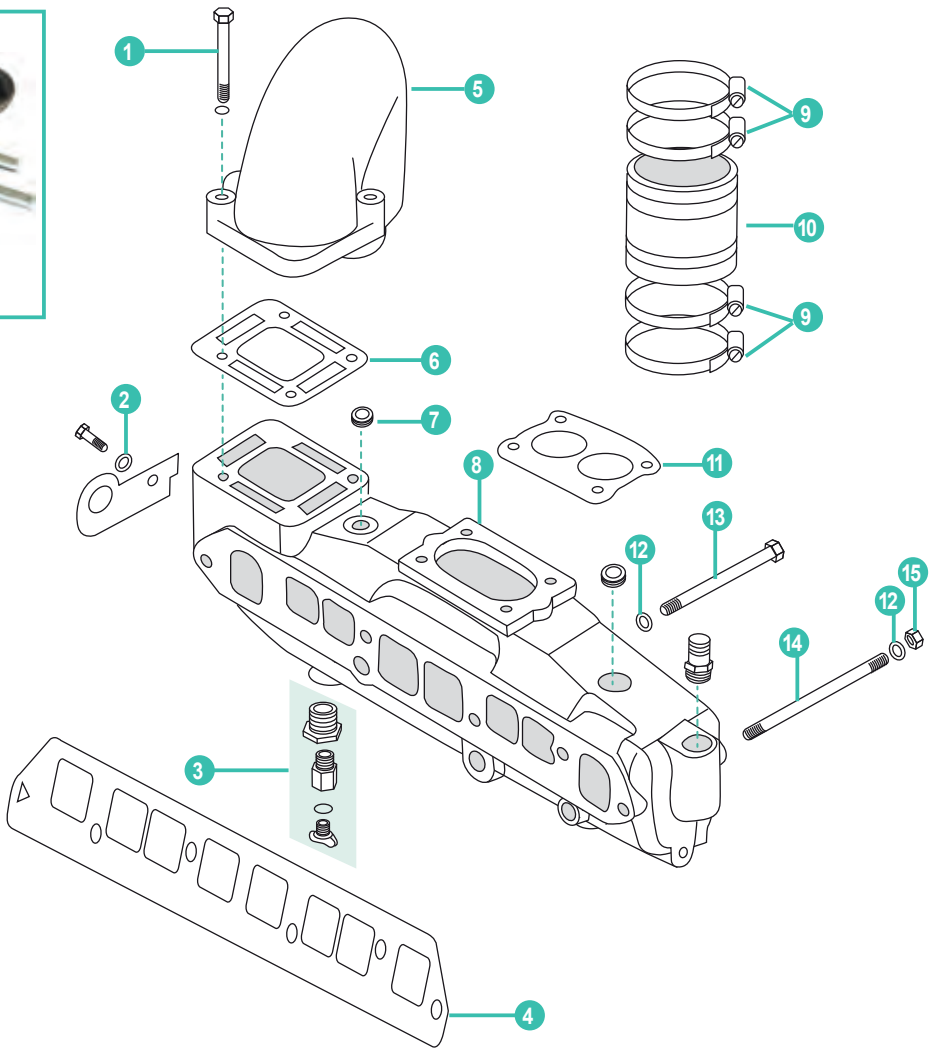

	REF	OEM					UN.
1	REC10-668631	10-668631	TORNILLO	SCREW	VITE	VIS	2
2	REC12-20084	12-20084	ARANDELA	WASHER	RONDELLA	RONDELLE	1
3	REC13980	22-806608A1	RACORD COLECTOR	STRAIGHT DRAIN KIT	RACCORDO COLLETTORE	RACCORD COLLECTEUR	1
4	REC27-815528	27-815528	JUNTA COLECTOR	GASKET EXHAUST MANIFOLD	GUARNIZIONE COLLETTORE	JOINT COLLECTEUR	1
5	MAR076	12076A2	CODO ESCAPE	EXHAUST ELBOW	GOMITO DI SCARICO	COUDE D'ÉCHAPPEMENT	1
	SED3092610	12076A2	CODO ESCAPE INOX	EXHAUST ELBOW STAINLESS STEEL	GOMITO DI SCARICO INOX	COUDE D'ÉCHAPPEMENT INOX.	1
6	REC27-99777Q02	27-99777Q02	JUNTA CODO ESCAPE A COLECTOR	GASKET EXHAUST MANIFOLD TO ELBOW	GUARNIZIONE COLLETTORE A GOMITO	JOINT COLLECTEUR À COUDE D'ÉCHAPPEMENT	1
7	REC22-32803	22-32803	TAPÓN	CAP	TAPPO	BOUCHON	1
8	REC860235A03	860235A03	COLECTOR ESCAPE	EXHAUST MANIFOLD	COLLETTORE DI SCARICO	COLLECTEUR D'ÉCHAPPEMENT	1
9	GS38320	54-815504256	ABRAZADERA FUELLE 4"	CLAMP 4"	FASCETTA 4"	COLLIER 4"	2
10	REC32-44348001	32-44348001	FUELLE CODO ESCAPE 4"	EXHAUST BELLOW 4"	CUFFIA GOMITO DI SCARICO 4"	SOUFFLET COUDE D'ÉCHAPEMENT 4"	1
11	REC27-8079821	27-8079821	JUNTA CARBURADOR MERCAB (NO TKS)	CARBURATOR GASKET MERCAB (NO TKS)	GUARNIZIONE CARBURATORE MERCAB (NO TKS)	JOINT CARBURATEUR MERCAB (NO TKS)	1
12	REC13-35048	21-20553	ARANDELA	WASHER	RONDELLA	RONDELLE	5
13	REC10-53728	10-53728	TORNILLO	SCREW	VITE	VIS	2
14	REC16-806300	16-806300	ESPARRAGO	STUD	PRIGIONIERO	GOUJON	3
15	REC46335	46335	TUERCA	FLANGE SERRATED NUT	DADO	ÉCROU	3
16	HOT20975-MK		KIT MONTAJE	MOUNTING KIT	KIT DI MONTAGGIO	KIT DE MONTAGE	

3.0L MPI

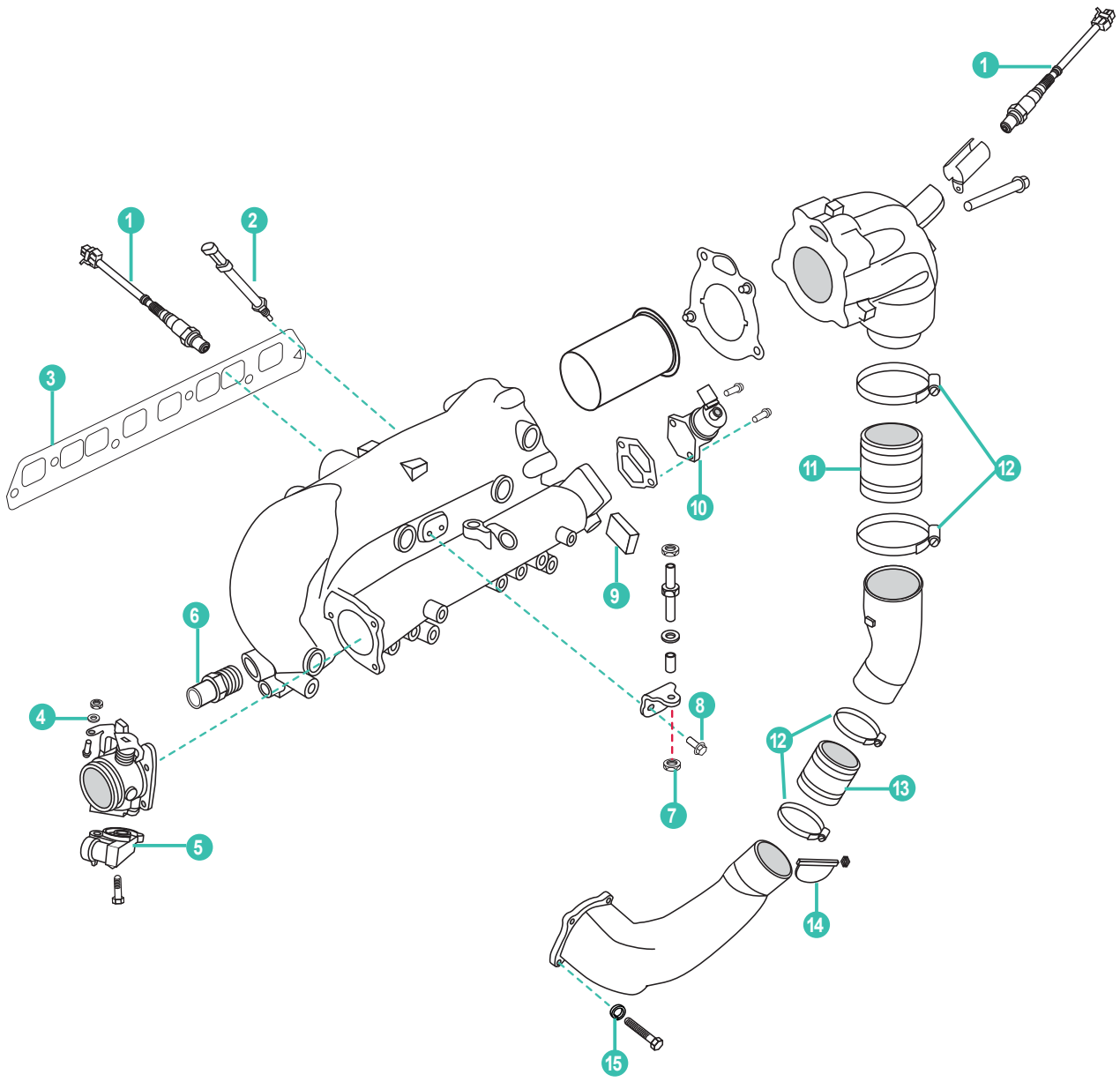

	REF	OEM					UN.
1	REC8M2003959	8M2003959	SENSOR DE OXÍGENO	OXIGEN SENSOR	SENSORE OSSIGENO	SENSEUR OXIGENE	2
2	REC8M0148668	8M0148668	SENSOR TEMPERATURA	TEMPERATURE SENSOR	SENSORE TEMPERATURA	SONDE TEMPERATURE	1
3	REC27-815528 REC27-815528	27-815528	JUNTA COLECTOR ESCAPE	MANIFOLD GASKET	GUARNIZIONE COLLETTORE SCARICO	JOINT DE COLLECTEUR D'ÉCHAPPEMENT	1
4	REC13-35048	13-35048	ARANDELA	WASHER	RONDELLA	RONDELLE	1
5	REC8M0125617	8M0125617	SENSOR DE POSICIÓN	POSITION SENSOR	SENSORE POSIZIONE	SENSEUR POSITION	1
6	REC22-866725	22-866725	RACORD COLECTOR	STRAIGHT FITTING	RACCORDO COLLETTORE	RACCORD COLLECTEUR	1
7	REC11-8267089	11-8267089	TUERCA	NUT	DADO	ÉCROU	1
8	REC10-816928	10-816928	TORNILLO M6X16	SCREW M6X16	VITE M6X16	VIS M6X16	2
9	REC35-865266	35-865266	FILTRO	FILTER	FILTRO	FILTRE	1
10	REC862998	862998	VÁLVULA AIRE IDLE	VALVE IDLE AIRE	VALVOLA IDLE ARIA	SOUPAPE IDLE AIR	1
11	REC32-44348001	32-44348001	TUBO ESCAPE	TUBE EXHASUT	TUBO SCARICO	TUYAU ÉCHAPPEMENT	1
12	GS38320	54-815504272	ABRAZADERA	CLAMP	FASCETTA	COLLIER	8
13	REC32-90949T	32-90949T	TUBO ESCAPE	TUBE EXHAUST	TUBO SCARICO	TUYAU ÉCHAPPEMENT	1
14	REC60930	60930	PALOMILLA ESCAPE	SHUTTER WATER EXHAUST	FARFALLA SCARICO	CLAPET ÉCHAPPEMENT	1
15	PAGB/T93-10	13-41471	ARANDELA	LOCKWASHER	RONDELLA	RONDELLE	4

165, 170, 180, 190, 470, 485, 488
3.7L & 3.7LX MCM 224 CID 4 CYL (1980-89)

17



REF
HOT20975-MK

18



REF
HOT20905-MK

19



REF
HOT20937-MK

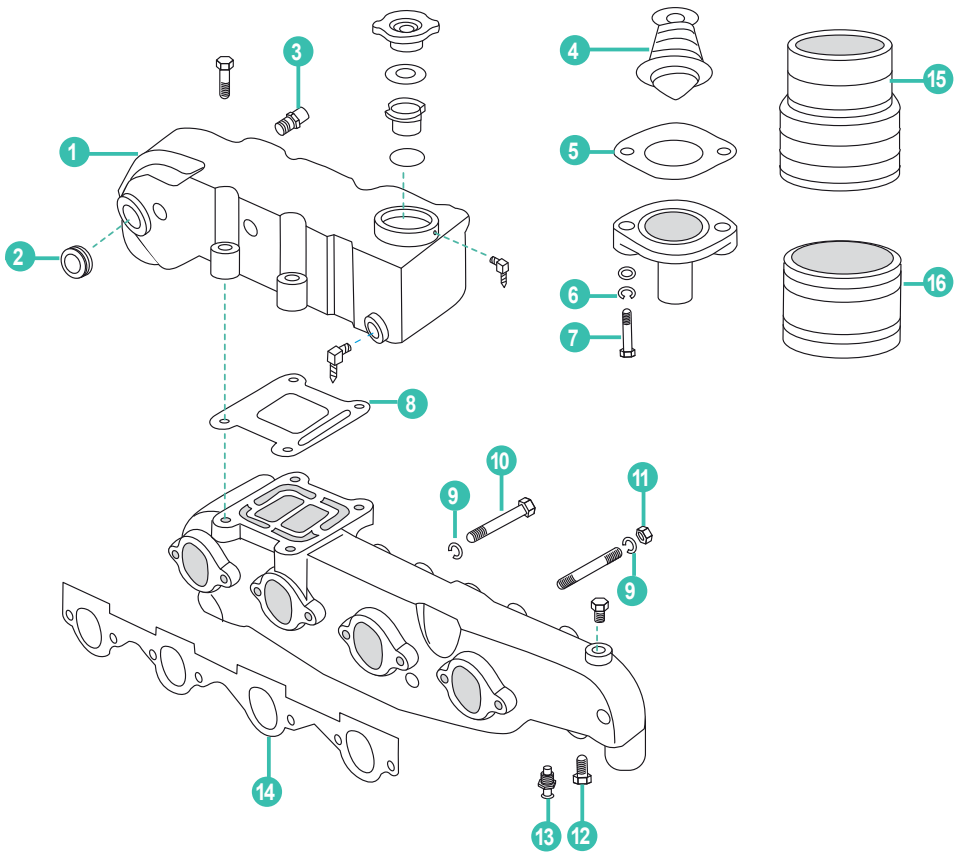

	REF	OEM					UN.
1	HOT20937	98562A6	CODO PARA COLECTOR ALUMINIO	EXHAUST ELBOW FOR ALUM. MANIFOLD	GOMITO PER COLLETTORI IN ALLUMINO	COUDE D'ÉCHAPPEMENT AL	1
	HOT20905	90880A2	CODO PARA COLECTOR HIERRO	ELBOW FOR CAST. MANIFOLD	GOMITO PER COLLETTORI IN GHISA	COUDE D'ÉCHAPPEMENT FE	1
2	REC22-428611	22-428611	TAPÓN	CAP	TAPPO	BOUCHON	1
3	REC22-866725	22-866725	RACOR COLECTOR	HOSE FITTING	RACCORDO COLLETTORE	RACCORD COLLECTEUR	1
4	REC99155T2	99155T2	TERMOSTATO	THERMOSTAT	TERMOSTATO	THERMOSTAT	1
5	REC27-89656-1	27-896561	JUNTA	GASKET	GUARNIZIONE	JOINT	1
6	REC13-39107	13-39107	ARANDELA	LOCKWASHER	CHIUSURA	RONDELLE	2
7	REC10-73657	10-73657	TORNILLO	SCREW	VITE	VIS	2
8	REC27-18272	27-18272	JUNTA CODO A COLECTOR	GASKET - ELBOW TO MANIFOLD	GUARNIZIONE COLLETTORE GOMITO	JOINT COUDE À COLLECTEUR	1
	REC27-856705	27-856705	JUNTA COLECTOR DE HIERRO	GASKET FOR IRON MANIFOLD	GUARNIZIONE PER COLLETORE IN GHISA	JOINT COLLECTEUR FE	1
9	REC13-35048	13-35048	ARANDELA	LOCKWASHER	RONDELLA	RONDELLE	3
10	REC22-73379	10-74727	TORNILLO	SCREW	VITE	VIS	3
11	REC46335	46335	TUERCA	FLANGE SERRATED NUT	DADO	ÉCROU	1
12	REC22-32803	22-32803	TAPÓN	PLUG	TAPPO	BOUSCHON	1
13	REC15995	15995	SENSOR TEMPERATURA	TEMPERATURE SENDER	SENSORE TEMPERATURA	SONDE TEMPÉRATURE	1
14	REC27-68715	27-68715	JUNTA COLECTOR ESCAPE	GASKET - EXHAUST MANIFOLD	GUARNIZIONE COLLETTORE SCARICO	JOINT COLLECTEUR D'ÉCHAPEMENT	1
15	REC70981A3	70981A3	FUELLE ESCAPE	EXHAUST BELLOW	CUFFIA SCARICO	SOUFFLET D'ÉCHAPPEMENT	1
16	REC32-90949T	32-90949T	FUELLE ESCAPE	EXHAUST BELLOW	CUFFIA SCARICO	SOUFFLET D'ÉCHAPPEMENT	1
17	HOT20975-MK		KIT PARA COLECTOR DE FUNDICIÓN	KIT FOR CAST IRON MANIFOLD	KIT VITERIA PER COLLETORI IN GHISA	KIT DE MONTAGE FE FORGÉ	
18	HOT20905-MK		KIT MONTAJE CODO HOT20905	MOUNTING KIT ELBOW HOT20905	KIT DI MONTAGGIO GOMITO HOT20905	KIT DE MONTAGE COUDE HOT20905	
19	HOT20937-MK		KIT MONTAJE CODO HOT20937	MOUNTING KIT ELBOW HOT20937	KIT DI MONTAGGIO GOMITO HOT20937	KIT DE MONTAGE COUDE HOT20937	

GM 160, 165, 200CID, 250, 292CID
6 CYL IN LINE

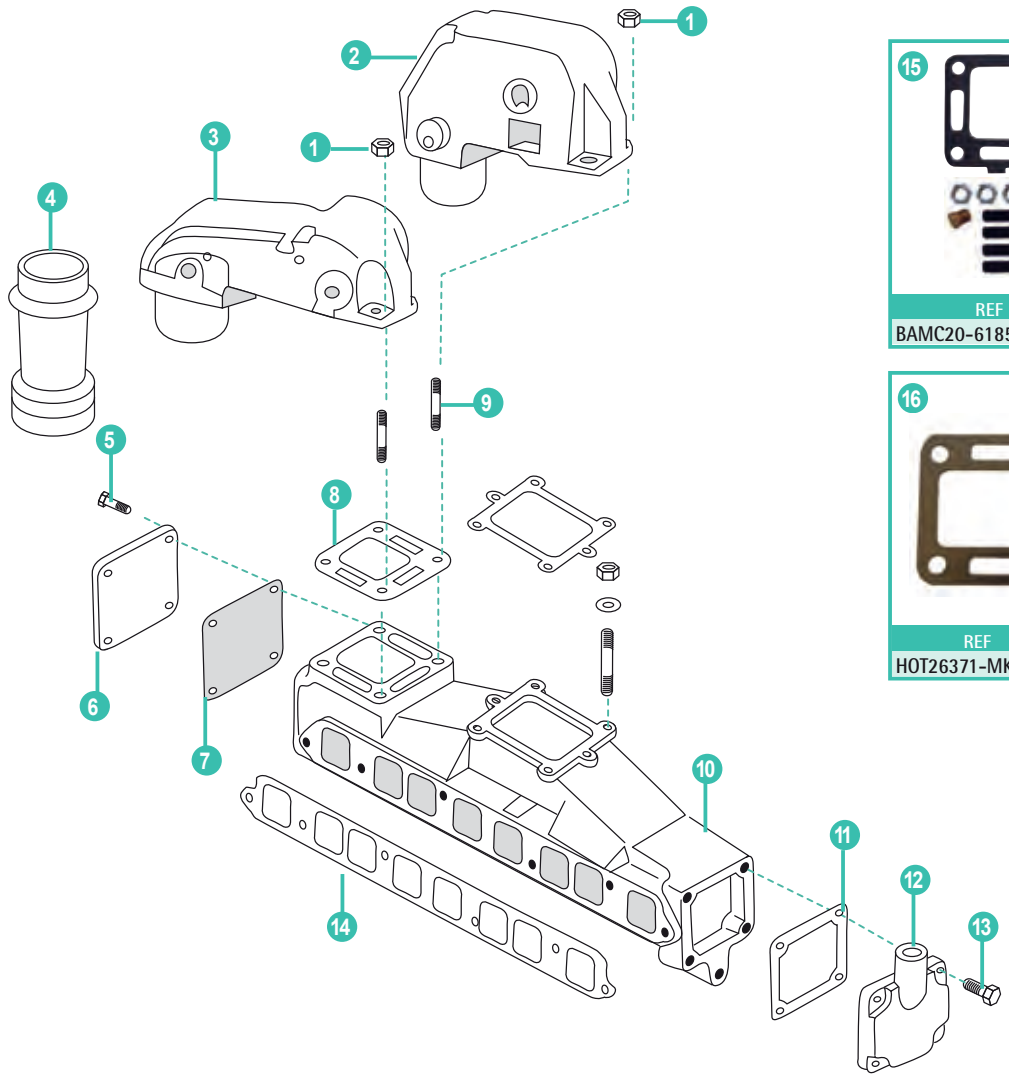



REF
BAMC20-61851A3

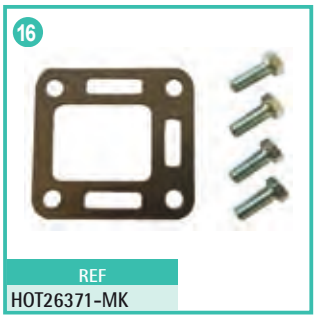

REF
HOT26371-MK

	REF	OEM					UN.
1	REC46335	46335	TUERCA	NUT	DADO	ÉCROU	4
2	HOT20971	76351A04	CODO ESCAPE 90º 3"	EXHAUST ELBOW ASSY 3" 90º	GOMITO DI SCARICO 90º 3"	COUDE D'ÉCHAPPEMENT 90º 3"	1
3	REC76325A2	76325A2	CODO ESCAPE 90º 3"	EXHAUST ELBOW ASSY 3" 90º	GOMITO DI SCARICO 90º 3"	COUDE D'ÉCHAPPEMENT 90º 3"	1
4	REC53114A1	53114A1	FUELLE ESCAPE	EXHAUST BELLOW	CUFFIA DI SCARICO	SOUFFLET D'ÉCHAPPEMENT	1
5	RM10-25299	10-824941	TORNILLO	SCREW END CAP	VITE	VIS	4
6	HGE4870	73813A1	TAPA COLECTOR ESCAPE	END CAP EXHAUST MANIFOLD	COPERCHIO COLLETTORE SCARICO	COUVERCLE COLLECTEUR D'ÉCHAPPEMENT	1
7	REC27-807218	27-807218	JUNTA TAPA	GASKET END CAP	GUARNIZIONE COPERCHIO	JOINT DE COUVERCLE	1
8	REC27-99777Q02	27-99777Q02	JUNTA COLECTOR A CODO	GASKET EXHAUST MANIFOLD TO ELBOW	GUARNIZIONE INTERMEDIA	JOINT COLLECTEUR À COUDE	1
9	REC16-49545	16-49545	ESPÁRRAGO	STUD	PRIGIONIERO	GOUJON	4
10	BAMC-1-58759	58759A14	COLECTOR ESCAPE	EXHAUST MANIFOLD ASSEMBLY	COLLETTORE SCARICO	COLLECTEUR D'ÉCHAPPEMENT	1
11	REC27-480431	27-480431	JUNTA TAPA	GASKET END CAP	GUARNIZIONE COPERCHIO	JOINT COUVERCLE	1
12	REC60252A2	60252A2	TAPA COLECTOR	END CAP EXHAUST MANIFOLD	COPERCHIO COLLETTORE	COUVERCLE COLLECTEUR	1
13	REC10-37562	10-37562	TORNILLO	SCREW	VITE	VIS	4
14	FEL17319	27-46401	JUNTA COLECTOR ADMISIÓN/ESCAPE	GASKET INTAKE/EXHAUST MANIFOLD	GUARNIZIONE COLLETTORE ASPIRAZIONE / SCARICO	JOINT COLLECTEUR ADMISSION/ÉCHAPPEMENT	1
15	BAMC20-61851A3		KIT SUPLEMENTO CODO DE 76mm	RISE MOUNTING KIT 3"	KIT DISTANZIALI GOMITO DA 76 mm	KIT REHAUSSE 3"	
16	HOT26371-MK		KIT MONTAJE CODO HOT26371	MOUNTING KIT ELBOW HOT26371	KIT DI MONTAGGIO GOMITO HOT26371	KIT MONTAGE COUDE HOT20371	

175, 185, 205, 262 MAG, 4.3L, 4.3LX, 4.3LH, 4.3LXH, 4.3 EFI, 4.3 MPI, GM 262 CID V6

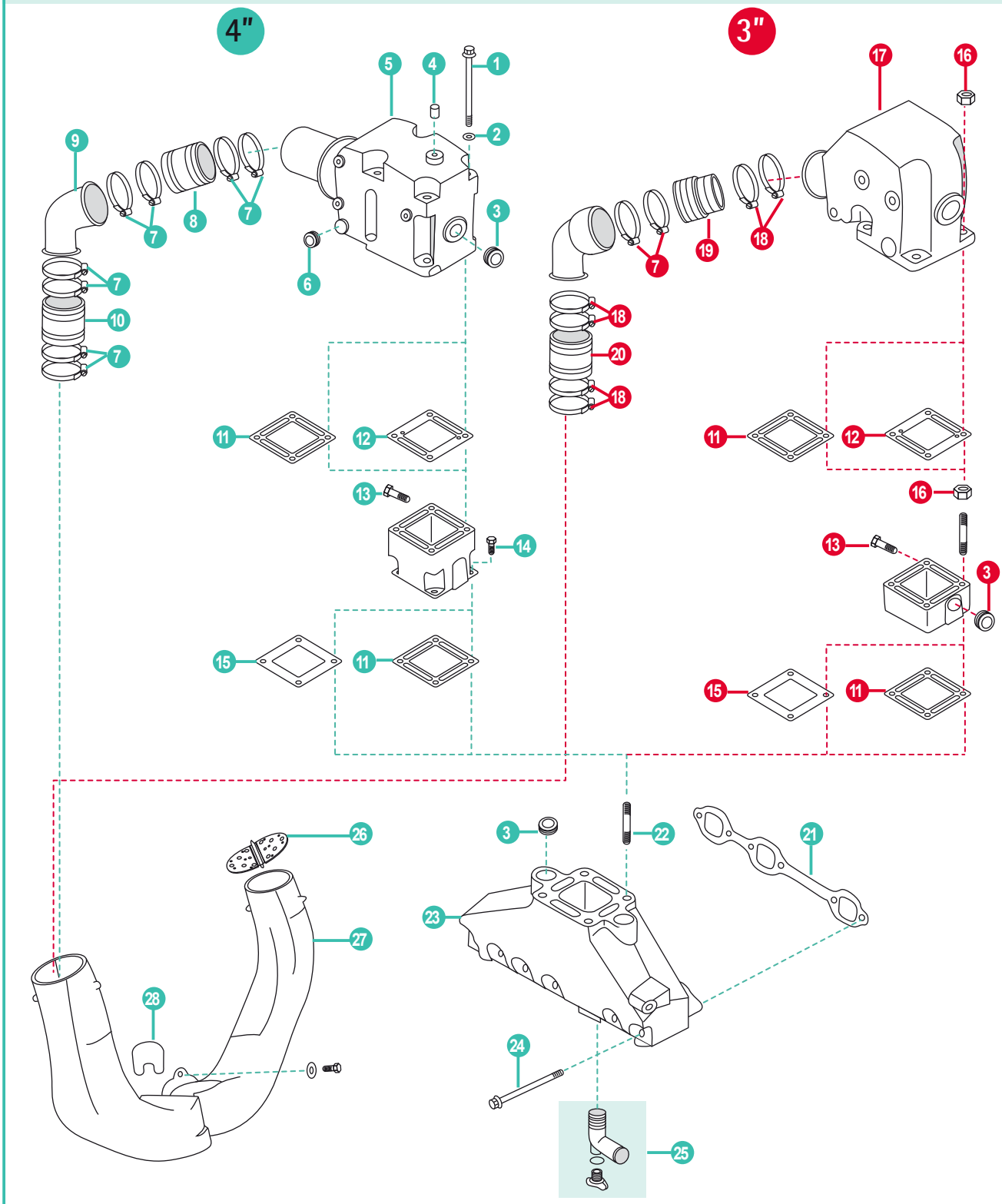

29	30	31	32
	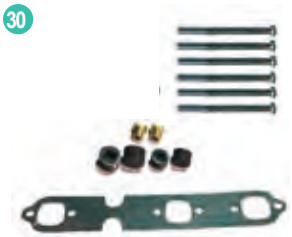	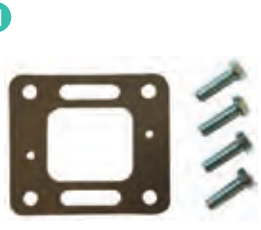	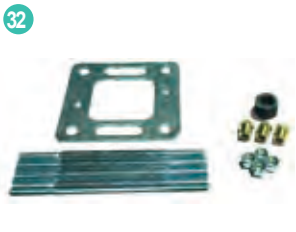
REF RECK8503	REF HOT20952-MK	REF HOT28503-MK	REF HOT20976-MK

	REF	OEM					UN.
1	REC10-43749	10-43749	TORNILLO	SCREW	VITE	VIS	4
2	REC13-35048	13-35048	ARANDELA CIERRE	LOCKWASHER	CHIUSURA	RONDELLE	4
3	REC22-41622	22-41622	TAPÓN ACERO	PLUG (STEEL)	TAPPO IN ACCIAIO	BOUCHON EN ACIER	2
	REC22-428611	22-428611	TAPÓN BRONCE	PLUG (BRASS)	TAPPO IN BRONZO	BOUCHON EN BRONZE	2
4	REC22-73379	22-73379	TAPÓN	PLUG	TAPPO	BOUCHON	1
5	MAR988	807988A03	CODO 4" 7º	ELBOW 4" 7º	GOMITO 4" 7º	COUDE 4" 7º	1
	SED3092600	807988A3	CODO INOX	ELBOW INOX	GOMITO INOX	COUDE INOX	1
6	REC22-36382	22-36382	TAPÓN	PLUG	TAPPO	BOUCHON	1
7	GS38322	54-815504372	ABRAZADERA	CLAMP	FASCETTA	COLLIER	8
8	REC32-44348001	32-44348001	FUELLE ESCAPE 4"	EXHAUST BELLOW 4"	CUFFIA DI SCARICO 4"	SOUFFLET D'ÉCHAPPEMENT 4"	1
9	BAMC-20-14478	14478T01	TUBO 4"	TUBE 4"	TUBO 4"	TUYAU 4"	1
10	REC32-14358001	32-14358001	FUELLE ESCAPE	EXHAUST BELLOW	CUFFIA DI SCARICO	SOUFFLET D'ÉCHAPPEMENT	1
11	REC27-863726	27-863726	JUNTA	GASKET MANIFOLD	GUARNIZIONE	JOINT COLLECTEUR	1
12	REC27-863724Q	27-863724Q	JUNTA COLECTOR REESTRICTOR	GASKET MANIFOLD FOR RAW WATER	GUARNIZIONE PER CIRCUITO	JOINT DE COUDE D'ECHAPPEMENT	1
13	REC22-328022	22-328022	TAPÓN	PLUG	TAPPO	BOUCHON	1
14	REC10-865982005	10-865982005	TORNILLO	SCREW	VITE	VIS	4
15	REC27-8637251	27-8637251	JUNTA COLECTOR CIRCUITO AGUA DULCE	GASKET MANIFOLD FOR FRESH WATER COOLING	GUARNIZIONE PER CIRCUITO CHIUSO	JOINT DE COUDE D'ECHAPPEMENT	1
16	REC46335	46335	TUERCA CODO	NUT FLANGE SERRATED NUT	DADO GOMITO	ÉCROU COUDE	4
17	REC98504A3	98504A3	CODO 3" 15º	ELBOW 3" 15º	GOMITO 3" 15º	COUDE 3" 15º	1
18	GS38320	54-815504256	ABRAZADERA	CLAMP	FASCETTA	COLLIER	6
19	REC70981A3	70981A3	FUELLE ESCAPE 3"	EXHAUST BELLOW 3"	CUFFIA DI SCARICO 3"	SOUFFLET D'ÉCHAPPEMENT 3"	1
20	REC32-90949T	32-90949T	FUELLE ESCAPE 3"	EXHAUST BELLOW 3"	CUFFIA DI SCARICO 3"	SOUFFLET D'ÉCHAPPEMENT 3"	1
21	REC27-99757	27-99757	JUNTA COLECTOR	GASKET EXHAUST MANIFOLD	GUARNIZIONE COLLETTORE	JOINT COLLECTEUR D'ÉCHAPPEMENT	1
22	REC16-49545	16-49545	ESPARRAGO DE ACERO	STUD (STEEL)	PRIGIONIERO IN ACCIAO	GOUJON EN ACIER	4
23	MAR746	99746A17	COLECTOR	MANIFOLD	COLLETTORE	COLLECTEUR	1
24	REC10-53728	10-53728	TORNILLO	SCREW	VITE	VIS	6
25	REC862210A01	22-862210A01	KIT TAPÓN Y CONDUCTO	HOSE FITTING WITH DRAIN PLUG KIT	KIT TAPPO E CONDOTTO	KIT BOUCHON ET TUBE	1
26	REC807166A1	807166A1	PALOMILLA ESCAPE	WATER SHUTTER	FARFALLA SCARICO	CLAPET ÉCHAPPEMENT	1
27	RM807130A4	807130A4	CUERNOS DE ESCAPE	EXHAUST PIPE	CORNA DI SCARICO	CORNE D'ÉCHAPPEMENT	1
28	REC41802	41802	JUNTA	GASKET	GUARNIZIONE	JOINT	1
29	RECK8503		KIT TORNILLOS CODO	EXHAUST ELBOW MOUNTAING KIT	KIT VITI GOMITO	KIT VITI GOMITO	
30	HOT20952-MK		KIT MONTAJE PARA HOT20952	MOUNTING KIT ELBOW HOT20952	KIT MONTAGGIO GOMITO HOT20952	KIT DE MONTAGE HOT20952	
31	HOT28503-MK		KIT MONTAJE PARA HOT20970	MOUNTING KIT ELBOW HOT20970	KIT MONTAGGIO GOMITO HOT20970	KIT DE MONTAGE HOT20970	
32	HOT20976-MK		KIT MONTAJE PARA MAR988	MOUNTING KIT ELBOW MAR988	KIT MONTAGGIO GOMITO MAR988	KIT DE MONTAGE MAR988	
33	REC32175		KIT TORNILLOS Y JUNTAS COLECTOR V6	EXHAUST MANIFOLD MOUNTING KIT	KIT VITE E GUARNIZIONI COLLETTORE V6	KIT VISSERIE COLLECTEUR V6 + JOINT	
34	REC53400		KIT TORNILLOS CODO Y JUNTA	EXHAUST ELBOW MOUNTAING KIT	KIT VITI GOMITO	KIT VISSERIE POUR COUDE	
35	HOT20985	93322A12AV	KIT ELEVADOR 152 mm	6" RISER KIT	KIT DISTANZIALE 152mm	KIT REHAUSSE 6"	
36	MAR3320PAR	93320A13	KIT ELEVADOR 76 mm	3" RISER KIT	KIT DISTANZIALE 76 mm	KIT REHAUSSE 3"	

33



REF
REC32175

34



REF
REC53400

35



REF
HOT20985

36



REF
MAR3320PAR

4.3L CARB MPI ALPHA/BRAVO

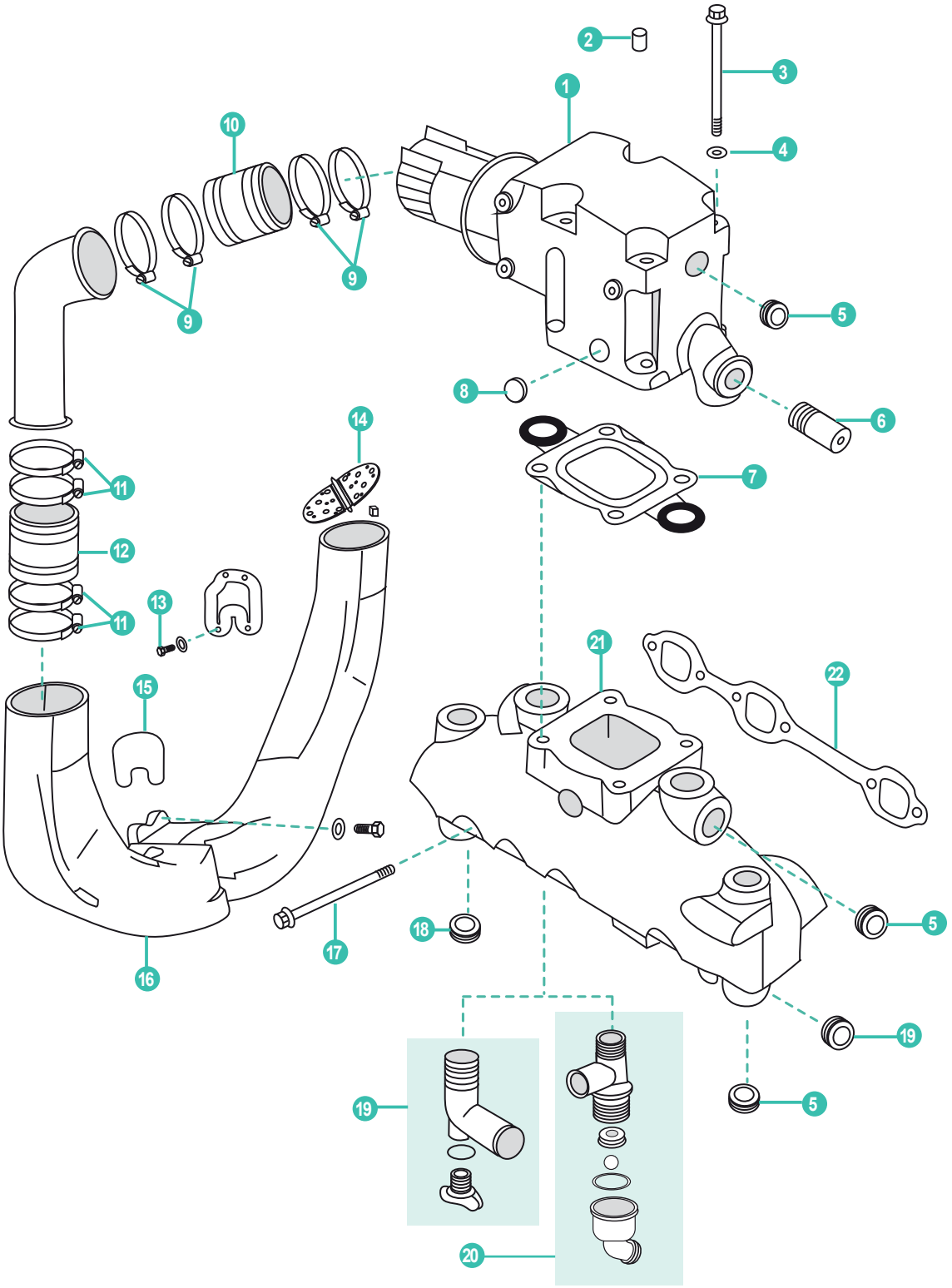



REF
RECK309



REF
REC270



REF
RECK591

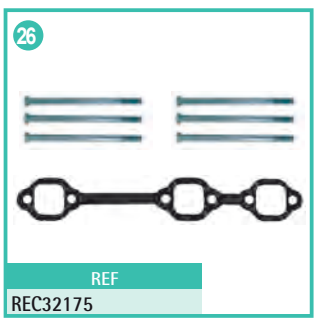

REF
REC32175

	REF	OEM					UN.
	MAR309	864309T02	CODO BAJO 17 cm	ELBOW LOW 17 cm	GOMITO BASSO 17 cm	COUDE BASSE 17 cm	2
1	MAR591	864591T02	CODO ALTO 20,5 cm	ELBOW HIGH 20,5 cm	GOMITO ALTO 20,5 cm	COUDE HAUT 20,5 cm	2
	SED3095400	864309T02	CODO BAJO INOX	ELBOW LOW SS	GOMITO BASSO INOX	COUDE BASSE INOX	2
	SED3095500	864591T02	CODO ALTO INOX	ELBOW HIGH SS	GOMITO ALTO INOX	COUDE HAUT INOX	2
2	REC22-73379	22-73379	TAPÓN	PLUG	TAPPO	BOUCHON	1
3	REC10-43749	10-43749	TORNILLO	SCREW	VITE	VIS	8
4	REC13-35048	13-35048	ARANDELA	LOCK WASHER	RONDELLA	RONDELLE	8
5	REC22-428611	22-428611	TAPÓN	FITTING	TAPPO	BOUCHON	8
6	REC22-866725	22-866725	RACORD COLECTOR	STRAIGHT FITTING	RACCORDO COLLETTORE	RACCORD COLLECTEUR	1
7	REC270	27-684547A02	JUNTA CODO - COLECTOR	ELOW-MANIFOLD GASKET	GUARNIZIONE INTERMEDIA	JOINT DE COUDE ECHAPPEMENT	1
8	REC19-864689	19-864689	TAPÓN	PLUG	TAPPO	BOUCHON	2
9	GS38310	54-815504456	ABRAZADERA	CLAMP	FASCETTA	COLLIER	8
10	REC32-44348001	32-44348001	FUELLE ESCAPE	EXHAUST BELLOW	MANICOTTO SCARICO	SOUFFLET D'ÉCHAPPEMENT	2
11	GS38320	54-815504456	ABRAZADERA	CLAMP	FASCETTA	COLLIER	8
12	REC32-14358001	32-14358001	FUELLE ESCAPE COLECTOR	EXHAUST BELLOW	MANICOTTO SCARICO COLLETTORE	SOUFFLET D'ÉCHAPPEMENT COLLECTEUR	2
13	REC10-98794	10-98794	TORNILLO	SCREW COVER	VITE	VIS	4
14	REC807166A1	807166A1	PALOMILLA ESCAPE	WATER SHUTTER	FARFALLA SCARICO	CLAPET ÉCHAPPEMENT	2
15	REC41802	41802	RETÉN TRANSON	TRANSON GASKET	GUARNIZIONE TRANSON	JOINT DE TRANSOM	1
16	RM807130A4	807130A4	CUERNOS DE ESCAPE	EXHAUST PIPE	CORNA DI SCARICO	CORNE D'ÉCHAPPEMENT	1
17	REC10-53728	10-53728	TORNILLO	SCREW	VITE	VIS	6
18	PAF15-07010004	479452	TAPÓN 1/8"	PLUG 1/8"	TAPPO 1/8"	BOUCHON 1/8"	1
19	REC862210A01	22-862210A01	KIT TAPÓN Y CONDUCTO	ELBOW AND PLUG KIT	KIT TAPPO E TUBO	COUDE DRAIN POUR COLLECTEUR	1
20	REC22-863786A1		CONECTOR	DRAIN FITTING	CONNETTORE	CONNECTEUR T	
21	MAR612	864612T01	COLECTOR	MANIFOLD	COLLETTORE	COLLECTEUR	2
22	REC27-99757	27-99757	JUNTA COLECTOR	MANIFOLD GASKET	GUARNIZIONE COLLETTORE	JOINT COLLECTEUR	2
23	RECK309		KIT TORNILLOS CODO Y JUNTA	ELBOW GASKET & BOLT KIT	KIT VITERIA GOMITO E GUARNIZIONE	KIT DE MONTAGE	
24	REC270		KIT JUNTA CODO-COLECTOR	ELBOW-MANIFOLD GASKET	GUARNIZIONE GOMITO-COLLETTORE	JOINT DE COUDE ÉCHAPPEMENT	
25	RECK591		KIT PARA MAR591	KIT FOR MAR591	KIT PER MAR591	KIT POUR MAR591	
26	REC32175		KIT TORNILLOS COLECTOR Y JUNTA	MANIFOLD GASKET & ELBOW KIT	KIT VITERIA COLLETTORE E GUARNIZIONE	KIT VISSERIE COLLECTEUR V6 + JOINT	
27	MAR929 HGE4929	864929A3	KIT RISER 3"	KIT RISER 3"	KIT GOMITO 3"	KIT REHAUSSE 3"	
28	BAMC-20-864908A1	864908A1	KIT RISER 6"	KIT RISER 6"	KIT GOMITO 6"	KIT REHAUSSE 6"	

27



REF	OEM
MAR929 HGE4929	864929A3

28

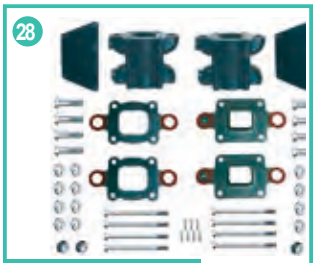

REF
BAMC-20-864908A1

262 MAG (TBI), 4.3L (GEN+), 4.3 L EFI (GEN+), 4.3 LH (GEN+), 4.3LX (GEN+), GM 262 V6 (1996-01)

PIEZAS NECESARIAS PARA SUBSTITUIR EL COLECTOR-CODO PARA V6

NEEDS PARTS TO REPLACE V6 MANIFOLD-ELBOW

PEZZI NECESSARI PER SOSTITUIRE IL COLLETTORE PER V6

PIÈCES NÉCESSAIRES POUR REMPLACER LE COLLECTEUR-COUDE POUR V6























	REF	OEM					UN.
1	MAR988	807988A03	CODO 4"	ELBOW 4"	GOMITO 4"	COUDE 4"	2
2	REC32-44348001	32-44348001	FUELLE ESCAPE SUPERIOR	UPPER EXHAUST BELLOW	CUFFIA SCARICO SUPERIORE	SOUFFLET ECHAPPEMENT SUPÉRIEUR	2
3	REC32-14358001	32-14358001	FUELLE ESCAPE INFERIOR	LOWER EXHAUST BELLOW	CUFFIA SCARICO INFERIORE	SOUFFLET ECHAPPEMENT INFÉRIEUR	2
4	MAR746	99746A17	COLECTOR	MANIFOLD	COLLETTORE	COLLECTEUR	2
5	BAMC-20-14478	14478T01	CURVA ESCAPE V6	EXHAUST ELBOW ASSY	CURVA SCARICO V6	COUDE DE CONVERSION V6/262	2
6	REC862210A01	22-862210A01	KIT TAPÓN Y CONDUCTO	HOSE FITTING W/DRAIN PLUG KIT	KIT RUBINETTO	COUDE DRAIN POUR COLLECTEUR	2
7	GS38322	54-815504372	ABRAZADERA INOX	INOX CLAMP	FASCETTA INOX	COLLIER INOX	8
8	REC32175		KIT JUNTA Y TORNILLOS	GASKETS & BOLTS KIT	KIT VITERIA E GUARNIZIONI	KIT VISSERIE COLLECTEUR V6 + JOINT	2
9	REC27-99757	27-99757	JUNTA COLECTOR (X1)	MANIFOLD'S GASKET (X1)	GUARNIZIONE (X1)	KIT JOINTS COLLECTEUR ECHAPPEMENT (X1)	2
10	REC53400		KIT JUNTAS CODOS Y TORNILLOS	BOLTS & ELBOWS GASKETS KITS	KIT VITERIA E GUARNIZIONI	KIT VISSERIE POUR COUDE MAR988	2

V6

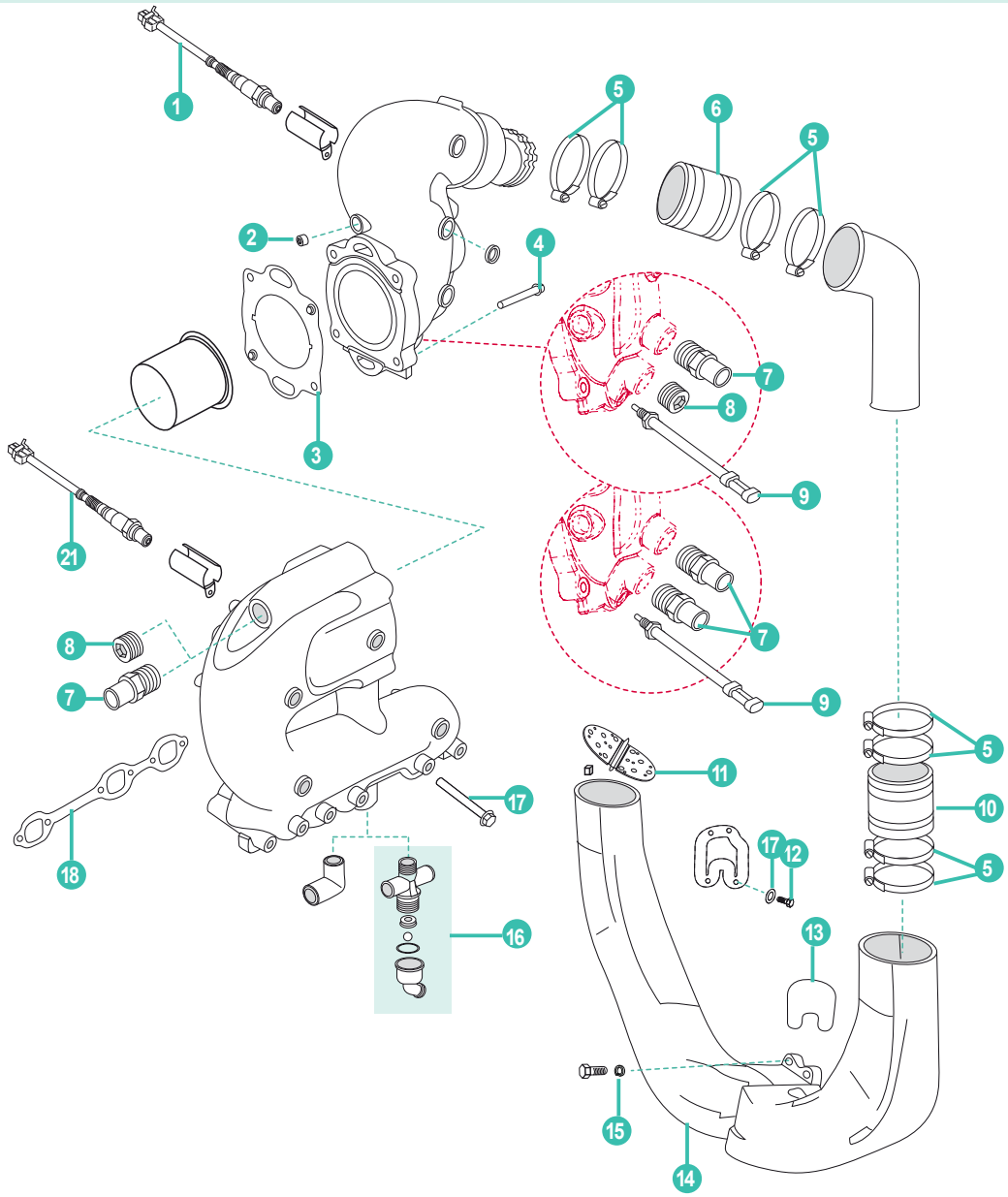

	REF	OEM					UN.
1	REC8M2003959	8M2003959	SENSOR OXÍGENO	OXYGEN SENSOR	SENSORE O2	SENSEUR O2	2
2	REC22-73379	73379	TAPÓN	PLUG	TAPPO	BOUCHON	
3	REC8M2004414	8M2004414	JUNTA (STANDARD COOLING)	GASKET	GUARNIZIONE	JOINT	2
4	REC10-668631	668631	TORNILLO	SCREW	VITE	VIS	4
5	GS38320	815504272	ABRAZADERA	CLAMP	FASCETTA	COLLIER	16
6	REC32-44348001	44348001	TUBO ESCAPE	EXHAUST TUBE	TUBO SCARICO	DURITE D'ÉCHAPPEMENT	2
7	REC22-866725	866725	RACOR COLECTOR	FITTING STRAIGHT	RACCORDO COLLETTORE	RACCORD COLLECTEUR	2 (3)
8	REC22-428611	428611	TAPON CODO LATON	FITTING PIPE. BRASS	TAPPO GOMITO OTTONE	BOUCHON DE COUDE EN LAITON	2
9	REC8M0148668	885342002	SENSOR	SENDER	SENSORE	SENSEUR	2
10	REC32-14358001	14358001	TUBO ESCAPE	EXHAUST TUBE	TUBO SCARICO	DURITE D'ÉCHAPPEMENT	2
11	REC807166A1	807166A1	PALOMILLA	SHUTTER ASSY WATER	FARFALLA	CLAPET	2
12	REC10-98794	98794	TORNILLO	SCREW	VITE	VIS	4
13	REC41802		JUNTA	GASKET	GUARNIZIONE	JOINT	1
14	RM807130A4	8M0115149	CUERNO ESCAPE	PIPE EXHAUST	CORNA DI SCARICO	CORNE D'ÉCHAPPEMENT	1
15	PAGB/T93-10	41471	ARANDELA	LOCKWASHER	RONDELLA	RONDELLE	8
16	REC8M0095953	8M0095953	CONECTOR	FITTING ASSY (STD COOLING)	CONNECTOR	CONNECTEUR	2
17	REC10-53728	8M2000229	TORNILLO	SCREW	VITE	VIS	6
18	REC27-99757	99757	JUNTA	GASKET	GUARNIZIONE	JOINT	1
19	REC8M0142695	8M0095468	SENSOR OXÍGENO	OXYGEN SENSOR	SENSORE O2	SENSEUR O2	2

305, 350, 377, 383, 385, (6.2L)
MAG MPI HORIZON ALPHA/BRAVO

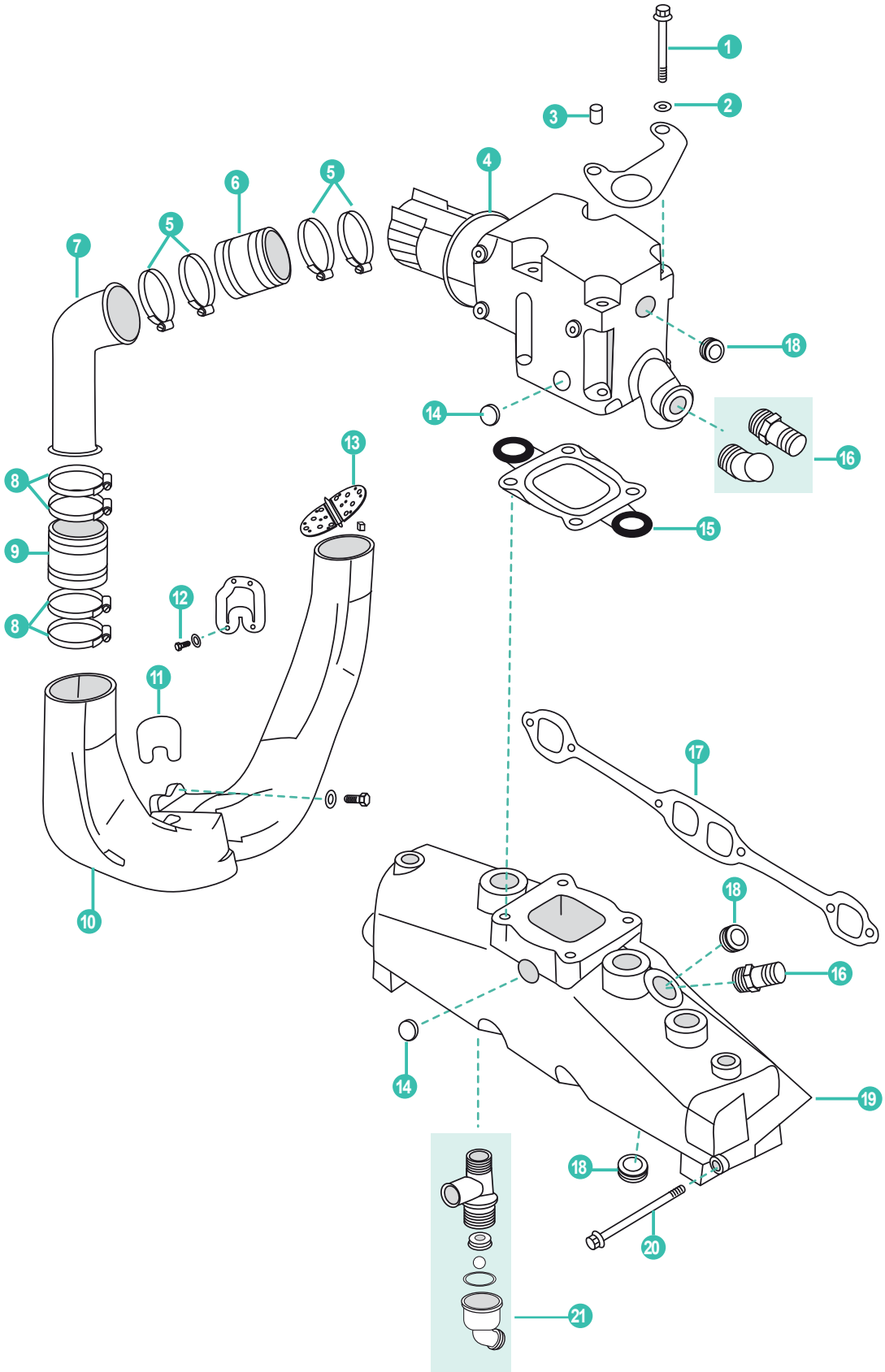

	REF	OEM					UN.
1	REC10-43749	10-43749	TORNILLO	SCREW	VITE	VIS	8
2	REC13-35048	13-35048	ARANDELA	WASHER	RONDELLA	RONDELLE	8
3	REC22-73379	22-73379	TAPÓN	PLUG	TAPPO	BOUCHON	1
4	MAR309	864309T02	CODO BAJO 17 cm	ELBOW LOW 17 cm	GOMITO BASSO 17 cm	COUDE BASSE 17 cm	2
	MAR591	864591T02	CODO ALTO 20,5 cm	ELBOW HIGH 20,5 cm	GOMITO ALTO 20,5 cm	COUDE HAUTE 20,5cm	2
	SED3095400	864309T02	CODO BAJO INOX	ELBOW LOW SS	GOMITO BASSO INOX	COUDE BASSE INOX	2
	SED3095500	864591T02	CODO ALTO INOX	ELBOW HIGH SS	GOMITO ALTO INOX	COUDE HUATE INXO	2
5	GS38310	54-815504456	ABRAZADERA	CLAMP	FASCETTA	COLLIER	8
6	REC32-44348001	32-44348001	FUELLE ESCAPE	EXHAUST BELLOW	MANICOTTO SCARICO	SOUFFLER ÉCHAPPEMENT	2
7	RM14801A1	14801A1	KIT SUPLEMENTOS	KIT RISER	KIT DISTANZIALE	KIT HAUSSEUR	1
8	GS38320	54-815504272	ABRAZADERA	CLAMP	FASCETTA	COLLIER	8
9	REC32-14358001	32-14358001	FUELLE ESCAPE COLECTOR	EXHAUST BELLOW	MANICOTTO SCARICO COLLETTORE	SOUFFLET ÉCHAPPEMENT COLLECTEUR	2
10	RM807130A4	807130A4	CUERNOS DE ESCAPE	EXHAUST PIPE	CORNA DI SCARICO	CORNE D'ÉCHAPPEMENT	1
11	REC41802	41802	RETÉN TRANSOM	TRANSOM GASKET	GUARNIZIONE TRANSOM	JOINT TRANSOM	1
12	REC10-98794	10-98794	TORNILLO	SCREW COVER	VITE	VIS	4
13	REC807166A1	807166A1	PALOMILLA ESCAPE	WATER SHUTTER	FARFALLA SCARICO	CLAPET ÉCHAPPEMENT	2
14	REC19-864689	19-864689	TAPÓN	PLUG	TAPPO	BOUCHON	6
15	REC270		JUNTA CODO - COLECTOR	ELOW-MANIFOLD GASKET	GUARNIZIONE INTERMEDIA	JOINT COUDE - COLLECTEUR	1
16	REC22-866725	22-866725	RACORD COLECTOR	STRAIGHT FITTING	RACCORDO COLLETTORE	RACCORD COLLECTEUR	1
17	REC27-33395	27-33395	JUNTA COLECTOR	MANIFOLD GASKET	GUARNIZIONE COLLETTORE	JOINT COLLECTEUR	2
	FEL17420	27-33395	KIT JUNTAS COLECTOR	MANIFOLD GASKET KIT	KIT GUARNIZIONE COLLETTORE	KIT JOINTS COLLECTEUR	1
18	REC22-428611	22-428611	TAPÓN	PLUG	TAPPO	BOUCHON	4
19	MAR735	865735A02	COLECTOR	MANIFOLD	COLLETTORE	COLLECTEUR	2
20	REC10-53728	10-53728	TORNILLO	SCREW	VITE	VIS	8
21	REC22-863786A1	22-863786A1	CONECTOR	FITTING	CONNECTOR	CONNECTEUR	
22	RECK309		KIT TORNILLOS CODO Y JUNTA	ELBOW GASKET & BOLT KIT	KIT VITERIA GOMITO E GUARNIZIONE	KIT DE MONTAGE	
23	REC270	27-864547A02	KIT JUNTA CODO-COLECTOR	ELBOW-MANIFOLD GASKET	GUARNIZIONE GOMITO-COLLETTORE	JOINT DE COUDE ÉCHAPPEMENT	
24	RECK591		KIT PARA MAR591	KIT FOR MAR591	KIT PER MAR591	KIT POUR MAR591	
25	MAR929 HGE4929	864929A3	KIT RISER 3"	KIT RISER 3"	KIT GOMITO 3"	KIT REHAUSSE 3"	
26	BAMC-20-864908A1	864908A1	KIT RISER 6"	KIT RISER 6"	KIT GOMITO 6"	KIT REHAUSSE 6"	

22

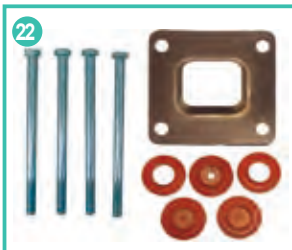

REF
RECK309

23



REF
REC270

24

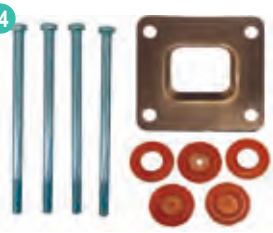

REF
RECK591

25



REF	OEM
MAR292 HGE4929	864929A3

26

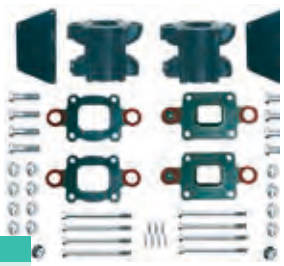

REF
BAMC-20-864908A1

V8 SMALL BLOCK

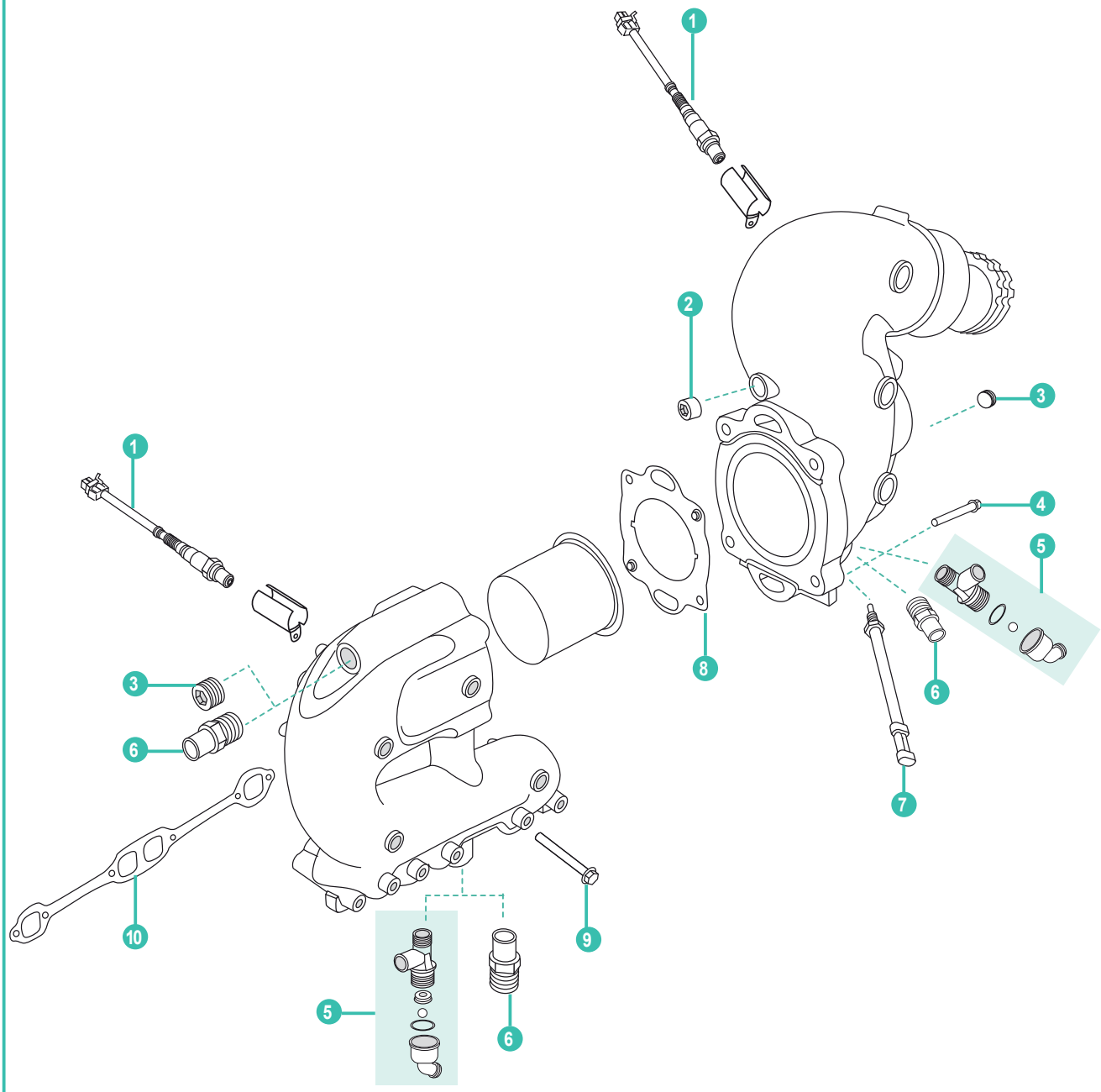

	REF	OEM					UN.
1	REC8M2003959	8M2003959	SENSOR OXÍGENO	O2 SENSOR	SENSORE O2	SENSEUR O2	4
2	REC22-73379	73379	TAPON	PLUG	TAPPO	BOUCHON	
3	REC22-428611	428611	TAPON CODO LATON	FITTING PIPE-BRASS	TAPPO GOMITO OTTONE	BOUCHON DE COUDE EN LAITON	2
4	REC10-668631	668631	TORNILLO	SCREW	VITE	VIS	8
5	REC22-863786A1	863786A1	CONECTOR	T FITTING ASSY	CONNETTORE	CONNECTEUR T	2
6	REC22-866725	866725	RACORD COLECTOR	FITTING STRAIGHT	RACCORDO COLLETTORE	RACCORD COLLECTEUR	2
7	REC8M0148668	885342002	SENSOR	SENSOR ASSY	SENSORE	SENSEUR	2
8	REC8M2004414	8M2004414	JUNTA CODO -COLECTOR	GASKET ELBOW-MAIFOLD	GUARNIZIONE GOMITO - COLLETTORE	JOINT COUDE - COLLECTEUR	2
9	REC10-53728	8M2000229	TORNILLO	SCREW	VITE	VIS	12
10	REC27-33395	8M2000819	JUNTA COLECTOR ESCAPE	MANIFOLD GASKET	GUARNIZIONE COLLETTORE SCARICO	JOINT DE COLLECTEUR D'ECHAPPEMENT	1

198MIE, 228, 228MIE & 898, GM305CID, V8 / 250, 255MIE & 260

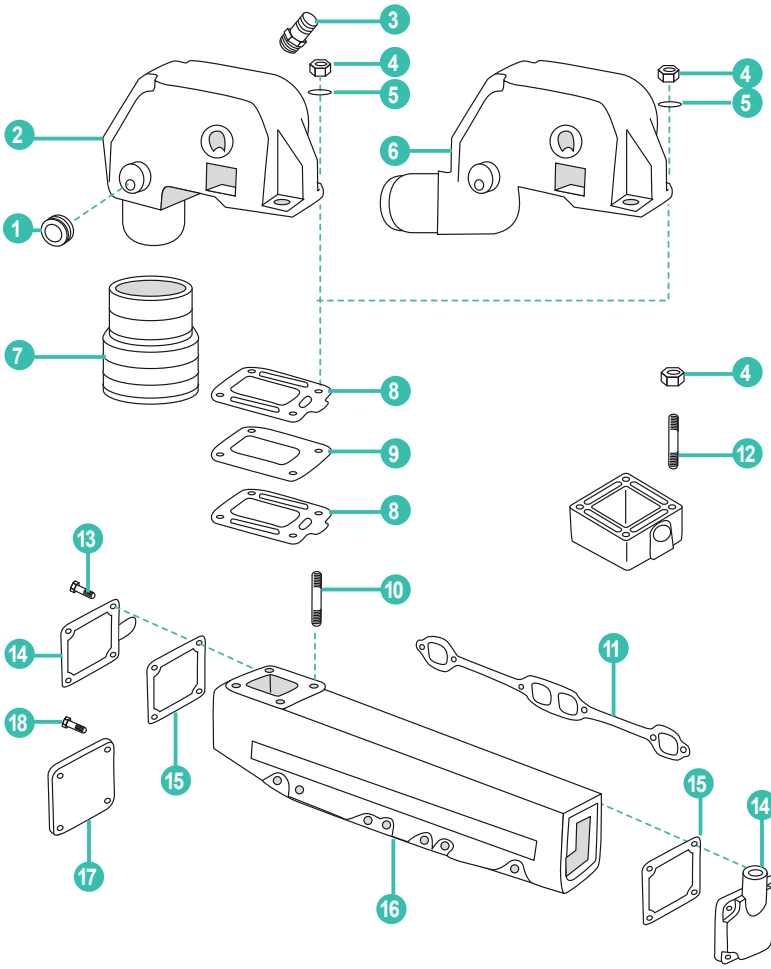

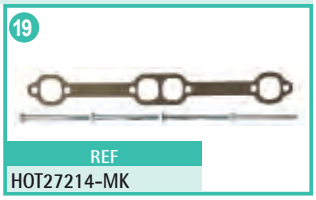

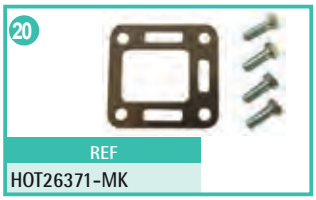

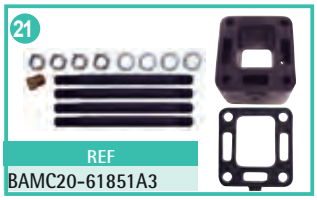

	REF	OEM					UN.
1	REC22-41622	22-41622	TAPON CODO	ELBOW PLUG	TAPPO GOMITO	BOUCHON COUDE	2
2	HOT20971	76351A04	CODO 90º	EXHAUST ELBOW ASSY. 3" 90º	GOMITO 90º	COUDE 90º	1
3	REC22-866725	22-866725	RACORD COLECTOR	STRAIGHT FITTING	RACCORDO COLLETTORE	RACCORD COLLECTEUR	2
4	REC46335	46335	TUERCA CODO	FLANGE SERRATED NUT	DADO	ÉCROU	4
5	REC13-35048	13-35048	ARANDELA	WASHER	RONDELLA	RONDELLE	4
6	HOT20978 REC76771A2	76771A2	CODO 0º	EXHAUST ELBOW ASSY. 3" 0º	GOMITO 0º	COUDE 0º	1
7	REC70981A3	70981A3	FUELLE ESCAPE	EXHAUST BELOW	MANICOTTO SCARICO	SOUFFLET ÉCHAPPEMENT	2
8	REC27-99777Q02	27-99777Q02	JUNTA CODO	GASKET EXHAUST ELBOW	GUARNIZIONE COPERCHIO	JOINT COUDE	2
9	REC60207	60207	TAPA COLECTOR	PLATE	PIASTRA	PLAQUE DE COLLECTEUR	1
10	REC16-49545	16-49545	ESPÁRRAGO	STUD	PRIGIONIERO	GOUJON	4
11	REC27-33395	27-33395	JUNTA COLECTOR	GASKET EXHAUST MANIFOLD	GUARNIZIONE COLLETTORE	JOINT COLLECTEUR	1
	FEL17420	27-33395	KIT JUNTAS COLECTOR	EXHAUST MANIFOLD KIT	KIT GUARNIZIONI COLLETTORE	KIT JOINTS COLLECTEUR	1
12	REC16-97520	16-97520	ESPÁRRAGO	STUD	PRIGIONIERO	GOUJON	4
13	REC10-35386	10-35386	TORNILLO	SCREW END CAP	VITE	VIS	8
14	REC60252A2	60252A2	TAPA COLECTOR	END CAP EXHAUST MANIFOLD	COPERCHIO COLLETTORE	COUVERCLE COLLECTEUR	2
15	REC27-480431	27-480431	JUNTA TAPA	GASKET END CAP	GUARNIZIONE COPERCHIO	JOINT COUVERCLE	2
16	HOT20950	77234A7	COLECTOR BABOR	EXHAUST MANIFOLD PORT	COLLETTORE DI SINISTRA	COLLECTEUR D'ECHAPPEMENT	1
17	HGE4870	73813A1	TAPA COLECTOR	END CAP EXHAUST MANIFOLD	COPERCHIO COLLETTORE	COUVERCLE COLLECTEUR	1
18	RM10-25299	10-824941	TORNILLO	SCREW END CAP	VITE	VIS	4
19	HOT27214-MK		KIT TORNILLOS CODO Y JUNTA	ELBOW GASKET & BOLT KIT	KIT VITERIA GOMITO E GUARNIZIONE	KIT DE MONTAGE ET JOINT	
20	HOT26371-MK		KIT MONTAJE PARA HOT20971/8	MOUNTING KIT ELBOW HOT20971/8	KIT DI MONTAGGIO GOMITO HOT20971/8	KIT MONTAGE POUR HOT20971/8	
21	BAMC20-61851A3		KIT SUPLEMENTOS 3"	RISER 3"	KIT RISER 3"	KIT HAUSSEUR 3"	

200, 228, 230, 230 MIE, 5.0L, 5.0LX, 898, 5.0L MPI, GM305 CID, 260, 260 MIE, 320 EFI, 350 MAG, GM350 CID, 5.7L, 5.7LX, 6.2L MPI V8 (1983 + 2003)

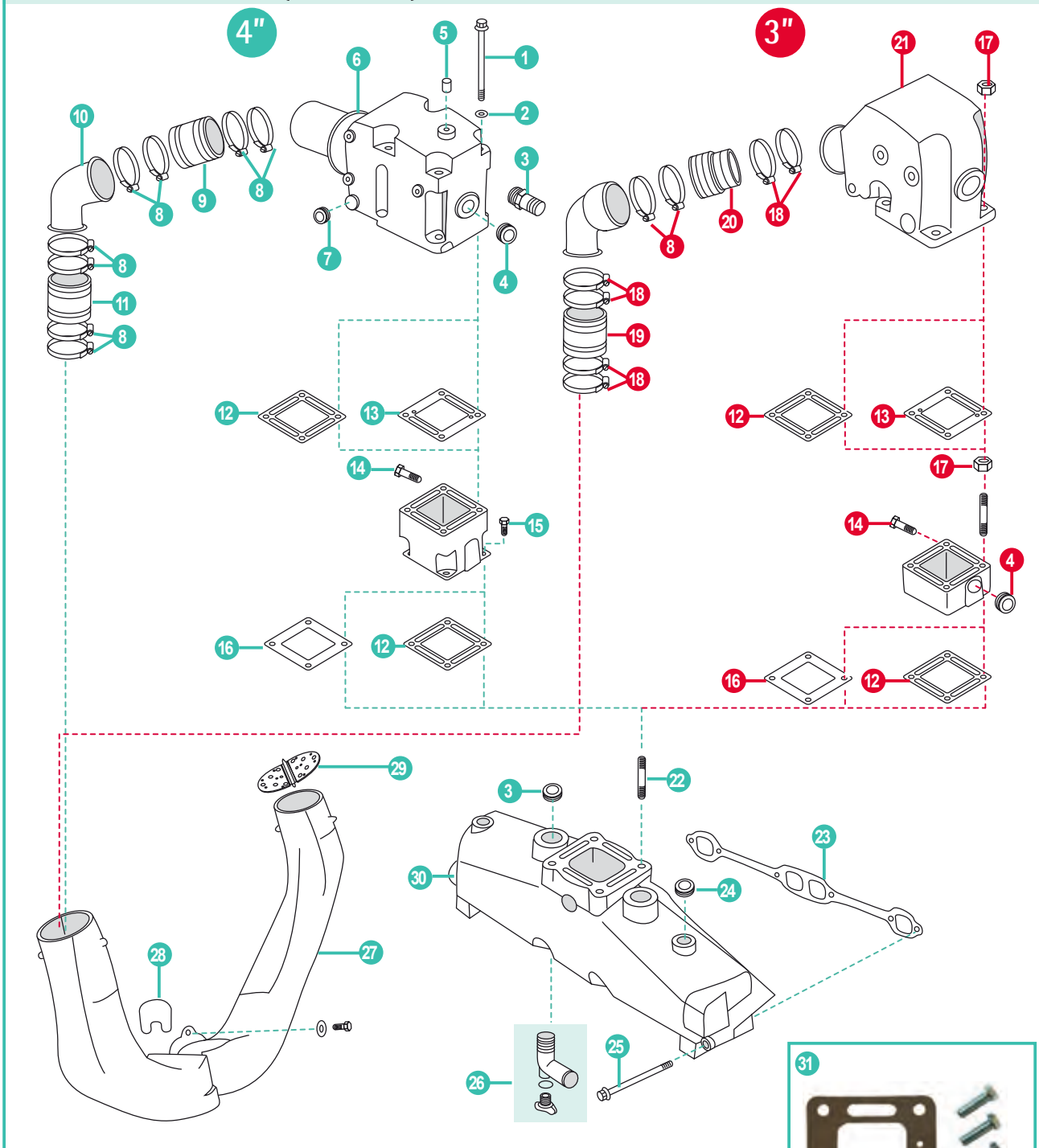

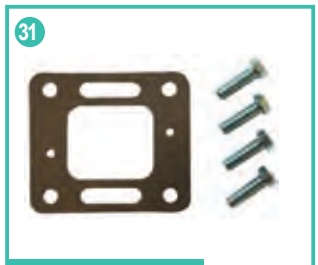

REF
HOT28503-MK

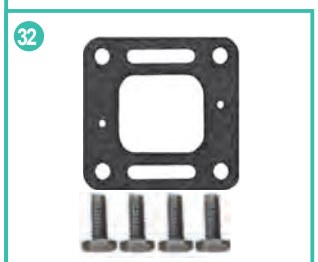

REF
RECK8503

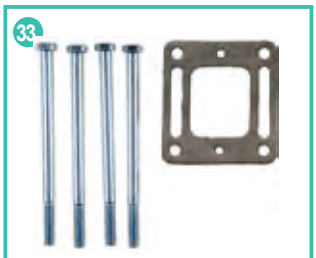

REF
REC53400



REF
HOT20976-MK

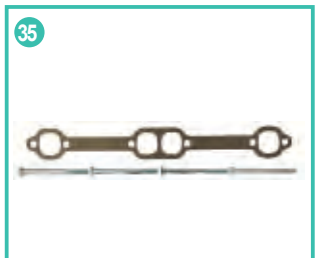

REF
HOT27214-MK

	REF	OEM					UN.
1	REC10-43749	10-43749	TORNILLO ACERO	SCREW STEEL ZINC PLATED	VITE IN ACCIAIO	BOULON DE COUDE EN ACIER	4
2	REC13-35048	13-35048	CIERRE	LOCKWASHER	CHIUSURA	RONDELLE	4
3	REC22-866725	22-866725	RACORD COLECTOR	STRAIGHT FITTING	RACCORDO COLLETTORE	RACCORD COLLECTEUR	2
4	REC22-41622 REC22-428611	22-41622 22-428611	TAPÓN ACERO TAPÓN BRONCE	PLUG (STEEL) PLUG (BRASS)	TAPPO IN ACCIAIO TAPPO IN BRONZO	BOUCHON EN ACIER BOUCHON EN BRONZE	2 2
5	REC22-73379	22-73379	TAPÓN	PLUG	TAPPO	BOUCHON	1
6	MAR988 SED3092600	807988A03	CODO HIERRO CODO INOX	ELBOW (IRON CASTING) 4" 7° ELBOW INOX 4" 7°	GOMITO IN GHISA GOMITO INOX	COUDE FE 4" 7° COUDE INOX 4" 7°	2 2
7	REC22-36382	22-36382	TAPÓN	PLUG	TAPPO	BOUCHON	1
8	GS38322	54-815504372	ABRAZADERA	CLAMP	FASCETTA	COLLIER	1
9	REC32-44348001	32-44348001	FUELLE ESCAPE 4"	EXHAUST BELLOW 4"	CUFFIA SCARICO 4"	SOUFFLET ÉCHAPPEMENT 4"	1
10	BAMC-20-14478 RM14801A1	14478T01 14801A1	TUBO KIT SUPLEMENTOS	TUBE KIR RISER	TUBO KIT DISTANZIALE	TUYAU KIT HAUSSEUR	1 1
11	REC32-14358001	32-14358001	FUELLE ESCAPE 4"	EXHAUST BELLOW 4"	CUFFIA SCARICO 4"	SOUFFLET ÉCHAPPEMENT 4"	1
12	REC27-863726	27-863726	JUNTA COLECTOR Y ESPACIADORES	MANIFOLD AND SPACERS	GUARNIZIONE PER DISTANZIALE GASKET	JOINT COLLECTEUR ET HAUSSEURS	1
13	REC27-863724Q	27-863724Q	JUNTA COLECTOR CIRCUITO CERRADO	GASKET MANIFOLD RAW WATER COOLING	GUARNIZIONE COLLETTORE CIRCUITO APERTO	JOINT DE COUDE D'ECHAPPEMENT	1
14	REC22-328022	22-328022	TAPÓN	CAP	TAPPO	BOUCHON	2
15	REC10-865982005	10-865982005	TORNILLO	SCREW	VITE	VIS	1
16	REC27-8637251	27-8637251	JUNTA COLECTOR CIRCUITO AGUA DULCE	GASKET MANIFOLD FOR FRESH WATER COOLING	GUARNIZIONE COLLETTORE CIRCUITO CHIUSO	JOINT COLLECTEUR EAU FRÎCHE	1
17	REC46335	46335	TUERCA CODO	FLANGE SERRATED NUT	DADO GOMITO	ÉCROU COUDE	4
18	GS38320	54-815504256	ABRAZADERA	CLAMP	FASCETTA	COLLIER	1
19	REC32-90949T	32-90949T	FUELLE ESCAPE 3"	EXHAUST BELLOW 3"	CUFFIA SCARICO 3"	SOUFFLET ÉCHAPPEMENT 3"	1
20	REC70981A3	70981A3	FUELLE ESCAPE 3"	EXHAUST BELLOW 3"	CUFFIA SCARICO 3"	SOUFFLET ÉCHAPPEMENT 3"	1
21	REC98504A3	98504A3	CODO HIERRO 3" 15°	ELBOW (IRON CASTING) 3" 15°	GOMITO IN GHISA 3" 15°	COUDE FE 3" 15°	2
22	REC16-49545	16-49545	TORNILLO	STUD (STEEL)	VITE	VIS	1
23	REC27-33395 FEL17420	27-33395 27-33395	JUNTA COLECTOR KIT JUNTAS	GASKET EXHAUST MANIFOLD GASKET EXHAUST MANIFOLD	GUARNIZIONE COLLETTORE KIT GUARNIZIONI	JOINT COLLECTEUR KIT JOINTS	2 2
24	REC22-384071	22-384071	TAPÓN	PLUG	TAPPO	BOUCHON	1
25	REC10-53728	10-53728	TORNILLO	SCREW	VITE	VIS	4
26	REC862210A01	22-862210A01	KIT TAPÓN Y CONDUCTO	HOSE FITTING WITH DRAIN PLUG KIT	KIT TAPPO	COUDE DRAIN POUR COLLECTEUR	1
27	RM807130A4	807130A4	CUERNOS DE ESCAPE	EXHAUST PIPE	CORNA DI SCARICO	CORNE D'ÉCHAPPEMENT	1
28	REC41802	41802	RETÉN TRANSOM	TRANSOM GASKET	GUARNIZIONE TRANSOM	JOINT TRANSOM	1
29	REC807166A1	807166A1	PALOMILLA ESCAPE	WATER SHUTTER	FARFALLA SCARICO	CLAPET ÉCHAPPEMENT	2
30	MAR246	860246A15	COLECTOR	MANIFOLD	COLLETTORE	COLLECTEUR	2
31	HOT28503-MK		KIT MONTAJE PARA HOT20970	MOUNTING KIT HOT20970	KIT DI MONTAGGIO PER HOT20970	KIT DE MONTAGE POUR HOT20970	
32	RECK8503		KIT TORNILLOS CODO Y JUNTA	EXHAUST ELBOW MOUNTAING KIT	KIT VITI GOMITO	KIT VISSERIE POUR COUDE	
33	REC53400		KIT TORNILLOS CODO Y JUNTA	EXHAUST ELBOW MOUNTAING KIT	KIT VITI GOMITO	KIT VISSERIE POUR COUDE	
34	HOT20976-MK		KIT MONTAJE PARA MAR988	MOUNTING KIT MAR988	KIT DI MONTAGGIO PER MAR988	KIT DE MONTAGE POUR MAR988	
35	HOT27214-MK		KIT PARA MONTAJE PARA /1	MOUNTING KIT /1	KIT DI MONTAGGIO PER /1	KIT DE MONTAGE POUR /1	
36	HOT20985	93322A12AV	KIT RISER 152 mm	KIT RISER 6"	KIT RISER 6"	KIT HAUSSEUR 6"	
37	MAR3320PAR	93320A13	KIT RISER 76 mm	KIT RISER 3"	KIT RISER 3"	KIT HAUSSEUR 3"	
38	REC93320A15	93320A10	KIT RISER 76 mm	KIT RISER 3"	KIT RISER 3"	KIT HAUSSEUR 3"	

36



REF
HOT20985

37

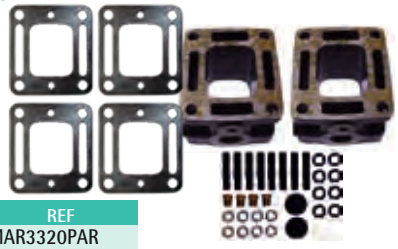

REF
MAR3320PAR

38

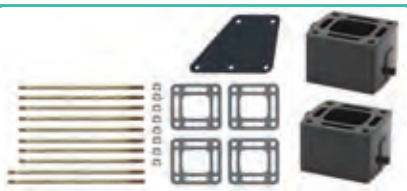

Ajustado para | Fits | Si adatta | Convient à :
2001-02 MCM 4.3L MPI (0M300000-0M614999),
2001-02 MCM V8 (305, 350 & 377 CID) MPI engine (0M300000-0M599999),
2001-02 MIE & Ski V8 (350 & 377 CID) MPI engines (0M300000-0M316999).

Sólo apto para motores con codos de hierro fundido.
Fits only the above engines with cast iron elbows.
Adatto solo per i motori con i gomiti di ghisa.
Ne convient que pour les moteurs équipés de coudes en fonte.

REF
REC93320A15

330, 340MIE, 370TRS, 454EFI, 454MAG, 7.4MIE, 7.4L, 7.4LX, GM454 CID V8
502 EFI, 502 MAG, 8.2L, GM502 CID V8

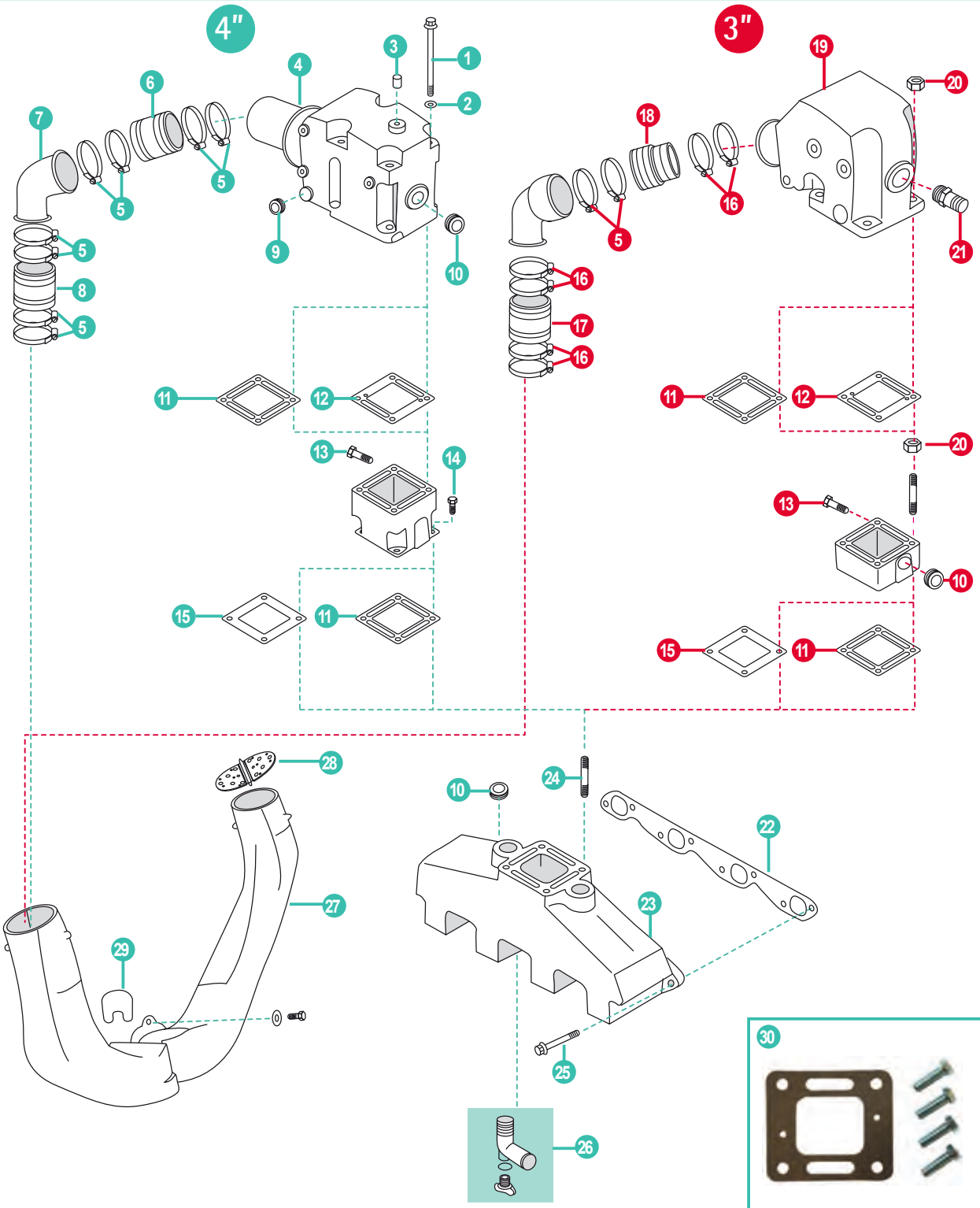

30

REF
HOT28503-MK

31

REF
RECK8503

32

REF
REC53400

33
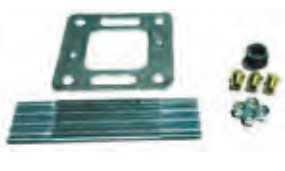
REF
MAR988-MK

34

REF
REC33765

	REF	OEM					UN.
1	REC10-43749	10-43749	TORNILLO	SCREW STEEL ZINC PLATED	VITE	VIS	4
2	REC13-35048	13-35048	CIERRE	LOCKWASHER	CHIUSURA	RONDELLE	4
3	REC22-73379	22-73379	TAPÓN	PLUG	TAPPO	BOUCHON	1
4	MAR988	807988A03	CODO HIERRO 4" 7°	EXHAUST ELBOW (IRON CASTING) 4", 7°	GOMITO IN GHISA 4" 7°	COUDE FE 4" 7°	1
	SED3092600	807988A03	CODO INOX 4" 7°	EXHAUST ELBOW INOX, 4", 7°	GOMITO INOX 4" 7°	COUDE INOX 4" 7°	1
5	GS38322	54-815504372	ABRAZADERA	CLAMP	FASCETTA	COLLIER	10
6	REC32-44348001	32-44348001	FUELLE ESCAPE 4"	EXHAUST BELLOW 4"	CUFFIA SCARICO 4"	SOUFFLET ÉCHAPPEMENT 4"	1
7	BAMC-20-14478	14478T01	TUBO	TUBE	TUBO	TUYAU	1
8	REC32-14358001	32-14358001	FUELLE ESCAPE 4"	EXHAUST BELLOW 4"	CUFFIA SCARICO 4"	SOUFFLET ÉCHAPPEMENT 4"	1
9	REC22-36382	22-36382	TAPÓN	PLUG	TAPPO	BOUCHON	2
10	REC22-41622	22-41622	TAPÓN ACERO	PLUG (STEEL)	TAPPO ACCIAIO	BOUCHON ACIER	2
	REC22-428611	22-428611	TAPÓN BRONCE	PLUG (BRASS)	TAPPO IN BRONZO	BOUCHON BRONZE	2
11	REC27-863726	27-863726	JUNTA	GASKET EXHAUST MANIFOLD AND SPACERS	GUARNIZIONE	JOINT	1
12	REC27-863724Q	27-863724Q	JUNTA CODO ESCAPE	EXHAUST ELBOW GASKET	GUARNIZIONE GOMITO SCARICO	JOINT COUDE ÉCHAPPEMENT	1
13	REC22-328022	22-328022	TAPÓN	PLUG	TAPPO	BOUCHON	2
14	REC10-865982005	10-865982005	TORNILLO	SCREW	VITE	VIS	4
15	REC27-8637251	27-8637251	JUNTA COLECTOR CIRCUITO AGUA DULCE	MANIFOLD FRESH WATER COOLING	GUARNIZIONE COLLETTORE CIRCUTO CHIUSO	JOINT COLLECTEUR EAU FRAÎCHE	1
16	GS38320	54-815504256	ABRAZADERA	CLAMP	FASCETTA	COLLIER	6
17	REC32-90949T	32-90949T	FUELLE ESCAPE 3"	EXHAUST BELLOW 3"	CUFFIA SCARICO 3"	SOUFFLET ÉCHAPPEMENT 3"	1
18	REC70981A3	70981A3	FUELLE ESCAPE 3"	EXHAUST BELLOW 3"	CUFFIA SCARICO 3"	SOUFFLET ÉCHAPPEMENT 3"	1
19	REC98504A3	98504A3	CODO HIERRO 3" 15°	EXHAUST ELBOW (IRON CASTING) 3",15°	GOMITO IN GHISA 3" 15°	COUDE FE 3" 15°	1
20	REC46335	46335	TUERCA	FLANGE SERRATED NUT	DADO	ÉCROU	4
21	REC22-866725	22-866725	RACORD COLECTOR	STRAIGHT FITTING	RACCORDO COLLETTORE	RACCORD COLLECTEUR	2
22	REC27-46820	27-46820	JUNTA COLECTOR	GASKET EXHAUST MANIFOLD	GUARNIZIONE COLLETTORE	JOINT COLLECTEUR	2
23	MAR078	807078T10	COLECTOR HIERRO	EXHAUST MANIFOLD ASSEMBLY (IRON)	COLLETTORE IN GHISA	COLLECTEUR FE	2
24	REC16-49545	16-49545	ESPÁRRAGO 3/8" x 13/4"	STUD 3/8" x 13/4"	PRIGIONIERO 3/8" x 13/4"	GOUJON 3/8" X 1/4"	4
25	REC10-37612	10-37612	TORNILLO	SCREW	VITE	VIS	8
26	REC862210A01	22-862210A01	KIT TAPÓN Y CONDUCTO	HOSE FITTING WITH DRAIN PLUG KIT	KIT RUBINETTO	COUDE DRAIN POUR COLLECTEUR	1
27	RM807130A4	807130A4	CUERNOS DE ESCAPE	EXHAUST PIPE	CORNA DI SCARICO	CORNE D'ÉCHAPPEMENT	1
28	REC807166A1	807166A1	PALOMILLA DE ESCAPE	WATER SHUTTER	FARFALLA SCARICO	CLAPET ÉCHAPPEMENT	2
29	REC41802	41802	RETÉN TRANSOM	TRANSOM GASKET	GUARNIZIONE TRANSOM	JOINT TRANSOM	1
30	HOT28503-MK		KIT MONTAJE PARA HOT20970	MOUNTING KIT HOT20970	KIT DI MONTAGGIO PER HOT20970	KIT DE MONTAGE POUR HOT20970	
31	RECK8503		KIT TORNILLOS CODO Y JUNTA	EXHAUST ELBOW MOUNTAING KIT	KIT VITI GOMITO	KIT VISSERIE POUR COUDE	
32	REC53400		KIT TORNILLOS CODO Y JUNTA	EXHAUST ELBOW MOUNTAING KIT	KIT VITI GOMITO	KIT VISSERIE POUR COUDE	
33	HOT20976-MK		KIT MONTAJE PARA MAR988	MOUNTING KIT MAR988	KIT DI MONTAGGIO PER MAR988	KIT DE MONTAGE POUR MAR988	
34	REC33765		KIT TORNILLOS COLECTOR Y JUNTA	EXHAUST MANIFOLD MOUNTING KIT	KIT VITI COLLETTORE	KIT VISSERIE POUR COLLECTEUR	
35	HOT20985	93322A12AV	KIT RISER 152 mm	KIT RISER 6"	KIT RISER 6"	KIT HAUSSEUR 6"	
36	MAR3320PAR	93320A13	KIT RISER 76 mm	KIT RISER 3"	KIT RISER 3"	KIT HAUSSEUR 3"	
37	HOT20957-MK		KIT MONTAJE MAR078	MOUNTING KIT ELBOW MAR078	KIT DI MONTAGGIO GOMITO MAR078	KIT DE MONTAGE POUR MAR078	

35



REF
HOT20985

36

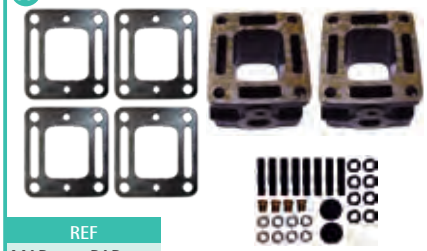

REF
MAR3320PAR

37



REF
HOT20957-MK

325-325MIE, GM427 CID V8
330-330MIE 370TRS - 400TRS - 440TRS - GM454 CID
390 - 390MIE - 460TRS, GM472 CID V8
225 - 225MIE - 250 - 250MIE - GM327CID - 228 - 228MIE
GM305CID - 250 - 270 - 270MIE - 280TRS - GM350 CID V8

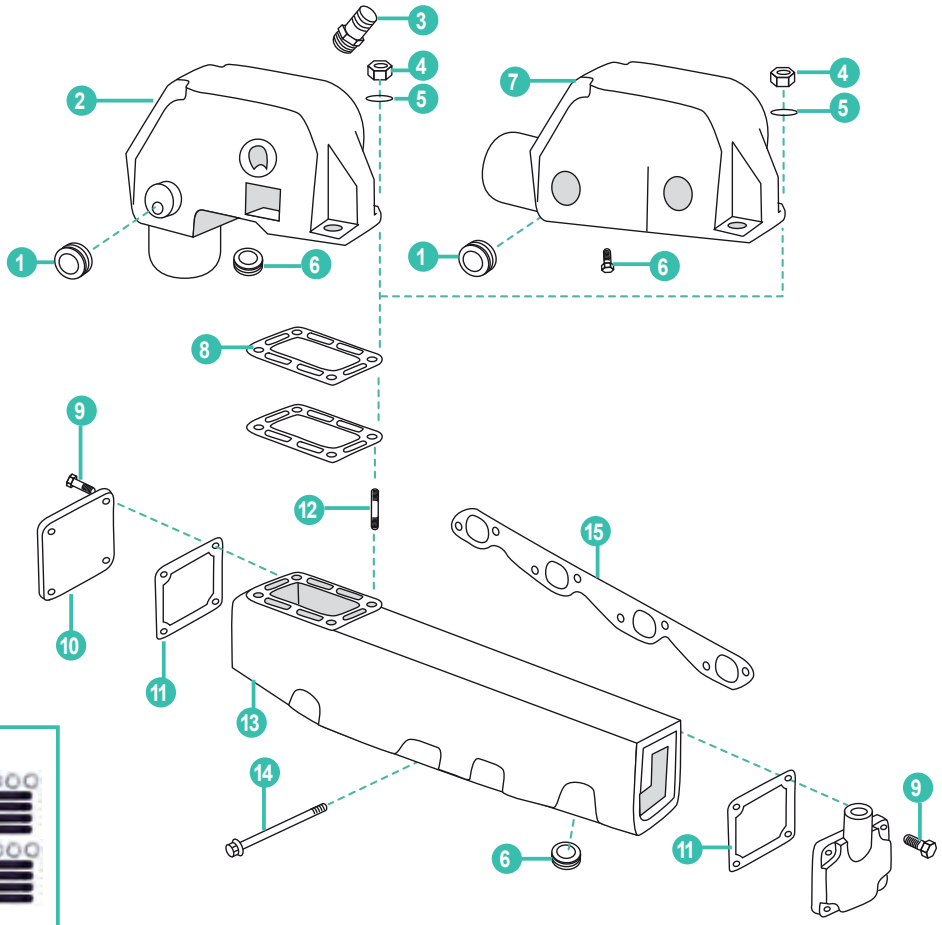

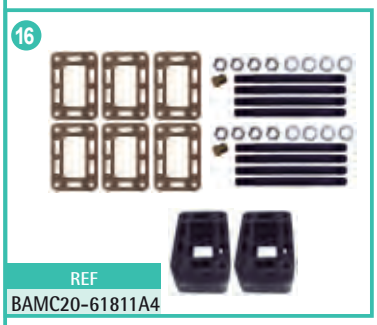

REF
BAMC20-61811A4

	REF	OEM				
1	REC22-41622	22-41622	TAPÓN CODO	ELBOW PLUG	TAPPO SCARICO	BOUCHON COUDE
2	BAMC20-76668	76668A3	CODO ESCAPE	EXHAUST ELBOW	GOMITO SCARICO	COUDE ÉCHAPPEMENT
3	REC22-866725	22-866725	RACORD COLECTOR	STRAIGHT FITTING	TAPPO COLLETTORE	RACCORD COLLECTEUR
4	REC46335	11-46335	TUERCA CODO	NUT	DADO	ÉCROU
5	REC13-35048	13-35048	ARANDELA	WASHER	GUARNAIZIONE	RONDELLE
6	REC22-328022	22-328022	TAPÓN	CAP	TAPPO	BOUCHON
7	BAMC20-72963	72963A9	CODO ESCAPE	EXHAUST ELBOW	GOMITO SCARICO	COUDE ÉCHAPPEMENT
8	REC27-48042	27-48042	JUNTA	GASKET	GUARNIZIONE	JOINT
9	REC10-35386	10-35386	TORNILLO TAPA COLECTOR	SCREW MANIFOLD COVER	VITE COPERCHIO COLLETTORE	VIS COUVERCLE COLLECTEUR
10	HGE4870	73813A1	TAPA COLECTOR	MANIFOLD COVER	COPERCHIO COLLETORE	COUVERCLE COLLECTEUR
11	REC27-480431	27-480431	JUNTA	GASKET	GUARNIZIONE	JOINT
12	REC16-49545	16-49545	TORNILLO CODO COLECTOR	STUD MANIFOLD	VITE GOMITO COLLETTORE	VIS COLLECTEUR
	BAMC1-47735	47735A17	COLECTOR BABOR	PORT MANIFOLD	COLLETTORE DI SINISTRA	COLLECTEUR BABORD
	BAMC1-47736	47736A17	COLECTOR ESTRIBOR	STBD MANIFOLD	COLLETTORE DI DESTRA	COLLECTEUR TRIBORD
13	BAMC1-47737	47737A1	COLECTOR BABOR (225 - 228 - 250 - 270 - 280 - 305 - 327 - 350)	PORT MANIFOLD (225 - 228 - 250 - 270 - 280 - 305 - 327 - 350)	COLLETTORE DI SINISTRA (225 - 228 - 250 - 270 - 280 - 305 - 327 - 350)	COLLECTEUR BABORD (225 - 228 - 250 - 270 - 280 - 305 - 327 - 350)
	BAMC1-47738	47738A1	COLECTOR ESTRIBORD (225 - 228 - 250 - 270 - 280 - 305 - 327 - 350)	STBD MANIFOLD (225 - 228 - 250 - 270 - 280 - 305 - 327 - 350)	COLLETTORE DI DESTRA (225 - 228 - 250 - 270 - 280 - 305 - 327 - 350)	COLLECTEUR TRIBORD (225 - 228 - 250 - 270 - 280 - 305 - 327 - 350)
14	REC10-37612	10-37612	TORNILLO 11/4"	SCREW 11/4"	VITE 11/4"	VIS 11/4"
	REC27-46820	27-46820	KIT JUNTAS COLECTOR	GASKET EXHAUST MANIFOLD	KIT GUARNIZIONI COLLETTORE	KIT JOINTS COLLECTEUR
15	REC27-33395	27-33395	KIT JUNTAS COLECTOR (225 - 228 - 250 - 270 - 280 - 305 - 327 - 350)	GASKET EXHAUST MANIFOLD (225 - 228 - 250 - 270 - 280 - 305 - 327 - 350)	KIT GUARNIZIONI COLLETTORE (225 - 228 - 250 - 270 - 280 - 305 - 327 - 350)	KIT JOINTS COLLECTEUR (225 - 228 - 250 - 270 - 280 - 305 - 327 - 350)
16	BAMC20-61811A4		KIT SUPLEMENTO CODO 76 mm	KIT RISER ELBOW 3"	KIT SUPPLEMENTO GOMITO 3"	KIT REHAUSSE 3"

215, 225, 225MIE, 888 FORD 302 V8 233, 233MIE, 255, 255MIE, FORD 351 V8

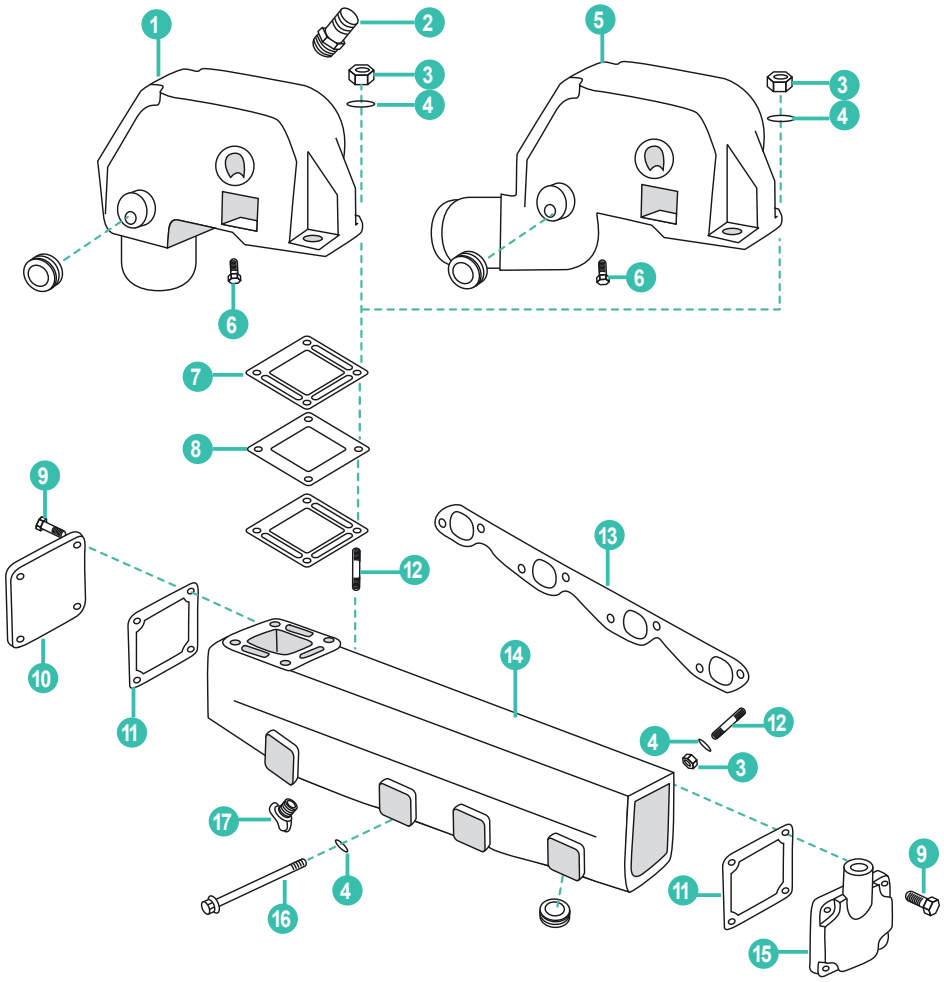

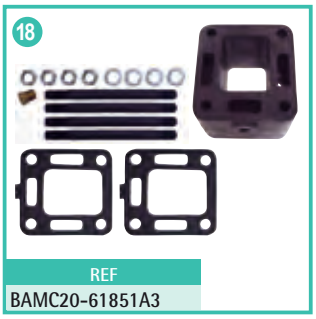





	REF	OEM				
1	HOT20971 HGE6351	76351A04	CODO ESCAPE	EXHAUST ELBOW	GOMITO DI SCARICO	COUDE D'ÉCHAPPEMENT
2	REC22-866725	27-866725	RACORD COLECTOR	STRAIGHT FITTING	RACCORDO COLLETTORE	RACCORD COLLECTEUR
3	REC46335	11-46335	TUERCA CODO	NUT	DADO GOMITO	ÉCROU COUDE
4	REC13-35048	13-35048	ARANDELA	WASHER	RONDELLA	RONDELLE
5	HOT20978	76771A2	CODO ESCAPE	EXHAUST ELBOW	GOMITO DI SCARICO	COUDE D'ÉCHAPPEMENT
6	REC22-328022	22-328022	TAPÓN	CAP	TAPPO	BOUCHON
7	REC27-99777Q02	27-99777Q02	JUNTA	GASKET	GUARNIZIONE	JOINT
8	REC60207	60207	TAPA COLECTOR	MANIFOLD COVER	COPERCHIO COLLETTORE	COUVERCLE COLLECTEUR
9	REC10-35386	10-35386	TORNILLO TAPA COLECTOR	SCREW MANIFOLD COVER	VITE COPERCHIO COLLETTORE	VIS COUVERCLE COLLECTEUR
10	HGE4870	73813A1	TAPA COLECTOR	MANIFOLD COVER	COPERCHIO COLLETTORE	COUVERCLE COLLECTEUR
11	REC27-480431	27-40431	JUNTA	GASKET	GUARNIZIONE	JOINT
12	REC16-49545	16-49545	TORNILLO CODO COLECTOR	STUD MANIFOLD	VITE GOMITO COLLETTORE	VIS COUDE COLLECTEUR
13	REC3852455	27-73866	JUNTA COLECTOR ESCAPE	MANIFOLD GASKET	GUARNIZIONE COLLETTORE SCARICO	JOINT COLLECTEUR ÉCHAPPEMENT
14	HOT20962	65603A12	COLECTOR ESTRIBOR	STBD MANIFOLD	COLLETTORE DI DESTRA	COLLECTEUR TRIBORD
	HOT20958	65604A12	COLECTOR BABOR	PORT MANIFOLD	COLLETTORE DI SINISTRA	COLLECTEUR BABORD
15	REC60252A2	60252A2	TAPA COLECTOR	END CAP ASSY	COPERCHIO COLLETTORE	COUVERCLE COLLECTEUR
16	REC10-37612	10-37612	TORNILLO 11/4"	SCREW 11/4"	VITE 11/4"	VIS 11/4"
17	REC22-866725	27-866725	RACORD COLECTOR	STRAIGHT FITTING	RACCORDO COLLETTORE	RACCORD COLLECTEUR
18	BAMC20-61851A3		KIT SUPLEMENTO 76 mm	KIT RISER ELBOW 3"	KIT SUPPLEMENTO GOMITO 3"	KIT REHAUSSE 3"
19	HOT20560-MK		KIT MONTAJE PARA HOT20962/58	MOUNTING KIT ELBOW HOT20962/58	KIT MONTAGGIO GOMITO HOT20962/58	KIT DE MONTAGE POUR HOT20962/58
20	HOT26371-MK		KIT MONTAJE PARA HOT20978/71	MOUNTING KIT ELBOW HOT20978/71	KIT MONTAGGIO GOMITO HOT20978/71	KIT DE MONTAGE POUR HOT20978/71

COLECTORES MANIFOLDS COLLETTORE COLLECTEURS

REF	OEM	
BAMC-1-63122	63122A10 63122A13 63122A14	120HP GM153



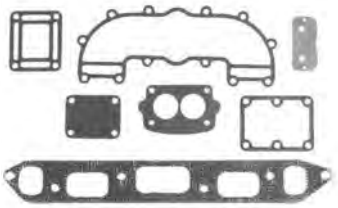

REF		
HOT20937	98562A6	3.7L & 3.7LX 470, 485, 488 (1980-85) 160, 170, 180, 190 3.7L & 3.7LX (1985-89)



HOT20937-MK



REF	OEM	
BAMC-1-95862	95862A5	Se adapta a la mayoría de: Fits most models Si adatta alla maggior parte dei Convient à la plupart des : 2.5L 153 CID 3.0L 181 CID carb. Rochester (1983-89)



REF	OEM	
REC96705A1	96705A1	Se adapta a la mayoría de: Fits most models Si adatta alla maggior parte dei Convient à la plupart des : 3.0L 181 CID carb. Rochester 2.5L, 153 CID (1968-82)



REF	OEM	
HOT20956	99798A18 806867A8 806235A04	Se adapta a la mayoría de: Fits most models Si adatta alla maggior parte dei Convient à la plupart des : 2.5L 153 CID 3.0L 181 CID carb. Mercab & Electric Chore (1983-95)





HOT20956-MK

REF	OEM	
REC860235A03	860235A03 806867A3 806867A12	GM 181 (1990+) 3.0L 0M680000+ 3.0LX &3.0TKS PLUS



REF	OEM	
BAMC-1-58759	58759A1 58759A10 58759A13 58759A14	GM160 & GM165 (6 CYL)



REF	OEM	
MAR746	99746A8 99746A17 99746A3	GM 4.3L & 3.8L V6 175, 185, 205, 229 & 262 (1985-02)





kit HOT20952



kit MAR746

REF	OEM	
MAR612	864612T01	GM4.3L MPI 0M615000+ (2002+) 262



REF	OEM	
MAR735	865735A02 864308T01 865049T01	50L, 5.7L, 6.2L (V8) 305, 350, 377 (2002+)





kit MAR735

REF	OEM	
MAR246	860246A15 87114A19 860246A3 860246A9 860246A10	305, 350 & 377 V8GM (1983-02)





REF	OEM	
MAR078	807078T10 807078T09 807078A6 89011A8	GM V8 BIG BLOCK 330, 340, 370 (454) 7.4L 502 8.2L





BABOR | PORT SINISTRA | BABORD		ESTRIBOR | STD DESTRA | TRIBORD		
REF	OEM	REF	OEM	
HOT20950	77234A7 77234A2		77235A8 77235A2	198, 228, 250, 255, 260, 898, 305CID (GM V8) Bloque pequeño con suplemento Small blocks with end riser Blocco piccolo con supplemento Bloque petit avec supplement



BABOR | PORT SINISTRA | BABORD		ESTRIBOR | STD DESTRA | TRIBORD		
REF	OEM	REF	OEM	
BAMC1-47735	47735A17 47735 47735A1	BAMC1-47736	47736A17 47736	MCM/MIE GM V8 (427, 454 & 482 CID) (-1981)



BABOR | PORT SINISTRA | BABORD		ESTRIBOR | STD DESTRA | TRIBORD		
REF	OEM	REF	OEM	
BAMC1-47737	47737A10 47737A1	BAMC1-47738	47738A10 47738A1	GM SMALL BLOCK V8 (327, 305, 350) 225, 250, 255, 270 & 280 (1977+)



BABOR | PORT SINISTRA | BABORD		ESTRIBOR | STD DESTRA | TRIBORD		
REF	OEM	REF	OEM	
HOT20958	65604A4 65604A12	HOT20962	65603A3 65603A12	FORD V8 SMALL BLOCK (302, 351) 215, 225, 225S, 233, 255 & 288 (-1977)



CODO ELBOW GOMITO COUDE

REF	OEM	
REC76325A2	76325A2	GM 2.5L & 3.0L (1982-89) OLD MODEL (6 CYL INLINE)



REF	OEM	
MAR309	864309T02 864309T01	GM V6 & V8 262, 305, 350, 377, 383 MPI (2002+) 7° (4" O.D. RISER)

CODO BAJO
LOW ELBOW
GOMITO BASSO
COUDE BASSE



REF	OEM	
BAMC-20-55538	55538A2 39920	120 GM 153 (4 CYL) (1964-82) 160 GM 250 (6 CYL INLINE) (1967-69)

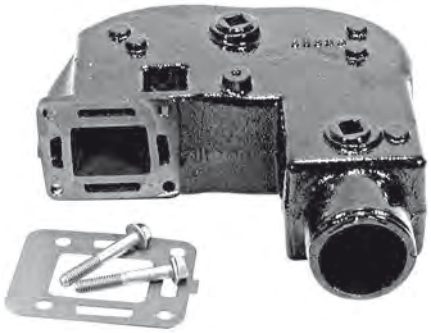

REF	OEM	
MAR591	864591T02	GM V6 & V8 262, 305, 350, 377, 385, 6.2L MPI (2002+) 7° (4" O.D. RISER)

CODO ALTO
HIGH ELBOW
GOMITO ALTO
COUDE HAUTE



REF	OEM	
MAR076	12076A2	GM 2.5L, 3.0 & 3,0LX (1982+) NEW MODEL





REF	OEM	
BAMC20-76668	76668A3 76668A1 72964A1 47877A4	GM (454, 350, 305, 330 V8) 228, 250, 280, 288 Aplic: 3" O.D. RISER



REF	OEM	
MAR988	807988A03 807988A2 807914A1 44354A3	GM V6 & V8 SMALL & BIG BLOCK (1983-02) 7° (4" O.D. RISER)





REF	OEM	
REC76771A2	76771A2 76771A3	V8 GM & FORD 470 (224/L4) GM (6 CYL INLINE) (-1983)



REF	OEM	
REC98504A3	98504A3	GM V6 & V8 SMALL & BIG BLOCK (1983+) 15º (3" O.D. RISER)



REF	OEM	
HOT20971	76351A04 76351A2 60426A1	MCM: 140, 470, 165 & 200 (6 CYL INLINE) GM V8 305,350 FORD V8 302, 351 (-1982)



REF	OEM	
BAMC20-72963	72963A9 72963A1 76788A1 48101A1	GM V8 (454, 427, 482, 327, 350) 225, 250, 270, 325, 390, 330, 350, 370, 400, 440, 460 (1967-86) 3" O.D. RISER



CODO ESCAPE PARA COLECTOR AL — EXHAUST ELBOW FOR MANIFOLD AL — GOMITO DI SCARICO PER COLLETTORE AL — COUDE ÉCHAPPEMENT POUR COLLECTEUR AL

REF	OEM	
HOT20937	98562A6	165, 140, 180, 190 3.7L & 3.7 LX (1985-89)





CODO ESCAPE PARA COLECTOR HIERRO — EXHAUST ELBOW FOR MANIFOLD. IRON — GOMITO DI SCARICO PER COLLETTORE. GHISA — COUDE ÉCHAPPEMENT POUR COLLECTEUR FE

REF	OEM	
HOT20905	90880A2	165, 170, 180, 190 3.7L & 3.7 LX MCM (1980-89)





CODO ESCAPE INOX 316 — 316 SS EXHAUST ELBOW — GOMITO DI SCARICO INOX 316 — COUDE ÉCHAPPEMENT INOX 316

DIESEL

REF	OEM	
SED3093300	805602A2	530DTA, 636, D183, D2.8L, D219, D254, D3.0L, D3.6L, D4.2L



REF	OEM	
SED3093301	80176320	D183T, D219T, D530TA



REF	OEM	
SED3092000	805602A1	2.8L, D254, D3.6L, D4.2L



REF	OEM	
SED3092900	805265A1	DSD /QSD 2.8, 4.2L



CODO ESCAPE INOX 316 — 316 SS EXHAUST ELBOW — GOMITO DI SCARICO INOX 316 — COUDE ÉCHAPPEMENT

GAS

REF	OEM	
SED3092610	12076A2	4 CYL LATE MODELS



REF	OEM	
SED3092600	807988A03	V6 & V-8 7° (4" O.D. RISER)



CODO BAJO
LOW ELBOW
GOMITO BASSO
COUDE BASSE

REF	OEM	
SED3095400	864309T02	GM V6 & V8 262, 305, 350, 377, 383 MPI (2002+) 4" O.D. RISER



CODO ALTO
HIGH ELBOW
GOMITO ALTO
COUDE HAUTE

REF	OEM	
SED3095500	864591T02	GM V6 & V8 262, 305, 350, 377, 385, 6.2L MPI (2002+) 4" O.D. RISER



KIT RISER 3" / 76mm

REF	OEM	COLECTORES MANIFOLDS COLLETTORI COLLECTEURS	
MAR3320PAR	93320A13 807476A6 93320A5	MAR746 MAR246 MAR078 (-2002)	305, 350, 262, 454, 502 (5.0, 5.7, 4.3, 7.4, 8.2) MCM V6 & TBI (2 colectores escape | 2 exhaust manifold | 2 colletore di scarico | 2 colleteurs échappement) (-0M614999) MCM/MIE/SKI V8 (305, 350, 377, 354 & 502 CID) (Codo de hierro | cast iron elbow | gomito in ghisa | coude) (-0M299999) MCM V8 (305 & 350 CID) Carb. (0M300000-0M599999) MIE & SKI Carb. (0M300000-0M316999)

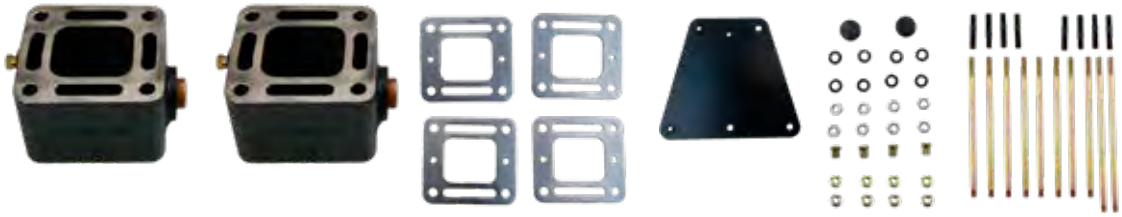

REF	OEM	COLECTORES MANIFOLDS COLLETTORI COLLECTEURS	
REC93320A15	93320A15 93320A10	MAR746 MAR246 MAR078 (-2002)	MCM 4.3L MPI (0M3000000-0M614999) (2001-02) MCM V8 (305, 350, 377 CID) MPI (0M300000-0M599999) (2001-02) MIE & SKI V8 (350 & 377 CID) MPI (0M300000-0M316999) (2001-02) (sólo codos de hierro | Only with cast iron elbows | Solo gomiti in ghisa | seulement coudes en Fe)

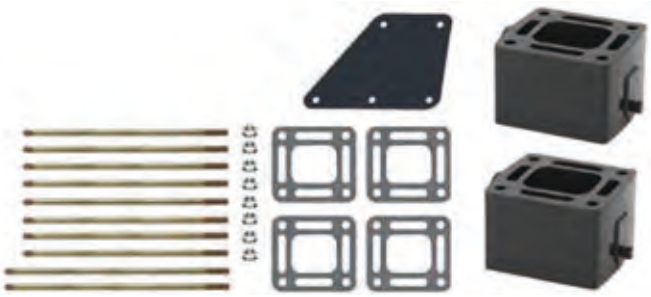

REF	OEM	COLECTORES MANIFOLDS COLLETTORI COLLECTEURS	
MAR929 HGE4929	864929A3	MAR612	350, 357, 377, 383, 385 (MAG, MPI) GM V6&V8 (4.3, 5.0, 5.7, 6.2) (2002+)



REF	OEM	COLECTORES MANIFOLDS COLLETTORI COLLECTEURS	
BAMC20-61811A4	61811A4 61811A3	BAMC1-47736 BAMC1-47737 BAMC1-47738 BAMC1-47735	GM V8 (427, 454 & 582 CID) 327, 305, 350 225, 250, 255, 270 & 280 (1977+) BASE RECTANGULAR RECTANGULAR BASE BASE RETTANGOLARE BASE RECTANGULAIRE

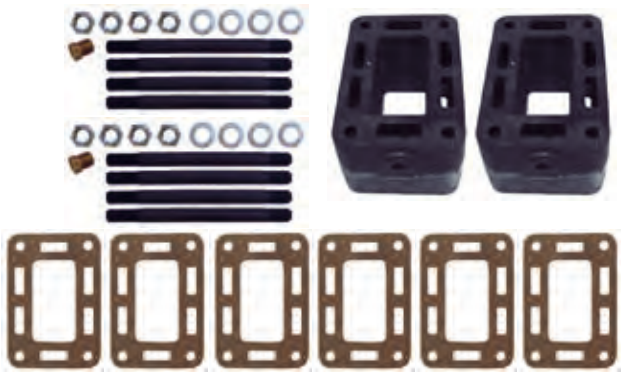

REF	OEM	COLECTORES MANIFOLDS COLLETTORI COLLECTEURS	
BAMC20-61851A3	61851A3	REC96705A1 HOT20956 BAMC-1-58759	140 HP (181 4cyl), 120 (2.5L), 153 GM 160, 165 (6 cyl inline)

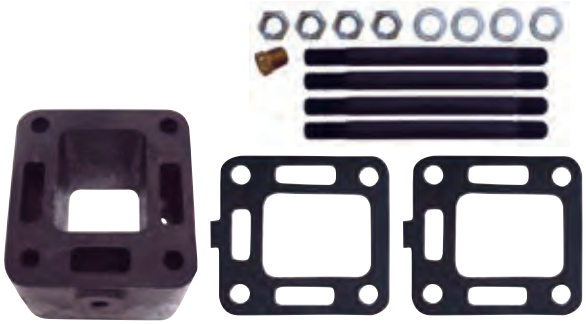

KIT RISER 6" / 152mm

REF	OEM	COLECTORES MANIFOLDS COLLETTORI COLLECTEURS	
HOT20985	93322A12	MAR746 MAR246 MAR078 (-2002)	MCM V6 & TBI (2 colectores | 2 manifold | 2 colletore | 2 collecteurs) (-0M614999) MCM/MIE/SKI V8 (305, 350, 377, 354 & 502 CID) (Fe) (-0M299999) MCM V8 (305 & 350 CID) Carb. (0M300000-0M599999) MIE & SKI Carb. (0M300000-0M316999)



REF	OEM	COLECTORES MANIFOLDS COLLETTORI COLLECTEURS	
BAMC-20-864908A1	864908A1	MAR612	350, 357, 377, 383, 385 (MAG, MPI) GM V6&V8 (4.3, 5.0, 5.7, 6.2) (2002+)

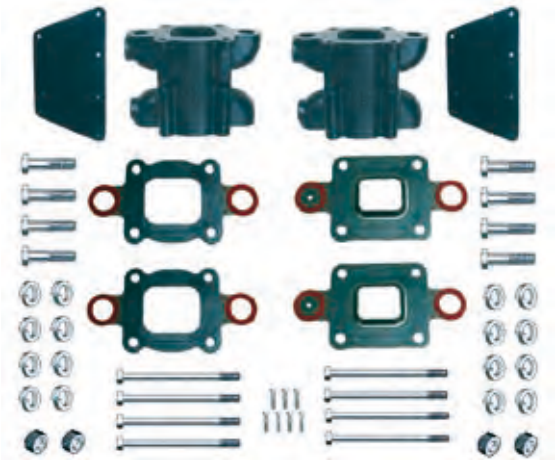

TAPONES / CAPS / TAPPI / BOUCHONS

REF	ROSCA
REC22-428611	3/4 - 14NPT
REC22-328022	1/8 - 27 NPT
REC22-32803	3/8 - 18 NPT
REC22-36382	1/4 - 18 NPT
REC22-41622	3/4 - 14 NPT
REC13980	
REC22-73379	.250-18



EXTENSORES DE ESCAPE / EXHAUST EXTENSIONS / ESTENSIONI DI SCARICO / PROLONGATEURS D'ÉCHAPPEMENT

REF	OEM	Ø	
BAMC-20-14478	14478T01 14478T	4"	175, 205, 229, 262 (V6) (1983-05) 200, 320, 305, 350, 377 (V8) (1993+) 330, 370, 454, 502 (V8 BIG BLOCK) (1981+)



REF	OEM	
RM14801A1	14801A1	5.0, 5.7, 6.2L V8 (1998+) INSTALAR EN MODELOS CON KITS DE RISER DE 3" & 6" INSTALL IN MODELS WITH 3" & 6" RISER KITS INSTALLARE NEI KIT DEI RISER DA 3" e 6" À INSTALLER SUR LES MODÈLES AVEC KITSDE 3" ET 6".



REF	OEM	
RM807130A4	807130A4 8M0115149 44266T 44266T1	"Y" PIPE V6 & V8, Alpha, Bravo 4.3, 5.0, 5.7, 6.2, 7.4, 8.2L GM 4.5L MPI 7° 4" Codos | Elbows | Gomiti | Coudes

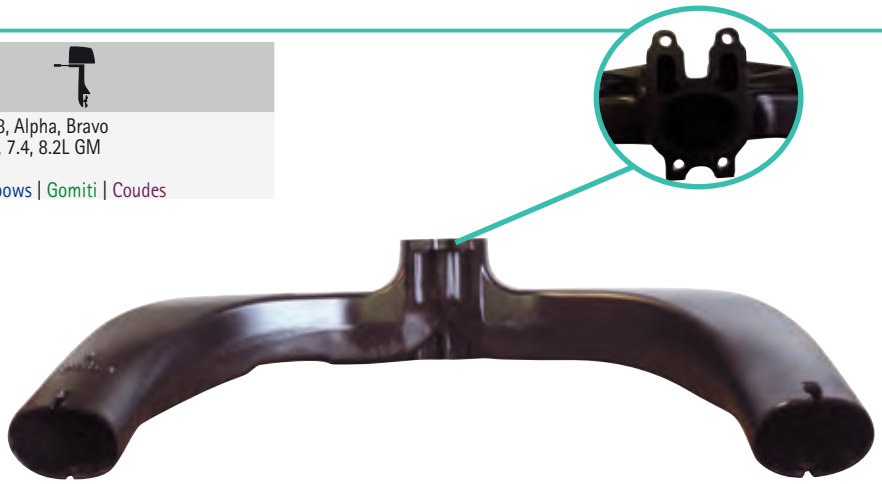

TAPAS Y JUNTAS | CAPS & GASKETS | COPERCHI E GUARNIZIONE | COUVERCLES ET JOINTS

TAPA DE COLECTOR | END CAP MANIFOLD | COPERCHIO COLLETTORE | COUVERCLE COLLECTEUR

REF	OEM	COLECTORES MANIFOLDS COLLETTORI COLLECTEURS
BA1-47638	47638A1	BAMC-1-63122



REF	OEM	COLECTORES MANIFOLDS COLLETTORI COLLECTEURS
HGE4870	73813A1	BAMC1-47735 BAMC1-47736 BAMC1-47737 BAMC1-47738 REC96705A1 BAMC-1-95862 HOT20956 BAMC-1-58759



REF	OEM	COLECTORES MANIFOLDS COLLETTORI COLLECTEURS
REC60252A2	60252A2	REC96705A1 BAMC-1-58759 HOT20950 BAMC1-47735 BAMC1-47736 BAMC1-47737 BAMC1-47738 HOT20962 HOT20958



REF	OEM	COLECTORES MANIFOLDS COLLETTORI COLLECTEURS
REC805629A1	805629A1	BAMC-1-95862 HOT20956



JUNTAS TAPAS LATERALES | SIDE GASKET CAPS | GUARNIZIONE COPERCHIO LATERALE | JOINTS COUVERCLE LATERAL

REF	OEM	TAPAS CAPS COPERCHIO COUVERCLE
REC27-39917	27-39917	BA1-47638

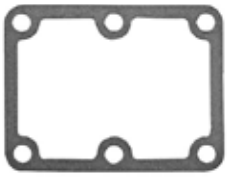

REF	OEM	TAPAS CAPS COPERCHIO COUVERCLE
REC27-807218	27-807218	HGE4870 REC805629A1



REF	OEM	TAPAS CAPS COPERCHIO COUVERCLE
BAMC47-27-39923	27-39923	39916

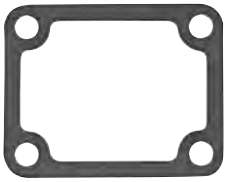

REF	OEM	TAPAS CAPS COPERCHIO COUVERCLE
REC27-480431	27-480431	REC60252A2



JUNTAS TAPA POSTERIOR INTERCAMBIADOR — HEAT EXCHANGER END CAP — COPERCHIO POSTERIORE SCAMBIATORE — JOINTS DU COUVERCLE ARRIERE DE L'ÉCHANGEUR

REF	OEM	
REC27-99960	27-99960	224 CID (1976-89)



JUNTAS COLECTOR-CODO — MANIFOLD-ELBOW GASKET — GUARNIZIONE COLLETTORE-GOMITO — JOINTS COLLECTEUR - COUDE

REF	OEM	CODOS ELBOWS GOMITI COUDES
REC27-39915	27-39915	BAMC-20-55538

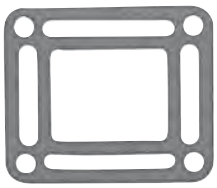

REF	OEM	CODOS ELBOWS GOMITI COUDES
REC27-99777Q02	27-99777Q02 27-997771 27-997772	HOT20971 REC76771A2 MAR076 REC76325A2



REF	OEM	CODOS ELBOWS GOMITI COUDES
REC27-18272	27-18272	HOT20937 AL



REF	OEM	CODOS ELBOWS GOMITI COUDES
REC27-856705	27-856705 27-97542	HOT20905 FE



REF	OEM	CODOS ELBOWS GOMITI COUDES
REC27-8637251	27-8637251 860231 863725	MAR988 REC98504A3



REF	OEM	CODOS ELBOWS GOMITI COUDES
REC27-48042	27-48042	BAMC20-76668 BAMC20-72963



REF	OEM	CODOS ELBOWS GOMITI COUDES
REC27-863724Q	27-863724Q 27-41813 27-860233 27-863724	MAR988 REC98504A3



REF	OEM	CODOS ELBOWS GOMITI COUDES
REC270	27-864547A02 27-864550A02 27-864549A02	MAR309 MAR591



REF	OEM	CODOS ELBOWS GOMITI COUDES
REC27-863726	27-863726 27-871051 27-818832 27-860232	MAR988 REC98504A3



new

REF	OEM	CODOS ELBOWS GOMITI COUDES
REC8M2004414	8M2004414	STANDARD COOLING V6 & V8 NEW MODELS



new

REF	OEM
RM27-864549A02	27-864549A02

1 CLOSED COOLING



new

REF	OEM
REC27-864547A02	27-864547A02

2 OPEN COOLING



new

REF	OEM
REC27-864850A02	27-864850A02

3 RESTRICTOR COOLING



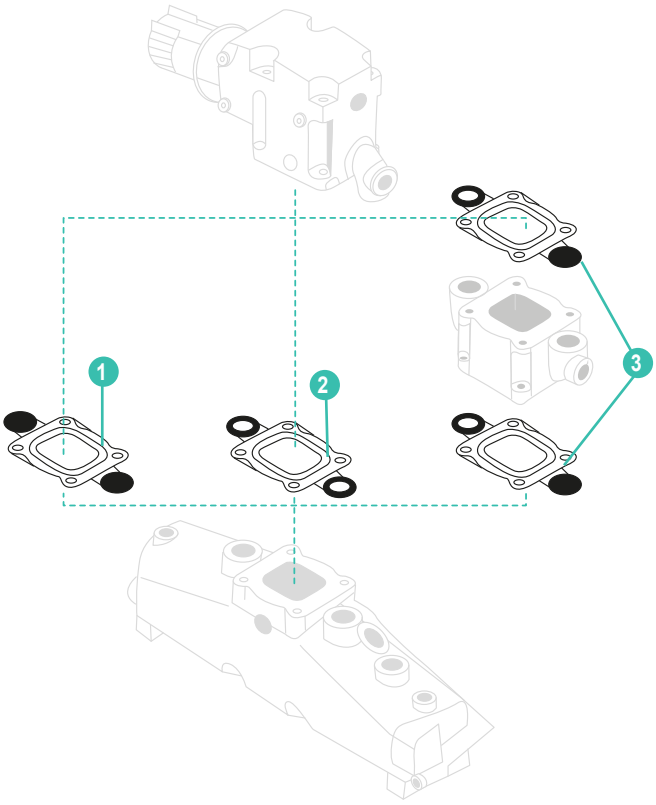

JUNTAS COLECTOR-CULATA · MANIFOLD-HEAD GASKET · GUARNIZIONE COLLETTORE-TESTATA · JOINTS COLLECTEUR-CULASSE

REF	OEM		
REC27-68715	27-68715	MCM 3.7L (4 cyl)	



REF	OEM	COLECTORES MANIFOLDS COLLETTORI COLLECTEURS	
REC27-52546	27-52546	BAMC-1-63122	GM 153 (4 cyl)



REF	OEM	COLECTORES MANIFOLDS COLLETTORI COLLECTEURS	
REC27-53354	27-53354	REC96705A1	GM 181 (4 cyl)



REF	OEM	COLECTORES MANIFOLDS COLLETTORI COLLECTEURS	
REC27-815528	27-815528	REC860235A03	GM 181 (4 cyl)



REF	OEM	COLECTORES MANIFOLDS COLLETTORI COLLECTEURS	
FEL17319	27-46401	BAMC-1-58759	GM 250 (6 cyl Inline)



REF	OEM	COLECTORES MANIFOLDS COLLETTORI COLLECTEURS		
REC27-99757	27-99757	MAR746 MAR612	GM V6	1



REF	OEM	COLECTORES MANIFOLDS COLLETTORI COLLECTEURS	
REC27-96429	27-96429	BAMC-1-95862 HOT20956	GM 153 & 181 (4 cyl)



REF	OEM	COLECTORES MANIFOLDS COLLETTORI COLLECTEURS		
REC27-33395	27-33395	HOT20950 MAR246	GM V8 SMALL BLOCK	1
FEL17420				2



REF	OEM	COLECTORES MANIFOLDS COLLETTORI COLLECTEURS		
REC27-46820	27-46820	MAR078 BAMC1-47735 BAMC1-47736	GM V8 BIG BLOCK	1



REF	OEM	COLECTORES MANIFOLDS COLLETTORI COLLECTEURS		
REC3852455	27-73866	HOT20958 HOT20962	FORD V8 (302, 351)	1
FEL17460				2



FUELLES DE ESCAPE — EXHAUST BELLOW — CUFFIA DI SCARICO — SOUFFLET D'ÉCHAPPEMENT

REF	OEM	
REC53114A1	53114A1 53114	120, 140, 160, 165 (GM 181 & 250) (1967-82)
CEF500524		



REF	OEM	Ø IN.
REC32-44348001	32-44348001 32-44348T 32-44348	4" (101 mm) Tubo superior Upper tubo Tubo superiore Tube supérieur
CEF500507K		



REF	OEM	Ø IN.
REC70981A3	70981A3	3" - 4" (76 - 101 mm)
CEF500523		



REF	OEM	Ø IN.
REC32-14358001	32-14358001 32-14358T 32-14358	4" (101 mm) Tubo inferior Lower tubo Tubo inferiore Tube inférieur
CEF500508K		



REF	OEM	Ø IN.
REC32-90949T	32-90949T	3" (76 mm)
CEF500511K		



REF	OEM	Ø IN.	
REC32-807458T	32-807458T	4" (101 mm)	4.3L (1996+)
CEF500532K			



PALOMILLAS DE ESCAPE — WATER SHUTTER — FARFALLA DI SCARICO — CLAPET D'ÉCHAPPEMENT

REF	OEM	Ø	
REC99370A2	99370A2	3" (76 mm)	V6-V8 (1982-87)



REF	OEM	Ø		
REC807166A3	807166A3 14348A1	4" (101 mm)	V6-V8 (1992-95) D3.0, D3.6, D4.2L	2



REF	OEM	Ø	
REC807166A1	807166A1	4" (101 mm)	V6-V8 (1992+) 4.5L MPI



REF	OEM	
REC60930	60930	4 cyl 140 / 3.0L / 3.0LX V8 TDI 4.2L (335, 370 MCM/MIE)



PROTECTORES SALIDA DE ESCAPE | EXHAUST PROTECTOR VALVES | PROTEZIONE SCARICO | PROTECTEURS DE SORTIE D'ÉCHAPPEMENT

REF	OEM	
REC34765A2	34765A2	76 mm = 3"
REC12644A1	12644A1	101 mm = 4"
REC89260		127 mm = 5" 152 mm = 6"


REC34765A2


REC12644A1


REC89260

COLECTOR ADMISIÓN | INTAKE MANIFOLD | COLLETTORE ASPIRAZIONE | COLLECTEURS ADMISSION

TAPA DE COLECTOR | END CAP MANIFOLD | COPERCHIO COLLETTORE | COUVERCLE COLLECTEUR

REF	OEM			
MP425036	824330 824330T	8	GM 262, 4.3 (V6) VORTEC (4 bbl) FE (1993+)	REC824326002



REF	OEM			
MP425024	824324T 824324	8	GM 262, 4.3 (V6) VORTEC (2 bbl) FE (1993+)	REC824326002



REF	OEM			
REC425062	807289A1	8	M V8 (350, 5.7) VORTEC (4 bbl) (1993+)	REC27-807473A1



REF	OEM			
MP425113	811575 811575T 59974	16	GM V8 BIG BLOCK 427 & 454 (1969-97) GEN IV, V, VI (4 bbl)	REC17340



REF	OEM			
MP425149	72608 72608T	16	GM 454, 482, 502 (1978-97)	REC17341



UNIDADES DE TRANSMISIÓN
TRANSMISSION UNIT
UNITÀ DI TRASMISSIONE
EMBASES ET PIÈCES

BRAVO I, II, III

PARTE SUPERIOR — DRIVE SHAFT HOUSING — PARTE SUPERIORE — PARTIE SUPÉRIEURE

OEM	2	REDUCCIÓN RATIO RIDUZIONE RÉDUCTION	⚙	SERIAL
1589-865440H52	REC1589-865440H52	BRAVO 1 1.65 BRAVO 2 2.20 BRAVO 3 2.20 & 2.43	30/23	
1589-865440H51	REC1589-865440H51	BRAVO 1 1.50 BRAVO 2 1.65 &2.00 BRAVO 3 1.5, 1.65 & 2.00	32/27	0W250000 +
1589-865440H50	REC1589-865440H50	BRAVO 1 1.36 BRAVO 2 1.81 BRAVO 3 1.36 & 1.81	29/27	



PARTE INFERIOR — COMPLETE GEAR HOUSING ASSEMBLY — PARTE INFERIORE — PARTIE INFÉRIEURE

	OEM	1	REDUCCIÓN RATIO RIDUZIONE RÉDUCTION	ENTRADAS DE AGUA WATER INTAKE PRESA D'ACQUA INLETS D'EAU	SERIAL
BRAVO I	1656-8866A55	REC1656-8866A55	ALL	1	
	1656-8866A63	REC1656-8866A63	ALL	2	
BRAVO III	1656-8M0046733	REC1656-8M0046733	1.36 & 1.5		0D784124+ & X
	1656-8M0046735	REC1656-8M0046735	1.65		0D784124+ & X, XR 0W240000+
	1656-8M0046738	REC1656-8M0046738	1.81, 2.00 & 2.20		0W240000+
	1656-8M0046682	REC1656-8M0046682	2.43		0D784124+ & X

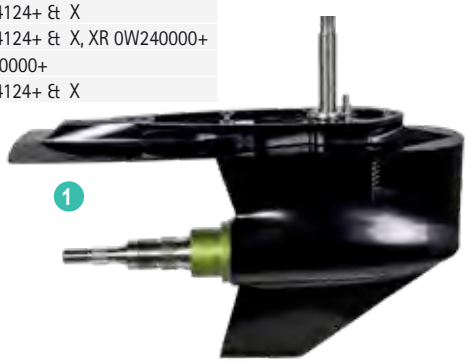

COLA COMPLETA — COMPLETE DRIVE SHAFT — PIEDE COMPLETO — EMBASE COMPLÉT

	OEM		REDUCCIÓN RATIO RIDUZIONE RÉDUCTION	ENTRADAS DE AGUA WATER INTAKE PRESA D'ACQUA INLETS D'EAU	SERIAL
BRAVO I	5-5231100NP	REC1589-865440H50 REC1656-8866A55	1.36	1	0M0100001 - 0W249999
	5-5231200NP	REC1589-865440H51 REC1656-8866A55	1.50	1	0M0100001 - 0W249999
	5-5231300NP	REC1589-865440H50 REC1656-8866A55	1.65	1	0M0100001 - 0W249999
	5-5231100TP	REC1589-865440H50 REC1656-8866A63	1.36	2	0W250000 +
	5-5231200TP	REC1589-865440H51 REC1656-8866A63	1.50	2	0W250000 +
	5-5121300TP	REC1589-865440H52 REC1656-8866A63	1.65	2	0W250000 +
BRAVO III	5-5441100TP	REC1589-865440H50 REC1656-8M0046733	1.36		0W250000 +
	5-5441200TP	REC1589-865440H51 REC1656-8M0046733	1.50		0W250000 +
	5-5441300TP	REC1589-865440H51 REC1656-8M0046735	1.65		0W250000 +
	5-5441400TP	REC1589-865440H50 REC1656-8M0046738	1.81		0W250000 +
	5-5441600TP	REC1589-865440H51 REC1656-8M0046738	2.0		0W250000 +
	5-5441500TP	REC1589-865440H52 REC1656-8M0046738	2.20		0W250000 +
	5-5441700TP	REC1589-865440H52 REC1656-8M0046682	2.43		0W250000 +



R / MR / ALPHA ONE

COLA COMPLETA — COMPLETE DRIVE SHAFT — PIEDE COMPLETO — EMBASE COMPLÉT

STD ROT. (13/21 THEETH 1972-92) OEM	1	CONTRAROTACIÓN / COUNTER ROTATION / CONTRO-ROTAZIONE / CONTRE-ROTATION OEM	1	2	REDUCCIÓN / RATIO / RIDUZIONE / RÉDUCTION	
5-5010147CP	REC1623-8951A43	5-5000147CP	REC1623-8951A33	REC1547-9412A20	1.47, 1.50 (20/22)	V8 (-300HP)
5-5010162CP		5-5000162CP		REC1547-9412A21	1.62, 1.65 (24/24)	6 Cyl in-line
5-5010181CP		5-5000181CP		REC1547-9412A22	1.81, 1.84 (17/19)	V6 & 470/485
5-5010194CP		5-5000194CP		REC1547-9412A23	1.94, 1.98 (20/24)	4 Cyl in-line

Se suministra en dos piezas sin tornillos de unión ni ánodos. Para una instalación completa pida las siguientes referencias:

Supplied in 2 pieces without union screws nor anodes. For a complete installation ask for the following references:

Fornito in due pezzi senza viti di unione e senza anodi. Per un'installazione completa richiedere i seguenti riferimenti:

Livré en deux pièces sans vis de connexion et sans anodes. Pour une installation complète, veuillez demander les références suivantes :

REF					UN.
REC10-30206	TORNILLO	SCREW	VITE	VIS	1
REC11-34933	TUERCA	NUT	DADO	ÉCROU	5
CMALPHAGEN1KITA	KIT ANODOS	ANODES KIT	KIT ANODI	KIT ANODES	1



PARTE SUPERIOR COMPLETA — COMPLETE DRIVE SHAFT HOUSING — PARTE SUPERIORE COMPLETO — PARTIE SUPÉRIEURE COMPLETE

2	OEM	REDUCCIÓN / RATIO / RIDUZIONE / RÉDUCTION	
REC1547-9412A20	1547-9412A20	1.47, 1.50 (20/22)	V8 (-300 HP) 9-9/16" new style input yoke
REC1547-9412A21	1547-9412A21	1.62, 1.65 (24/24)	6 Cyl inline 9-9/16" new style input yoke
REC1547-9412A22	1547-9412A22	1.81, 1.84 (17/19)	V6 & 470/485 9-9/16" new style input yoke
REC1547-9412A23	1547-9412A23	1.94, 1.98 (20/24)	4 Cyl inline 9-9/16" new style input yoke



MC1 / R / MR / ALPHA ONE

PARTE INFERIOR COMPLETA — COMPLETE GEAR HOUSING ASSEMBLY — PARTE INFERIORE COMPLETA — PARTIE INFÉRIEURE COMPLETE

STD OEM	1	CR OEM	1	ESTRÍAS EJE / SPLINE DRIVE SHAFT / SCALANATURE ASSE / SPLINES D'ARBRE		
1623-8951A43	REC1623-8951A43	1623-8951A33	REC1623-8951A33	13	13/21	6225577+ (1972-92)

CARCASA PARTE INFERIOR (Sin componentes)
GEAR HOUSING (Without components)
CARCASSA PARTE INFERIORE (Senza componenti)
BOÎTIER PARTIE INFÉRIEURE (sans les composants)

REF	OEM	
REC1623-5356A4	1623-5356A4	1 & R
REC1623-8951A37	1623-8951A37	Alpha One & MR

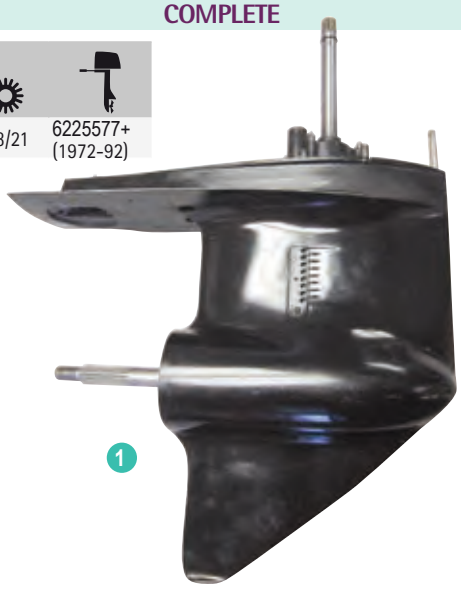

ALPHA ONE GEN II

COLA COMPLETA | COMPLETE DRIVE SHAFT | PIEDE COMPLETO | EMBASE COMPLÉT

STD ROT. (13/21 THEETH 1972-92) OEM	1	CONTRAROTACIÓN COUNTER ROTATION CONTRO-ROTAZIONE CONTRE-ROTATION OEM	1	2	REDUCCIÓN RATIO RIDUZIONE RÉDUCTION	
5-5121200TP	REC1623-815822A53	5-5111200TP	REC1623-815822A47	REC1547-861063A12	1.47 (20/22)	5.0L EFI 5.7 | 350 MAG (MPI) -300HP
5-5121300TP		5-5111300TP		REC1547-861063A10	1.62 (24/24)	4.3 LH / 4.3L EFI / 5.0L (MPI)
5-5121400TP		5-5111400TP		REC1547-861063A8	1.81 (17/19)	4.3L/ 4.3LX (MPI)
5-5121500TP		5-5111500TP		REC1547-861063A6	1.94 (20/24)	3.0L / 3.0LX (MPI)

Se suministra en dos piezas sin tornillos de unión ni ánodos. Para una instalación completa pida las siguientes referencias:

Supplied in 2 pieces without union screws nor anodes. For a complete installation ask for the following references:

Fornito in due pezzi senza viti di unione e senza anodi. Per un'installazione completa richiedere i seguenti riferimenti:

Livré en deux pièces sans vis de connexion et sans anodes. Pour une installation complète, veuillez demander les références suivantes :

REF					UN.
REC10-816601	TORNILLO	SCREW	VITE	VIS	4
REC11-859135	TUERCA	NUT	DADO	ÉCROU	4
REC12-45176	ARANDELA	WASHER	RONDELLA	RONDELLE	4
REC23-816583	TUBO AGUA	WATER TUBE	TUBO ACQUA	TUYAU D'EAU	1
CMALPHAKITA	KIT ANODOS	ANODES KIT	KIT ANODI	KIT ANODES	1

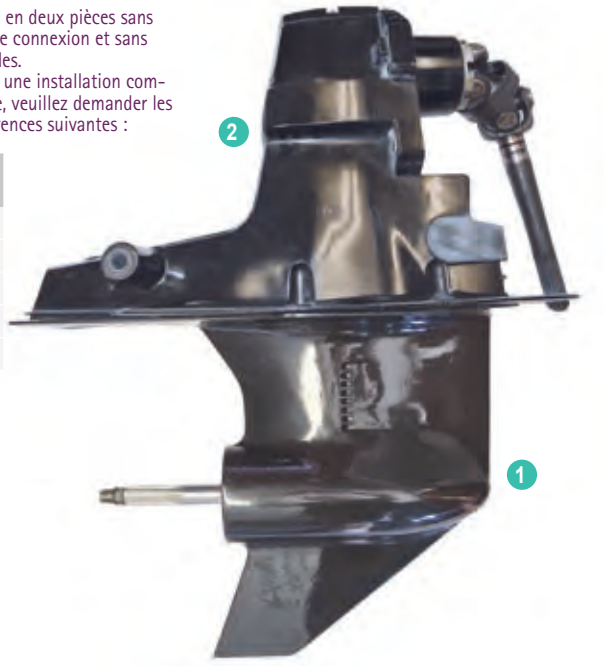

PARTE SUPERIOR COMPLETA | COMPLETE DRIVE SHAFT HOUSING | PARTE SUPERIORE COMPLETO | PARTIE SUPÉRIEURE COMPLETE

2	OEM	REDUCCIÓN RATIO RIDUZIONE RÉDUCTION	
REC1547-861063A12	1547-861063A12	1.47 (20/22)	5.0L EFI / 5.7 / 350 MAG
REC1547-861063A10	1547-861063A10	1.62 (24/24)	4.3LH / 4.3L EFI / 5.0L
REC1547-861063A8	1547-861063A8	1.81 (17/19)	4.3L / 4.3LX
REC1547-861063A6	1547-861063A6	1.94 (20/24)	3.0L / 3.0LX

CARCASA PARTE SUPERIOR (Sin componentes)
DRIVE SHAFT HOUSING (Without components)
CARCASSA PARTE SUPERIORE (Senza componenti)
BOÎTIER PARTIE SUPÉRIEURE (sans les composants)

REF	OEM	
REC1547-815930A7	1547-815930A7	0D469859-0K999999, (1991-97)

PARTE INFERIOR COMPLETA | COMPLETE GEAR HOUSING ASSEMBLY | PARTE INFERIORE COMPLETA | PARTIE INFÉRIEURE COMPLETE

STD OEM	1	CR OEM	1	REDUCCIÓN RATIO RIDUZIONE RÉDUCTION	
1623-815822A53 1623-815822A43 1623-815823A5 1623-815822A32	REC1623-815822A53	1623-815822A47	REC1623-815822A47	2.00 , 2.40	0D469859+
1623-815822A45 623-815822A55	REC1623-815822A55			2.00, 2.40 (14/28 dientes | teeth | denti | dents)	0L100040+ (1998+)

CARCASA PARTE INFERIOR (Sin componentes)
GEAR HOUSING (Without components)
CARCASSA PARTE INFERIORE (Senza componenti)
BOÎTIER PARTIE INFÉRIEURE (sans les composants)

REF	OEM	
REC1623-815822A30	1623-815822A30 1623-815822A6	0D469859-0K999999 3.50" OD FWD bearing

DESPIECE COLAS | GEAR CASE PARTS | PARTI PIEDI | PIÈCE D'EMBASES

R / MR / ALPHA ONE (6225577 - OD469858)

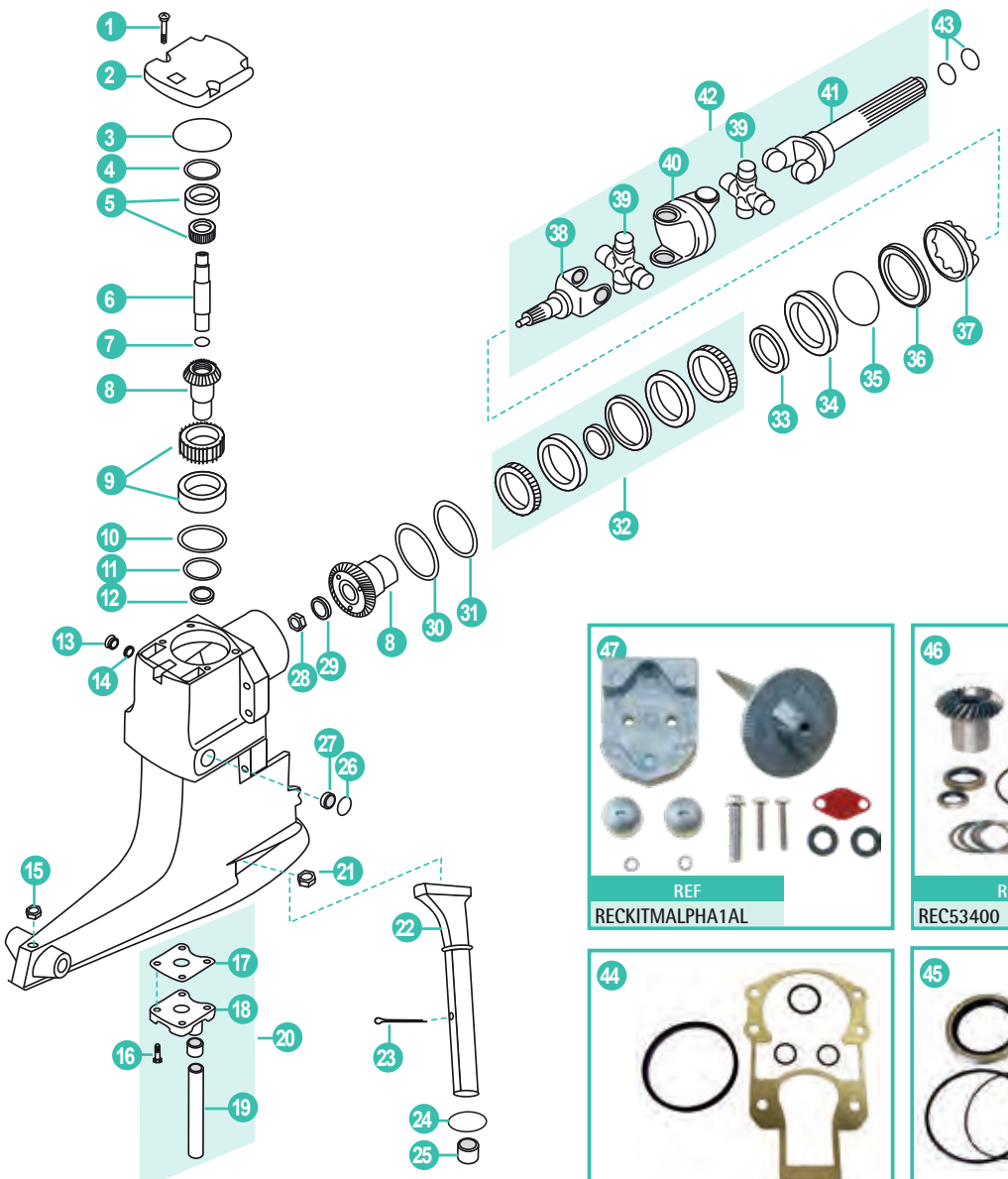

47
REF
RECKITMALPHA1AL

46
REF
REC53400



44
REF
REC27-64818Q4

45
REF
REC26-32511A1



Abrazadera U de acoplamiento (39385A1) en modelos en línea.

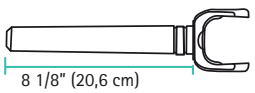

U-joint coupling end yoke (39385A1) used on older in-line models.

Il giogo terminale di giunzione a giunto U (39385A1) ha utilizzato i modelli on-line in linea.

Pince en U de couplage (39385A1) sur les modèles en ligne.

USO DE MODELOS ANTIGUOS DE COLAS EN MODELOS MERCRUISER IR-IMR

Mercury Marine no recomienda el uso de colas de modelos antiguos en modelos IR-IMR, ya que estas unidades no se acoplarán satisfactoriamente con el ensamblaje del transom. Además, las unidades en serie del modelo anterior, están equipadas con una horquilla de acoplamiento de unión en U (39385A1). Este eje es más corto que el (59830A1) usado en las unidades de impulsión de popa IR-IMR, y por lo tanto no acoplará completamente las estrías del motor. El uso del modelo más antiguo en un modelo de IR-IMR llevará al fallo de spline para acoplar al eje.

USE OF OLDER MODEL STERN DRIVE UNITS ON MERCRUISER IR-IMR MODELS

Mercury Marine does not recommended the use of older model stern drive units on IR-IMR models, as these units will not mate up satisfactorily with the transom assembly. In addition, the older model in-line stern drive units are equipped with U-joint coupling end yoke (39385A1). This yoke is shorter than yoke (59830A1) used on the IR-IMR stern drive units, and therefore will not fully engage the engine coupler splines. Use of an older in-line model stern drive unit on a IR-IMR model will result in a spline failure to coupling an/or yoke.

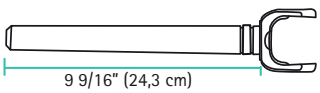

UTILIZZO DI MODELLI OLDER PIEDE SUI MODELLI IR-IMR MERCRUISER

Mercury Marine non ha raccomandato l'uso Mercury Marine non ha raccomandato l'uso di unità di trasmissione a poppa più vecchie su modelli IR-IMR, in quanto queste unità non si addicono in modo soddisfacente con l'assemblaggio del trampolo. In aggiunta, le unità di comando a poppa in linea in versione anteriore sono dotate di giogo terminale di giunzione a U (39385A1). Questo giogo è più corto del giogo (59830A1) usato sulle unità di azionamento a poppa IR-IMR e pertanto non impegna completamente le spline di accoppiatore del motore. L'uso di un'unità anteriore di tipo a poppa modello in linea su un modello IR-IMR provocherà un errore di spline per accoppiare un / o giogo.

UTILISATION DES QUEUES DE MODÈLES PLUS ANCIENS SUR LES MODÈLES MERCRUISER IR-IMR

Mercury Marine ne recommande pas l'utilisation d'anciens modèles de queues sur les modèles IR-IMR, car ces unités ne s'accoupleront pas de manière satisfaisante avec l'assemblage du tableau arrière. En outre, les unités de l'ancienne série sont équipées d'une fourche d'accouplement en U (39385A1). Cet arbre est plus court que le (59830A1) utilisé dans les unités d'entraînement arrière IR-IMR, et ne s'engage donc pas complètement dans les cannelures du moteur. L'utilisation de l'ancien modèle dans un modèle IR-IMR entraînera l'échec de l'accouplement des cannelures à l'arbre.

	REF	OEM				
1	REC10-98794	10-98794	TORNILLOS TAPA 3/8-16	SCREW 3/8-16	VITE 3/8-16	VIS 3/8-16
2	REC94998A4	94998A4	TAPA CON COJINETE	COVER ASSEMBLY	COPERCHIO CON CUSCINETTO	COUVERCLE AVEC ROULEMNTE
3	REC25-32546	25-32546	ARO TÓRICO	O-RING	O-RING	JOINT TORIQUE
4	REC15-45691A1	15-45691A1	SUPLEMENTO (para REC31-61100A1)	SHIM (For REC31-61100A1)	SPESSORE (Per REC31-61100A1)	SUPPLEMENT (Pour REC31-61100A1)
	REC15-32563A1	15-32563A1	SUPLEMENTO (Para REC31-35988A12)	SHIM (For REC31-35988A12)	SPESSORE (Ped REC31-35988A12)	SUPPLEMENT (Pour REC31-35988A12)
5	REC31-61100A1	31-61100A1	COJINETE Ø EXT. 49 mm	BEARING ASSY EXT. Ø 49 mm	CUSCINETTO Ø EST. 49 mm	ROULEMENT Ø EXT. 49 mm
	REC31-32575T1	31-32575T1	COJINETE Ø EXT. 45 mm	BEARING ASSY EXT.L Ø 45 mm	CUSCINETTO Ø EST. 45 mm	ROULEMENT Ø EXT. 45 mm
6	REC45-55796	45-55796	EJE PIÑÓN	DRIVE SHAFT	ASSE PIGNONE	ARBRE PIGNON
7	REC25-55801	25-55801	ARO TÓRICO	O-RING	O-RING	JOINT TORIQUE
8	RM43-66773A3	43-66773A3	KIT PIÑONES (Red. 1.32) (16-20)	GEAR SET (1.32) (16-20)	KIT PIGNONI (Rid. 1.32) (16-20)	KIT PIGNON (Réd. 1.32) (16-20)
	REC43-18411A2	43-18411A2	KIT PIÑONES H.D. (Red.1.50) (20-22)	GEAR SET HD (1.50) (20-22)	KIT PIGNONI RINFORZATI (Rid.1.50) (20-22)	KIT PIGNON HD (Réd. 1.50) (20-22)
	REC43-45814A5	43-45814A5	KIT PIÑONES (Red.1.65) (24-24)	GEAR SET (1.65) (24-24)	KIT PIGNONI (Rid.1.65) (24-24)	KIT PIGNON (Réd. 1.65) (24-24)
	REC43-75325A3	43-75325A3	KIT PIÑONES H.D. (Red.1.84) (17-19)	GEAR SET HD (1.84) (17-19)	KIT PIGNONI RINFORZATI (Rid.1.84) (17-19)	KIT PIGNON HD (Réd. 1.84) (17-19)
	REC43-55778A3	43-55778A3	KIT PIÑONES (Red.1.98) (20-24)	GEAR SET (1.98) (20-24)	KIT PIGNONI (RID.1.98) (20-24)	KIT PIGNON (Réd 1.98) (20-24)
9	REC31-32573A1	31-32573A1	RODAMIENTO (Red.1.50) ANTIGUA	ROLLER BEARING (1.50) OLD	CUSCINETTO (Rid.1.50) VECCHIO	ROULEMENT (Réd. 1.50) ANCIEN
	REC31-35990A1	31-35990A1	RODAMIENTO (Red.1.65-1.84-1.98)	ROLLER BEARING (1.65-1.84-1.98)	CUSCINETTO (Rid.1.65-1.84-1.98)	ROULEMENT (Réd. 1.65-1.84-1.98)
	REC31-66818A1	31-66818A1	RODAMIENTO (Red.1.32)	ROLLER BEARING (1.32)	CUSCINETTO (Rlid.1.32)	ROULEMENT (Réd. 1.32)
10	REC15-36178A02	15-36178A02	SUPLEMENTO	SHIM	SPESSORE	SUPPLEMENT
11	REC26-32511	26-32511	RETÉN	OIL SEAL	PARAOLIO	JOINT D'HUILE
12	REC26-965031	26-965031	RETÉN	OIL SEAL	PARAOLIO	JOINT D'HUILE
13	REC10-79953Q04	10-79953Q04	TAPÓN ACEITE	SCREW	TAPPO OLIO	BOUCHON D'HUILE
14	REC12-191833	12-191833	JUNTA TAPÓN	WASHER	GUARNIZIONE TAPPO	JOINT BOUCHON
15	REC19-47579	19-47579	TAPA PLÁSTICO	PLUG	COPERCHIO IN PLASTICA	COUVERCLE PLASTIC
16	REC10-28668	10-28668	TORNILLO	SCREW	VITE	VIS
17	REC27-558101	27-55810 1	JUNTA	GASKET	GUARNIZIONE	JOINT
18	REC26-36557	26-36557	CASQUILLO GOMA	GROMMET	BOCCOLA IN GOMMA	JOINT CAOUTCHOUC
19	REC32-54236	32-54236	TUBO DE GOMA	WATER TUBE	TUBO IN GOMMA	DURITE CAOUTCHOUC
20	REC42724A3	42724A3	KIT REFRIGERACIÓN	WATER POCKET COVER KIT	KIT RIPARAZIONE	KIT REPARATION
21	REC11-34933	11-859116	TUERCA	NUT	DADO	ÉCROU
22	REC621041	621041	EJE SELECTOR	SELECTOR SHAFT	ASSE SELETTORE	ARBRE
23	REC18-32665	18-32665	PASADOR	PIN	FERMO	GOUPILLE
24	REC12-32666	12-32666	ARANDELA	WASHER	RONDELLA	RONDELLE
25	REC23-32632	23-32632	CASQUILLO	BUSHING	BOCCOLA	BAGUE
26	REC19-42682	19-42682	TAPÓN	WELCH PLUG (1-174 O.D.)	TAPPO	BOUCHON
27	REC22-428611	22-428611	TAPA TAPÓN	PIPE PLUG	COPERCHIO TAPPO	CUVERCLE BOUCHON
28	REC11-22339	11-22339	TUERCA	NUT	DADO	ÉCROU
29	REC12-45810	12-45810	ARANDELA TOPE	WASHER	RONDELLA	RONDELLE
30	REC15-71013	15-71013	SUPLEMENTO	SHIM	SPESSORE	SUPPLEMENT
31	REC15-35980A1	15-35980A1	SUPLEMENTO	SHIM	SPESSORE	SUPPLEMENT
32	REC31-35988A12	31-35988A12	RODAMIENTO (excepto 1.32)	ROLLER BEARING (except 1.32)	CUSCINETTO (eccetto 1.32)	ROULEMENT (excep 1.32)
33	REC26-823894	26-823894	RETÉN	OIL SEAL	PARAOLIO	JOINT D'HUILE
34	REC66081A2	66081A2	CIERRE CARCASA	CARRIER ASSEMBLY	CHIUSURA CARCASSA	JOINT SPI DE CARDAN
35	REC25-70937	25-70937	ARO TÓRICO	O-RING	O-RING	JOINT TORIQUE
36	REC35983	35983	ARO METÁLICO	RING	O-RING METALLICO	BAGUE METALLIQUE
37	REC8168112	8168112	TUERCA PORTA RETÉN	RETAINER	DADO, SEDE PARAOLIO	ECROU À CRENAUX
38	REC46020T02	46020T02	EJE CORTO CARDÁN	YOKE	ASSE CARDANO	CARDAN
39	REC3850812	75832T1	CRUCETA CARDÁN	U-JOINT	CROCIERA CARDANO	CROISILLON CARDAN
	REC75832T	75832T	CRUCETA CARDÁN (4 en línea y V6)	U-JOINT (4 inline & V6)	CROCIERA CARDANO (4 in linea e V6)	CROISILLON CARDAN (4 en ligne et V6)
	REC805536A2	805536A2	CRUCETA AUTOENGRASE	U-JOINT SELF GREASE	CROCIERA AUTOINGRASSANTE	CROISILLON DE CARDAN
40	REC393831	393831	RÓTULA CARDÁN	SOCKET	SEDE CARDANO	CARDAN
41	REC59830A7	59830A7	EJE LARGO CARDÁN (9-9/16"	YOKE ASSEMBLY (9-9/16")	ASSE CARDANO (9-9/16")	CARDAN (9-9/16")
42	REC814819A2	814819A2	CARDÁN COMPLETO	U-JOINT ASSEMBLY	CARDANO COMPLETO	CARDAN COMPLET
43	REC25-25439	25-25439	ARO TÓRICO	O-RING	O-RING	JOINT TORIQUE
44	REC27-64818Q4	26-64818Q4 27-64718A1	KIT DE JUNTAS	GASKET KIT	KIT GUARNIZIONE	KIT JOINTS
45	REC26-32511A1	26-32511A1	KIT DE JUNTAS	GASKET KIT	KIT GUARNIZIONE	KIT JOINTS
46	REC43-18411A2	43-18411A4	KIT PIÑONES Y COJINETE Reforzados 20/22 (Red. 1.50) Para V8.	DRIVE SHAFT HOUSING GEAR SET Heavy duty 20/22 (ratio 1.50) for V8	KIT PIGNONI E CUSCINETTI Rinforzati 20/22 Denti (Rid. 1.50) Per V8.	KIT PIGNON ET ROULEMENTS Renforcé 20/22 (Réd. 1.50) Pour V8.
47	RECKITMALPHA1AL		KIT ÁNODOS ALUMINIO	ANODES KIT AL	KIT ANODI AL	KIT ANODES AL

MC1 / R

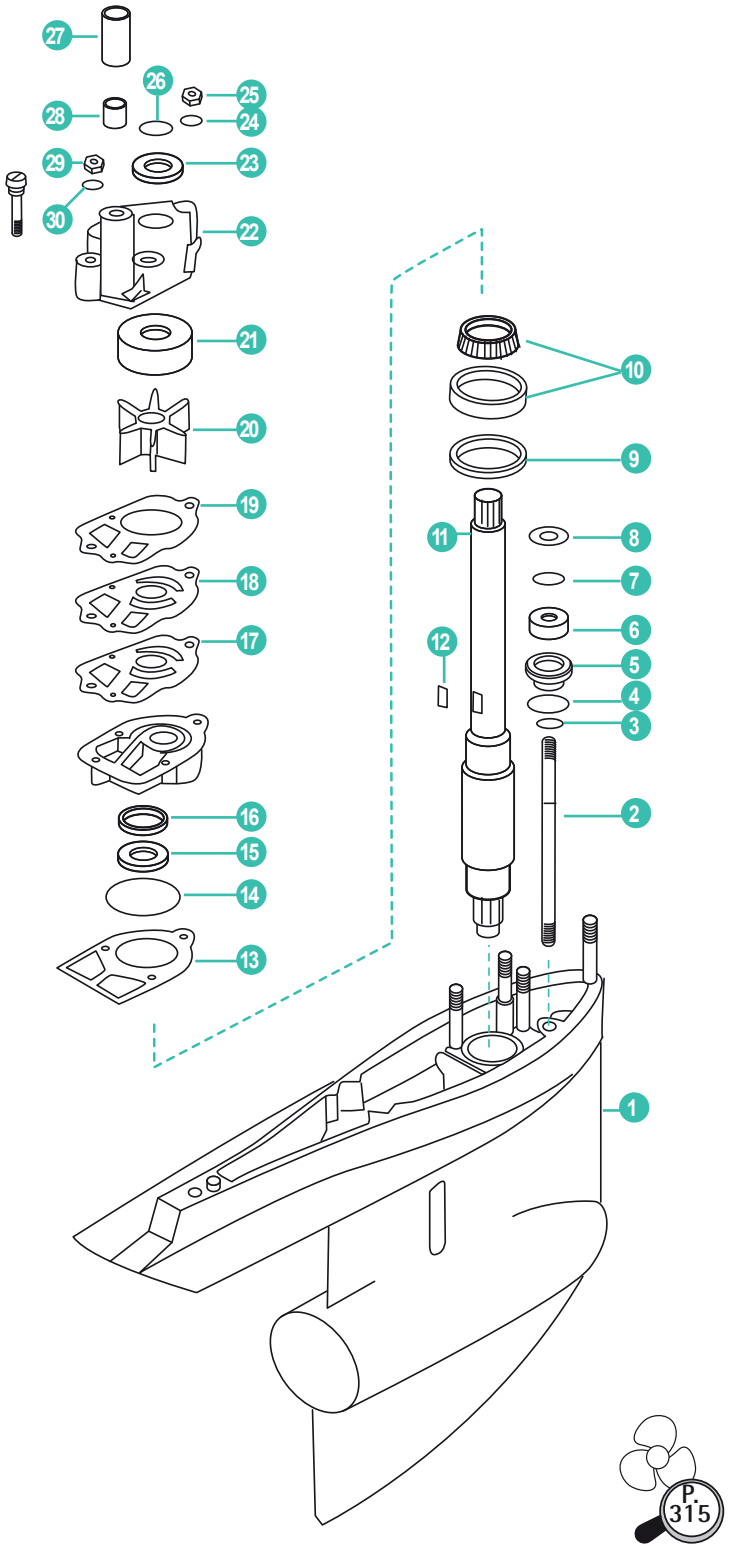

31



REF
REC12110

32



REF
REC47-899840S

33



REF
REC46-64141A11

34



REF
REC26-33144A2

	REF	OEM				
1	REC1623-5356A4	1623-5356A4	CARCASA	HOUSING	CARCASSA	ENSEMBLE BOITIER DE VITESSE
2	REC774811	774811	EJE TRANSMISIÓN	SHIFT	ASSE	ARBRE
3	REC12-27880	12-27880	ARO	O-RING	O-RING	JOINT TORIQUE
4	REC25-25439	25-25439	ARO TÓRICO	O-RING	TENUTA	JOINT TORIQUE
5	REC23-30617A2	23-30617A2	ACOPLE EJE	ATTACHING SHAFT	FISSAGGIO ASSE	BUSING DE L'ARBRE DE TRANSMISSION
6	REC26-8164641	26-8164641	RETÉN	SEAL	TENUTA	JOINT D'HUILE
7	REC12-31266	12-31266	ARANDELA	WASHER	RONDELLA	RONDELLE
8	REC8M0042641	12-8M0042641	ARANDELA	WASHER	RONDELLA	RONDELLE
9	REC15-57007A1	15-57007A1	SUPLEMENTO	SPACER	DISTANZIALE	SUPPLEMENT
10	REC31-53079A1	31-53079A1	RODAMIENTO	BEARING	CUSCINETTO	ROULEMENT
11	REC45-41939F1	45-41939F1	EJE TRANSMISIÓN	TRANSMITION SHAFT	ASSE TRASMISSIONE	ARBRE TRANSMISSION
12	REC8M0032834	28-8M0032834	CHAVETA	KEY	CHIAVETTA	CLAVETTE
13	REC27-856704	27-856704	JUNTA	GASKET	GUARNIZIONE	JOINT
14	REC25-33145	25-33145	ARO TÓRICO	O-RING	O-RING	JOINT TORIQUE
15	REC26-89238	26-89238	RETÉN	SEAL	TENUTA	JOINT D'HUILE
16	REC26-16977	26-16977	RETÉN	SEAL	TENUTA	JOINT D'HUILE
17	REC27-856081	27-856081	JUNTA BOMBA	PUMP GASKET	GUARNIZIONE POMPA	JOINT POMPE
18	REC324351	324351	TAPA BOMBA AGUA	COVER	COPERCHIO POMPA ACQUA	COUVERCLE POMPE À EAU
19	REC27-858524	27-858524	JUNTA TAPA BOMBA	COVER GASKET	GUARNIZIONE COPERCHIO	JOINT COUVERCLE POMPE
20	REC47-89984T4	47-89984T4	IMPULSOR	IMPELLER	GIRANTE	TURBINE
21	REC48752T	48752T	CASQUILLO BOMBA	INSERT	BOCCOLA	INSERT
22	REC46-96148T1	46-96148T1	CUERPO BOMBA AGUA	HOUSING WATER PUMP	CORPO POMPA ACQUA	CORPS POMPE À EAU
23	REC25-30271	25-30271	ARANDELA	WASHER	RONDELLA	RONDELLE
24	PAGB/T97.1-8	12-36001	ARANDELA	WASHER	RONDELLA	RONDELLE
25	REC11-13436	11-13436	TUERCA	NUT	DADO	ÉCROU
26	REC25-30613	25-30613	ANILLO GOMA	RUBBER RING	TENUTA	JOINT À CAOUTCHOUC
27	REC23-29804T	23-29804T	TUBO GUÍA	WATER PIPE	TUBO	TUYAU
28	REC26-38970	26-38970	RETÉN	OIL SEAL	TENUTA	JOINT D'HUILE
29	REC11-8267089	11-8267089	TUERCA	NUT	DADO	ÉCROU
30	PAGB/T848-6	12-29245	ARANDELA	WASHER	RONDELLA	RONDELLE
31	REC12110		KIT REPARACIÓN (1970-83)	SEAL KIT (1970-83)	KIT RIPARAZIONE (1970-83)	KIT POMPE (1970-83)
32	REC47-89984Q5		KIT REPARACIÓN	SEAL KIT	KIT RIPARAZIONE	KIT POMPE
33	REC46-64141A11		KIT REPARACIÓN MC1 (-1968)	SEAL KIT MC1 (-1968)	KIT RIPARAZIONE MC1 (-1968)	KIT POMPE MC1 (-1968)
34	REC26-33144A2	26-33144A2	KIT REPARACIÓN	SEAL KIT	KIT RIPARAZIONE	KIT POMPE



REC80W90U3
REC80W90U6
RECGREU1
RECGREU12

P. 25

MC1 / R

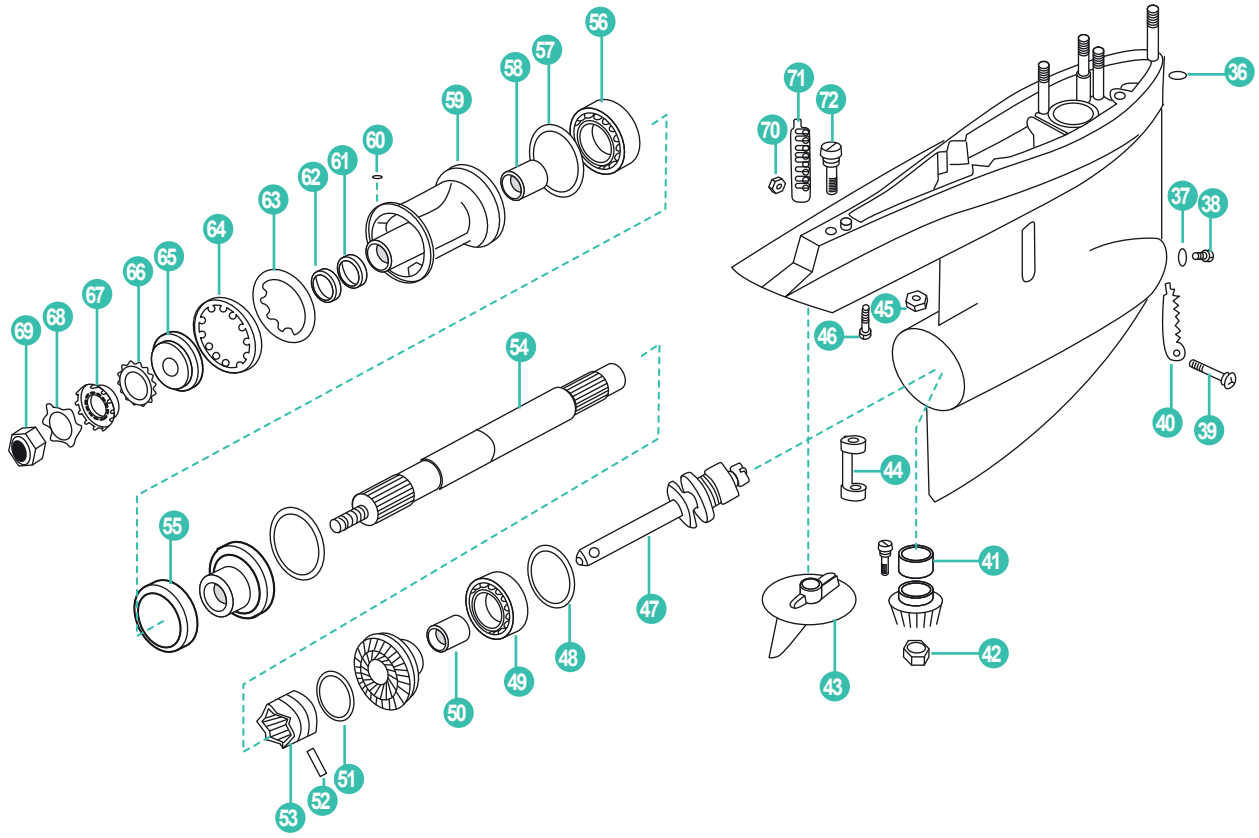

P. 315

73



REF
REC11-52707Q1

74





REC80W90U3
REC80W90U6
RECGREU1
RECGREU12

P. 25

	REF	OEM				
36	REC26-455771	26-455771	RETÉN	SEAL	TENUTA	JOINT D'HUILE
37	REC12-191833	12-191833	JUNTA	GASKET	GUARNIZIONE	JOINT
38	REC22-67892A05	8M0058389	TORNILLO CON RETÉN	SCREW WITH SEAL	VITE CON TENUTA	VIS AVEC JOINT
39	REC10-76156	10-76156	TORNILLO	SCREW	VITE	VIS
40	REC934231	934231	TAPA REFRIGERACIÓN	CAP	COPERCHIO	COUVERCLE
41	REC31-92366A1	31-92366A1	RODAMIENTO	BEARING	CUSCINETTO	ROULEMENT
42	REC11-35921	11-35921	TUERCA PIÑÓN	PINION NUT	PIGNONE DADO	PIGNON ÉCROU
43	CM31640	31640Q4	ANODO TIMÓN ZN	ZN ANODE	ANODO ZN	ANODE ZN
	CM31640A	31640Q4	ANODO TIMÓN AL	AL ANODE	ANODO AL	ANODE AL
44	REC76865	76865	HORQUILLA CAMBIO	CLIP	CLIP CAMBIO	FOURCHETTE
45	REC11-34933	11-859116	TUERCA	NUT	DADO	ÉCROU
46	REC10-30206	10-30206	TORNILLO	SCREW	VITE	VIS
47	REC818349T1	818349T1	EJE DESPLAZABLE	SLIDE SHIFT	PASSANTE	SELECTEUR D'INVERSEUR
48	REC15-47397A1	15-47397A1	ARANDELA	WASHER	RONDELLA	RONDELLE
49	REC31-35928T1	31-35928T1	RODAMIENTO	BEARING	CUSCINETTO	ROULEMENT
50	REC31-30895T	31-30895T	RODAMIENTO	BEARING	CUSCINETTO	ROULEMENT
51	REC31-30895T	24-30893	MUELLE	SPRING	MOLLA	RESSORT
52	REC17-8M0084681	8M0020941	PASADOR	PIN	SPINOTTO	GOUPILLE
53	REC52-853594T	52-853594T	PIÑÓN CAMBIO	SHAFT PINION	PIGNONE CAMBIO	PIGNON CHANGEMENT
54	REC44-824110	44-824110	EJE HÉLICE	SHAFT PROPELLER	ASSE ELICA	ARBRE HÉLICE
55	REC35915	35915	SEPARADOR PIÑÓN	SPACER PINION	DISTANZIALE PIGNONE	ENTRETOISE DE PIGNON
56	REC30-88957T	30-88957T	RODAMIENTO	BEARING	CUSCINETTO	ROULEMENT
57	REC25-31534	25-31534	ARO TÓRICO	O-RING	ANELLO	JOINT TORIQUE
58	REC387247	31-30956T	RODAMIENTO	BEARING	CUSCINETTO	ROULEMENT
59	REC818763A10	818763A10	COJINETE COLA	SHAFT BEARING	CUSCINETTO PIEDE	ROULEMENT EMBASE
60	REC28-30281	28-30281	CIERRE	CAP	CHIUSURA	CLAVETTE
61	REC26-76868	26-76868	RETÉN INTERIOR	INNER SEAL	TENUTA INTERNO	JOINT TORIQUE
62	REC26-12224	26-12224	RETÉN EXTERIOR	OUTLER SEAL	TENUTA ESTERNO	JOINT D'HUILE
63	REC14-79447	14-79447	ARANDELA CIERRE	WASHER CAP	RONDELLA CHIUSURA	RONDELLE
64	REC8M2011027	8M2011027	TUERCA	NUT	DADO	ÉCROU
65	REC12-835467Q01	12-835467Q01	SEPARADOR	SPACER	DISTANZIALE	RONDELLE D'HÉLICE
66	REC13-423511	13-42351-1	ARANDELA CIERRE	WASHER CAP	RONDELLA CHIUSURA	RONDELLE FREIN
67	REC12-31211Q03	12-31211Q03	CASQUILLO	INSERT, CARTDRIGE	GHIERA	RONDELLE FREIN DE DIABOLO
68	REC90508-ZW1-003	816629Q	ARANDELA TUERCA	WASHER NUT	RONDELLA DADO	RONDELLE ÉCROU
69	REC90301-ZW1-003	11-827614	TUERCA EJE	NUT SHAFT	DADO ASSE	ÉCROU D'ARBRE
70	REC11-859124	11-859124	TUERCA	NUT	DADO	ÉCROU
71	REC934241	934241	TAPA REFRIGERACIÓN	CAP	COPERCHIO	COUVERCLE
72	REC10-32470	10-32470	TORNILLO	SCREW	VITE	VIS
73	REC11-52707Q1	11-52707Q1	KIT CIERRE HÉLICE	PROPELLER NUT KIT	KIT CIUSSURA ELICHA	KIT ÉCROU D'HÉLICE
74	RECKITMALPHA1AL		KIT ÁNODOS AL	ANODE KIT AL	KIT ANODI AL	KIT ANODES AL
	CMALPHAGEN1KITA		KIT ÁNODOS AL	ANODE KIT AL	KIT ANODI AL	KIT ANODES AL
	CMALPHAGEN1KITM		KIT ÁNODOS MG	ANODE KIT MG	KIT ANODI MG	KIT ANODES MG
	TENKITALPHAONE/1		KIT ÁNODOS ZN	ANODE KIT ZN	KIT ANODI ZN	KIT ANODES ZN

MR / ALPHA ONE

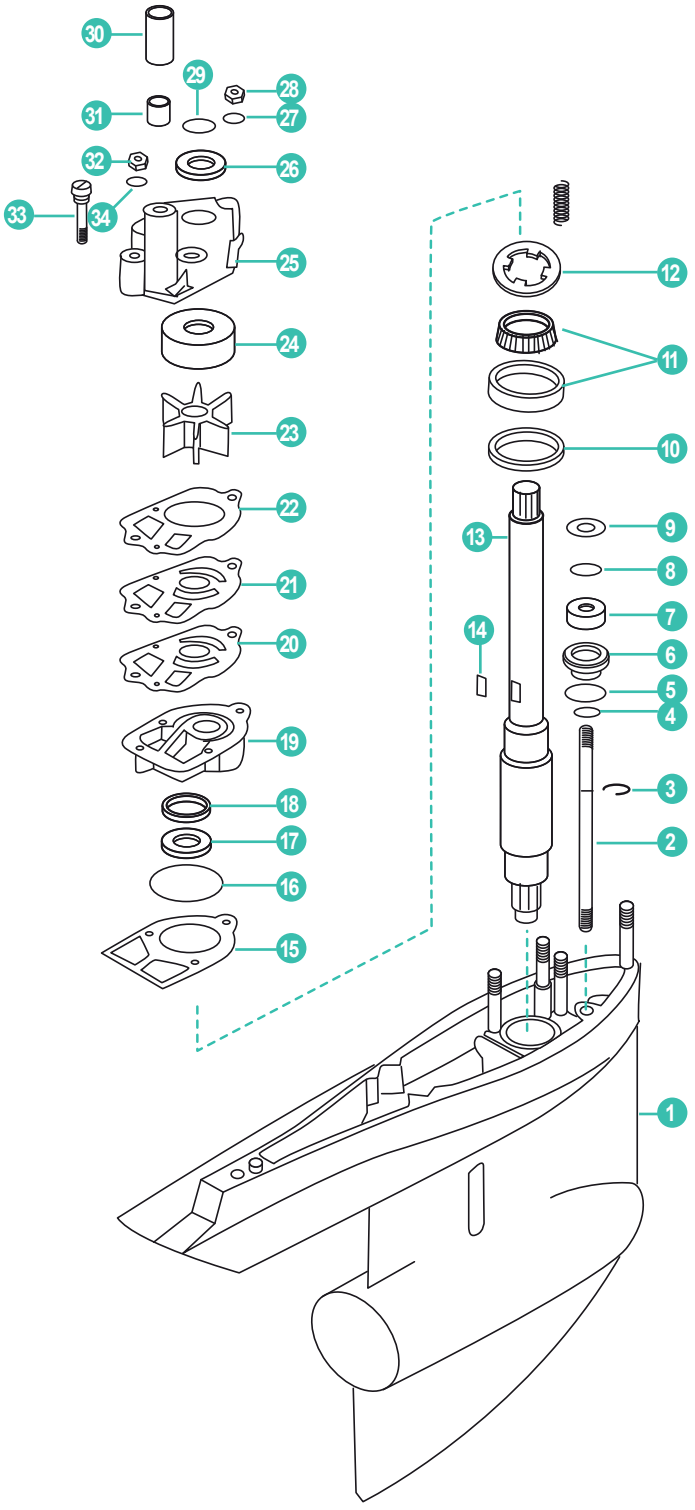

35



REF
REC12120

36



REF
REC47-899840S

37



REF
REC26-33144A2

P. 315

	REF	OEM				
1	REC1623-8951A37	1623-8951A37	CARCASA	HOUSING	CARCASSA	CARTER EMBASE
2	REC774811	774811	EJE TRANSMISIÓN	SHIFT	ASSE	ARBRE TRANSMISSION
3	REC53-29641	53-29641	CLIP	LOCKER	CLIP	CLIPS
4	REC12-27880	12-27880	ARO	O-RING	O-RING	JOINT TORIQUE
5	REC25-25439	25-25439	ARO TÓRICO	O-RING	O-RING	JOIN TORIQUE
6	REC23-30617A2	23-30617A2	ACOPLE EJE	ATTACHING SHAFT	FISSAGGIO ASSE	BUSING DE L'ARBRE
7	REC26-8164641	26-8164641	RETÉN	SEAL	TENUTA	JOINT D'HUILE
8	REC12-31266	12-31266	ARANDELA	WASHER	RONDELLA	RONDELLE
9	REC8M0042641	8M0042641	ARANDELA	WASHER	RONDELLA	RONDELLE
10	REC15-42637A1	15-42637A1	GRUESO	SHIM	SPESSORE	KIT CALE D'EPAISSEUR
11	REC31-36387A1	31-36387A1	RODAMIENTO	BEARING	CUSCINETTO	ROULEMENT
12	REC8245191	8245191	ARANDELA	WASHER	RONDELLA	RONDELLE
13	REC45-42634	45-42634	EJE TRANSMISIÓN	TRANSMITION SHAFT	ASSE TRASMISIONE	ARBRE DE TRANSMISSION
14	REC8M0032834	8M0032834	CHAVETA	KEY	CHIAVETTA	CLAVETTE
15	REC27-426311	27-42631-1	JUNTA	GASKET	GUARNIZIONE	JOINT
16	REC25-38099	25-38099	ARO TÓRICO (Ø 2.125")	O-RING (Ø 2.125")	O-RING (Ø 2.125")	JOINT TORIQUE (Ø 2.125")
	REC25-90011	25-90011	ARO TÓRICO (Ø 2.188")	O-RING (Ø 2.188")	O-RING (Ø 2.188")	JOINT TORIQUE (Ø 2.188")
17	REC26-89238	26-89238	RETÉN	SEAL	TENUTA	JOINT D'HUILE
18	REC26-16977	26-16977	RETÉN	SEAL	TENUTA	JOINT D'HUILE
19	REC46-44292Q03	46-44292Q03	BASE BOMBA	PUMP BASE	BASE POMPA	BASE POMPE
20	REC27-856081	27-856081	JUNTA BOMBA	PUMP GASKET	GUARNIZIONE POMPA	JOINT POMPE
21	REC324351	324351	TAPA BOMBA AGUA	COVER	COPERCHIO	COUVERCLE POMPE
22	REC27-858524	27-858524	JUNTA TAPA BOMBA	COVER GASKET	GUARNIZIONE COPERCHIO	JOINT COUVERCLE
23	REC47-89984T4	47-89984T4	IMPULSOR	IMPELLER	GIRANTE	TURBINE
24	REC48752T	48752T	CASQUILLO BOMBA	INSERT	BOCCOLA	INSERT
25	REC46-96148T1	46-96148T1	CUERPO BOMBA AGUA	HOUSING WATER PUMP	CORPO POMPA ACQUA	CORPS POMPE
26	REC25-30271	25-30271	RETÉN	SEAL	TENUTA	JOINT
27	PAGB/T97.1-8	12-36001	ARANDELA	WASHER	RONDELLA	RONDELLE
28	REC11-13436	11-13436	TUERCA	NUT	DADO	ÉCROU
29	REC25-30613	25-30613	ARO TÓRICO	O-RING	O-RING	JOINT TORIQUE
30	REC23-29804T	23-29804T	TUBO GUÍA	WATER PIPE	TUBO	TUYAU
31	REC26-38970	26-38970	RETÉN	SEAL	TENUTA	JOINT
32	REC11-8267089	11-8267089	TUERCA	NUT	DADO	ÉCROU
33	REC10-96411	10-96411	TORNILLO	SCREW	VITE	VIS
34	PAGB/T848-6	12-29245	ARANDELA	WASHER	RONDELLA	RONDELLE
35	REC12120		KIT REPARACIÓN	SEAL KIT	KIT RIPARAZIONE	KIT POMPE A EAU
36	REC47-89984Q5		KIT REPARACIÓN	SEAL KIT	KIT RIPARAZIONE	KIT POMPE A EAU
37	REC26-33144A2	26-33144A2	KIT REPARACIÓN	SEAL KIT	KIT RIPARAZIONE	KIT POMPE A EAU

MR / ALPHA ONE

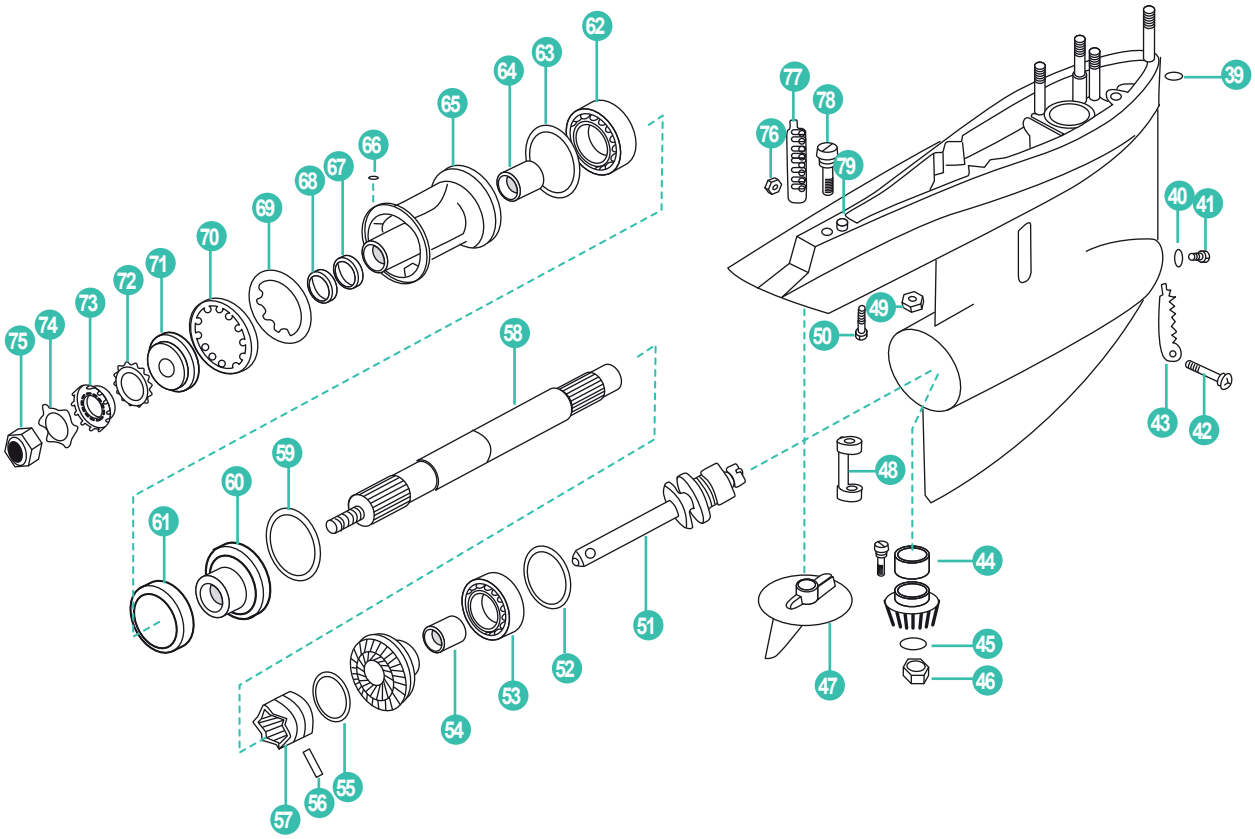
62
63
64
65
66
67
68
69
70
71
72
73
74
75
58
59
60
61
77
78
76
79
39
40
41
49
50
48
43
42
44
45
46
47
51
52
53
54
55
56
57


REC80W90U3
REC80W90U6
RECGREU1
RECGREU12
P. 25


80
REF
REC11-52707Q1


81


82


P. 315

	REF	OEM				
39	REC26-455771	26-45577 1	RETÉN	SEAL	TENUTA	JOINT D'HUILE
40	REC12-191833	12-191833	JUNTA	GASKET	GUARNIZIONE	JOINT
41	REC22-67892A05	8M0058389	TORNILLO CON RETÉN	SCREW WITH SEAL	VITE CON TENUTA	VIS AVEC JOINT
42	REC10-76156	10-76156	TORNILLO	SCREW	VITE	VIS
43	REC934231	934231	TAPA REFRIGERACIÓN	CAP	COPERCHIO	COUVERCLE
44	REC387817	31-42647A1	RODAMIENTO	BEARING	CUSCINETTO	ROULEMENT
45	REC350038	12-92721	CIERRE	CAP	CHIUSURA	JOINT
46	REC11-35921	11-35921	TUERCA PIÑÓN	PINION NUT	DADO PIGNONE	ÉCROU PIGNON
47	CM31640	31640Q4	ANODO TIMÓN ZN	ZN SHAFT ANODE	ANODO ZN	ANODE ZN
	CM31640A	31640Q4	ANODO TIMÓN AL	AL SHAFT ANODE	ANODO AL	ANODE AL
48	REC76865	76865	HORQUILLA CAMBIO	CLIP	CLIP	FOURCHETTE
49	REC11-34933	11-859116	TUERCA	NUT	DADO	ÉCROU
50	REC10-30206	10-30206	TORNILLO	SCREW	VITE	VIS
51	REC818349T1	818349T1	EJE DESPLAZABLE	SLIDE SHIFT	PASSANTE	SELECTEUR D'INVERSEUR
52	REC15-47397A1	15-47397A1	ARANDELA	WASHER	RONDELLA	RONDELLE
53	REC31-35928T1	31-35928T1	RODAMIENTO Ø 47,6 mm	BEARING Ø 47.6 mm	CUSCINETTO Ø 47.6 mm	ROULEMENT Ø 47,6 mm
	REC31-828437A2	31-828437A2	RODAMIENTO Ø 44,4 mm	BEARING Ø 44.4 mm	CUSCINETTO Ø 44.4 mm	ROULEMENT Ø 44.4 mm
54	REC31-30895T	31-30895T	RODAMIENTO	BEARING	CUSCINETTO	ROULEMENT
55	REC24-30893	24-30893	MUELLE	SPRING	MOLLA	RESSORT
56	REC17-8M0084681	8M0020941	PASADOR	PIN	SPINOTTO	GOUPILLE
57	REC52-853594T	52-853594T	PIÑÓN CAMBIO	SHAFT PINION	PIGNONE CAMBIO	CRABOT
58	REC44-824110	44-824110	EJE HÉLICE	SHAFT PROPELLER	ASSE ELICA	ARBRE D'HÉLICE
	REC44-8146061	44-8146061	EJE HÉLICE	SHAFT PROPELLER	ASSE ELICA	ARBRE D'HÉLICE
59	REC23-824108	23-824108	ESPACIADOR	SPACER	DISTANZIALE	CALE
60	REC43-828073A1	43-828073A1	PIÑÓN MARCHA A ATRÁS	PINION REVERSE	PIGNONE RETROMARCIA	PIGNON MARCHE ARRIÈRE
61	REC681001	681001	SEPARADOR PIÑÓN	PINION SPACER	DISTANZIALE PIGNONE	CALE
62	REC30-88957T	30-88957T	RODAMIENTO	BEARING	CUSCINETTO	ROULMENT
63	REC25-31534	25-31534	ARO TÓRICO	O-RING	ANELLO	JOINT TORIQUE
64	REC387247	31-30956T	RODAMIENTO	BEARING	CUSCINETTO	ROULEMENT
65	REC818763A10	818763A10	COJINETE COLA	SHAFT BEARING	CUSCINETTO PIEDE	DIABOLO
	REC14587A7	14587A5	COJINETE COLA	SHAFT BEARING	CUSCINETTO PIEDE	DIABOLO
66	REC28-30281	28-30281	CHAVETA	KEY	CHIAVETTA	CLAVETTE
67	REC26-76868	26-76868	RETÉN INTERIOR	INNER SEAL	TENUTA INTERNO	JOINT TORIQUE
68	REC26-12224	26-12224	RETÉN EXTERIOR	OUTLER SEAL	TENUTA ESTERNO	JOINT TORIQUE
69	REC14-18323	14-18323	ARANDELA CIERRE	WASHER	RONDELLA CHIUSURA	RONDELLE
70	REC8M2011027	8M2011027	TUERCA	NUT	DADO	ÉCROU
71	REC12-835467Q01	12-835467Q01	SEPARADOR	SPACER	DISTANZIALE	CALE
72	REC13-423511	13-423511	ARANDELA CIERRE	WASHER	RONDELLA CHIUSURA	RONDELLE
73	REC12-31211Q03	12-31211Q03	CASQUILLO	INSERT	BOCCOLA	INSERT
74	REC90508-ZW1-003	14-816629Q	ARANDELA TUERCA	WASHER NUT	RONDELLA DADO	RONDELLE ÉCROU
75	REC90301-ZW1-003	11-827614	TUERCA EJE	SHAFT NUT	DADO ASSE	ÉCROU ARBRE
76	REC11-859124	11-859124	TUERCA	NUT	DADO	ÉCROU
77	REC934241	934241	TAPA REFRIGERACIÓN	CAP	COPERCHIO	COUVERCLE
78	REC10-32470	10-32470	TORNILLO	SCREW	VITE	VIS
79	REC331880	17-35973	PASADOR	PIN	SPINOTTO	GOUPILLE
80	REC11-52707Q1	11-52707Q1	KIT CIERRE HÉLICE	PROPELLER NUT KIT	KIT CHIUSSURA ELICHA	KIT ÉCROU D'HÉLICE
81	RECKITMALPHA1AL		KIT ÁNODOS AL	ANODE KIT AL	KIT ANODI AL	KIT ANODES AL
	CMALPHAGEN1KITA		KIT ÁNODOS AL	ANODE KIT AL	KIT ANODI AL	KIT ANODES AL
	CMALPHAGEN1KITM		KIT ÁNODOS MG	ANODE KIT MG	KIT ANODI MG	KIT ANODES MG
	TENKITALPHAONE/1		KIT ÁNODOS ZN	ANODE KIT ZN	KIT ANODI ZN	KIT ANODES ZN
82	CM806105	806105Q1	ÁNODO EJE HÉLICE ZN	PROP SHAFT ANODE ZN	ANODO ELICHA ZN	ANODE EMBASE ZN
	CM806105A	806105Q1	ÁNODO EJE HÉLICE AL	PROP SHAFT ANODE AL	ANODO ELICHA AL	ANODE EMBASE AL

CONTRAROTACIÓN	COUNTER ROTATION	CONTROROTRANTE	CONTRAROTATION
ROTACIÓN ESTÁNDAR	STD ROTATION	ROTAZIONE STD	ROTATION STD

ALPHA ONE GEN II
OD469859-0K999999 (1991-97)

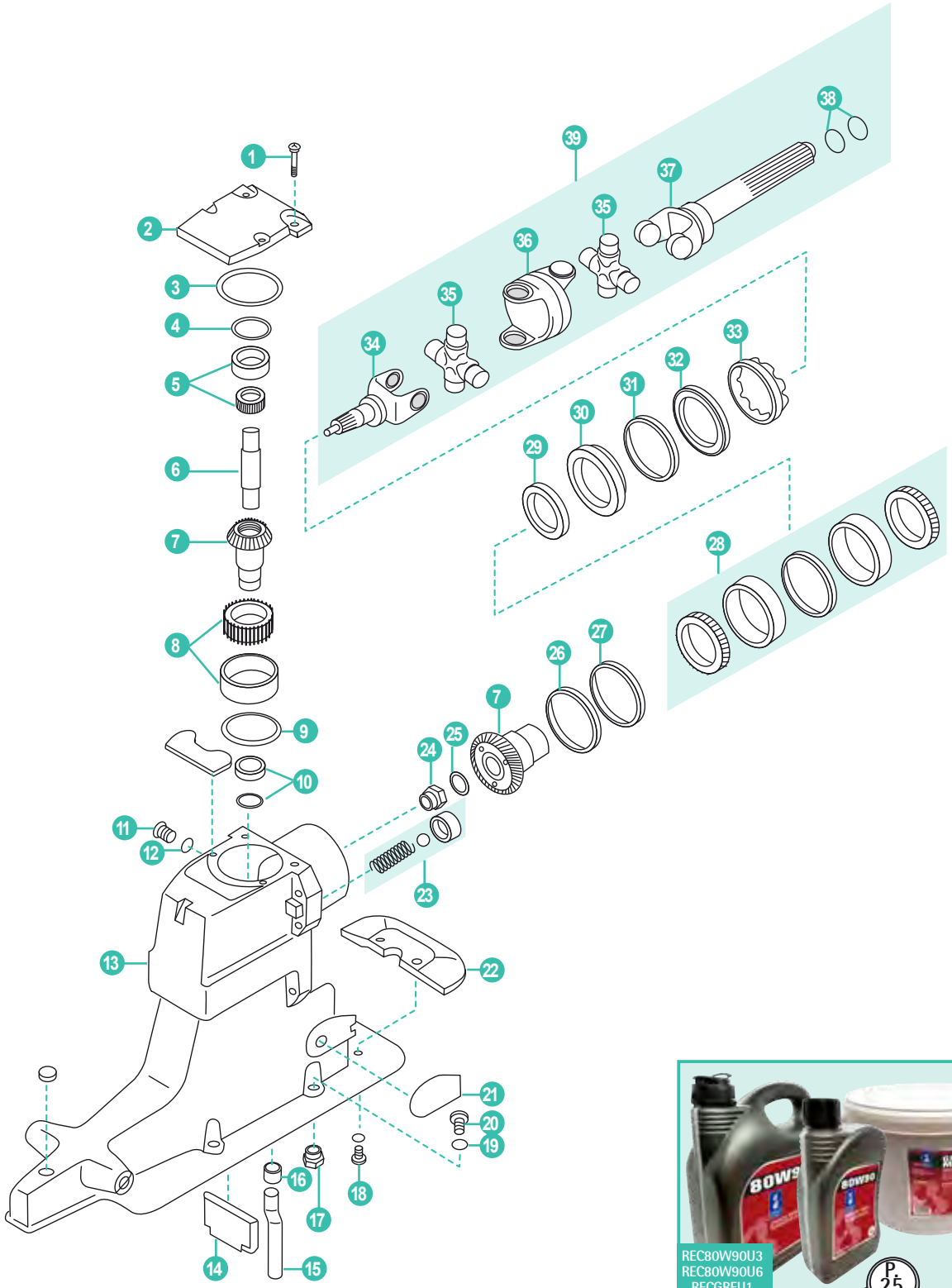

40



REF
REC26-88397A1

41

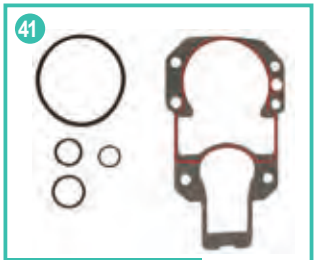

REF
REC27-949960Q2

42



43



REF
REC43-18411A2

	REF	OEM				
1	REC10-98794	10-98794	TORNILLO	SCREW	VITE	VIS
2	REC828692A1	828692A1	TAPA SUPERIOR CON NIVEL DE ACEITE	UPPER CAP WITH OIL LEVEL	COPERCHIO SUPERIORE CON LIVELLO OLIO	KIT CAPOT SUPERIEUR
3	REC25-32546	25-32546	ARO TÓRICO	O-RING	O-RING	JONT TORIQUE
4	REC15-45691A1	15-45691A1	GRUESO (Para rodamiento 21510)	SHIM (For bearing 21510)	SPESSORE (Per cuscinetto 21510)	CALE (pour roulement 21510)
	REC15-32563A1	15-32563A1	GRUESO (Para rodamiento 21511)	SHIM (For bearing 21511)	SPESSORE (Per cuscinetto 21511)	CALE (pour roulement 21511)
5	REC31-61100A1	31-61100A1	RODAMIENTO Ø EXT.49 mm (1991-95)	BEARING Ø EXT. 49 mm (1991-95)	CUSCINETTO Ø EST. 49 mm (1991-95)	ROULEMENT Ø EXT. 49 mm (1991-95)
	REC31-32575T1	31-32575T1	RODAMIENTO Ø EXT.45 mm (-1996)	BEARING Ø EXT. 45 mm (-1996)	CUSCINETTO Ø EST. 45 mm (-1996)	ROULEMENT Ø EXT. 45 mm (-1996)
6	REC45-557961	45-55796-1	EJE PIÑÓN	PINION SHAFT	ASSE PIGNONE	ARBRE PIGNON
7	REC43-18411A2	43-18411A2	KIT PIÑONES (Red.1.50/1.47) (20-22) 1991-97	PINION KIT (Ratio 1.50/1.47) (20-22) 1991-97	KIT PIGNONE (Rid. 1.50/1.47) (20-22) 1991-97	KIT PIGNON (Réd. 1.50/1.47) (20-22) 1991-97
	REC43-45814A5	43-45814A5	KIT PIÑONES (Red 1.65/1.62) (24-24) 1991-97	PINION KIT (Ratio 1.65/1.62) (24-24) 1991-97	KIT PIGNONE (Rid. 1.65/1.62) (24-24) 1991-97	KIT PIGNON (Réd. 1.65/1-62) (24-24) 1991-97
	REC43-75325A3	43-75325A3	KIT PIÑONES (Red 1.84/1.81) (17-19) 1991-97	PINION KIT (Ratio 1.84/1.81) (17-19) 1991-97	KIT PIGNONE (Rid. 1.84/1.81) (17-19) 1991-97	KIT PIGNON (Réd. 1.84/1.81) (17-19) 1991-97
	REC43-55778A3	43-55778A3	KIT PIÑONES (Red 1.98/1.94) (20-24) 1991-97	PINION KIT (Ratio 1.98/1.94) (20-24) 1991-97	KIT PIGNONE (Rid. 1.98/1.94) (20-24) 1991-97	KIT PIGNON (Réd. 1.98/1.94) (20-24) 1991-97
8	REC31-35990A1	31-35990A1	RODAMIENTO (Red 1.65, 1.84, 1.98, 2.40)	BEARING (Ratio 1.65, 1.84, 1.98, 2.40)	CUSCINETTO (Rid. 1.65, 1.84, 1.98, 2.40)	ROULEMENT (Réd. 1.65, 1.84, 1.98, 2.40)
	REC31-32573A1	31-32573A1	RODAMIENTO (Red. 1.47)	BEARING (Ratio 1.47)	CUSCINETTO (Rid.1.47)	ROULEMENT (Réd. 1.47)
9	REC15-36178A02	15-36178A02	SUPLEMENTO	SPACER	DISTANZIALE	CALE
10	REC26-66302	26-66302	RETÉN	SEAL	TENUTA	JOINT
11	REC10-79953Q04	10-79953Q04	TORNILLO COLA	SCREW	VITE	VIS
12	REC12-191833	12-191833	JUNTA	GASKET	GUARNZIONE	JOINT
13	REC1547-815930A7	1547-815930A7	CARCASA	HOUSING	CARCASSA	CARDAN
14	RM815932	815932	SEPARADOR ESCAPE	SPACER EXHAUST	SPAZIATORE SCARICO	CALE ÉCHAPPEMENT
15	REC32-860220	32-860220	TUBO SUBIDA AGUA	WATER UP TUBE	TUBO ASPIRAZIONE ACQUA	DURITE D'EAU
16	REC26-88397	26-88397	TUBO GOMA	RUBBER TUBE	TUBO GOMMA	DURITE CAOUTCHOUC
17	REC11-859135	859135	TUERCA	NUT	DADO	ÉCROU
18	REC10-28668	10-28688	TORNILLO	SCREW	VITE	VIS
19	REC12-45176	12-35935	ARANDELA	WASHER	RONDELLA	RONDELLE
20	REC10-816601	10-816601	TORNILLO	SCREW	VITE	VIS
21	REC8M2015937	8M2015937	TAPA BABOR	PORT CAP	COPERCHIO SINISTRO	COUVERCLE BABOR
	REC8M2015938	8M2015938	TAPA ESTRIBOR	STD CAP	COPERCHIO DESTRO	COUVERCLE TRIBOR
22	CM821629	821629Q1	ANODO ZN	ZN ANODE	ANODO ZN	ANODE ZN
	CM821629A	821629Q1	ANODO AL	ALANODE	ANODO AL	ANODE AL
23	REC24-17997A1	24-17997A1	KIT MUELLE BOLA	SPRING BALL KIT	KIT MOLLA	KIT RESSORT
24	REC11-22339	11-22339	TUERCA	NUT	DADO	ÉCROU
25	REC12-45810	12-45810	ARANDELA	WASHER	RONDELLA	RONDELLE
26	REC15-71013	15-71013	ESPACIADOR	SPACER	DISTANZIALE	CALE
27	REC15-35980A1	15-35980A1	SUPLEMENTO	SPACER	DISTANZIALE	CALE
28	REC31-35988A12	31-35988A12	RODAMIENTO (1991-97)	BEARING (1991-97)	CUSCINETTO (1991-97)	ROULEMENT (1991-97)
29	REC26-823894	26-823894	RETÉN	SEAL	TENUTA	JOINT D'HUILE
30	REC66081A2	66081A2	CUERPO RETÉN CARDAN	HOUSING CARDAN SEAL	PARAOLIO CARDANO	CORPS JOINT DU CARDAN
31	REC25-70937	25-70937	ARO TÓRICO	O-RING	O-RING	JOINT TORIQUE
32	REC35983	35983	ARO	O-RING	O-RING	JOINT TORIQUE
33	REC8168112	8168112	TUERCA PORTA RETÉN	SEAL'S NUT	DADO PORTA TENUTA	ECROU A CRENAUX EMBASE
34	REC46020T02	46020T02	UNIÓN COLA-CARDAN (1991-97)	UNION DRIVE SHAFT-CARDAN (1991-97)	ASSE CARDANO PIEDE (1991-97)	CARDAN (1991-97)
35	REC3850812	75832T1	CRUCETA (1991-95)	JOINT (1991-95)	CROCETTA (1991-95)	CROISILLON CARDAN (1991-95)
	REC805536A2	805536A2	CRUCETA (1996+)	JOINT (1996+)	CROCETTA (1996+)	CROISILLON CARDAN (1996+)
	REC75832T	75832T	CRUCETA CARDÁN (4 en línea y V6) (-1995)	U-JOINT (4 inline & V6) (-1995)	CROCIERA CARDANO (4 in linea e V6) (-1995)	CROISILLON CARDAN (4 en ligne et V6) (-1995)
36	REC393831	393831	CARDAN	CARDAN	CARDAN	CARDAN
37	REC59830A7	59830A7	UNIÓN COLA - MOTOR	UNION DRIVE SHAFT - ENGINE	ASSE CARDANO PIEDE MOTORE	CARDAN EMBASE
38	REC25-25439	25-25439	ARO TORICO	O-RING	O-RING	JOINT TORIQUE
	REC25-35027	25-35027	ARO TÓRICO	O-RING	O-RING	JOINT TORIQUE
39	REC814819A2	814819A2	KIT TRANSMISIÓN (1991-97)	TRANSMITION KIT (1991-97)	KIT TRASMISSIONE (1991-97)	ARBRE TRANSMISSION (1991-97)
	REC864281A2	864281A2	KIT TRANSMISIÓN (1998+)	TRANSMITION KIT (1998+)	KIT TRASMISSIONE (1998+)	ARBRE TRANSMISSION (1998+)
40	REC26-88397A1	26-88397A1	KIT RETENES	GEARCASE SEAL KIT	KIT PARAOLIO	KIT JOINTS
41	REC27-94996Q2	27-94996Q2	KIT RETENES	GEARCASE SEAL KIT	KIT PARAOLIO	KIT JOINTS
42	RECKITMALPHA2AL		KIT ÁNODOS AL	ANODE KIT AL	KIT ANODI AL	KIT ANODES AL
	CMALPHAKITA		KIT ÁNODOS AL	ANODE KIT AL	KIT ANODI AL	KIT ANODES AL
	CMALPHAKITM		KIT ÁNODOS MG	ANODE KIT MG	KIT ANODI MG	KIT ANODES MG
	TENKITALPHAONE/2		KIT ÁNODOS ZN	ANODE KIT ZN	KIT ANODI ZN	KIT ANODES ZN
43	REC43-18411A2	43-18411A4	KIT PIÑONES Y COJINETE Reforzados 20/22 (Red. 1.50) Para V8.	DRIVE SHAFT HOUSING GEAR SET Heavy duty 20/22 (ratio 1.50) for V8	KIT PIGNONI E CUSCINETTI RINFORZATI 20/22 Denti (Rid. 1.50) Per V8	KIT PIGNONS ET ROULEMENTS Renforcé 20/22 (Réd. 1.50) Pour V8.

ALPHA ONE GEN II
OL100040+ (1998+)

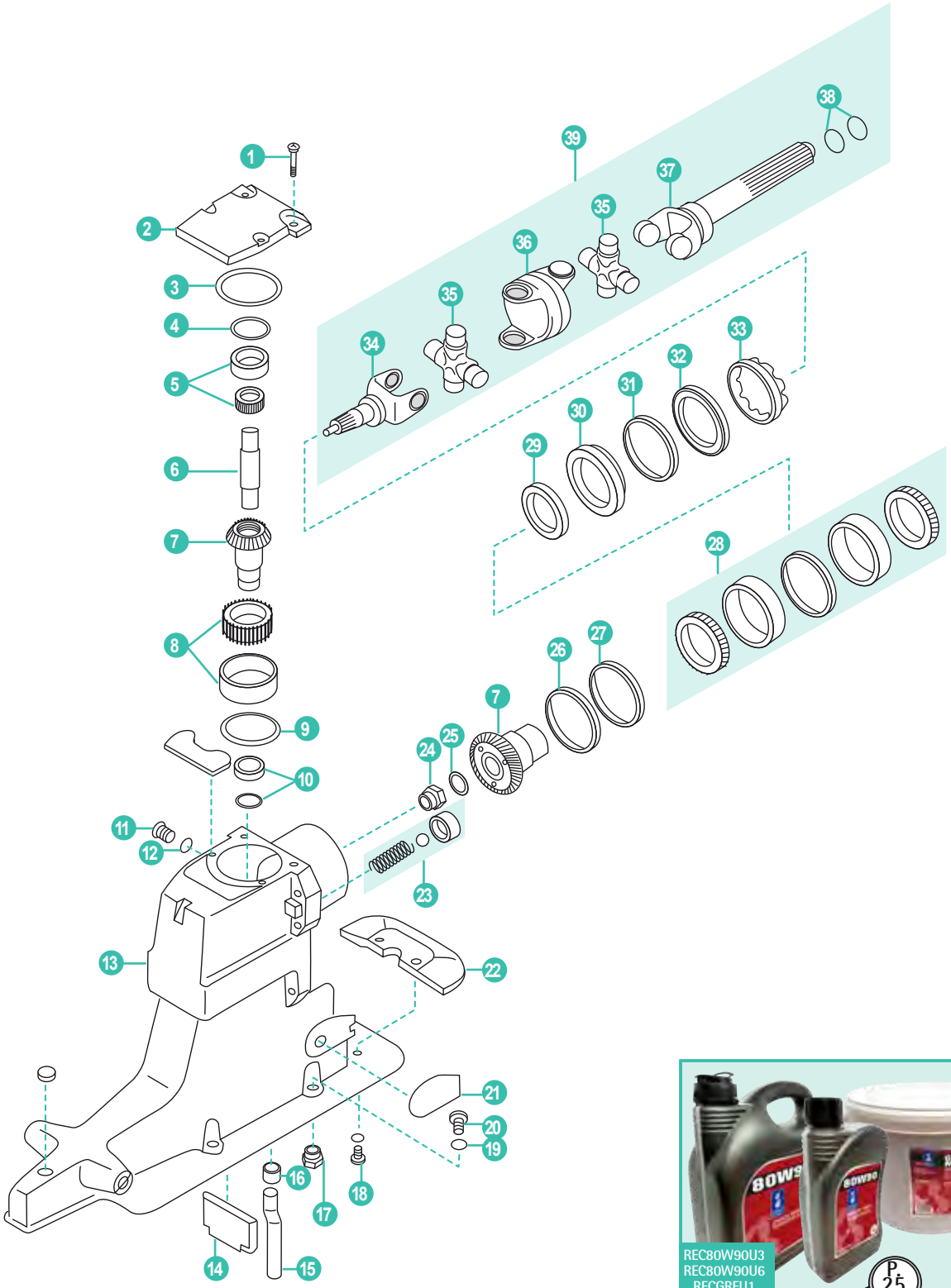

40

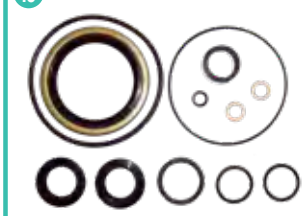

REF
REC26-88397A1

41

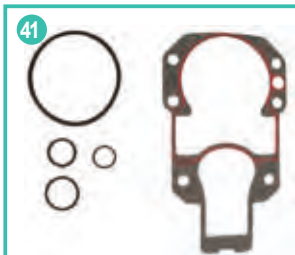

REF
REC27-94996Q2

42



43



REF
REC864281A2

	REF	OEM				
1	REC10-98794	10-98794	TORNILLO	SCREW	VITE	VIS
2	REC828692A1	828692A1	TAPA SUPERIOR	COVER ASSEMBLY	COPERCHIO	COUVERCLE
3	REC25-32546	25-32546	ARO	O-RING	ANELLO	BAGUE
4	REC15-32563A1	15-32563A1	SUPLEMENTO (Cojinete 21511)	SHIM (FOR 21511 bearing)	ESPESORE (cuscinetto 21511)	CALE (roulement 21511)
5	REC31-32575T1	31-32575T1	COJINETE (O.D. 1-25/32)	BEARING ASSY (O.D. 1-25/32)	CUSCINETTO (O.D. 1-25/32)	ROULEMENT (O.D. 1-25/32)
6	REC45-557961	45-557961	EJE	DRIVE SHAFT	ASSE	ARBRE
7	REC43-853641A2	43-853641A2	KIT PIÑONES (Red. 1.47) (20-22)	GEAR SET (1.47 RATIO) (20-22)	KIT PIGNONE (Rid. 1.47) (20-22)	KIT PIGNON (Réd. 1.47) (20-22)
	REC43-853640A2	43-853640A2	KIT PIÑONES (Red. 2.00/1.62) (24-24)	GEAR SET (2.00/1.62 RATIO) (24-24)	KIT PIGNONE (Rid. 2.00/1.62) (24-24)	KIT PIGNON (Réd. 2.00/1-62) (24-24)
	REC43-853643A2	43-853643A2	KIT PIÑONES (Red. 1.81) (17-19)	GEAR SET (1.81 RATIO) (17-19)	KIT PIGNONE (Rid. 1.81) (17-19)	KIT PIGNON (Réd. 1.81) (17-19)
	REC43-853642A2	43-853642A2	KIT PIÑONES (Red. 2.40/1.94) (20-24)	GEAR SET (2.40/1.94 RATIO) (20-24)	KIT PIGNONE (Rid. 2.40/1.94) (20-24)	KIT PIGNON (Réd. 2.40/1.94) (20-24)
8	REC31-35990A1	31-35990A1	COJINETE (Red. 1.62, 1.81, 1.94, 2.00, 2.40)	ROLLER BEARING (1.62, 1.81, 1.94, 2.00, 2.40 RATIO)	CUSCINETTO (Rid. 1.62, 1.81, 1.94, 2.00, 2.40)	KIT PIGNON (Réd. 1.61, 1.81, 1.94, 2.00, 2.40)
	REC31-32573A1	31-32573A1	COJINETE (Red. 1.47)	ROLLER BEARING (1.47 RATIO)	CUSCINETTO (Rid. 1.47)	ROULEMENT (Réd. 1.47)
9	REC15-36178A02	15-36178A02	SUPLEMENTO	SHIM	SPESSORE	CALE
10	REC26-66302	26-66302	RETÉN (-0M400411)	OIL SEAL (-0M400411)	PARAOLIO (-0M400411)	JOINT D'HUILE (-0M400411))
	REC26-864319	26-864319	RETÉN (0M400412+)	OIL SEAL (0M400412+)	PARAOLIO (0M400412+)	JOINT D'HUILE (0M400412+)
11	REC10-79953Q04	10-79953Q04	KIT TORNILLOS	SCREW KIT	KIT VITE	KIT VIS
12	REC12-191833	12-191833	ARANDELA	WASHER	RONDELLA	RONDELLA
13	REC1547-815930A7	1547-815930A7	CARCASA	HOUSING	CARCASSA	CARDAN
14	RM815932	815932	SEPARADOR ESCAPE	FILLER WALL	SEPARATORE	CALE ÉCHAPPEMENT
15	REC32-860220	32-860220	TUBO GUÍA	GUIDE TUBE	TUBO GUIDA	TUBO GUIDE
16	REC26-88397	26-88397	GRUESO	GROMMET	SPESSORE	CALE
17	REC11-859135	11-859135	TUERCA	LOCKNUT	DADO	ÉCROU
18	REC10-28668	10-28668	TORNILLO	SCREW	VITE	VIS
19	REC12-45176	12-35935	ARANDELA	WASHER	RONDELLA	RONDELLE
20	REC10-816601	10-816601	TORNILLO	BOLT	VITE	VIS
21	REC8M2015937	8M2015937	GRUESO BABOR	WEAR PAD - PORT	SPESSORE BABORDO	CALE BABORD
	REC8M2015938	8M2015938	GRUESO ESTRIBOR	WEAR PAD - STARBOARD	SPESSORE TRIBORDO	CALE TRIBORD
22	CM821629	821629Q1	ANODO ZN	ZN ANODE	ANODO ZN	ANODE ZN
	CM821629A	821629Q1	ANODO AL	AL ANODE	ANODO AL	ANODE AL
23	REC24-17997A1	24-17997A1	KIT BOLA ENGRASE	SPRINT KIT	KIT BOLLA ENGRASSATORE	VALVE BY-PASS
24	REC11-22339	11-22339	TUERCA	NUT	DADO	ÉCROU
25	REC12-45810	12-45810	ARANDELA	WASHER	RONDELLA	RONDELLE
26	REC15-71013	15-71013	ESPACIADOR	SPACER	DISTANZIALE	CALE
27	REC15-35980A1	15-35980A1	SUPLEMENTO	SHIM	SPESSORE	SUPPLEMENT
28	RM31-30894A5	31-30894A5	KIT COJINETE	BEARING KIT	KIT CUSCINETTO	KIT ROULEMENT
29	REC26-823894	26-823894	RETÉN ACEITE	OIL SEAL	PARAOLIO	JOINT D'HUILE
30	REC66081A2	66081A2	CUERPO RETÉN CARDAN	HOUSING CARDAN SEAL	PARAOLIO CARDANO	CORPS JOINT DU CARDAN
31	REC25-70937	25-70937	ARO TÓRICO	O-RING	O-RING	JOINT TORIQUE
32	REC35983	35983	ARO	O-RING	O-RING	JOINT TORIQUE
33	REC8168112	8168112	RETENEDOR	RETAINER	TENUTA	JOINT D'HUILE
34	REC853635	853635	UNIÓN COLA CARDÁN (-0M400411)	YOKE (-0M400411)	UNIONE PIEDE -CARDAN (-0M400411)	CARDAN (-0M400411)
	REC864282T	864282T	UNIÓN COLA CARDÁN (0M4004112+)	YOKE (0M4004112+)	UNIONE PIEDE - CARDAN (0M400412+)	CARDAN (0M400412+)
35	REC805536A2	805536A2	CRUCETA CARDAN (-0M400411)	U-JOINT (-0M400411)	CROCETTA (-0M400411)	CROISILLON CARDAN (-0M400411)
	REC865496A02	865496A02	CRUCETA CARDAN (0M400412+)	U-JOINT (0M400412+)	CROCETTA (0M400412+)	CROISILLON CARDAN (0M400412+)
36	REC393831	393831	CARDAN (-0M400411)	SOCKET (-0M400411)	CARDAN (-0M400411)	CARDAN (-0M400411)
	REC865503T	865503T	CARDAN (0M400412+)	SOCKET FROM (0M4004112+) (GKN)	CARDAN (0M400412+)	CARDAN (0M400412+)
37	REC59830A7	59830A7	UNIÓN COLA (-0M400411)	YOKE ASSY. (-0M400411)	UNIONE PIEDE (-0M400411)	CARDAN (-0M400411)
	REC864281A2	865491A01 864281A01	UNIÓN COLA (0M400412+)	YOKE ASSY. (0M400412+) (GKN)	UNIONE PIEDE (0M400412+)	CARDAN (0M400412+)
38	REC25-25439	25-25439	ARO	O-RING	ANELLO	JOINT TORIQUE
	REC25-35027	25-35027	ARO	O-RING	ANELLO	JOINT TORIQUE
39	REC814819A7	814819A7	KIT TRANSMISIÓN (Gris)	U-JOINT ASSEMBLY (Grey)	KIT TRASMISSIONE (Grigio)	ARBRE TRANSMISSION (jaune)
	REC864281A2	86481A2	KIT TRANSMISIÓN GKN (Negro) (0L100009+)	U-JOINT ASSEMBLY GKN (BLACK) (0L100009+)	KIT TRASMISSIONE GKN (NERO) (0L100009+)	ARBRE TRANSMISSION (noir) (0L100009+)
40	REC26-88397A1	26-88397A1	KIT RETENES	GEARCASE SEAL KIT	KIT PARAOLIO	KIT JOINTS
41	REC27-94996Q2	27-94996Q2	KIT RETENES	GEARCASE SEAL KIT	KIT PARAOLIO	KIT JOINTS
42	RECKITMALPHA2AL		KIT ÁNODOS AL	ANODE KIT AL	KIT ANODI AL	KIT ANODES AL
	CMALPHAKITA		KIT ÁNODOS AL	ANODE KIT AL	KIT ANODI AL	KIT ANODES AL
	CMALPHAKITM		KIT ÁNODOS MG	ANODE KIT MG	KIT ANODI MG	KIT ANODES MG
	TENKITALPHAONE/2		KIT ÁNODOS ZN	ANODE KIT ZN	KIT ANODI ZN	KIT ANODES ZN
43	REC864281A2	864281A2	KIT TRANSMISION GNK (negro)	YOKE ASSEMBLY GNK (black)	GIUNTO CARDANICO GNK (nero)	CARDAN COMPLET (noir)

ALPHA ONE GEN II STD & COUNTER ROTATION

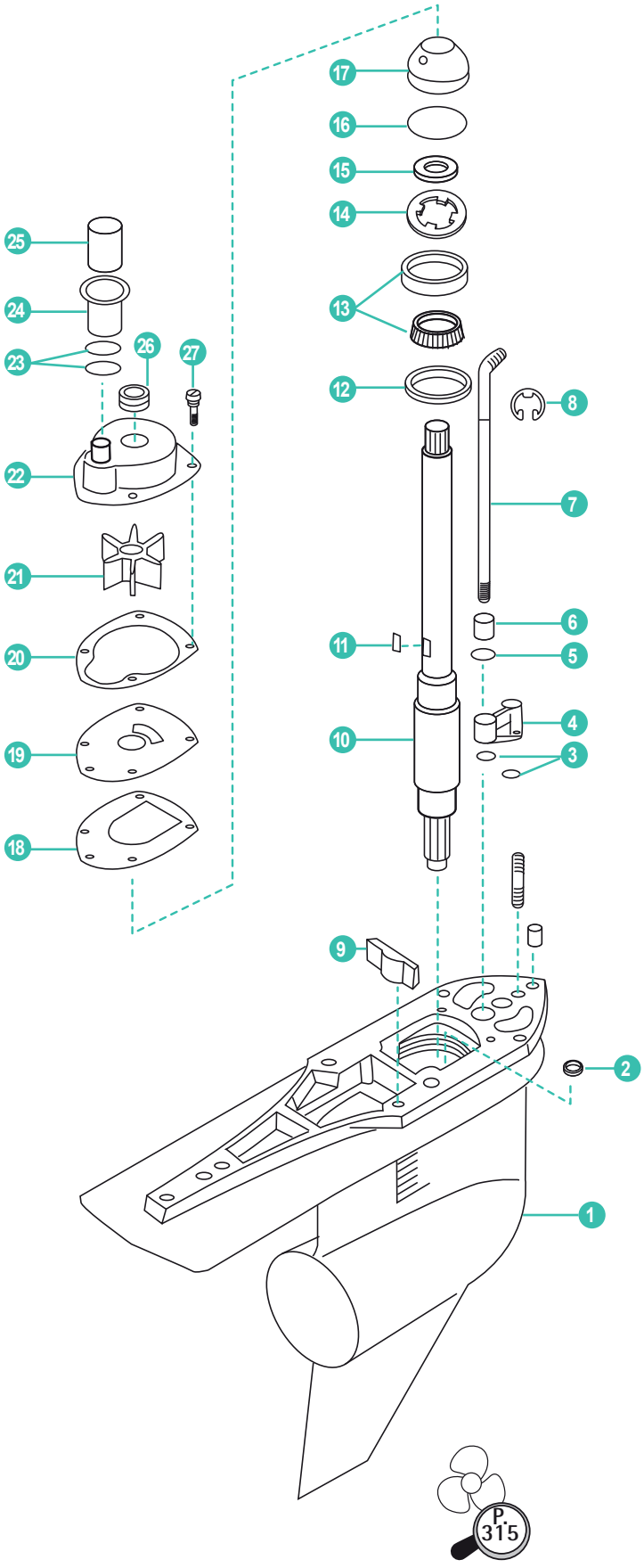

28



REF
REC26-816575A3

29



REF
RM23-815921A17

	REF	OEM				
1	REC1623-815822A30	1623-815822A30	CARCASA COLA (OD469859-999999)	HOUSING (OD469859-999999)	CARCASSA (OD469859-999999)	CARDAN (OD469859-999999)
2	REC26-455771	26-45577-1	RETÉN	SEAL	TENUTA	JOINT D'HUILE
3	REC25-36318	25-36318	ARO TÓRICO	O-RING	ANELLO	JOINT TORIQUE
4	REC23-815921A21	23-815921A21	CASQUILLO	SHIFT BUSHING	BOCCOLA	INSERT D'AXE
5	REC26-8164641	26-816464-1	RETÉN ACEITE	OIL SEAL	PARAOLIO	JOINT D'HUILE
6	REC23-67370	23-67370	LEVA	CAM	BOCCOLA	CAM
7	REC815919A1	815919A1	EJE CAMBIO	DRIVE SHAFT	ASSE	ARBRE CHANGEMENT
8	REC53-29641	53-29641	CIERRE	CIRCLIP	CIRCLIP	CLIPS
9	REC821526001	861526001	RETÉN DE GOMA	RUBBER SEAL	PARAOLIO IN GOMMA	JOINT CAOUTCHOUC
10	REC45-816919	45-816919	EJE TRANSMISIÓN (-999999)	SHAFT (-999999)	ASSE (-999999)	ARBRE TRANSMISSION (-999999)
	REC45-853648	45-853648	EJE TRANSMISIÓN (0L100040+)	SHAFT (0L100040+)	ASSE (0L100040+)	ARBRE TRANSMISSION (0L100040+)
11	REC28-8M0032833	28-8M0032833	CHAVETA	CLIP	CHIAVE	CLAVETTE
12	REC15-42637A1	15-42637A1	GRUESO	SHIM	SPESSORE	CALE
13	REC31-36387A1	31-36387A1	RODAMIENTO	BEARING	CUSCINETTO	ROULEMENT
	REC31-33138A1	31-33138A1	RODAMIENTO (1998+)	BEARING (1998+)	CUSCINETTO (1998+)	ROULEMENT (1998+)
14	REC8245191	8245191	RETENEDOR	SEAL	TENUTA	JOINT D'HUILE
15	REC26-66302	26-66302	RETÉN ACEITE (-0M400411)	OIL SEAL (-0M400411)	PARAOLIO (-0M400411)	JOINT D'HUILE (-0M400411)
	REC26-864319	26-864319	RETÉN ACEITE (0M400411+)	OIL SEAL (0M400411+)	PARAOLIO (0M400411+)	JOINT D'HUILE (0M400411+)
16	REC25-90011	25-90011	ARO TÓRICO	O-RING	ANELLO	JOINT TORIQUE
17	REC807929A1	807929A1	PORTA RETÉN (1991+)	SEAL BASE (1991+)	BASE TENUTA (1991+)	BASE DE POMPE A EAU (1991+)
18	REC27-430331	27-430331	JUNTA	GASKEET	GUARNIZIONE	JOINT
19	REC8172761	8172761	TAPA BOMBA AGUA	PUMP CAP	COPERCHIO POMPA	COUVERCLE POMPE
20	REC27-8172771	27-8172771	JUNTA	GASKET	GUARNIZIONE	JOINT
21	REC47-43026Q02	47-43026Q02	IMPULSOR	IMPELLER	GIRANTE	TURBINE
22	RM817275A1	817275A1	TAPA BOMBA AGUA	CAP WATER PUMP	COPERCHIO POMPA ACQUA	COUVERCLE POMPE
23	REC25-21836	25-21836	ARO TÓRICO	O-RING	FASCE	JOINT TORIQUE
24	REC816597A1	816597A1	TUBO AGUA	TUBE	TUBO	DURITE À EAU
25	REC23-816583	23-816583	TUBO	TUBE	TUBO	TUYAU
26	REC26-816575A2	26-816575A2	RETÉN GOMA	SEAL	TENUTA	JOINT CAOUTCHOUC
27	REC10-816928	10-816928	TORNILLO	BOLT	VITE	VIS
28	REC26-816575A3	26-816575A3	KIT REPARACIÓN	REPAIR KIT	KIT RIPARAZIONE	KIT JOINT
29	RM23-815921A17	23-815921A17	CASQUILLO CORREDERA	BUSHING	GHIERA SCORREVOLE	BUSHING



REC80W90U3
REC80W90U6
RECGREU1
RECGREU12

P. 25

ALPHA ONE GEN II STD & COUNTER ROTATION

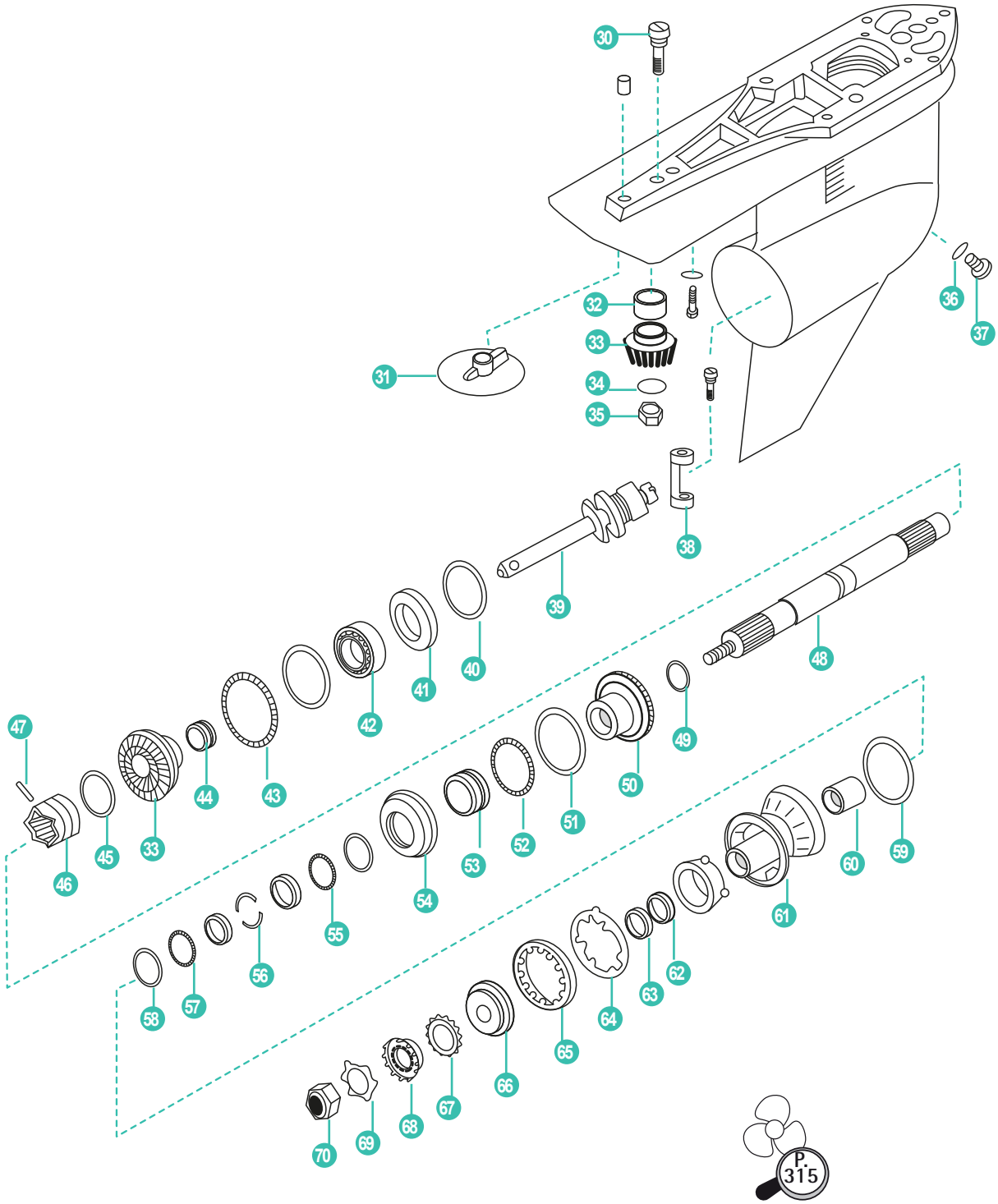

71



REF
REC11-52707Q1

72



73



74



REF
REC43-878087A2

	REF	OEM				
30	REC10-806327	10-806327	TORNILLO	BOLT	VITE	VIS
31	CM762145	76214Q5	ÁNODO ZN	ANODE ZN	ANODO ZN	ANODE ZN
	CM762145A	76214Q5	ÁNODO AL	ANODE ALU	ANODO AL	ANODE AL
32	REC387817	31-42647A1	RODAMIENTO	BEARING	CUSCINETTO	ROULEMENT
33	REC43-878087A2	43-878087A2	KIT PIÑONES (1996+) 13:21 1.47, 1.62, 1.81, 1.94 Ratio 3.265 OD Avante	PINION SET(1996) 13:21 1.47, 1.62, 1.81, 1.94 Ratio 3.265 OD Forward bearing	KIT PIGNONE (1996) 13:21 1.47, 1.62, 1.81, 1.94 Rapporto 3.265 OD Avanti	KIT PIGNON (1996) 13:21 1.47, 1.62, 1.81, 1.94 Réd. 3.265 OD avant
	REC43-878617A2	43-853592A2	KIT PIÑONES (1998+) 2.00:1 / 2.40:1 3.265 OD Avante	PINION SET (1998+) 2.00:1 / 2.40:1 3.265 OD Forward bearing	KIT PIGNONE (1998+) 2.00:1 / 2.40:1 3.265 OD Avanti	KIT PIGNON (1998+) 2.00:1 / 2.40:1 3.265 OD avant
34	REC350038	12-92721	JUNTA	GASKET	GUARNIZIONE	JOINT
35	REC11-35921	11-35921	TUERCA	NUT	DADO	ÉCROU
36	REC12-191833	12-191833	JUNTA TAPÓN	CAP GASKET	GUARNIZIONE TAPPO	JOINT BOUCHON
37	REC22-67892A05	8M0058389	TAPÓN	CAP	TAPPO	BOUCHON
38	REC76865	76865	HORQUILLA CAMBIO	CLIP	CLIP	FOURCHETTE
39	REC818349T1	818349T1	EJE DESPLAZABLE	SHAFT	ASSE	SELECTEUR D'INVERSEUR
40	REC15-47397A1	15-47397A1	GRUESO (1991-95)	SHIM (1991-95)	SPESSORE (1991-95)	CALE (199-95)
	REC15-44491A1	15-44491A1	GRUESO (1996+)	SHIM (1996+)	SPESSORE (1996+)	CALE (1996+)
	REC31-828437A2	31-828437A2	COJINETE Ø 44,45-88,9 mm	BEARING Ø 44,45-88,9 mm	CUSCINETTO Ø44,45-88,9 mm	ROULEMENT Ø44,45-88,9 mm
	REC31-35928T1	31-35928T1	COJINETE Ø 47,62-88,9 mm	BEARING Ø 47,62-88,9 mm	CUSCINETTO Ø 47,62-88,9 mm	ROULEMENT Ø 47,62-88,9 mm
41	REC31-30894A1	31-30894A1	COJINETE Ø 44,45-82,93 mm	BEARING Ø 44,45-82,93 mm	CUSCINETTO Ø 44,45-82,93 mm	ROULEMENT Ø 44,45-82,93 mm
	REC31-828439A2	31-828439A2	COJINETE Ø 47,62-82,93 mm	BEARING Ø 47,62-82,93 mm	CUSCINETTO Ø 47,62-82,93 mm	ROULEMENT Ø 47,62-82,93 mm
	REC828830A2	828830A2	COJINETE ADAPTADOR	BEARING ADAPTOR ASSY	CUSCINETTO ADATTATORE	ADAPTATEUR POUR ROULEMENT
42	REC31-814653T	31-814653	COJINETE	BEARING CARRIER	CUSCINETTO	ROULEMENT
43		31-815480	COJINETE ALPHA (1996+)	BEARING ALPHA (1996+)	CUSCINETTO ALPHA (1996+)	ROULEMENT ALPHA (1996+)
44	REC31-30895T	31-30895T	RODAMIENTO STD	BEARING STD	CUSCINETTO STD	ROULEMENT STD
	REC31-15844	31-15844	RODAMIENTO	BEARING	CUSCINETTO	ROULEMENT
45	REC24-30893	24-30893	MUELLE	SPRING	MOLLA	RESSORT
46	REC52-853594T	52-853594T	SELECTOR	GEAR	PIGNONE	CRABOT
47	REC17-8M0084681	8M0020941	PASADOR	PIN	SPINOTTO	GOUPILLE
48	REC44-824110	44-824110	EJE HÉLICE (1991-97) (-999999)	SHAFT PROPELLER (1991-97) (-999999)	ASSE ELICA (1991-97) (-999999)	ARBRE HÉLICE (91-97) (-999999)
	REC44-850308	44-850308	EJE HÉLICE (1998+) (OL100040+)	SHAFT PROPELLER (1998+) (OL100040+)	ASSE ELICA (1991-97) (OL100040+)	ARBRE HÉLICE (1991-97) (OL100040+)
	REC44-8146061	814606 1	EJE (1991-95)	PROPSHAFT (1991-95)	ASSE (1991-95)	ARBRE (1991-95)
49	REC23-824108	23-824108	SUPLEMENTO	SHIM	SPESSORE	CALE
50	REC43-828073A1	43-828073A1	PIÑÓN MARCHA ATRÁS	GEAR REVERSE	PIGNONE MARCIA INDIETRO	PIGNON MARCHE ARRIÈRE
51	REC681001	681001	ARO	RING	ANELLO	BAGUE
52	REC30-88957T	30-88957T1	RODAMIENTO	BEARING	CUSCINETTO	ROULEMEN
53	REC31-814653T	31-814653	ARANDELA	WASHER	RONDELLA	RONDELLE
54	REC814604T1	814604A1	RODAMIENTO	BEARING	CUSCINETTO	ROULEMENT
55	REC31-15842	31-15842	COJINETE RODILLOS	NEEDLE BEARING	CUSCINETTO	ROULEMENT
56	REC814605	814605	CIERRE	KEEPERS PROPSHAFT	CHIUSURA	CLIP
57	REC31-15842	31-15842	COJINETE RODILLOS	NEEDLE BEARING	CUSCINETTO	ROULEMENT
58	REC12-18448	12-18448	ARANDELA CIERRE	WASHER CLOSURE	RONDELLA CHIUSURA	RONDELLA
59	REC25-31534	25-31534	ARO TÓRICO	O-RING	FASCE	JOINT TORIQUE
60	REC387247	31-30956T	RODAMIENTO	BEARING	CUSCINETTO	ROULEMENT
61	REC818763A10	818763A10	COJINETE COLA STD	BEARING STD	CUSCINETTO STD	ROULEMENT
	REC14587A7	14587A5	COJINETE (1991-95)	BEARING CARRIER (1991-95)	CUSCINETTO(1991-95)	ROULEMENT (1991-95)
62	REC26-76868	26-14077	RETÉN ACEITE Interior	OIL SEAL Inside	PARAOLIO interno	JOINT D'HUILE intérieur
63	REC26-12224	26-12224	RETÉN ACEITE Extrior	OIL SEAL Outside	PARAOLIO esterno	JOINT D'HUILE extérieur
64	REC14-18323	14-18323	TAPA	CAP	COPERCHIO	COUVERCLE
65	REC8M2011027	8M2011027	TUERCA	NUT	DADO	ÉCROU
66	REC12-835467Q01	12-835467Q01	SEPARADOR	SPACER	DISTANZIALE	CALE
67	REC13-423511	13-423511	CIERRE	CLIP	CHIUSURA	CLIPS
68	REC12-31211Q03	12-31211A2	TOPE CIERRE HÉLICE	END CLIP	TAPPO CHIUSURA ELICA	RONDELLE FREIN DE DIABOLO
69	REC90508-ZW1-003	14-816629Q	CIERRE	CLIP	CHIUSURA	RONDELLE FREIN
70	REC90301-ZW1-003	11-827614	TUERCA	NUT	DADO	ÉCROU
71	REC11-52707Q1	11-52707Q1	KIT CIERRE HÉLICE	PROPELLER NUT KIT	KIT CHIUSSURA ELICA	KIT ÉCROU D'HÉLICE
72	RECKITMALPHA2AL		KIT ÁNODOS AL	ANODE KIT AL	KIT ANODI AL	KIT ANODES AL
	CMALPHAKITA		KIT ÁNODOS AL	ANODE KIT AL	KIT ANODI AL	KIT ANODES AL
	CMALPHAKITM		KIT ÁNODOS MG	ANODE KIT MG	KIT ANODI MG	KIT ANODES MG
	TENKITALPHAONE/2		KIT ÁNODOS ZN	ANODE KIT ZN	KIT ANODI ZN	KIT ANODES ZN
73	CM806105	806105Q1	ÁNODO EJE HÉLICE ZN	PROP SHAFT ANODE ZN	ANODO ASSE ELICA ZN	ANODE ARBRE HÉLICE ZN
	CM806105A	806105Q1	ÁNODO EJE HÉLICE AL	PROP SHAFT ANODE AL	ANODO ASSE ELICA AL	ANODE ARBRE HÉLICE AL
74	REC43-878087A2	43-878087A2	KIT PIÑON RODAMIENTO (13:21) INCLUYE RODAMIENTO REC31-30894A1 (1996+)	PINION AND FORWARD GEAR SET. INCLUDES FORWARD BEARING REC31-30894A1 (1996+)	KIT PIGNONI (13:21) INCLUDE CUSCINETTO REC31-30894A1 (1996+)	KIT PIGNONE ROULEMENT (13:21) COMPRIS LE ROULEMENT REC31-3089A1 (1996+)

CONTRAROTACIÓN	COUNTER ROTATION	CONTROROTRANTE	CONTRAROTATION
ROTACIÓN ESTÁNDAR	STD ROTATION	ROTAZIONE STD	ROTATION STD

BRAVO

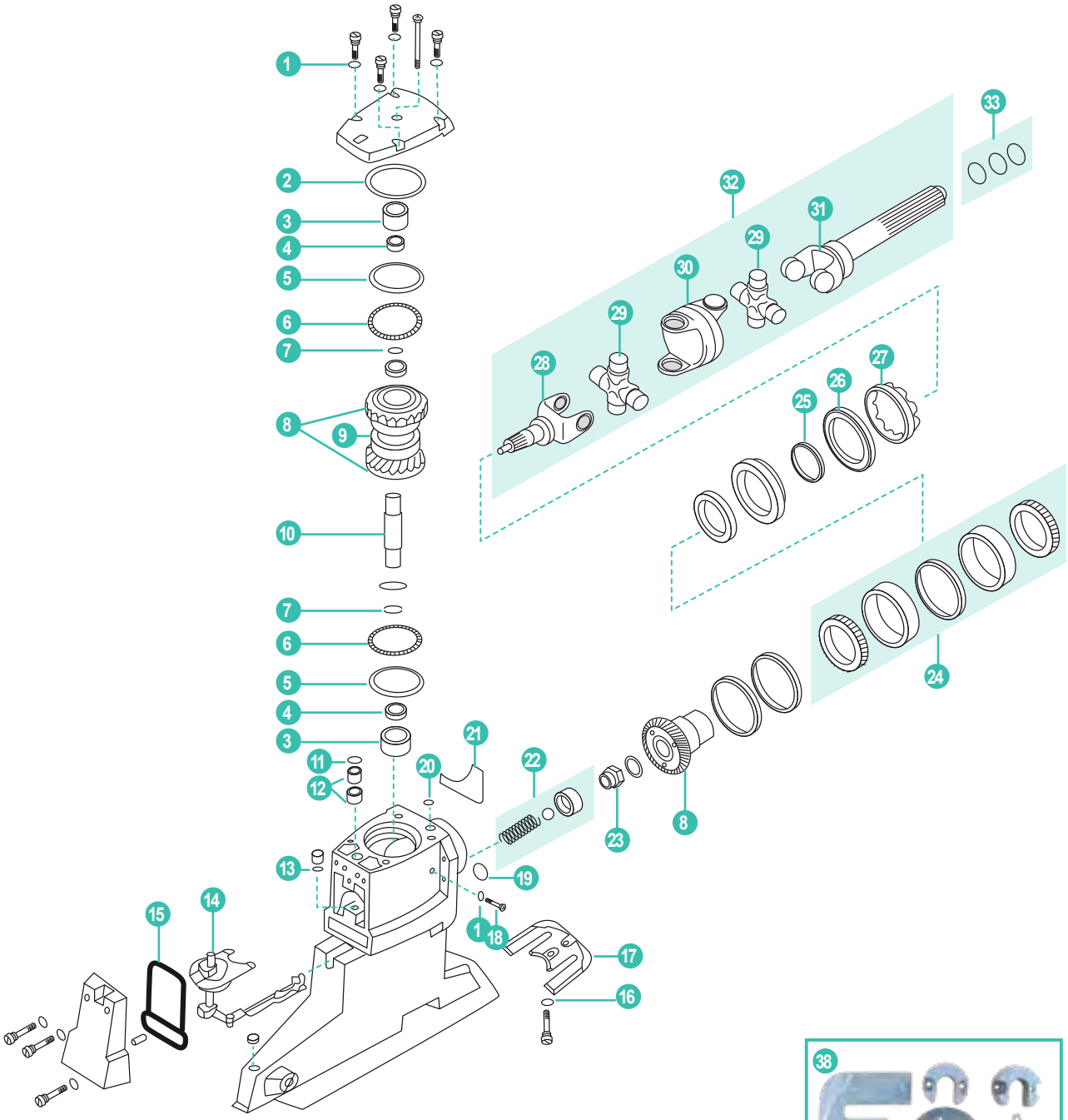

38



REF
RECKITMBRAVO1AL

34



REF
REC23-861209A1

35

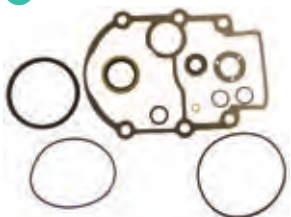

REF
REC87580

36



REF
REC26-16709A2

37



REF
REC16755Q1

	REF	OEM				
1	REC12-191833	12-191833	JUNTA	GASKET	GUARNIZIONE	JOINT
2	REC25-97387	25-97387	ARO TÓRICO	O-RING	ANELLO	JOINT TORIQUE
3	REC31-815900	31-815900	COJINETE	BEARING	CUSCINETTO	ROULEMENT
4	REC31-87156	31-87156	COJINETE	BEARING	CUSCINETTO	ROULEMENT
	RM23-87560091	23-87560091	GRUESO .091 rojo	SHIM .091 red	SPESSORE .091 rosso	CALE .091 rouge
5	RM23-87560094	23-87560094	GRUESO .094 azul	SHIM .094 blue	SPESSORE .094 blu	CALE .094 bleu
	RM23-87560097	23-87560097	GRUESO .097 verd	SHIM .097 green	SPESSORE .097 verde	CALE .097 verd
6	REC31-86771	31-86771	COJINETE	BEARING	CUSCINETTO	ROULEMENT
7	RM97351	97351	RETENEDOR	RETAINER	TENUTA	JOINT D'HUILE
	RM43-887906A1	43-887906A1	KIT PIÑONES (29/27) BRAVO I. 1.36:1 BRAVO II. 1.50:1 & 1.81:1 BRAVQ III.1.36:1 & 1.81:1	BEARING KIT (29/27) BRAVO I. 1.36:1 BRAVO II. 1.50:1 & 1.81:1 BRAVO III.1.36:1 & 1.81:1	KIT PIGNONE (29/27) BRAVO I. 1.36:1 BRAVO II. 1.50:1 & 1.81:1 BRAVO III.1.36:1 & 1.81:1	KIT PIGNONE (29/27) BRAVO I. 1.36:1 BRAVO II. 1.50:1 & 1.81:1 BRAVO III.1.36:1 & 1.81:1
8	RM43-887903A1	43-887903A1	KIT PIÑONES (32/27) BRAVO I. 1.50:1 BRAVO II. 1.65:1 & 2.00:1 BRAVQ III. 1.65:1 & 2.00:1	BEARING KIT (32/27) BRAVO I. 1.50:1 BRAVO II. 1.65:1 & 2.00:1 BRAVO III. 1.65:1 & 2.00:1	KIT PIGNONE (32/27) BRAVO I. 1.50:1 BRAVO II. 1.65:1 & 2.00:1 BRAVO III. 1.65:1 & 2.00:1	KIT PIGNONE (32/27) BRAVO I. 1.50:1 BRAVO II. 1.65:1 & 2.00:1 BRAVO III. 1.65:1 & 2.00:1
	RM43-887909A1	43-887909A1	KIT PIÑONES (30/23) BRAVO I. 1.65:1 BRAVO II. 2.20:1 BRAVO III. 2.20:1 & 2.43:1	BEARING KIT (30/23) BRAVO I. 1.65:1 BRAVO II. 2.20:1 BRAVO III. 2.20:1 & 2.43:1	KIT PIGNONE (30/23) BRAVO I. 1.65:1 BRAVO II. 2.20:1 BRAVO III. 2.20:1 & 2.43:1	KIT PIGNONE (30/23) BRAVO I. 1.65:1 BRAVO II. 2.20:1 BRAVO III. 2.20:1 & 2.43:1
9	RM52-865344A01	52-865344A01	CURSOR	CLUTCH	CURSORE	CONE D'EMBRAYAGE
10	RM45-812773T	45-812773	EJE TRANSMISIÓN	DRIVE SHAFT	ASSE	ARBRE TRANSMISSION
11	REC25-62705	25-62705	ARO TÓRICO	O-RING	ANELLO	JOINT TORIQUE
12	REC23-861209A1	23-861209A1	RETÉN	RETAINER	TENUTA	JOINT D'HUILE
13	REC26-12709	26-127091	RETÉN ACEITE	OIL SEAL	PARAOLIO	JOINT D'HUILE
14	REC12711	12711	EJE SELECTOR	SHAFT	ASSE SELETTORE	ARBRE SUPERIEUR
15	REC12708	12708	RETÉN	RETAINER	TENUTA	JOINT
16	REC13-35048	13-35048	ARANDELA	WASHER	RONDELLA	RONDELLE
17	CM821630	821630Q1	ÁNODO ZN	ANODE ZN	ANODO ZN	ANODE ZN
	CM821630A	821630Q1	ÁNODO AL	ANODE AL	ANODO AL	ANODE AL
18	REC22-67892A05	8M0058389	TORNILLO	SCREW	VITE	VIS
19	REC25-457101	25-457101	ARO TÓRICO (1.424 x 103)	O-RING (1.424 x 103)	ANELLO (1.424 x 103)	JOINT TORIQUE (1.424 x 103)
20	REC25-62706	25-62706	ARO TÓRICO (.426 x 0.70)	O-RING (.426 x 0.70)	ANELLO (.426 x 0.70)	JOINT TORIQUE (.426 x 0.70)
21	REC86310	16755Q1	RETÉN	RETAINER	TENUTA	JOINT D'HUILE
22	REC24-17997A1	24-17997A1	JUEGO MUELLE	SPRING SET	KIT MOLLA	KIT RESSORT
23	REC11-22339	11-22339	TUERCA	NUT	DADO	ÉCROU
24	REC31-86763A2	31-86763A2	RODAMIENTO (- 0M198372)	BEARING (-0M198372)	CUSCINETTO (-0M198372)	ROULEMENT (-0M198372)
	RM31-86763A04	31-86763A04	RODAMIENTO (0M198373+)	BEARING (0M198373+)	CUSCINETTO (-0M198373+)	ROULEMENT (-0M198373+)
25	REC26-807006	26-807006	RETÉN ACEITE Ø 2.254"	OIL SEAL Ø 2.254"	PARAOLIO Ø 2.254"	OINT D'HUILE Ø 2.254"
	REC26-43993	26-43993	RETÉN ACEITE Ø 2.132"	OIL SEAL Ø 2.132"	PARAOLIO Ø 2.132"	OINT D'HUILE Ø 2.132"
26	REC86779A1	86779A1	PORTA RETÉN	RING	ANELLO	BAGUE PORTE JOINT SPI
27	RM11-92004	11-92004	TUERCA	NUT	DADO	ÉCROU
28	REC12784	12784	UNIÓN COLA-CARDAN (0M111207-)	YOKE (0M111207-)	ASSE PIEDE-CARDANO (0M111207-)	CARDAN (0M111207-)
	REC3850812	75832	CRUCETA	U-JOINT	CROCETTA	CROISILLON POUR EMBASE
29	RM866136A01	866136A01	CRUCETA (0M750175+) GKN	U-JOINT (0M750175+) GNK	CROCETTA (0M750175+) GNK	CROISILLON (0M750175+) GNK
	REC862132T	862132T	CRUCETA BRAVO X, XR, XZ	U-JOINT BRAVO X, XR, XZ	CROCETTA BRAVO X, XR, XZ	CROISILLON BRAVO X, XR, XZ
	REC865496A02	865496A01	CRUCETA BRAVO (0M111208+)	U-JOINT BRAVO (0M111208+)	CROCETTA BRAVO (0M111208+)	CROISILLON BRAVO (0M111208+)
30	REC393831	393831	CARDÁN (-0M111207)	SOCKET (-0M111207)	CARDANO (-0M111207)	CARDAN (-0M111207)
31	REC59830A7	814819A3	UNIÓN COLA MOTOR	YOKE ASSY	ASSE PIEDE	CARDAN
32	REC864244A2	864244A2	KIT TRANSMISIÓN BRAVO (0B664190+) (1985-05)	U-JOINT ASSEMBLY BRAVO (0B664190+) (1985-05)	KIT TRASMISSIONE BRAVO (0B664190+) (1985-05)	KIT TRASMISSION BRAVO (0B664190+) (1985-05)
	RM865425A03	865425A03	KIT TRANSMISIÓN COLAS BRAVO X, XR, XZ	U-JOINT ASSEMBLY BRAVO X, XR, XZ	KIT TRASMISSIONE BRAVO X, XR, XZ	KIT TRASMISSION BRAVO X, XR, XZ
33	REC25-29845	25-29845	ARO TÓRICO (.924 x 1.03)	O-RING (.924 x 1.03)	ANELLO (.924 x 1.03)	JOINT TORIQUE (.924 x 1.03)
	REC25-35027	25-35027	ARO TÓRICO (1.046)	O-RING (1.046)	ANELLO (1.046)	JOINT TORIQUE (1.046)
34	REC23-861209A1	23-861209A1	KIT RETENES	SHIFT SHAFT BUSING	KIT TENUTES	KIT JOINTS
35	REC87580		KIT REPARACIÓN TR, TRS	GEARCASE SEAL KIT TR, TRS	KIT RIPARAZIONE TR, TRS	KIT JOINTS TR, TRS
36	REC26-16709A2	26-16709A2	KIT REPARACIÓN BRAVO I, II, III	GEARCASE SEAL KIT BRAVO I, II, III	KIT RIPARAZIONE BRAVO I, II, III	KIT JOINTS BRAVO I, II, III
37	REC16755Q1	16755Q1	KIT RETENES	GEARCASE SEAL KIT	KIT TENUTE	KIT JOINTS
38	RECKITMBRAVO1AL		KIT ÁNODOS AL	ANODE KIT AL	KIT ANODI AL	KIT ANODES AL

BRAVO I

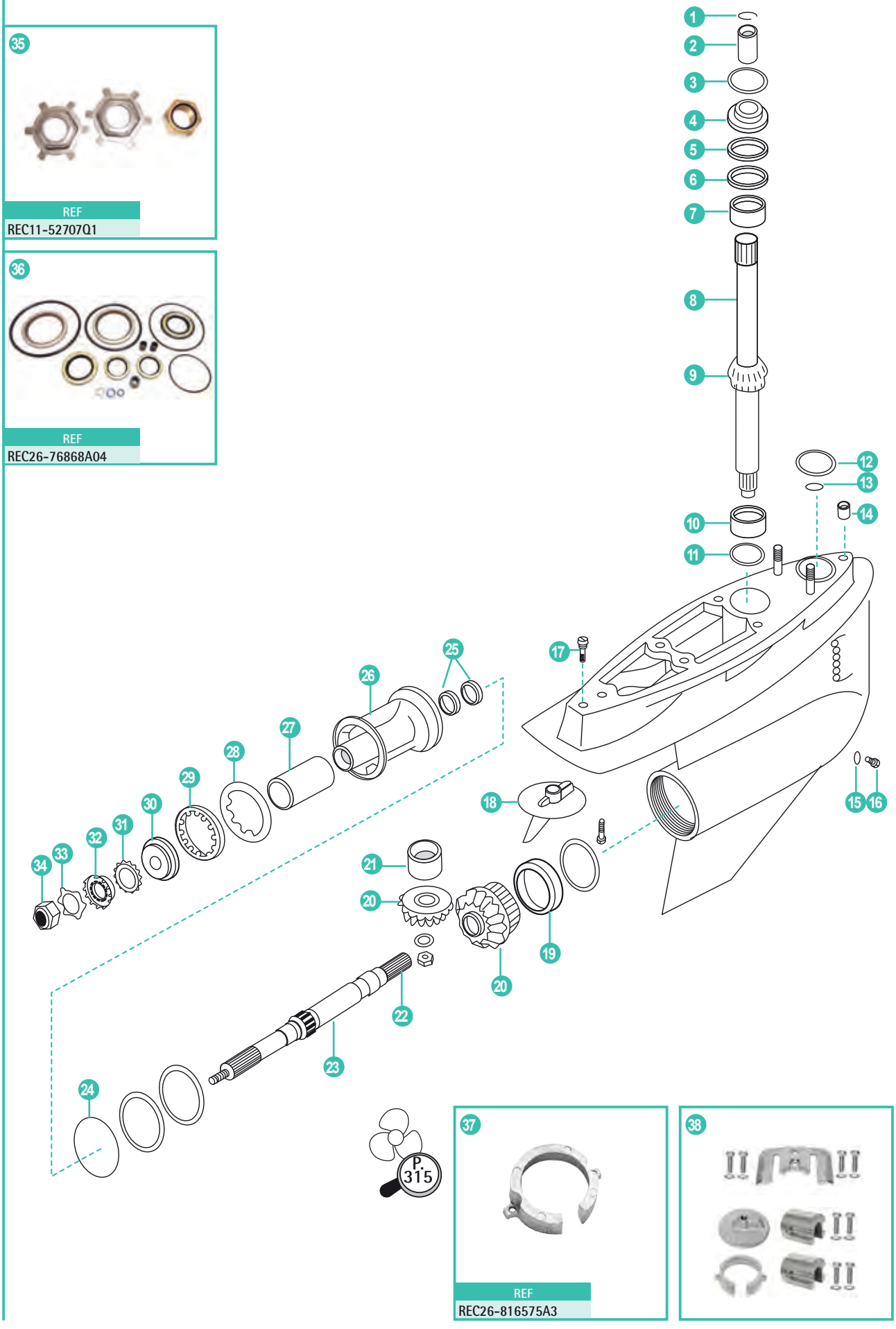
35
REF
REC11-52707Q1
36
REF
REC26-76868A04
1
2
3
4
5
6
7
8
9
10
11
12
13
14
15
16
17
18
19
20
21
22
23
24
25
26
27
28
29
30
31
32
33
34
P. 315
37
REF
REC26-816575A3
38

	REF	OEM				
	RM1656-8866A17	8866A64	CARCASA COLA (1656-8863CZ)	LOWER CASE (1656-8863CZ)	CARCASSA PIEDE (1656-8863CZ)	CARTER PIED (1656-8863CZ)
1	REC53-88242	53-88242	CLIP	CLIP	CLIP	CLIPS
2	REC88243A3	88243A3	ACOPLE	COUPLING ASSEMBLY	ASSE ACCOPPIAMENTO	
3	REC308627	25-20826	ARO TÓRICO	O-RING	ANELLO	JOINT TORIQUE
4	REC23-8M8000506	23-92916	ESPACIADOR	SPACER	DISTANZIALE	CALE
5	REC15-86749A1	15-86749A1	KIT SUPLEMENTOS	SHIM KIT	KIT SPESSORE	KIT CALES
6	RM86739	14-86739	ARANDELA	WASHER	RONDELLA	RONDELLE
7	REC31-86748A1	31-86748A1	COJINETE	BEARING	CUSCINETTO	ROULEMENT
8	RM45-41629A2	41629A2	EJE TRANSMISIÓN	DRIVESHAFT	ASSE TRASMISSIONE	ARBRE TRANSMISSION
9	REC31-86748A1	31-86748A1	COJINETE	BEARING	CUSCINETTO	ROULEMENT
10	REC31-66668A1	66668A1 31-99328A1	COJINETE	BEARING	CUSCINETTO	ROULEMENT
11	REC15-92914A1	15-92914A1	KIT GRUESOS	SHIM KIT	KIT SPESSORE	KIT CALES
12	REC26-455771	26-455771	RETÉN	SEAL	TENUTA	JOINT D'HUILE
13	REC25-33465	25-33465 25-822370	ARO TÓRICO (2.362 x .103)	O-RING (2.362 x .103)	ANELLO (2.362 x .103)	JOINT TORIQUE (2.362 X .103)
14	REC26-36556	26-36556	TUBO AGUA Ø EXT. 12.7 mm	WATER TUBE Ø EXT. 12.7mm	TUBO ACQUA Ø EXT. 12.7 mm	DURITE Ø EXT. 12.7 mm
	REC26-805344	26-805344	TUBO AGUA Ø EXT. 15.88 mm	WATER TUBE Ø EXT. 15.88 mm	TUBO ACQUA Ø EXT. 15.88 mm	DURITE Ø EXT. 15.88 mm
15	REC12-191833	12-191833	JUNTA	GASKET	GUARNIZIONE	JOINT
16	REC22-67892A05	8M0058389	TORNILLO DRENAJE	DRAIN PLUG	VITE DRENAGGIO	VIS VIDANGE
17	REC10-806327	10-806327	TORNILLO	SCREW	VITE	VIS
18	CM762145	76214Q5	ÁNODO ZN	ZN ANODE	ANODO ZN	ANODE ZN
	CM762145A	76514Q5	ÁNODO AL	AL ANODE	ANODO AL	ANODE AL
19	REC31-86752A1	31-86752A1	COJINETE	BEARING	CUSCINETTO	ROULEMENT
20	RM43-14063A1	43-14063A1	KIT PIÑONES (15/19)	BEARING SET (15/19)	KIT CUSCINETTO (15/19)	KIT PIGNON (15/19)
21	REC31-86754T	31-86754T	COJINETE	BEARING	CUSCINETTO	ROULEMENT
22	RM44-41630T	44-850308 44-41630T	EJE HÉLICE	PROPSHAFT	ASSE ELICA	ARBRE HÉLICE
23	REC31-66668A1	66668A1 31-99328A1	COJINETE	BEARING	CUSCINETTO	ROULEMENT
24	REC25-31534	25-31534	ARO TÓRICO	O-RING	ANELLO	JOINT TORIQUE
25	REC26-76868	26-76868	RETÉN ACEITE	OIL SEAL	PARAOLIO	JOINT D'HUILE
26	REC41641A8	41641A8	COJINETE COLA	BEARING	CUSCINETTO	ROULEMENT EMBASE
27	REC31-54042T	31-54042T	COJINETE	BEARING	CUSCINETTO	ROULEMENT
28	REC14-18323	14-18323	ARANDELA	WASHER	RONDELLA	RONDELLE
29	REC8M2011027	8M2011027	TUERCA	NUT	DADO	ÉCROU
30	REC12-835467Q01	12-835467Q01	TOPE HÉLICE	SEPARATOR	FERMO PER ELICA	RONDELLE D'HÉLICE
31	REC13-423511	13-42351-1	CIERRE	LOCK	CHIUSURA	RONDELLE FREIN
32	REC12-31211Q03	12-31211Q03	TOPE CIERRE HÉLICE	WASHER	TAPPO CHIUSURA ELICA	RONDELLE FREIN DE DIABOLO
33	REC90508-ZW1-003	14-816629Q	ARANDELA CIERRE	LOCK WASHER	RONDELLA CHIUSURA	RONDELLE FREIN
34	REC90301-ZW1-003	11-827614	TUERCA CIERRE HÉLICE	LOCK NUT	DADO CHIUSURA	ECROU
35	REC11-52707Q1	11-52707Q1	KIT CIERRE HÉLICE	PROPELLER NUT KIT	KIT CHIUSSURA ELICHA	KIT ÉCROU D'HÉLICE
36	REC26-76868A04	26-76868A04	KIT REPARACIÓN BRAVO I, II, III	GEARCASE SEAL KIT BRAVO I, II, III	KIT RIPARAZIONE BRAVO I, II, III	KIT JOINTS BRAVO I, II, III
37	CM806188		ÁNODO ZN	ANODE ZN	ANODO ZN	ANODE ZN
	CM806188A		ÁNODO AL	ANODE AL	ANODO AL	ANODE AL
38	RECKITMBRAVO1AL		KIT ÁNODOS AL	ANODE KIT AL	KIT ANODI AL	KIT ANODES AL
	CMBRAVO1KITA		KIT ÁNODOS AL	ANODE KIT AL	KIT ANODI AL	KIT ANODES AL
	CMBRAVO1KITM		KIT ÁNODOS MG	ANODE KIT MG	KIT ANODI MG	KIT ANODES MG
	TENKITBRAVOI		KIT ÁNODOS ZN	ANODE KIT ZN	KIT ANODI ZN	KIT ANODES ZN



BRAVO II

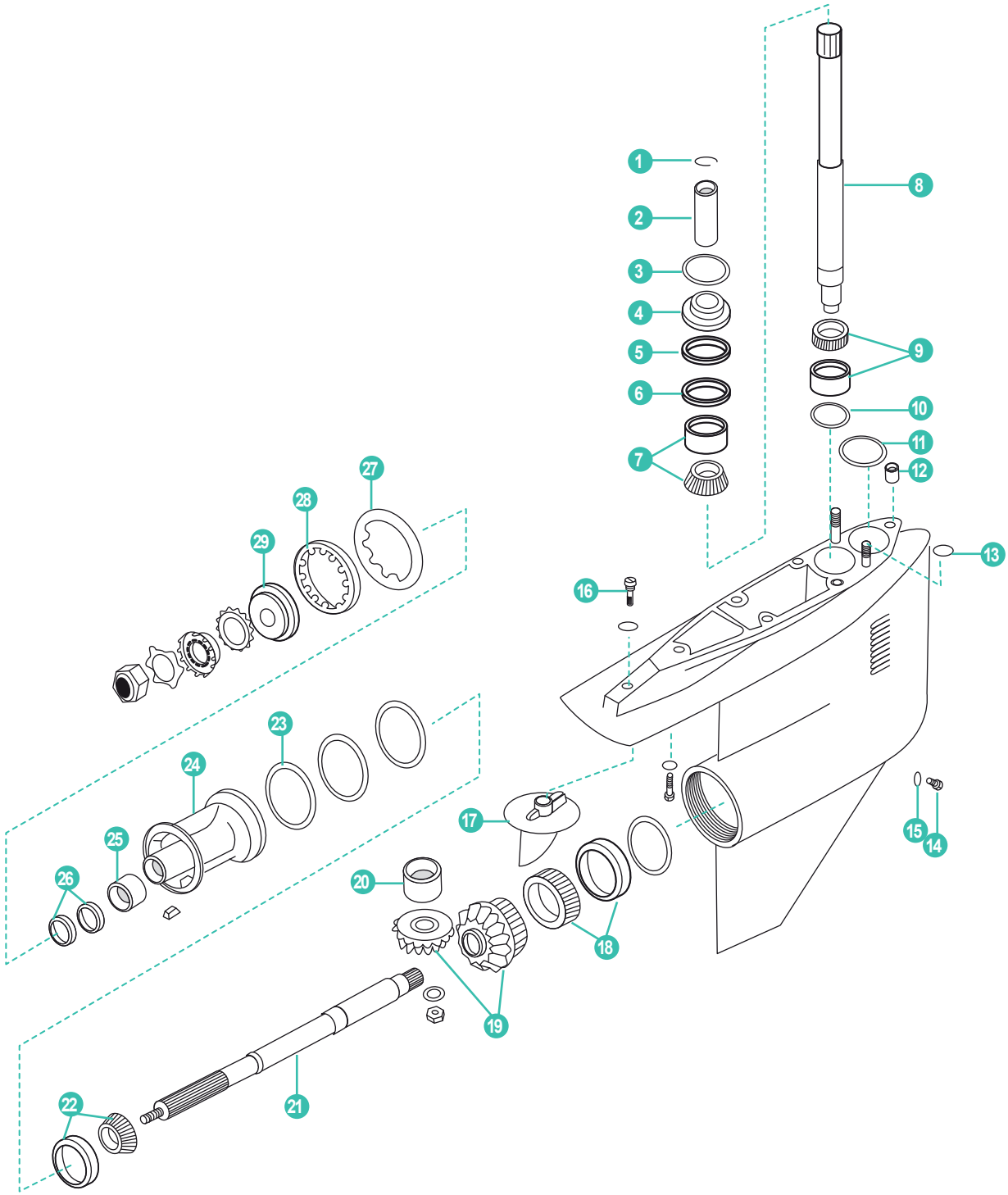

P. 315

30



REF
REC26-76868A04

31



32



	REF	OEM				
1	REC53-88242	53-88242	CLIP	CLIP	CLIP	CLIPS
2	REC88243A3	88243A3	ACOPLE	COUPLING ASSEMBLY	ACCOPPIAMENTO	ACCOUPLEMENT
3	REC308627	25-20826	ARO TÓRICO	O-RING	ANELLO	JOINT TORIQUE
4	REC23-8M8000506	92916	ESPACIADOR	SPACER	DISTANZIALE	CALE
5	REC15-86749A1	15-86749A1	KIT GRUESOS	SHIM KIT	KIT SPESSORE	KIT CALES
6	RM86739	14-86739	ARANDELA	WASHER	RONDELLA	RONDELLE
7	REC31-86748A1	31-86748A1	COJINETE	BEARING	CUSCINETTO	ROULEMENT
8	RM45-41629A2	45-41629A2	EJE	DRIVESHAFT	ASSE	ARBRE
9	REC31-66668A1	31-66668A1	COJINETE	BEARING	CUSCINETTO	ROULEMENT
10	REC15-92914A1	15-92914A1	KIT GRUESOS	SHIM KIT	KIT SPESSORE	KIT CALES
11	REC25-33465	25-822370	ARO	O-RING	ANELLO	JOINT TORIQUE
12	REC26-805344	26-805344	RETÉN AGUA Ø15.88 mm	SPEEDOMETER SEA Ø15.88 mm	TENUTA ACQUA Ø15.88 mm	TUBE D'EAU Ø16 mm
	REC26-36556	26-36556	RETÉN AGUA Ø 12.7 mm	SPEEDO GROMMET Ø 12.7 mm	TENUTA ACQUA Ø 12.7 mm	TUBE D'EAU Ø12,7 mm
13	REC26-455771	26-455771	RETÉN	SEAL	PARAOLIO	JOINT D'HUILE
14	REC22-67892A05	22-67892	TORNILLO CON RETÉN CIERRE	DRAINING SCREW SET	VITE CON PARAOLIO CHIUSURA	BOUCHON DE VIDANGE MAGNETIQUE + JOINT
15	REC12-191833	12-191833	JUNTA	GASKET	GUARNIZIONE	JOINT
16	REC10-806327	10-806327	TORNILLO ANODO	ANODE SCREW	VITE ANODO	VIS ANODE
17	CM762144	76214A2	ÁNODO ZN	ANODE ZN	ANODO ZN	ANODE ZN
	CM762144A	76214A2	ÁNODO AL	ANODE AL	ANODO AL	ANODE ZN
18	REC31-86752A1	31-86752A1	COJINETE	BEARING	CUSCINETTO	ROULEMENT
19	RM43-14063A1	43-14063A1	KIT PIÑONES (15/19)	GEAR SET (15/19)	KIT PIGNONI (15/19)	KIT PIGNON (15/19)
20	REC31-86754T	31-86754T	COJINETE	BEARING	CUSCINETTO	ROULEMENT
21	RM44-41630T	44-41630T	EJE HÉLICE	PROP SHAFT	ASSE ELICA	ARBRE HÉLICE
22	REC31-66668A1	31-66668A1	COJINETE	BEARING	CUSCINETTO	ROULEMENT
23	REC25-31534	25-31534	TÓRICA	O-RING	TENUTA	JOINT TORIQUE
24	REC41641A8	41641A8	COJINETE COLA	BEARING CARRIER	CUSCINETTO PIEDE	ROULEMENT DIABOLO
25	REC31-54042T	31-54042T	COJINETE	BEARING	CUSCINETTO	ROULEMENT
26	REC26-76868	26-76868	RETÉN	SEAL	PARAOLIO	JOINT D'HUILE
27	REC14-18323	14-18323	ARANDELA	LOCK WASHER	RONDELLA	RONDELLE
28	REC8M2011027	79448	TUERCA CIERRE COLA	LOCK NUT	RONDELLA CHIUSURA PIEDE	ECROU A CRENAUX
29	REC12-835467Q01	13171	TOPE HELICE	SEPARATOR	FERMO PER ELICA	RONDELLE D'HÉLICE
30	REC26-76868A04	26-76868A04	KIT REPARACIÓN BRAVO I, II, III	GEARCASE SEAL KIT BRAVO I, II, III	KIT RIPARAZIONE BRAVO I, II, III	KIT JOINTS BRAVO I, II, III
31	CM806188		ÁNODO ZN	ANODE ZN	ANODO ZN	ANODE ZN
	CM806188A		ÁNODO AL	ANODE AL	ANODO AL	ANODE AL
32	RECKITMBRAVO23AL		KIT ÁNODOS AL	ANODE KIT AL	KIT ANODI AL	KIT ANODES AL
	CMBRAVO2Y3KITA		KIT ÁNODOS AL	ANODE KIT AL	KIT ANODI AL	KIT ANODES AL
	CMBRAVO2Y3KITM		KIT ÁNODOS MG	ANODE KIT MG	KIT ANODI MG	KIT ANODES MG
	TENKITBRAVOII-III		KIT ÁNODOS ZN	ANODE KIT ZN	KIT ANODI ZN	KIT ANODES ZN



REC80W90U3
REC80W90U6
RECGREU1
RECGREU12

P. 25

BRAVO III

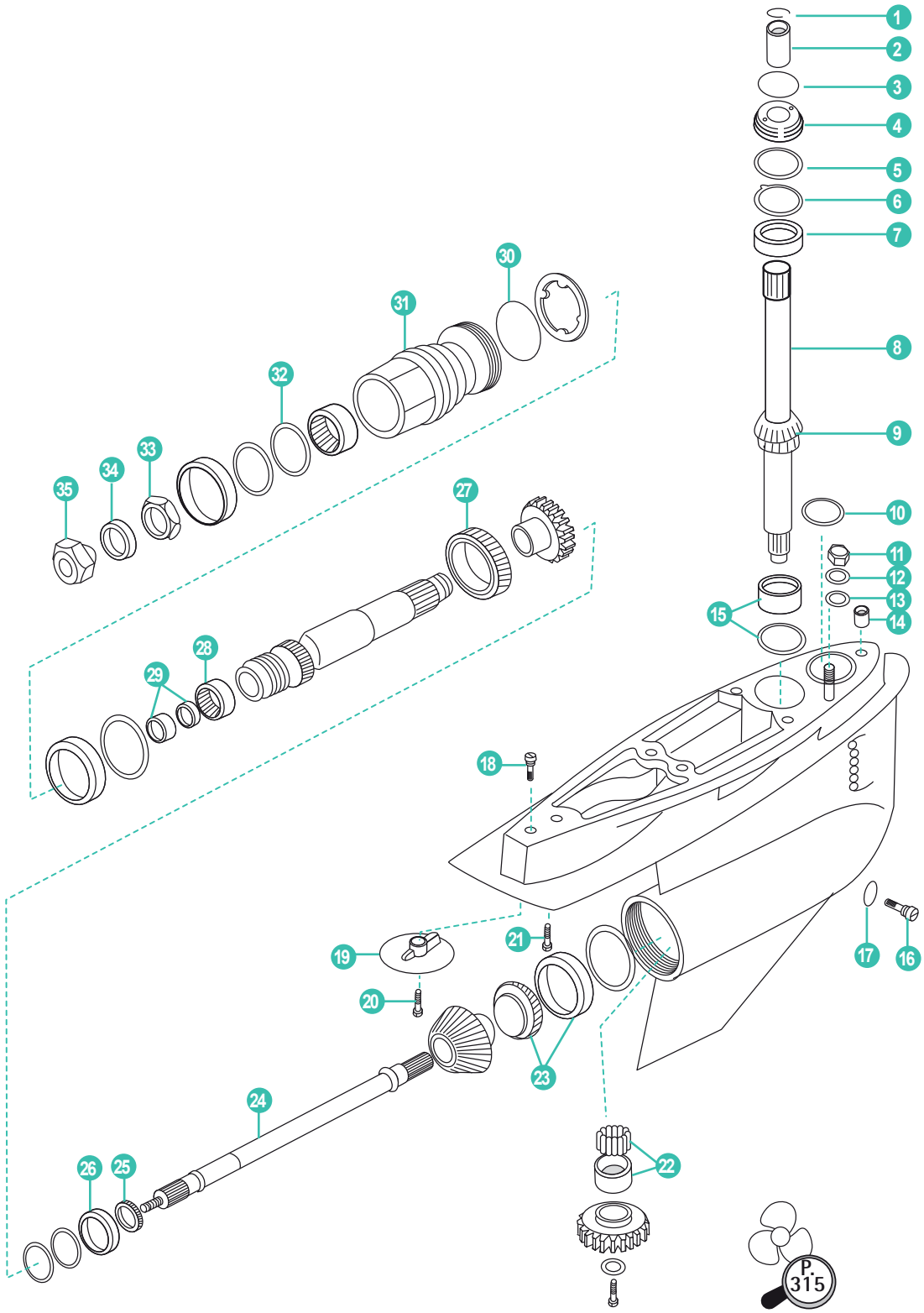

34



REF
REC26-76868A04

35



36



37



	REF	OEM				
1	REC53-88242	53-88242	RETÉN	SEAL	TENUTA	JOINT D'HUILE
2	REC88243A3	88243A3	ACOPLE	COUPLING	ACCOPPIAMENTO	ACCOUPLEMENT
3	REC308627	25-20826	ARO TÓRICO	O-RING	ANELLO	JOIN TORIQUE
4	REC23-8M8000506	23-92916	ESPACIADOR	SPACER	DISTANZIALE	CALE
5	REC15-86749A1	15-86749A1	KIT SUPLEMENTOS	SHIM KIT	SPESSORE KIT	KIT CALES
6	RM86739	86739	ARANDELA	WASHER	RONDELLA	RONDELLE
7	REC31-86748A1	31-86748A1	COJINETE	BEARING	CUSCINETTO	ROULEMENT
8	RM45-41629A2	805370A1	EJE (16.085 largo)	DRIVESHAFT (16.085 long)	ASSE (16.085 lungo)	ARBRE (16.085 large)
9	REC31-86748A1	31-86748A1	COJINETE	BEARING	CUSCINETTO	ROULEMENT
10	REC25-33465	25-33465	ARO TÓRICO	O-RING	ANELLO	JOINT TORIQUE
11	REC11-34933	11-859116	TUERCA	NUT	DADO	ÉCROU
12	REC12-45176	12-45176	ARANDELA	WASHER	RONDELLA	RONDELLE
13	REC26-455771	26-45577-1	RETÉN	SEAL	TENUTA	JOINT SPI
14	REC26-805344	26-805344	RETÉN	SEAL	TENUTA	JOINT SPI
15	REC31-66668A1	31-99328A1	COJINETE	BEARING	CUSCINETTO	ROULEMENT
16	REC22-67892A05	22-8M0058389	TORNILLO CON RETÉN	DRAININ SCREW SET	VITE CON TENUTA	VIS AVEC JOINT
17	REC12-191833	12-19183-3	JUNTA	GASKET	GUARNIZIONE	JOINT
18	REC10-806327	10-806327	TORNILLO	SCREW	VITE	VIS
19	CM762144	76214Q5	ÁNODO	ANODE	ANODO	ANODE
	CM762144A	76214Q5	ÁNODO ALDESIGN II	AL ANODE DESIGN II	ANODO AL DESIGN II	ANODE AL DESIGN II
20	REC313715	10-865321	TORNILLO	SCREW	VITE	VIS
21	REC10-816601	10-816601	TORNILLO	SCREW	VITE	VIS
22	RM86754T	86754T	COJINETE	BEARING	CUSCINETTO	ROULEMENT
23	REC31-86752A1	31-86752A1	COJINETE	BEARING	CUSCINETTO	ROULEMENT
24	RM44-865322T	44-865322T	EJE	SHAFT	ASSE	ARBRE
25	RM805322	805322	COJINETE	BEARING	CUSCINETTO	ROULEMENT
26	REC805100	805100	SEPARADOR	THRUST WASHER	SEPARATORE	RONDELLE DE BUTEE
27	RM805182A1	805182A1	COJINETE	BEARING	CUSCINETTO	ROULEMENT
28	RM57410	57410	COJINETE	BEARING	CUSCINETTO	ROULEMENT
29	REC26-8M0033407	26-8M0033407	RETÉN ACEITE	OIL SEAL	PARAOLIO	JOINT D'HUILE
30	REC3852865	25-805331	ARO TÓRICO	O-RING	ANELLO	JOINT TORIQUE
31	REC865876A01	865876A01	DIÁBOLO COMPLETO	CARRIER ASSY	COPERCHIO CUSCINETTO COMPLETO	DIABOLO COMPLET
32	REC26-861694	26-861694	RETÉN ACEITE	OIL SEAL	PARAOLIO	JOINT D'HUILE
33	REC11-8M0105210	11-8M0105210	TUERCA	NUT	DADO	ÉCROU
34	REC805101T	805101T	SEPARADOR	THRUST WASHER	SEPARATORE	RONDELLE DE BUTEE
35	REC11-862907	11-862907	TUERCA	NUT	DADO	ÉCROU
36	REC26-76868A04	26-76868A04	KIT REPARACIÓN BRAVO I, II, III	GEARCASE SEAL KIT BRAVO I, II, III	KIT RIPARAZIONE BRAVO I, II, III	KIT JOINTS BRAVO I, II, III
37	CMPNDAF14UNS		KIT ÁNODOS ZN	ANODE KIT ZN	KIT ANODI ZN	KIT ANODES ZN
	CMPNDAF14UNSA		KIT ÁNODOS AL	ANODE KIT AL	KIT ANODI AL	KIT ANODES AL
38	CM806188		ÁNODO ZN	ANODE ZN	ANODO ZN	ANODE ZN
	CM806188A		ÁNODO AL	ANODE AL	ANODO AL	ANODE AL
39	RECKITMBRAVO3AL		KIT ÁNODOS AL	ANODE KIT AL	KIT ANODI AL	KIT ANODES AL
	CMBRAVO3KITA		KIT ÁNODOS AL	ANODE KIT AL	KIT ANODI AL	KIT ANODES AL
	CMBRAVO3KITM		KIT ÁNODOS MG	ANODE KIT MG	KIT ANODI MG	KIT ANODES MG
	TENKITBRAVOIII-04		KIT ÁNODOS ZN	ANODE KIT ZN	KIT ANODI ZN	KIT ANODES ZN



REC80W90U3
REC80W90U6
RECGREU1
RECGREU12

P. 25

ÁNODO ANODE ANODI ANODE

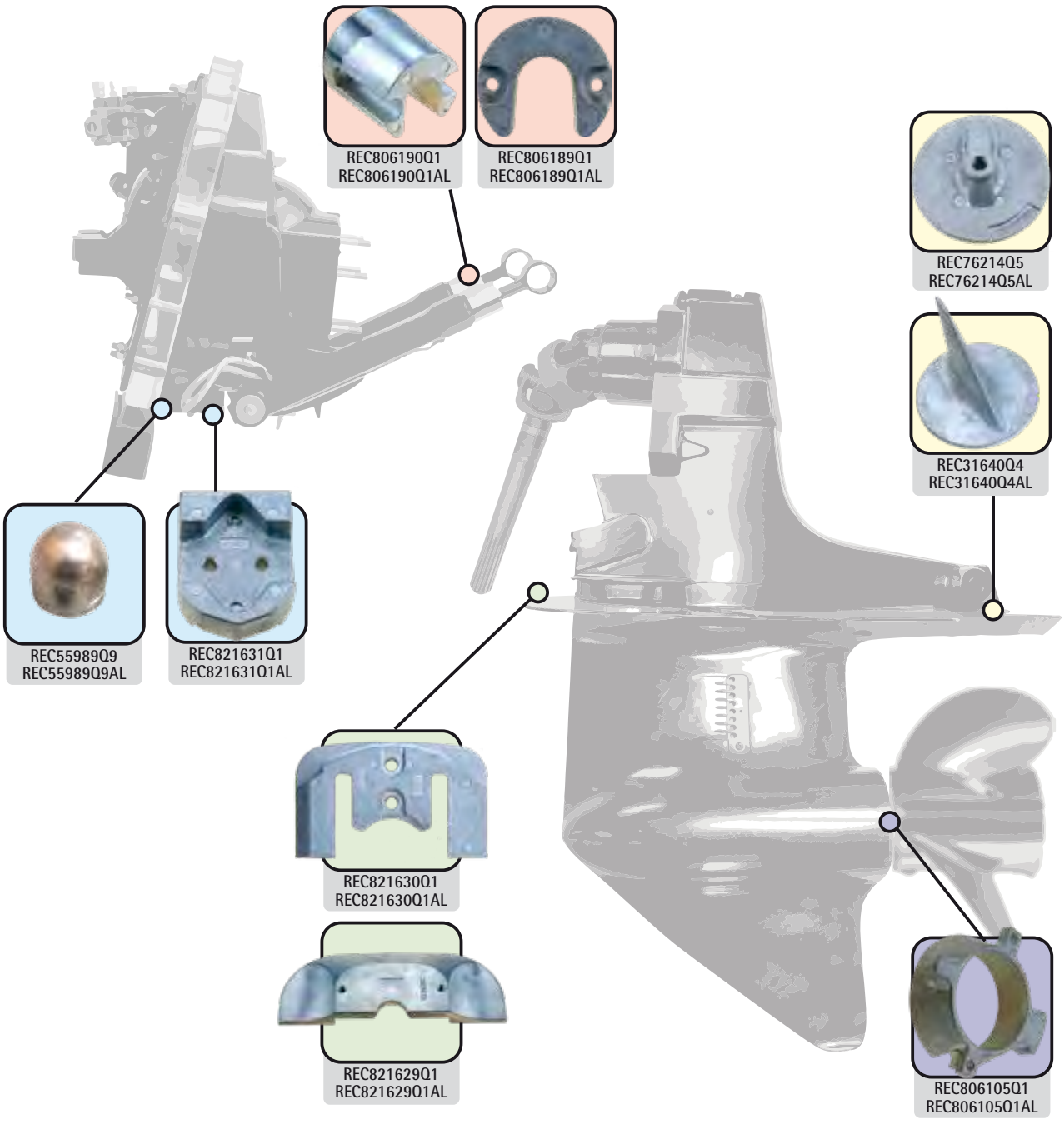

	PLACA PLATE PIASTRA PLAQUE	TRANSOM	PISTÓN PISTON PISTONE PISTON	HÉLICE PROPELLER ELICA HELICE	TRIM TAB	KITS
BRAVO I	REC821630Q1 REC821630Q1AL		REC806190Q1 REC806190Q1AL		REC76214Q5 REC76214Q5AL	RECKITMBRAVO1ZN RECKITMBRAVO1M RECKITMBRAVO1AL
BRAVO II	REC821630Q1 REC821630Q1AL		REC806190Q1 REC806190Q1AL		REC76214Q5 REC76214Q5AL	RECKITMBRAVO23ZN RECKITMBRAVO23M RECKITMBRAVO23AL
BRAVO III	REC821630Q1 REC821630Q1AL		REC806190Q1 REC806190Q1AL		REC76214Q5 REC76214Q5AL	RECKITMBRAVO3ZN RECKITMBRAVO3M RECKITMBRAVO3AL
ALPHA ONE		REC821631Q1 REC821631Q1AL	REC806189Q1 REC806189Q1AL		REC31640Q4 REC31640Q4AL	RECKITMALPHA1ZN RECKITMALPHA1M RECKITMALPHA1AL
ALPHA ONE II GEN	REC821629Q1 REC821629Q1AL	REC821631Q1 REC821631Q1AL	REC806189Q1 REC806189Q1AL	REC806105Q1 REC806105Q1AL	REC76214Q5 REC76214Q5AL	RECKITMALPHA2ZN RECKITMALPHA2M RECKITMALPHA2AL

	(kg)	OEM
ZN REC82163OQ1	0,98	821630Q1
AL REC82163OQ1AL		



	(kg)	OEM
ZN REC821631Q1		821631Q1
AL REC821631Q1AL		



	(kg)	OEM
ZN REC821629Q1	0,70	821629Q1
AL REC821629Q1AL		



	(kg)	OEM
ZN REC806190Q1	0,34	806190Q1
AL REC806190Q1AL		



	(kg)	OEM
ZN REC806189Q1	0,12	806189Q1
AL REC806189Q1AL		



	(kg)	OEM
ZN REC76214Q5	0,34	76214Q5
AL REC76214Q5AL		



	(kg)	OEM
ZN REC31640Q4		31640Q4
AL REC31640Q4AL		



	(kg)	OEM
ZN REC806105Q1	0,23	806105Q1
AL REC806105Q1AL		



	(kg)	OEM
ZN REC55989Q9		
AL REC55989Q9AL		55989Q9
MG REC55989Q9M		



	REF	OEM	(kg)	
ZN	REC34127T2	34127	0,60	80 - 140 HP
AL	REC34127T2AL			



	REF	OEM	(kg)	
ZN	REC94286T1	94286	0,27	25 HP
AL	REC94286T1AL			



	REF	OEM	(kg)	
ZN	REC47820A1	47820	0,31	20 HP
AL	REC47820A1AL			



	REF	OEM	(kg)	
ZN	REC46399	46399	0,40	50 - 140 HP
AL	REC46399AL			



	REF	OEM	(kg)	
ZN	REC806188Q01	806188	0,17	BRAVO I, III
AL	REC806188Q01AL			



	REF	OEM	(kg)
ZN	REC762144	76214-4	0,26
AL	REC762144AL		



	REF	OEM	(kg)	
ZN	REC7614T1	76214	0,31	VERADO - BRAVO
AL	REC7614T1AL			



	REF	OEM	(kg)	
ZN	REC865182Q01	865182	0,52	BRAVO III
AL	REC865182Q01AL			

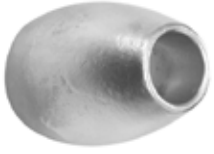

	REF	OEM	(kg)	
ZN	REC43994A2	43994	0,90	ALPHA GEN II BRAVO
AL	REC43994A2AL			



KITS ANODOS — ANODES KIT — KIT ANODI — KIT ANODES

	REF	OEM	
ZN	RECKITMALPHA1ZN		
AL	RECKITMALPHA1AL	888756Q04	ALPHA 1
MG	RECKITMALPHA1M		
ZN	RECKITMALPHA2ZN		
AL	RECKITMALPHA2AL	888756Q03	ALPHA 2
MG	RECKITMALPHA2M		



RECKITMALPHA1ZN
RECKITMALPHA1AL
RECKITMALPHA1M



RECKITMALPHA2AL
RECKITMALPHA2AL
RECKITMALPHA2M

	REF	OEM	
ZN	RECKITMBRAVO1ZN		
AL	RECKITMBRAVO1AL	888758Q02	BRAVO 1
MG	RECKITMBRAVO1M		
ZN	RECKITMBRAVO23ZN		
AL	RECKITMBRAVO23AL	888761Q03	BRAVO 2
MG	RECKITMBRAVO23M		
ZN	RECKITMBRAVO3ZN		
AL	RECKITMBRAVO3AL	888761Q04	BRAVO 3
MG	RECKITMBRAVO3M		



RECKITMBRAVO3ZN
RECKITMBRAVO3AL
RECKITMBRAVO3M



RECKITMBRAVO1ZN
RECKITMBRAVO1AL
RECKITMBRAVO1M



RECKITMBRAVO23ZN
RECKITMBRAVO23AL
RECKITMBRAVO23M

ÁNODO — ANODE — ANODI — ANODE

	REF	OEM	(kg)	
ZN	TEN00800	1301339	0,48	50 HP



	REF	OEM	(kg)	
ZN	TEN00827	17264	0,51	FORMULA 60 HP



	REF	OEM	(kg)	
ZN	TEN00806BIS	821521	0,89	



	REF	OEM	(kg)	ø (mm)	
ZN	TEN00823	823912	0,01	20	
ZN	TEN00824	823913	0,02	24	



	REF	OEM	(kg)	
ZN	TEN00807	55989	0,10	ALPHA ONE BRAVO I



	REF	OEM	(kg)	
ZN	TEN00814	821629	0,70	ALPHA ONE ALPHA GEN II



	REF	OEM	(kg)	
ZN	TEN00815	821630	0,98	BRAVO I, II, III



	REF	OEM	(kg)	
ZN	TEN00820	76214-5	0,34	ALPHA



	REF	OEM	(kg)	
ZN	TEN00819	806105	0,23	PISTON ALPHA ONE ALPHA GEN II



	REF	OEM	(kg)	
ZN	TEN00818	806190	0,34	PISTON BRAVO



	REF	OEM	(kg)	
ZN	TEN00839	853762	0,15	



	REF	OEM	(kg)	
ZN	TEN00817	806189	0,12	PISTON ALPHA



KITS DE ÁNODOS — ANODES KIT — KIT ANODI — KIT ANODES

	REF	OEM	(kg)	
ZN	TENKITALPHAONE/1	8887562Q02	1,83	MR, ALPHA ONE (1984-1990)



	REF	OEM	(kg)	
ZN	TENKITALPHAONE/2	888756Q01 888756Q03	2,52	ALPHA ONE GEN II



	REF	OEM	(kg)	
ZN	TENKITBRAVOI	888758Q01	2,34	BRAVO I



	REF	OEM	(kg)	
ZN	TENKITBRAVOII-III	888761Q01	2,13	BRAVOII & III



	REF	OEM	(kg)	
ZN	TENKITBRAVOIII-04	888761Q02	3	BRAVOIII (2004+)



CUMMINS

KIT				a (mm)	a1 (mm)	d (mm)	p (mm)	c (mm)	e (mm)
	TEN02040			65	15	18	16 x 1,5		
	TEN02041			31	13	16	3/8"		
ZN	TEN02042			20	8	10	M6		
TEN02043T	TEN02043			50	10	16	15,5	22	1/2" gas
TEN02044T	TEN02044		TEN02044TP	50	10	16	7/16"	22	1/2" gas

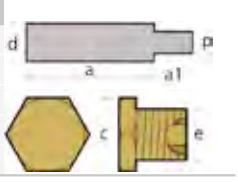



	REF	OEM	(kg)	(mm)	
ZN	TEN01320T	97-8M0151541 879194217 8M0067625 8M0067062 8M0150234 811487		20 x Ø ext. 15 M18x1.5	QSD 2.0/2.8/4.2

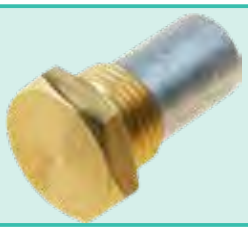

new

ÁNODO ANODE ANODI ANODE

	REF	OEM	(kg)	
ZN	CMX-1	85538	0,136	ALPHA I
AL	CMX-1A	823341	0,13	



	REF	OEM	(kg)	
ZN	CM762144	76214-4	0,31	BRAVO III (2003+)
AL	CM762144A		0,13	



	REF	OEM	(kg)	
ZN	CM762145	76214A2 76214Q5	0,33	ALPHA ONE GEN II BRAVO III (-2003)
AL	CM762145A		0,13	



	REF	OEM	(kg)	
ZN	CM76214Q5	76214Q5	0,33	BRAVO 4 225-250 HP



	REF	OEM	(kg)	
ZN	CM31640	31640A4	0,55	ALPHA ONE
AL	CM31640A		0,13	



	REF	OEM	(kg)	
ZN	CM46399	46399A1 822777Q1	0,36	ALPHA ONE GEN II
AL	CM46399A		0,14	



	REF	OEM	(kg)	
ZN	CM34127	34127T2	0,59	
AL	CM34127A		0,22	



	REF	OEM	(kg)	
ZN	CM806189	806189Q1	0,10	GEN II
AL	CM806189A		0,04	



	REF	OEM	(kg)	
ZN	CM806190	806190Q1	0,35	BRAVO
AL	CM806190A		0,14	



	REF	OEM	(kg)	
ZN	CM806105	806188A1	0,23	ALPHA ONE, GEN II
AL	CM806105A		0,09	



	REF	OEM	(kg)	
ZN	CM55989	55989A9 55989Q9	0,11	ALPHA ONE, GEN II
AL	CM55989A		0,09	



	REF	OEM	(kg)	
ZN	CM821629	821629Q1	0,78	ALPHA ONE, GEN II
AL	CM821629A		0,30	



	REF	OEM	(kg)	
ZN	CM34762	34762A1	0,24	
AL	CM34762A		0,09	



	REF	OEM	(kg)	
ZN	CM806188	806188A1	0,15	BRAVO
AL	CM806188A		0,06	



	REF	OEM	(kg)	
ZN	CM821630	821630A1/Q1	1,00	BRAVO
AL	CM821630A		0,39	



	REF	OEM	(kg)	
ZN	CM43994	43994A2 821631A1	0,95	Antiguos old vecchio Anciennes



	REF	OEM	(kg)	
ZN	CM821631	43994A2 821631A1	0,89	Modernos New style Moderno Nouveaux
AL	CM821631A		0,35	



KITS DE ÁNODOS — ANODES KIT — KIT ANODI — KIT ANODES

	REF	ANODO ANODE	(kg)	
ZN	CMCC	CMC	0,93	ALPHA I , MR



	REF	OEM	(kg)	
ZN	CMPNCZF16Z		0,93	ALPHA I, BRAVO I
AL	CMPNCF16A		0,54	



	REF	OEM	(kg)	
ZN				BRAVO II
AL	CMPNEZF14A		0,65	



	REF	OEM	(kg)	
ZN	CMPNDAF14UNS		0,93	BRAVO III (-2003)
AL	CMPNDAF14UNSA		0,54	



	REF	(kg)	TIPO TYPE TIPO TIPE	
ZN	CMPNAZ	0,09	A	BRAVO
AL	CMPNAA	0,03		
ZN	CMPNBZ	0,23	B	BRAVO
AL	CMPNBA	0,09		
ZN	CMC	0,45	C	BRAVO
AL	CMPNCA	0,19		
ZN	CMPNDZ	0,68	C	BRAVO
AL	CMPNDA	0,29		



	REF	OEM	(kg)	
ZN	CM865182CZ		0,51	BRAVO III (2004+)
AL	CM865182CA		0,42	



	REF	OEM	
MG	CMBRAVO3KITM	888761Q02	BRAVO III (2004+)
AL	CMBRAVO3KITA		



	REF	OEM	
MG	CMALPHAGEN1KITM	888756Q02	MR, ALPHA ONE (1984-90)
AL	CMALPHAGEN1KITA		



	REF	OEM	
MG	CMALPHAKITM	888756Q01	ALPHA ONE
AL	CMALPHAKITA	888756Q03	GEN II



	REF	OEM	
MG	CMBRAVO1KITM	888758Q01	BRAVO I
AL	CMBRAVO1KITA		



	REF	OEM	
MG	CMBRAVO2Y3KITM	888761Q01	BRAVO II BRAVO III
AL	CMBRAVO2Y3KITA		



TRANSOM

KITS DE TRANSOM Y PISTÓN DIRECCIÓN ALPHA ONE GEN I & II

GIMBAL HOUSING & POWER STEERING CYLINDER KIT ALPHA ONE GEN I & II

TRANSOM E PISTONE STERZO ALPHA ONE GEN I & II

KIT TRANSOM ET PISTON DE DIRECTION ALPHA ONE GEN I & II

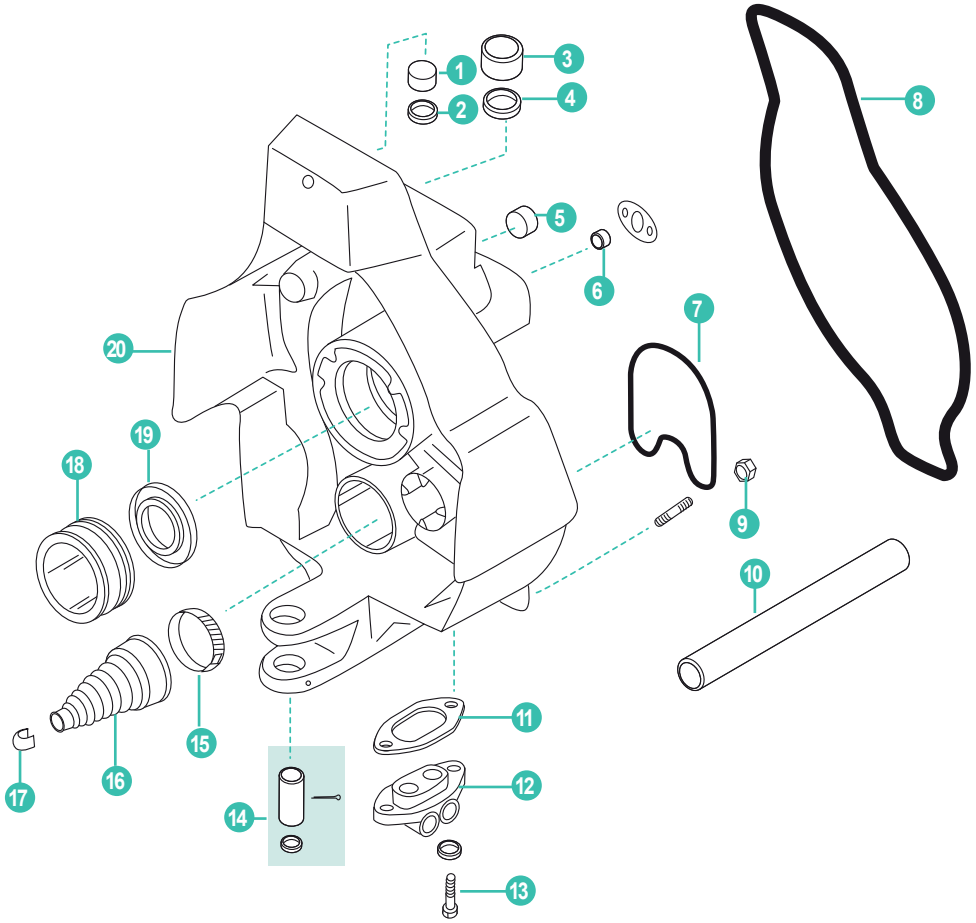

21



REF
REC22-88847A1

22



REF
REC30-879194A01

23



REF
REC27-47644-1

24



REF
REC8M0080805

25



26



REF
REC27-995061

27



	REF	OEM				
1	RM23-98356	23-98356	CASQUILLO SUPERIOR	UPPER BUSHING	BOCCOLA SUPERIORE	BAGUE SUPÉRIEURE
2	REC26-54925	26-54925	RETÉN (Alpha one)	SEAL (Alpha one)	PARAOLIO (Alpha one)	JOINT (Alpha one)
3	RM23-983571	23-983571	CASQUILLO INFERIOR	LOWER BUSHING	BOCCOLA INFERIORE	BAGUE INFÉRIEUR
4	REC26-55682	26-55682	RETÉN (Alpha one)	SEAL (Alpha one)	PARAOLIO (Alpha one)	JOINT (Alpha one)
	REC26-8M2005029	26-416071	RETÉN (Alpha one Gen II)	SEAL (Alpha one Gen II)	PARAOLIO (Alpha one Gen II)	JOINT (Alpha one Gen II)
5	REC22-73379	22-73379	TAPÓN (.250-18)	CAP (.250-18)	TAPPO (.250-18)	BOUCHON (.250-18)
6	RM23-816599	23-816599	CASQUILLO	BUSHING	BOCCOLA	BAGUE
7	REC41802	41802	RETÉN	SEAL	TENUTA	JOINT D'HUILE
8	REC43713	43713	JUNTA TRANSOM (Gen II, Bravo)	BLACKHAWK TRANSOM SEAL (Gen II, Bravo)	GUARNIZIONE TRANSOM (Gen II, Bravo)	JOINT TRANSOM (Gen II, Bravo)
	REC65533A1	65533A1	JUNTA TRANSOM (MC1/R/Alpha one)	TRANSOM SEAL (MC1/R/Alpha one)	GUARNIZIONE TRANSOM (MC1/R/Alpha one)	JOINT TRANSOM (MC1/R/Alpha one)
9	REC11-34933	11-34933	TUERCA	NUT	DADO	ÉCROU
10	REC32-4172533	32-4172533	TUBO AGUA Ø 3/4"	Ø 3/4" WATER HOSE	Ø 3/4" TUBO ACQUA	DURITE ENTREE D'EAU Ø 3/4"
	REC32-32461	32-32461	TUBO AGUA Ø 5/8"	Ø 5/8" WATER HOSE	Ø 5/8" TUBO ACQUA	DURITE ENTREE D'EAU Ø 5/8"
11	REC27-988231	27-988231	JUNTA	GASKET	GUARNIZIONE	JOINT
12	REC8M0080805	8M0080805	KIT CONECTOR	TRIM CONNECTOR KIT	KIT CONNETTORE TRIM,	KIT CONNECTEUR
13	REC10-28668	10-28636	TORNILLO	SCREW	VITE	VIS
14	REC17-8M0073409	8M0073409	KIT PIN	KIT PIN	KIT SPINOTTO	KIT CLAVETTE
15	REC54-815504320	54-815504320	ABRAZADERA	CLAMP	FASCETTTA	COLLIER
16	REC74639Q02	74639Q02	FUELLE CABLE CAMBIO	SHIFT BELLOW	CAVO CAMBIO A SOFFIETTO	SOUFFLET CÂBLE CHANGEMENT
17	REC54-38863	54-38863	ABRAZADERA	CLAMP	FASCETTA	COLLIER
18	REC30-879194A01	30-879194A01	COJINETE TRANSOM (Alpha one Gen I, II)	GIMBAL BEARING FOR TRANSOM (Alpha one Gen I, II)	CUSCINETTO TRANSOM (Alpha one Gen I, II)	ROULEMENT TRANSOM (Alpha one Gen I, II)
19	REC26-88416	26-88416	RETÉN	SEAL	PARAOLIO	JOINT
20	RM94989A6	94989A6	TRANSOM GEN I (eje cuadrado / estriado)	GEN I TRANSOM (square / splined shaft)	TRANSOM GEN I (asse quadrato / scanalato)	TRANSOM GEN I (axe carré / cannelé)
	RM42260A6	42260A6	TRANSOM GEN I (eje cuadrado / cuadrado)	GEN I TRANSOM (squared fixation shaft)	TRANSOM GEN I (asse quadrato)	TRANSOM GEN I (axe carré)
	RM43881A14	8M0062568	TRANSOM (1991+) GEN II	GIMBAL HOUSING ASSY. (1991+)	TRANSOM (1991+) GEN II	TRANSOM (1991+) Gen II
21	REC22-88847A1	22-88847A1	KIT TUERCA Y TAPONES	PLUG KIT	KIT DADO TAPPO	KIT ÉCROU ET BOUCHONS
22	REC30-879194A01	30-879194A01	COJINETE TRANSOM (Alpha one Gen I,,II)	GIMBAL BEARING FOR TRANSOM (Alpha one Gen I, II)	CUSCINETTO TRANSOM (Alpha one Gen I,, II)	ROULEMENT TRANSOM (Alpha one Gen I, II)
23	REC27-47644-1	27-47644-1	CONECTOR HIDRÁULICO Alpha One S (1986-89) SSM II / III / IV / V (1982-95) Para conector: 47347	HYDRAULIC CONNECTOR Alpha One S (1986-89) SSM II / III / IV / V (1982-95) For connector: 47347	CONNETORE IDRAULICO Alpha One S (1986-89) SSM II / III / IV / V (1982-95) Per connetore: 47347	JOINT Alpha One S (1986-89) SSM II / III / IV / V (1982-95) Pour connecteur: 47347
24	REC8M0080805	8M0080805	KIT CONECTOR TRIM	TRIM CONNECTOR KIT	KIT CONNETTORE TRIM	KIT CONECTEUR TRIM
25	CM55989	55989Q9	ÁNODO ZN	ANODE ZN	ANODO ZN	ANODE ZN
	CM55989A		ÁNODO AL	ANODE AL	ANODO AL	ANODE AL
	REC55989Q9		KIT ÁNODO AL	ANODE AL KIT	KIT ANODO AL	KIT ANODE AL
26	REC27-995061	27-995061	JUNTA	GASKET	GUARNIZIONE	JOINT
27	CM821631	821631Q1	ÁNODO ZN	ANODE ZN	ANODO ZN	ANODE ZN
	CM821631A	821631Q1	ÁNODO AL	ANODE AL	ANODO AL	ANODE AL

TRANSOM COMPLETO — TRANSOM ASSY — TRANSOM COMPLETO — TRANSOM COMPLET

REF	OEM	
TRANSONALPHAI	6-6010000CP	Alpha One Gen I



REF	OEM	
TRANSONALPHA2G	6-6111002LP	Alpha One Gen II



CAMPANA TRANSOM, CABLE CAMBIO Y BOMBA DIRECCIÓN

TRANSOM PLATE, SHIFT CABLE & PUMP ASSY. POWER STEERING

CAMPANA TRANSOM, CAVO CAMBIO E POMPA STERZO

CASQUE, CÂBLE CHANGEMENT ET POMPA DIRECTION

14
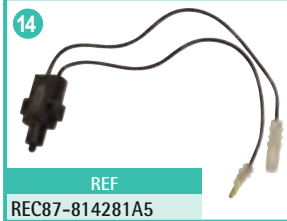
REF
REC87-814281A5

18

REF
REC10-31700

15

REF
RM8M0052936

19

REF
REC73873A1

16

REF
REC87-808009A2

20

REF
REC861578

17 new

REF
REC8M0052939

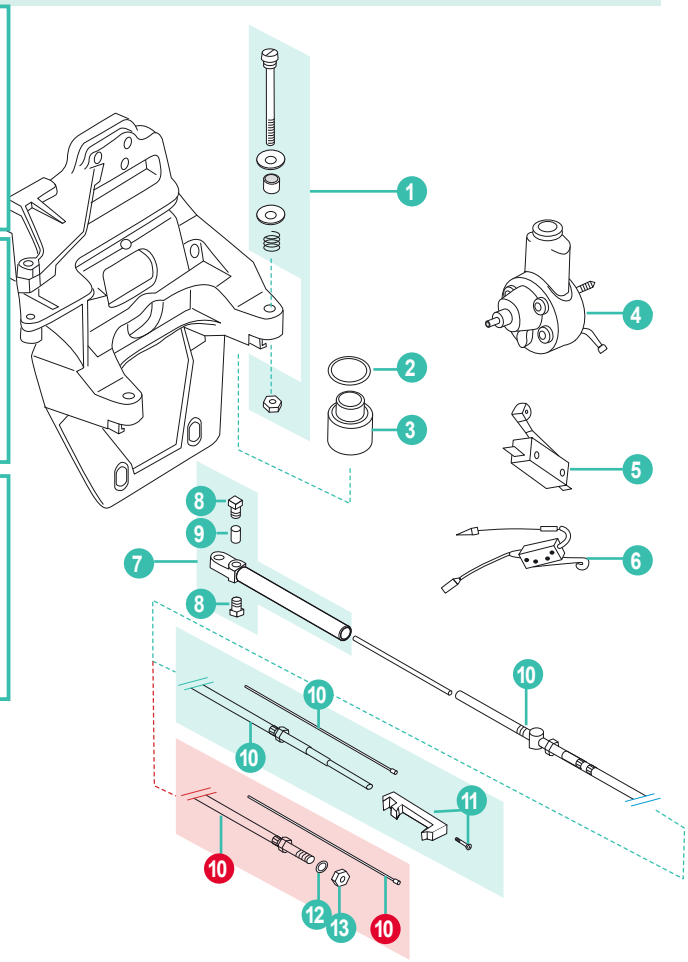

	REF	OEM				
1	REC10-97934A1	10-97934A1	KIT MONTAJE SILENTBLOCK CAMPANA	MOTOR MOUNT BOLT KIT	KIT SILENTBLOCK CAMPANA	KIT VISSERIE
2	REC23-99322	23-99322	ESPACIADOR SILENTBLOCK	SILENTBLOCK SPACER	SILENTBLOCK DISTANZIALE	CALE
3	REC865329A02	865329A02	SILENTBLOCK MOTOR	MOTOR MOUNT SILENTBLOCK	SILENTBLOCK MOTORE	KIT SILENTBLOCK MOTEUR
4	REC16792A39	16792A39	BOMBA DIRECCIÓN	PUMP ASS. POWER STEERING	POMPA DI STERZO	POMPE DIRECTION
5	RM864363A1	864363A1	MICRORRUPTOR ANTIGUO	SHIFT PLATE KIT, OLD	MICROINTERRUTTORE VECCHIO	MICROSWITCH DE TRANSOM ANCIEN
6	RM864364A1	864364A1	MICRORRUPTOR	SHIFT PLATE KIT	MICROINTERRUTTORE	MICROSWITCH
7	REC02644		GUÍA CABLE CAMBIO	GUIDE	GUIDA CAVO CAMBIO	EMBOUT DE CABLE D'INVERSEUR
8	REC10-20518	10-20518	TORNILLO	BOLT	VITE	VIS
9	REC43436	43436	ANCLAJE	ANCHOR	SEDE	ANCRAGE
10	REC865436A02	865436A02	CABLE CAMBIO (R/MR/Alpha one Gen II)	(R/MR/Alpha one Gen II) SHIFT CABLE	CAVO CAMBIO (R/MR/Alpha one Gen II)	CÂBLE CHANGEMENT (R/MR/Alpha one Gen II)
	RM19543A10	865436A02	CABLE CAMBIO ORIGINAL (R/MR/Alpha one Gen II)	(R/MR/Alpha one Gen II) SHIFT CABLE ORIGINAL	CAVO CAMBIO ORIGINAL (R/MR/Alpha one Gen II)	CÂBLE CHANGEMENT ORIGINAL (R/MR/Alpha one Gen II)
	REC865437A02	865437A02	CABLE CAMBIO (Bravo)	(Bravo) SHIFT CABLE	CAVO CAMBIO (Bravo)	CÂBLE CHANGEMENT (Bravo)
11	REC8507522	8507522 + 10-31700	KIT ACOPLE CABLE CAMBIO	SHIFT CABLE SLIDE	KIT ACCOPIAMENTO CAVO CAMBIO	KIT ATTACHE CABLE
12	REC12-815472	12-815472	ARANDELA (Bravo)	WASHER (Bravo)	RONDELLA (Bravo)	RONDELLE (Bravo)
13	RM11-49910	11-49910	(Bravo)	NUT (Bravo)	DADO (Bravo)	ÉCROU (Bravo)
14	REC87-814281A5	87-814281A5	MICRORRUPTOR 3.0L, LX, 4.3L, LXL, 5.0L & 5.7, LX (1996+)	SHIFT PLATE KIT 3.0L, LX, 4.3L, LXL, 5.0L & 5.7, LX (1996+)	MICROINTERRUTTORE 3.0L, LX, 4.3L, LXL, 5.0L & 5.7, LX (1996+)	MICROSWITCH 3.0L, LX, 4.3L, LXL, 5.0L & 5.7, LX (1996+)
15	RM8M0052936	87-8M0052936 87-808009A1 87-808009A3	MICRORRUPTOR 4.3MPI, 5.0LMPI, 350MAG MPI, MX, 6.2L MPI , 4.3, 5.0,5.7L EFI, LX	SHIFT PLATE KIT 34.3MPI, 5.0LMPI, 350MAG MPI, MX, 6.2L MPI , 4.3, 5.0,5.7L EFI, LX	MICROINTERRUTTORE 4.3MPI, 5.0LMPI, 350MAG MPI, MX, 6.2L MPI , 4.3, 5.0,5.7L EFI, LX	MICROSWITCH 4.3MPI, 5.0LMPI, 350MAG MPI, MX, 6.2L MPI , 4.3, 5.0,5.7L EFI, LX
16	REC87-808009A2	87-808009A2 87-8M0052935	MICRORRUPTOR 4.3MPI, 5.0LMPI, 350MAG MPI, MX, 6.2L MPI	SHIFT PLATE KIT 4.3MPI, 5.0LMPI, 350MAG MPI, MX, 6.2L MPI	MICROINTERRUTTORE 4.3MPI, 5.0LMPI, 350MAG MPI, MX, 6.2L MPI	MICROSWITCH 4.3MPI, 5.0LMPI, 350MAG MPI, MX, 6.2L MPI
17	REC8M0052939	8M0052939 889514A01 814281A7	INTERRUPTOR DIGITAL CAMBIO GASOLINA Y GASOIL	SWITCH DIGITAL THROTTLE FUEL & DIESEL	DIGITAL INTERRUTTORE DIESEL E BENZINA	DIGITAL INTERRUPTEUR DIESEL ET ESSENCE
18	REC10-31700	10-31700	TORNILLO	SCREW	VITE	VIS
19	REC73873A1	73873A1	POLEA "V" BOMBA SERVO	P/S PUMP PULLEY	PULEGGIA "V"	POULIE "V"
20	REC861578	861578	POLEA SERPENTÍN	P/S PUMP PULLEY	PULEGGIA SERPENTINA	POULIE SERPENTINE

SOPORTE TRANSOM ALPHA ONE GEN II
GIMBAL HOUSING RING ASSEMBLY ALPHA ONE GEN II
SUPPORTO TRANSOM ALPHA ONE GEN II
SUPPORT TRANSOM ALPHA ONE GEN II

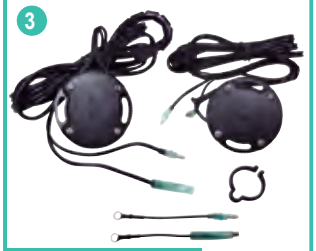

REF
REC805320A03



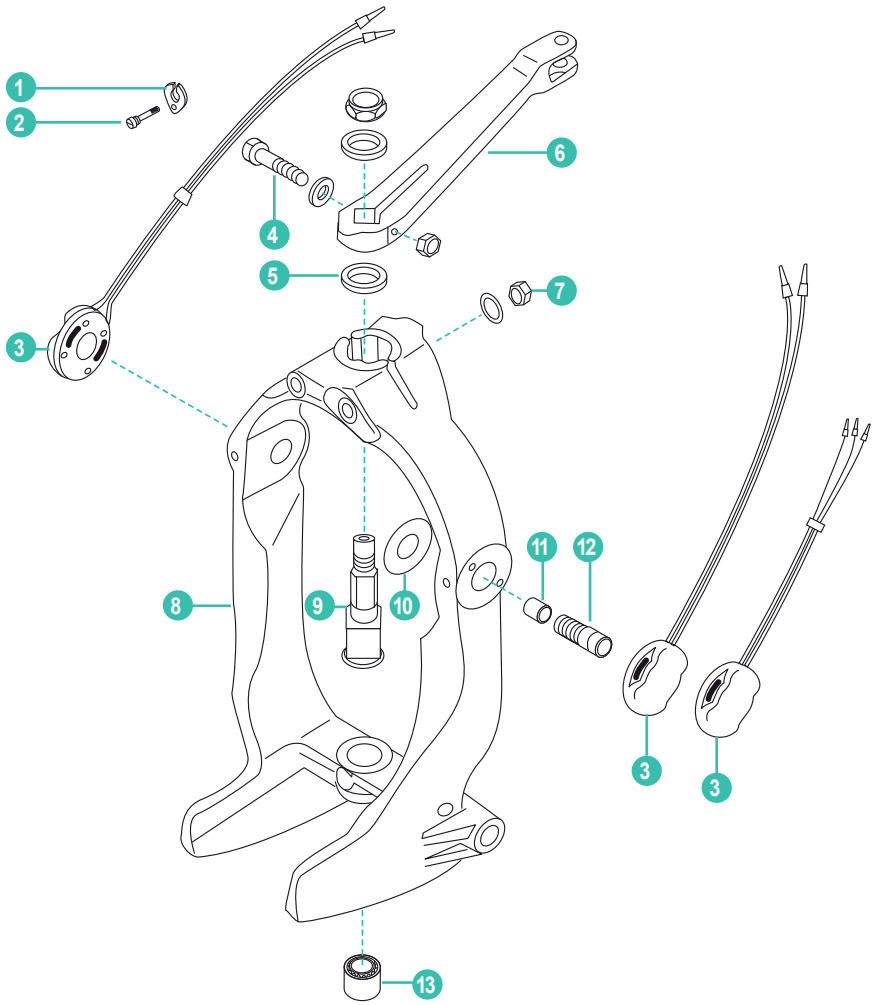

	REF	OEM				
1	RM54-12078	54-12078	ABRAZADERA	CLAMP	FASCETTA	COLLIER
2	RM10-28635	10-28635	TORNILLO SUJECCIÓN	SCREW	VITE	VIS
3	REC805320A03	805320A03	KIT SENSORES TRIM ANALÓGICO	TRIM SENSOR KIT. ANALOGICAL	KIT SENSORI TRIM	KIT SONDE DE TRIM
	REC8M0095310	8M0095310	KIT SENSOR TRIM DIGITAL	TRIM SENSOR KIT. DIGITAL	SENSORE TRIM DIGITAL	SONDE DE TRIM DIGITAL
4	RM10-807204	10-807204	TORNILLO	SCREW	VITE	VIS
5	RM12-98548	12-98548	ARANDELA	WASHER	RONDELLA	RONDELLE
6	RM866322A01	866322A01	BIELA DIRECCIÓN	LEVER ASSY	BIELLA STERZO	PIVOT DE DIRECTION
7	REC11-862903	11-134371	TUERCA	NUT	DADO	ÉCROU
8	RM865328A01	865328A01	SOPORTE TRANSOM Design II (0M815639+)	GIMBAL RING ASSEMBLY Design II (0M815639+)	SUPPORTI TRANSOM Design II (0M815639+)	FOURCHE DE DIRECTION Gen II (0M815639+)
9	REC98230A1	98230A1	EJE	SHAFT	ASSE	ARBRE
10	RM12-41721	12-41721	ARANDELA	WASHER	RONDELLA	RONDELLE
11	REC23-847637	23-847637	CASQUILLO	BUSING	BOCCOLA	BAGUE
12	REC77123	77123	TORNILLO ALPHA (-1998) (-0M815638)	ALPHA SCREW (-1998) (-0M815638)	VITE ALPHA (-1998) (-0M815638)	VIS Alpha (-1998) (-0M815638)
	REC10-86801	10-86801	TORNILLO ALPHA (1998+) (0M85639+)	ALPHA SCREW (1998+) (0M85639+)	VITE ALPHA (1998+) (0M85639+)	VIS Alpha (1998+) (0M815639+)
13	RM23-99352	23-99352	COJINETE	BEARING	CUSCINETTO	ROULEMENT
14	REC806034A1	866200A01	PISTÓN DIRECCIÓN MODERNA (1991+) Plástico	NEWER POWER STEERING PISTON (1991+) Plastic	PISTONE IDRAULICO MODERNO (1991+) Plastica	VERIN DE DIRECTION MODERN (1991+) Plastique
	RM806034A2	806034A2	PISTON DIRECCIÓN ANTIGUA (-1991) Metálico	OLDER POWER STEERING PISTON (-1991) Metal	PISTONE IDRAULICO VECCHIO (-1991) Metallo	VERIN DE DIRECTION ANCIEN (-1991) Metalique

CAMPANA TRANSOM
MC, MR1, ALPHA ONE,
ALPHA ONE GEN II

BELL HOUSING
MC, MR1, ALPHA ONE,
ALPHA ONE GEN II

CAMPANA TRANSOM
MC, MR1, ALPHA ONE,
ALPHA ONE GEN II

CASQUE
MC, MR1, ALPHA ONE,
ALPHA ONE GEN II

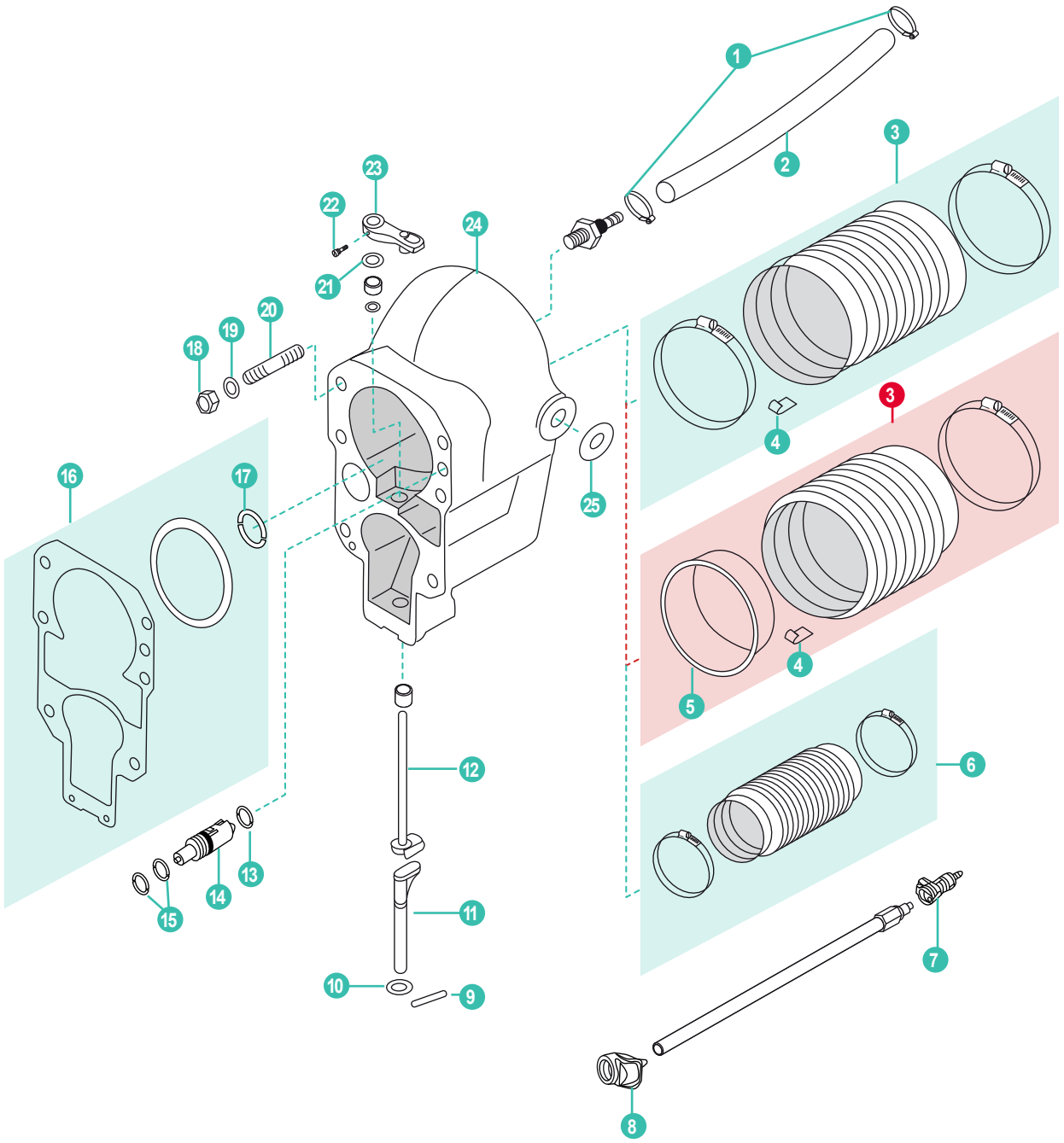

26



REF
RM53-87843

27



REF
REC23-806036A1

28



REF
REC23-805041A2

29



REF
REC8M0052939

	REF	OEM				
1	REC54-815504412	54-815504412	ABRAZADERA	CLAMP	FASCETTA	COLLIER
2	REC32-4172533	32-4172533	TUBO AGUA Ø 3/4 137/8"L	WATER HOSE Ø 3/4 137/8"L	TUBO ACQUA Ø 3/4" 137/8"L	DURITE Ø 3/4" 137/8"L
	REC32-32461	32-32461	TUBO AGUA Ø 5/8 137/8"L	WATER HOSE Ø 5/8 137/8"L	TUBO ACQUA Ø 5/8" 137/8"L	DURITE Ø 5/8" 137/8"L
3	REC60932A4	60932A4	KIT FUELLE (3469428+) R/MR/ALPHA ONE	U-JOINT BELLOW (3469428+) KIT R/MR/ALPHA ONE	KIT CUFFIA (3469428+) R/MR/ALPHA ONE	KIT SOUFFLE (3469428+) R/MR/Alpha one
3	REC816431A1	816431A1	KIT FUELLE (Alpha one Gen II)	U-JOINT BELLOW KIT (Alpha one Gen II)	KIT CUFFIA (Alpha one Gen II)	KIT SOUFFLET (Alpha one Gen II)
4	REC54-86049	54-86049	CLIP FUELLE	GROUNDING CLIP	CLIP CUFFIA	CLIPS SOUFFLET
5	REC816607	816607	CASQUILLO FUELLE	BELLOW FLANGE RING	ANELLO	BAGUE
6	REC18654A1	18654A1	KIT FUELLE ESCAPE	U-JOINT BELLOW KIT	KIT CUFFIA DI SCARICO	KIT SOUFFLET ÉCHAPPEMENT
7	REC22-865417	22-865417	CONECTOR HEMBRA (Design II 0M815639+)	FITTING FEMALE QUICK CONNECT (Design II 0M815639+)	CONETTORE FEM (Design II 0M815639+)	CONNECTEUR FEM (Design II 0M815639+)
8	REC22-860382	22-860382	CONECTOR VELOCIMETRO	COUPLING ASSEMBLY SPEEDOMETER	CONNETTORE DEL TACHIMETRO	CONNECTEUR DE COMPTEUR DE VITESSE
9	REC18-32665	18-32665	PASADOR	COTTER PIN	CHIAVISTELLO	GOUPILLE
10	REC12-32666	12-32666	ARANDELA	WASHER	RONDELLA	RONDELLE
11	REC621041	621041	EJE INTERMEDIO	INTERMEDIATE SHIFT SHAFT	ASSE INTERMEDIO	ARBRE
12	REC816685	816685	EJE CABLE CAMBIO (Alpha one Gen II)	UPPER SHIFT SHAFT (Alpha one Gen II)	ASSE CAMBIO (Alpha one Gen II)	ARBRE CÂBLE CHANGEMENT (Alpha one Gen II)
	REC45589A3	45589A3	EJE CABLE CAMBIO (Alpha one Gen I)	UPPER SHIFT SHAFT (Alpha one Gen I)	ASSE CAMBIO (Alpha one Gen I)	ARBRE CÂBLE CHANGEMENT (Alpha one Gen I)
13	REC25-62705	25-62705	ANILLO	O-RING	O-RING	JOINT TORIQUE
14	REC18920A1	18920A1	VÁLVULA COMPLETA	VALVE ASSY	VALVOLA COMPLETA	SOUPAPE COMPLETE
15	REC25-48171	25-48171	ANILLO	O-RING	O-RING	JOINT TORIQUE
16	REC27-94996Q2	27-94996Q2	KIT JUNTAS TRANSOM (Alpha one & Gen II)	GASKET KIT (Alpha one & Gen II)	KIT GUARNIZIONI TRANSOM (Alpha one & Gen II)	KIT JOINS (Alpha one & Gen II)
	REC27-64818Q4	27-64818Q4	KIT JUNTAS TRANSOM (MC1)	GASKET KIT (MC1)	KIT GUARNIZIONI TRANSOM (MC1)	KIT JOINTS (MC1)
17	REC0307239	25-33504	ARO TÓRICO	O-RING	O-RING	JOINT TORIQUE
18	REC11-34933	11-134391	TUERCA (.4375-20)	NUT (.4375-20)	DADO (.4375-20)	ÉCROU (.4375-20)
19	REC12-45176	12-35935	ARANDELA (.435 x .875 x .105)	WASHER (.435 x .875 x .105)	RONDELLA (.435 x .875 x .105)	RONDELLE (.435 x .875 x .105)
20	REC16-59579	16-59579	TORNILLO	SCREW	VITE	VIS
21	REC12-39116	12-39116	JUNTA	GASKET	GUARNIZIONE	JOINT
22	REC10-45590	10-45590	TORNILLO CIERRE	SET SCREW	VITE	VIS
23	REC45518A3	45518A3	PASADOR	SHIFT ARM	CHIAVISTELLO	GOUPILLE
24	RM42815A6	42815A6	CAMPANA TRANSOM Alpha one (1983-90)	BELL HOUSING Alpha one (1983-90)	CAMPANA TRANSOM Alpha one (1983-90)	CASQUE TRANSOM Alpha one (1983-90)
	RM806031A2	806031A2	CAMPANA TRANSOM GEN II (1991+)	GEN II BELL HOUSING (1991+)	CAMPANA TRANSOM GEN II (1991+)	CASQUE TRANSOM GEN II (1991+)
25	REC12-72498	12-72498	ARANDELA	WASHER	RONDELLA	RONDELLE
26	RM53-87843	53-87843	CIRCLIP	CIRCLIP	CIRCLIP	CLIPS
27	REC23-806036A1	23-806036A1	KIT RETENES Alpha Gen II, (F094775+)	SHIFT SHAFT BUSING Alpha Gen II, (F094775+)	KIT TENUTE Alpha Gen II, (F094775+)	KIT JOINTS Alpha Gen II, (F094775+)
28	REC23-805041A2	23-805041A2	KIT RETENES R/MR, Alpha Gen II, (-F094774)	SHIFT SHAFT BUSING R/MR, Alpha Gen II, (-F094774)	KIT TENUTE R/MR, Alpha Gen II, (-F094774)	KIT JOINTS R/MR, Alpha Gen II, (-F094774)
29	REC45518T1	45518T1	KIT CAMBIO	SHIFT LEVER KIT	KIT CAMBIO	KIT CHANGEMENT
30	REC22-861150T02	22-861150A1	RACOR ACEITE	OIL RACORD	RACORDO OLIO	RACORD D'HUILE
31	RM22-861163	22-861163	RACOR ACEITE	OIL RACORD	RACORDO OLIO	RACORD D'HUILE

30



REF
REC22-861150T02

31



REF
RM22-861163

TRANSOM BRAVO | GIMBAL HOUSING BRAVO | TRANSOM BRAVO | TRANSOM BRAVO

22

REF
REC22-88847A1

23

REF
REC8M0080805

24

REF
REC30-879194A01

25


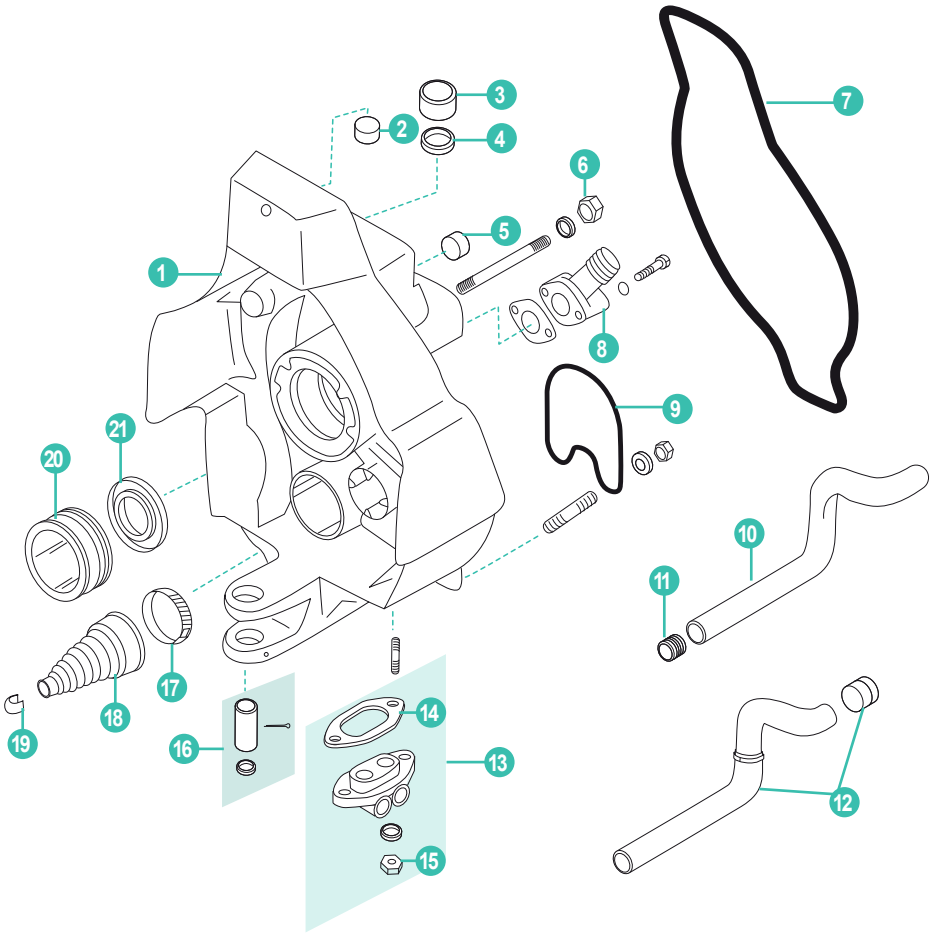

	REF	OEM				
1	RM43881A17	43881A17	CARCASA	GIMBAL HOUSING ASSY.	CARCASSA	PLATINE
2	RM23-98356	23-98356	CASQUILLO SUPERIOR	UPPER BUSHING	BOCCOLA SUPERIORE	BAGUE SUPÉRIEURE
3	RM23-983571	23-983571	CASQUILLO INFERIOR	BUSHING - LOWER	BOCCOLA INFERIORE	BAGUE IN´F´ÉRIEUR
4	REC26-8M2005029	26-416071	RETÉN	OIL SEAL	PARAOLIO	JOINT D'HUILE
5	REC22-428611	22-428611	TAPÓN	PLUG	TAPPO	BOUCHON
6	REC11-34933	11-34933	TUERCA	NUT	DADO	ÉCROU
7	REC43713	43713	JUNTA TRANSON	TRANSOM SEAL	GUARNIZIONE TRANSOM	JOINT TRANSOM
8	RM22-43828	22-43828T	CONECTOR (-0W099999	CONNECTOR (-0W099999)	PIPETTA (-0W099999)	CONNECTEUR (-0W099999)
	RM865470	865470	CONECTOR (0W100000+)	CONNECTOR (0W100000+)	PIPETTA (0W100000+)	CONNECTEUR (0W10000+)
9	REC41802	41802	RETÉN	SEAL	TENUTA	JOINT D'HUILE
10	REC32-43437	32-43437	TUBO AGUA DESIGN I	WATER HOSE DESIGN I	TUBO ACQUA DESIGN I	DURITE DESIGN I
11	REC41674T	41674T	CASQUILLO	INSERT	BOCCOLA	BAGUE
12	REC8M0062102	32-8M0062102	TUBO DE AGUA DESIGN II	WATER HOSE DESIGN II	TUBO ACQUA DESIGN II	DURITE DESIGN II
13	REC8M0080805	8M0080805	KIT CONECTOR	CONNECTOR KIT	CONNETTORE	KIT CONECTEUR
14	REC27-988231	27-988231	JUNTA	GASKET	GUARNIZIONE	JOINT
15	REC11-8267089	11-8267089	TUERCA	NUT	DADO	ÉCROU
16	REC17-8M0073409	17-8M0073409	KIT PIN	PIN SET	KIT SPINOTTO	KIT GOUPILLE
17	REC54-815504320	54-815504320	ABRAZADERA	CLAMP	FASCETTA	COLLIER
18	REC74639Q02	74639Q02	FUELLE CABLE CAMBIO	SHIFT CABLE BELLOW	CUFFIA CAMBIO	SOUFFLET CÂBRE CHANGEMENT
19	REC54-38863	54-38863	ABRAZADERA	CLAMP	FASCETTA	COLLIER
20	REC30-879194A01	879194A01 & A02	COJINETE	GIMBAL BEARING	CUSCINETTO	ROULEMENT
21	REC26-88416	26-88416	RETÉN ACEITE	OIL SEAL	PARAOLIO	JOIT D'HUILE
22	REC22-88847A1	22-88847A1	KIT TUERCA Y TAPONES	PLUG KIT	KIT DADO TAPPO	KIT ÉCROU ET BOUCHON
23	REC8M0080805	8M0080805	KIT CONECTOR TRIM	TRIM CONNECTOR KIT	KIT CONNETTORE TRIM	KIT CONNECTEUR TRIM
24	REC30-879194A01	30-879194A01	COJINETE	BEARING	CUSCINETTO	ROULEMENT
25	CM821631	821631Q	ÁNODO ZN	ANODE ZN	ANODO ZN	ANODE ZN
	CM821631A	821631Q	ÁNODO AL	ANODE AL	ANODO AL	ANODE AL

CAMPANA BRAVO | BELL HOUSING BRAVO | CAMPANA BRAVO | CASQUE BRAVO

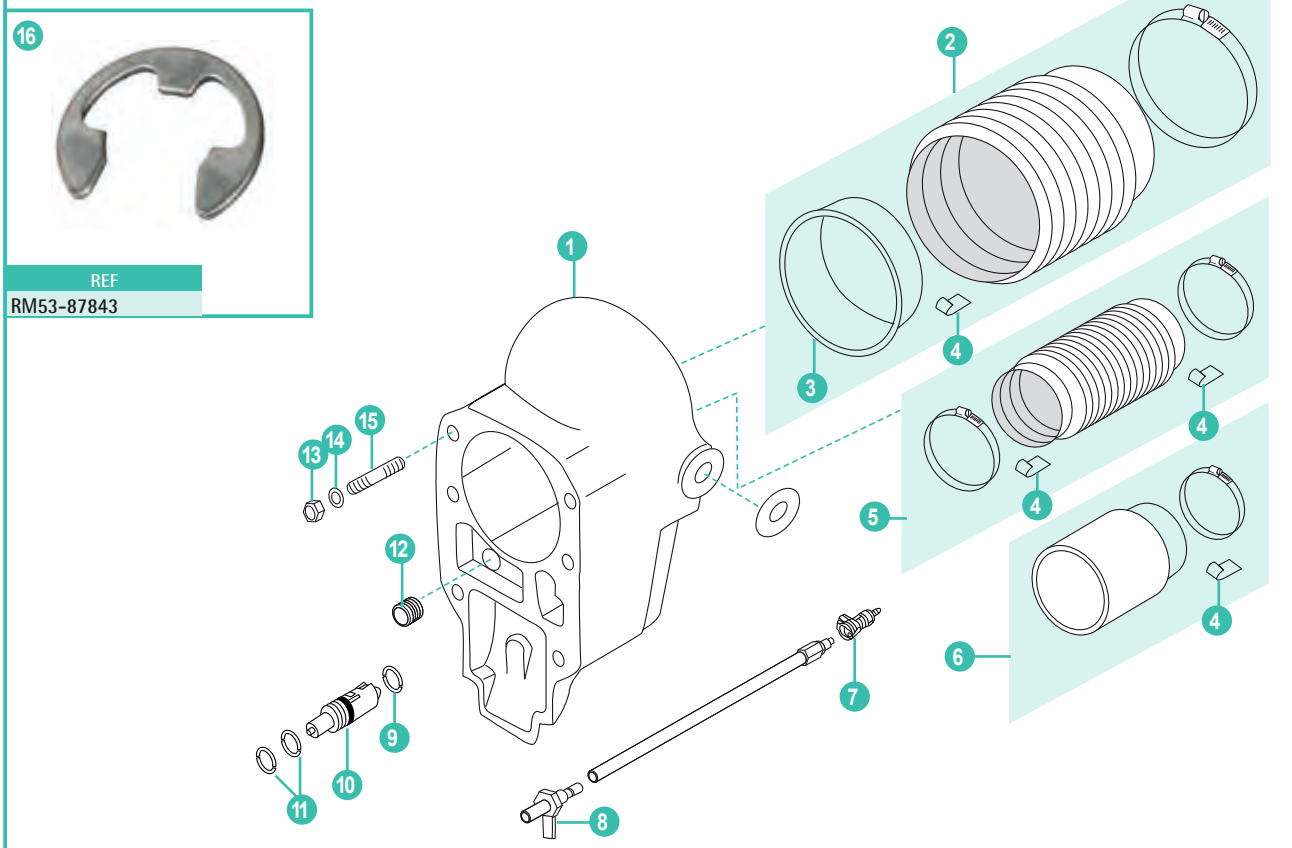

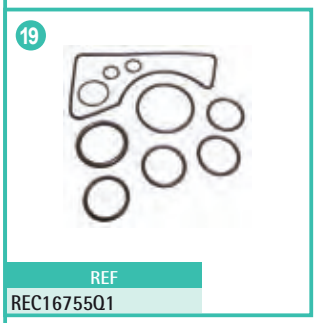







	REF	OEM				
1	RM41646A9	41646A9	CAMPANA Bravo I, II, III (-2A514802)	Bravo I, II, III BELL HOUSING (-2A514802)	CAMPANA Bravo I, II, III (-2A514802)	CASQUE TRANSOM Bravo I, II, III (-2A514802)
2	REC86840A05	86840A05	FUELLE TRANSON	U-JOINT BELLOW	CUFFIA TRANSON	SOUFFLET
3	REC862209	862209	CASQUILLO FUELLE	BELLOW FLANGE RING	ANELLO	BAGUE
4	REC54-86049	54-86049	CLIP	CLIP	CLIP	CLIPS
5	REC18654A1	18654A1	FUELLE ESCAPE	EXHAUST BELLOW	CUFFIA SCARICO	SOUFFLET ÉCHAPPEMENT
6	REC78458A1	78458A1	TUBO ESCAPE	EXHAUST TUBE	TUBO DI SCARICO	DURITE ÉCHAPPEMENT
7	REC22-865417	22-865417	CONECTOR	FITTING	CONETTORE	CONNECTEUR
8	REC815303T	815303T	ADAPTADOR	ADAPTER	ADATTATORE	ADAPTATEUR
9	REC25-62705	25-62705	ARO	O-RING	ANELLO	JOINT TORIQUE
10	REC18920A1	18920A1	VÁLVULA COMPLETA	VALVE ASSEMBLY	VALVOLA COMPLETA	SOUPAPE COMPLET
11	REC25-48171	25-48171	ARO	O-RING	ANELLO	JOINT TORIQUE
12	REC41674T	41674T	KIT CASQUILLO	INSERT	KIT GHIERA	KIT BAGUE
13	REC11-34933	11-859116	CIERRE	LOCKNUT	CHIUSURA	ECROU INOX
14	REC12-45176	12-35935	ARANDELA	WASHER	RONDELLA	RONDELLE
15	REC16-59579	16-59579	TORNILLO	SCREW	VITE	VIS
16	RM53-87843	53-87843	CIRCLIP	CIRCLIP	CIRCLIP	CLIPS
17	REC22-861150T02	22-861150A1	RACOR ACEITE	OIL RACORD	RACORDO OLIO	RACCORD HUILE
18	RM22-861163	22-861163	RACOR ACEITE	OIL RACORD	RACORDO OLIO	RACCORD HUILE
19	REC16755Q1	16755Q1	KIT JUNTAS Bravo & BlackhawK	GASKET SET Bravo & BlackhawK	KIT GUARNIZIONE Bravo & BlackhawK	KIT JOINTS Bravo et Blackhawk
20	REC23-861209A1	23-861209A1	KIT RETENES	SHIFT SHAFT BUSING	KIT TENUTE	KIT JOINTS D'HUILE

SOPORTE TRANSOM BRAVO I, II, III | GIMBAL HOUSING RING ASSEMBLY. BRAVO I, II, III | SUPPORTO TRANSOM BRAVO I, II, III | SUPPORT TRANSOM BRAVO I, II, III





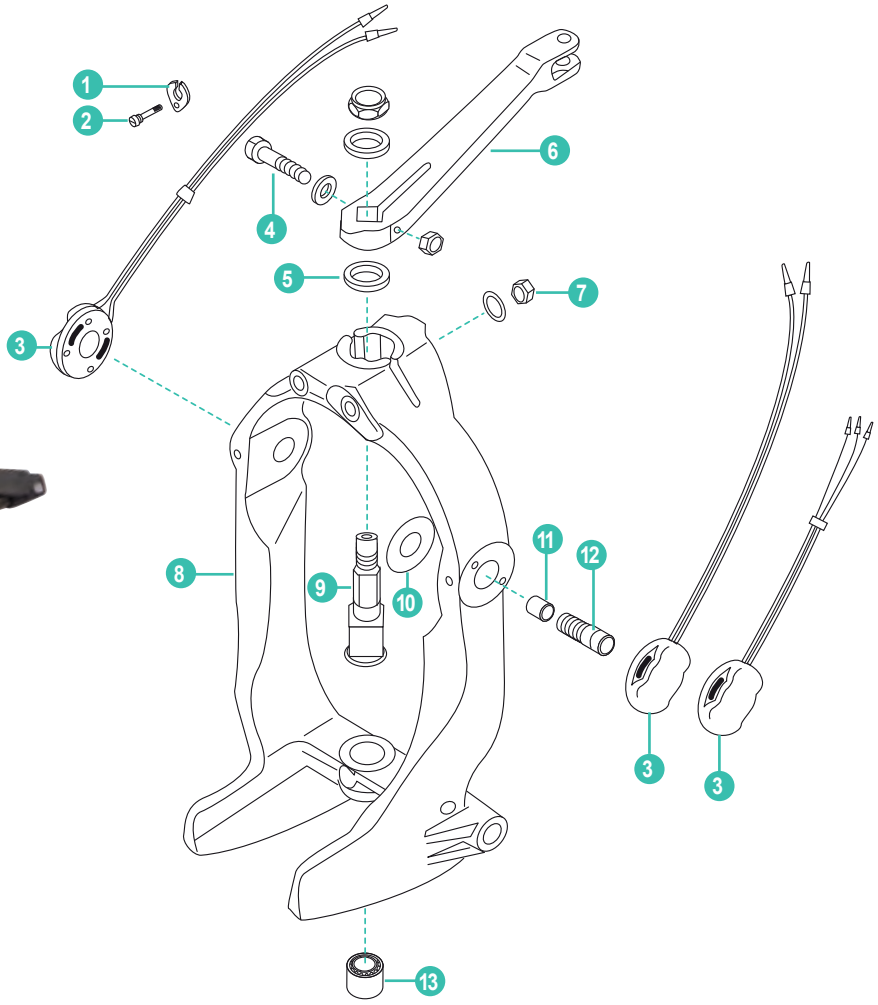

	REF	OEM				
1	RM54-12078	54-12078	ABRAZADERA	CLAMP	FASCETTA	COLLIER
2	RM10-28635	10-28635	TORNILLO SUJECCIÓN	SCREW	VITE	VIS
3	REC805320A03	805320A03	KIT SENSORES TRIM	TRIM SENSOR KIT	KIT SENSORI TRIM	KIT SONDES TRIM
	REC8M0095310	8M0095310	KIT SENSOR TRIM DIGITAL	TRIM SENSOR KIT, DIGITAL	KIT SENSORI TRIM, DIGITAL	KIT SONDES TRIM DIGITAL
4	RM10-807204	10-807204	TORNILLO	SCREW	VITE	VIS
5	RM12-98548	12-98548	ARANDELA	WASHER	RONDELLA	RONDELLE
6	RM866322A01	866322A01	BIELA DIRECCIÓN	LEVER ASSY	BIELLA STERZO	PIVOT DE DIRECTION
7	REC11-862903	11-134371	TUERCA	NUT	DADO	ÉCROU
8	RM8M0062440	8M0062440	SOPORTE TRANSOM	GIMBAL RING ASSEMBLY	SUPPORTO TRANSOM	FOURCHE DE DIRECTION
9	REC98230A1	98230A1	EJE	SHAFT	ASSE	ARBRE
10	RM12-41721	12-41721	ARANDELA	WASHER	RONDELLA	RONDELLE
11	REC23-847637	23-847637	CASQUILLO	BUSING	BOCCOLA	BAGUE
12	REC10-86801	10-86801	TORNILLO (1998+)	SCREW (1998+)	VITE (1998+)	VIS (1998+)
13	RM23-847638	23-847638	COJINETE MAGNUM	BEARING MAGNUM	CUSCINETTO MAGNUM	ROULEMENT MAGNUM
	RM23-99352	23-99352	COJINETE ESTÁNDAR	BEARING STANDARD	CUSCINETTO STANDARD	ROULEMENT STANDARD
14	REC806034A1	866200A01	PISTÓN DIRECCIÓN Moderno (1994+) Plástico	NEWER POWER STEERING PISTON (1994+) Plastic	PISTONE IDRAULICO Moderno (1994+) Plastica	PISTON DIRECTION moderne (1994+) plastique
	RM806034A2	806034A2	PISTÓN DIRECCIÓN (1983-1993) Metálico	OLDER POWER STEERING PISTON (1983-1993) Metalic	PISTONE IDRAULICO vecchio (1983-1993) Metallo	PISTONE DIRECTION ancien (1983-93) Métalique
15	TRANSONBRAVO	6-6211002NZ 6-6311002NZ	TRANSOM COMPLETO	TRANSOM ASSEMBLY	TRANSOM COMPLETO	TRANSOM COMPLET

KITS DE JUNTAS — GASKET SET — KIT GUARNIZIONI — KIT JOINTS

REF	OEM	
REC27-54014Q1	27-54014Q1	TR/TRS

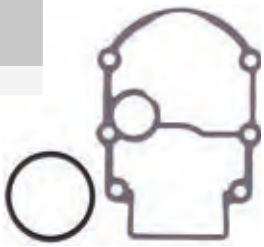

REF	OEM	
REC87580		TR/TRS

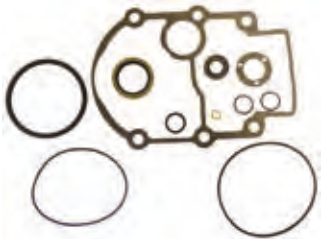

REF	OEM	
REC16755Q1	16755Q1	BRAVO



REF	OEM	
REC27-64818Q4	27-64818Q4	MC1/120 - 260



REF	OEM	
REC27-94996Q2	27-94996Q2	MC1/R/MR Alpha One/Gene II

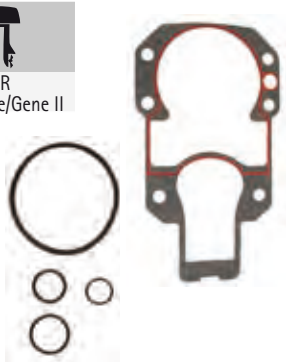

KIT FUELLE — U-JPINT BELLOWS KIT — KIT CUFFIE — KIT SOUFFLET

REF	OEM	
REC60932A4	60932A4	1/R/Alpha One (3469428+)
CEF500516K	60932A1	



REF	OEM	
REC86840A05	8M0062406	Bravo & Blackhawk
CEF500509K	86840A3 86840A05	



REF	OEM	
REC36223A2	36223A2	Colas antiguas Old styles drives
CEF500522K	36223 36223A1	Piedi vecchio Embases anciennes (-3443920)



REF	OEM	
REC816431A1	816431A1	Alpha One Gen II
CEF500515K		



KIT FUELLE CABLE CAMBIO — SHIFT CABLE BELLOW KIT — KIT CUFFIA CAMBIO — KIT SOUFFLET CHANGEMENT

REF	OEM	
REC74639Q02 CEF500513K	74639Q02	ALPHA & BRAVO



CLIP FUELLE | BELLOW CLIP | CLIP CUFFIE | CLIPS

REF	OEM
REC54-86049	54-86049



ABRAZADERA FUELLE CAMBIO | SHIFT CABLE BELLOW CLAMP | FASCETTA CUFFIE CAMBIO | COLLIER SOUFFLET CHANGEMENT

REF	OEM	
REC54-38863	54-38863	REC74639Q02



REF	OEM	
REC54-815504320	54-815504320	REC74639Q02



FUELLE DE ESCAPE | EXHAUST BELLOWS | CUFFIE DI SCARICO | SOUFFLET D'ÉCHAPPEMENT

REF	OEM	
REC78458A1 CEF500520K	78458A1 78458	Bravo I, II & III



REF	OEM	Ø IN.
REC18654A1	18654A1 32734 32734A3	Alpha & Bravo
CEF500512K		



CAMBIO | SHIFT | CAMBIO | CHANGEMENT

CABLE | CABLE | CAVO | CÂBLE

REF	
REC21470	MCM Modelos modernos Newer models Modelo moderno Modeles modernes



REF	OEM	
REC865437A02	865437A02	Bravo I, II, III



REF	OEM	
REC865436A02	865436A02	MCM Modelos modernos Newer models Modello moderno Modeles modernes
RM19543A10	ORIGINAL	

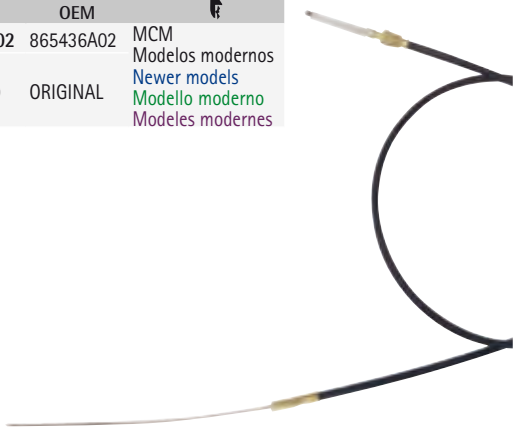

KIT CABLE CAMBIO | SHIFT CABLE ASSY KIT | KIT CAVO CAMBIO | KIT CÂBLES CHANGEMENT

REF	OEM	
REC865436A03		MC1/R/MR/Alpha One/Gene II



REF	OEM	
REC815471T1	815471T1	Bravo I, II, III



GEN I

Mercury, Mercruiser, Mariner

REF	OEM	
PREKM63706	8M0082479	6'/ 1,80 m
PREKM63707	8M0082480	7'/ 2,10 m
PREKM63708	8M0082481	8'/ 2,45 m
PREKM63709	8M0082482	9'/ 2,75 m
PREKM63710	8M0082483	10'/ 3,05 m
PREKM63711	8M0082484	11'/ 3,35 m
PREKM63712	8M0082485	12'/ 3,65 m
PREKM63713	8M0082486	13'/ 3,95 m
PREKM63714	8M0082487	14'/ 4,25 m
PREKM63715	8M0082488	15'/ 4,60 m
PREKM63716	8M0082489	16'/ 4,90 m
PREKM63717	8M0082490	17'/ 5,20 m
PREKM63718	8M0082491	18'/ 5,50 m
PREKM63719	8M0082492	19'/ 5,80 m
PREKM63720	8M0082493	20'/ 6,10 m
PREKM63721	8M0082494	21'/ 6,40 m
PREKM63722	8M0082495	22'/ 6,70 m
PREKM63723	8M0082496	23'/ 7,00 m
PREKM63724	8M0082497	24'/ 7,30 m



GEN II

Mercury 4000 / 4500 GEN II PLATINUM

REF	OEM	
PRE53006	8M0082529	6'/ 1,80 m
PRE53007	8M0082530	7'/ 2,10 m
PRE53008	8M0082531	8'/ 2,45 m
PRE53009	8M0082532	9'/ 2,75 m
PRE53010	8M0082533	10'/ 3,05 m
PRE53011	8M0082534	11'/ 3,35 m
PRE53012	8M0082535	12'/ 3,65 m
PRE53013	8M0082536	13'/ 3,95 m
PRE53014	8M0082537	14'/ 4,25 m
PRE53015	8M0082538	15'/ 4,60 m
PRE53016	8M0082539	16'/ 4,90 m
PRE53017	8M0082540	17'/ 5,20 m
PRE53018	8M0082541	18'/ 5,50 m
PRE53019	8M0082542	19'/ 5,80 m
PRE53020	8M0082543	20'/ 6,10 m
PRE53021	8M0082544	21'/ 6,40 m
PRE53022	8M0082545	22'/ 6,70 m
PRE53023	8M0082546	23'/ 7,00 m
PRE53024	8M0082547	24'/ 7,30 m



3300C

Recorrido trabajo: 76 mm. Travel 3" Estensione: 76 mm Course: 76 mm.
Rosca 10-32" Threaded 10-32" Filetto 10-32" Fil 10-32 "

REF	RO	
PRE3300C05	8M0082577	5' / 1,50 m
PRE3300C06	8M0082578	6' / 1,80 m
PRE3300C07	8M0082579	7' / 2,10 m
PRE3300C08	8M0082580	8' / 2,45 m
PRE3300C09	8M0082581	9' / 2,75 m
PRE3300C10	8M0082582	10' / 3,05 m
PRE3300C11	8M0082583	11' / 3,35 m
PRE3300C12	8M0082584	12' / 3,65 m
PRE3300C13	8M0082585	13' / 3,95 m
PRE3300C14	8M0082586	14' / 4,25 m
PRE3300C15	8M0082587	15' / 4,60 m
PRE3300C16	8M0082588	16' / 4,90 m
PRE3300C17	8M0082589	17' / 5,20 m
PRE3300C18	8M0082590	18' / 5,50 m
PRE3300C19	8M0082591	19' / 5,80 m
PRE3300C20	8M0082592	20' / 6,10 m
PRE3300C21	8M0082593	21' / 6,40 m
PRE3300C22	8M0082594	22' / 6,70 m
PRE3300C23	8M0082595	23' / 7,00 m
PRE3300C24	8M0082596	24' / 7,30 m

REF	RO	
PRE3300C25	8M0082597	25' / 7,60 m
PRE3300C26	8M0082598	26' / 7,90 m
PRE3300C27	8M0082599	27' / 8,25 m
PRE3300C28	8M0082600	28' / 8,55 m
PRE3300C29	8M0082601	29' / 8,85 m
PRE3300C30	8M0082602	30' / 9,15 m
PRE3300C31	8M0082603	31' / 9,50 m
PRE3300C32		32' / 9,75 m
PRE3300C33		33' / 10,00 m
PRE3300C34	8M0082604	34' / 10,35 m
PRE3300C35		35' / 10,65 m
PRE3300C36	8M0082605	36' / 11,00 m
PRE3300C38	8M0082606	38' / 11,50 m
PRE3300C40		40' / 12,10 m
PRE3300C42		42' / 12,70 m
PRE3300C44		44' / 13,30 m
PRE3300C46		46' / 14,00 m
PRE3300C48		48' / 14,50 m
PRE3300C50		50' / 15,00 m

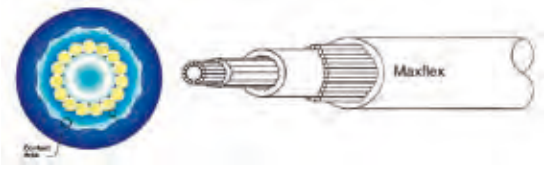



REF
PRE30107
PRE30212



PRE30107



PRE30212

ACTUADOR CAMBIO ELECTRÓNICO | DIGITAL SHIFT ACTUATOR | ATTUATORE DEL CAMBIO | ACTIONNEUR DE CHANGEMENT

REF	OEM	GAS	DIESEL
REC879194T46	879194T46	3.0, 8.1, 8.2 496MAG, 5.0, 5.7, 6.2, 4.5	TDI 4.2 CMD QSD 2.0 CMD QSD 2.8 CMD QSD 4.2 2.0LEI/ES



EJE CABLE CAMBIO SUPERIOR | UPPER SHIFT SHAFT | ALBERINO SUPERIORE CAMBIO | ARBRE SUPERIEUR

REF	OEM	
REC45589A3	45589A3	MC-1/R/MR/Alpha One



REF	OEM	
REC816685	816685	Alpha One Gen II



REF	OEM	
REC12711	12711	Bravo I, II & III



EJE CABLE CAMBIO INTERMEDIO | INTERMEDIATE SHIFT SHAFT | ALBERINO INTERMEDIO CAMBIO | ARBRE INTERMÉDIAIRE DE CHANGEMENT

REF	OEM	
REC621041	621041	MC-1/R/MR/Alpha One



TORNILLO | SCREW | VITE | VIS

REF	OEM	
REC10-45590	10-45590	MC-1 / R / MR Alpha One / Gen II
REC10-31700	10-31700	


REC10-45590


REC10-31700

PASADOR | PIN | SPINOTTO | PIN

REF	OEM	
REC45518A3	45518A3	MC-1 / R / MR Alpha One / Gen II



KIT CAMBIO | SHIFT LEVER KIT | KIT CAMBIO | KIT CHANGEMENT

REF	OEM	
REC45518T1	45518T1	MC-1/R/MR Alpha One / Gen II



ACOPLE CABLE | CABLE SLIDE | ACCOPPIO CAVO | KIT ATTACHE CABLE

REF	OEM	
REC8507522	8507522	MC-1 / R / MR Alpha One / Gen II



KIT RETÉN — SEAL KIT — KIT TENUTE — KIT JOINTS D'HUILE

REF	OEM	
REC23-806036A1	23-806036A1	Alpha One Gen II (F094775+)



REF	OEM	
REC23-805041A2	23-805041A2	MC-1 / R/ MR Alpha One / Gen II



REF	OEM	
REC23-861209A1	23-861209A1	Bravo I, II & III



GUÍA CABLE — CABLE GUIDE — GUIDA CAVO — GUIDE CÂBLE

	REF	OEM
KIT	REC02644	
ANCLAJE CABLE CABLE ANCHOR FERMA CAVO ANCRAGE CÂBLE	REC43436	43436
TORNILLO SCREW VITE VIS	REC10-20518	10-20518



REC02644



REC43436



REC10-20518

SOPORTE MOTOR — ENGINE MOUNT SCREW — SUPPORTI MOTORE — SUPPORT MOTEUR

REF	OEM	
GS38105	814263A1	19 mm = 3/4"
GS38122	35852	16 mm = 5/8"

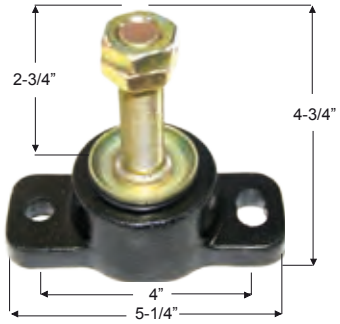

ACOPLAMIENTOS MOTOR — ENGINE COUPLER ASSEMBLIES — ACCOPPIAMENTO MOTORE — ACCOUPLEMENT MOTEUR

REF	OEM	
REC69354A2	69354A2	470, 485 (42208730-6218036) (1976-82)



REF	OEM	
REC861523A9	861523A9	5.7, 7.4, 454 Magnum & 502 BRAVO



REF	OEM	
REC97432A2	97432A2	165, 170, 470,180, 190, 488, 3.7LX, 3.7L (6170297+) (1983-89)



REF	OEM	
REC59826A3	59826A3	FORD



Se usa en todos los Chevys antiguos en los que el retén trasero del cigüeñal es de dos piezas.

Used on all older Chevy engines with 2 piece rear main seals.

Si usa in tutti i Chevy vecchio con paraolio posteriore in 2 pz. 4 cil V6 e V8.

Utilisé sur toutes les anciennes Chevy où le joint arrière du vilebrequin est en deux parties.

REF	OEM	
REC76850A2	76850A2	GM MR / ALPHA / BRAVO



Utilizado al reemplazar V6 o V8, 2 piezas de retén trasero con perno de cigüeñal de 3 1/2", retén trasero de 1 pieza con perno de 3".

Used when replacing V6 or V8, 2 pieces rear main seal with 3 1/2" crankshaft bolt pattern to a newer 1 piece rear main seal engine with 3" bolt pattern.

Utilizzto per sostituire V6 o V8, paraolio posteriore in 2 pezzi con perno dell'albero motore con 3 1/2", perno posteriore de 1 pezzo da 3".

Utilisé lors du remplacement d'un V6 ou d'un V8, support arrière en 2 pièces avec boulon de vilebrequin de 3 1/2", support arrière en 1 pièce avec boulon de 3".

REF	OEM	
REC14505A2	14505A2	V6, V8



REF	OEM	
REC18643A7	18643A7	V6 & V8 Con volante grande 14" For engines with 14" flywheel Con volano grande 14" Avec volant grand 14"



REF	OEM	
REC12632A7	12632A7	4L Con volante pequeño 12 3/4" For engines with 12 3/4" flywheel Con volano piccolo 12 3/4" Avec volant petit 12 3/4"



SILEMBLOCK

REF	OEM				
REC23-99322	23-99322	ESPACIADOR	SPACER	DISTANZIALE	CALE
REC23-99299	23-99299	ESPACIADOR	SPACER	DISTANZIALE	CALE
REC12-32834	12-32834	ARANDELA FIBRA	FIBRE WASHER	RONDELLA FIBRA	RONDELLE FIBRE
REC12-35777	12-35777	ARANDELA	WASHER	RONDELLA	RONDELLE
REC10-97934	10-97934	TORNILLO	SCREW	VITE	VIS
REC11-863332	11-863332	CIERRE	LOCK	CHIUSSURA	ÉCROU
REC13-33734	13-33734	MUELLE	SPRING	MOLLA	RESSORT



REC23-99322



REC23-99299



REC12-32834



REC12-35777



REC11-863332



REC13-33734



REC10-97934

KITS SILEMBLOCK

REF	OEM
REC865329A02	865329A02



REF	OEM
REC10-97934A1	10-97934A1



REF	OEM
REC21811	



POWER TRIM

120-140-165-228-250-260-470-485-888-898

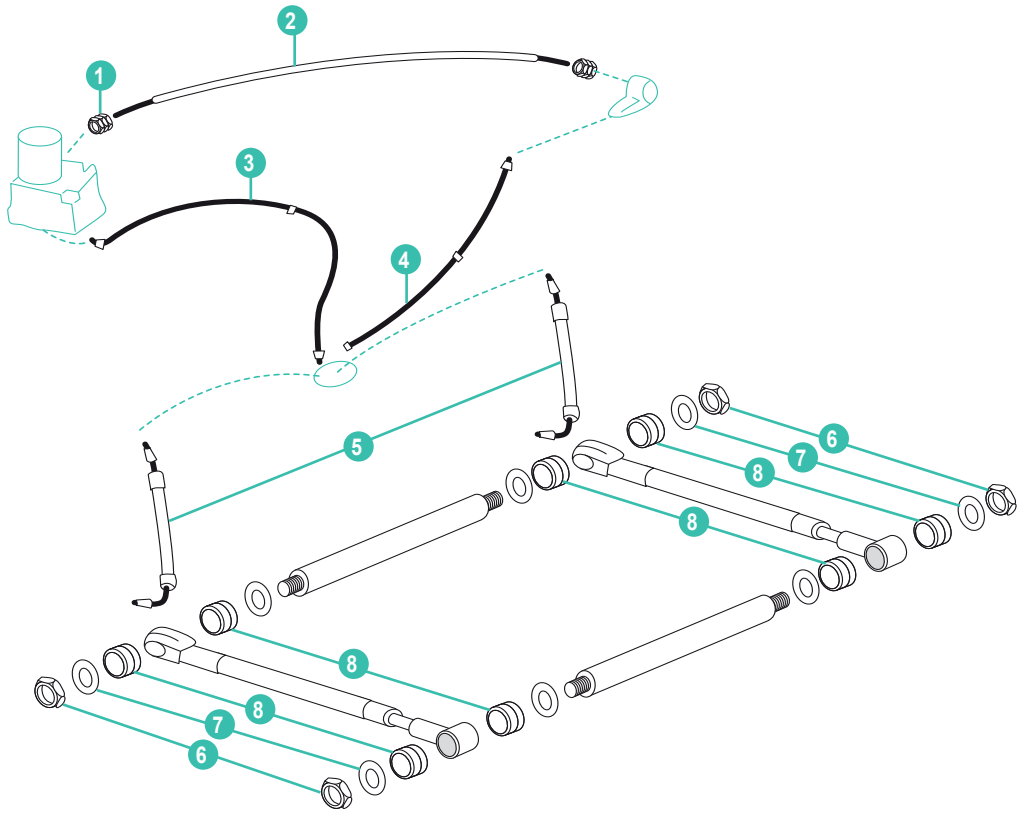

9



REF
REC23-806036A1

10



REF	EJE RAM ASSE ARBRE
REC21390	19 cm
REC21310	26 cm



	REF	OEM				
1	RM22-49718	22-49718	TUERCA TUBO	NUT HOSE	DADO TUBO	ÉCROU
2	REC32-58432A2	32-58432A2	LATIGUILLO TRIM (V8)	TRIM HOSE ASSEMBLY (V8)	TUBO TRIM (V8)	FLEXIBLE DE VÉRIN DE TRIM (V8)
3	REC32-55816	33-55816	LATIGUILLO TRIM (INLINE)	TRIM HOSE (INLINE)	TUBO TRIM (INLINE)	FLEXIBLE DE VÉRIN DE TRIM (INLINE)
	REC32-59841	32-59841	LATIGUILLO TRIM (Conector --> bomba) V8	TRIM HOSE (Connector --> pump) V8	TUBO TRIM (Connettore --> pompa) V8	FLEXIBLE DE VÉRIN DE TRIM (Conecteur --> pompe) V8
4	REC32-59842	32-59842	LATIGUILLO TRIM	TRIM HOSE	TUBO TRIM	FLEXIBLE DE VÉRIN DE TRIM
5	REC32-86036	32-86036	LATIGUILLO TRIM	TRIM HOSE	TUBO TRIM	FLEXIBLE DE VÉRIN DE TRIM
6	REC11-862903	82671013	TUERCA ACERO INOX	LOCK NUT	DADO ACCIAIO INOX	ÉCROU INOX
7	REC12-46765	12-46765	ARANDELA	WASHER	RONDELLA	RONDELLE
8	REC23-89574	23-89574	ADAPTADOR GOMA	POWER TRIM RAM BUSHING	ADATTATORE IN GOMMA	BAGUE POWER TRIM
9	REC21990		KIT REPARACIÓN CILINDRO POWER TRIM 120, 140, 160, 165, 888, 898, 228, 225-S, 233, 250, 260, 470, 485	POWER TRIM CYLINDER SERVICE KIT 120, 140, 160, 165, 888, 898, 228, 225-S, 233, 250, 260, 470, 485	KIT RIPARAZIONE CILINDRO POWER TRIM 120, 140, 160, 165, 888, 898, 228, 225-S, 233, 250, 260, 470, 485	KIT REPARATION VERIN DE TRIM 120, 140, 160, 165, 888, 898, 228, 225-S, 233, 250, 260, 470, 485
10	REC21390		KIT EJE SUJECCIÓN POWER TRIM para colas antiguas con gruesos pequeños en el eje de sujección delantero. MC1 120-260	POWER TRIM RAM BUSHING KIT for front anchor pin on early mercruisers with small rubber bushings. MC1 120-260	KIT POWER TRIM. per vecchie piedi con piccoli spessori sull'asse di fissaggio anteriore MC1 120-260	KIT AXE VERIN DE TRIM, pour les vieilles embases avec de petites épaisseurs sur l'essieu avant. MC1 120-260
	REC21310					

R/MR/ALPHA ONE (1983-90)

18



REF
REC8M0080805

19



REF
REC87399A2

20



REF
REC88035

21



REF	EJE RAM ASSE ARBRE
REC21380	23 cm
REC21370	30 cm



P. 27

	REF	OEM				
1	REC32-861128	32-861128	LATIGUILLO TRIM (-OW099999)	TRIM HOSE (-OW099999)	TUBO TRIM (-OW099999)	FLEXIBLE DE TRIM (-OW099999)
2	REC32-861127	32-861127	LATIGUILLO TRIM (-OW099999)	TRIM HOSE (-OW099999)	TUBO TRIM (-OW099999)	FLEXIBLE DE TRIM (-OW099999)
3	REC32-99904	32-99904Q	LATIGUILLO TRIM	TRIM HOSE	TUBO TRIM	FLEXIBLE DE TRIM
4	REC8M0080805	8M0080805	KIT CONECTOR	TRIM CONNECTOR KIT	KIT CONNETTORE	KIT CONNECTEUR
5	REC32-864589	32-864589	LATIGUILLO PARA REC98704A3	TRIM HOSE FOR REC98704A3	TUBO TRIM PER REC98704A3	FLEXIBLE DE TRIM pour REC98704A3
	REC32-864960	32-864960	LATIGUILLO PARA REC14034A3	TRIM HOSE FOR REC14034A3	TUBO TRIM PER REC14034A3	FLEXIBLE DE TRIM pour REC14034A3
6	REC17-14873A1	17-14873A1	KIT EJE SUJECCION (30 cm)	RAM BUSHING KIT (30 cm)	KIT ASSE (30 cm)	KIT ARBRE FIXATION VERIN (30 cm)
7	REC12-85058	12-85058	ARANDELA	WASHER	RONDELLA	RONDELLE
8	REC23-99291	23-99291T	ADAPTADOR GOMA	BALL GEAR NUT	ADATTATORE IN GOMMA	BAGUE
9	REC32-864588	32-864588	LATIGUILLO para REC98703A3	TRIM HOSE for REC98703A3	TUBO TRIM per REC98703A3	FLEXIBLE DE TRIM pour REC98704A3
	REC32-864959	32-864959	LATIGUILLO para REC14035A3	TRIM HOSE for REC14035A3	TUBO TRIM per REC14035A3	FLEXIBLE DE TRIM pour REC14034A3
10	REC10-85486	10-85486	TORNILLO	SCREW	VITE	VIS
11	REC85060	85060	SUJECCIÓN TUBO	PLATE	SUPPORTO TUBO	PLAQUE SUPPORT
12	REC98704A3	98704A3	BRAZO TRIM ESTRIBOR (395 mm)	TRIM CYLINDER STBD (395 mm)	PISTONE TRIM TRIBORDO (395 mm)	VERIN DE TRIM TRIBORD (395 mm)
	REC14034A3	14034A3	BRAZO TRIM ESTRIBOR (411 mm) Negro	TRIM CYLINDER STBD (411 mm) Black	PISTONE TRIM TRIBORDO (411 mm) Nero	VERIN DE TRIM TRIBORD (411 mm) Noir
13	REC17-14872A1	17-14872A1	KIT EJE SUJECCION (23 cm)	RAM BUSHING KIT (23 cm)	KIT ASSE SOGGEZIONE (23 cm)	KIT ARBRE FIXATION (23 cm)
14	REC98703A3	98703A3	BRAZO TRIM BABOR (395 mm)	TRIM CYLINDER PORT (395 mm)	PISTONE TRIM BABORDO (395 mm)	VERIN DE TRIM BABORD (395 mm)
	REC14035A3	14035A3	BRAZO TRIM BABOR (411 mm) Negro	TRIM CYLINDER PORT (411 mm) Black	PISTONE TRIM BABORDO (411 mm) Nero	VERIN DE TRIM BABORD (411 mm) Noir
15	REC12-44163	12-44163	ARANDELA	WASHER	RONDELLA	RONDELLE
16	REC11-34933	11-859116	TUERCA ACERO INOX	LOCK NUT	DADO ACCIAIO INOX	ÉCROU INOX
17	REC19-14842	19-14842	TAPA PLÁSTICO	CAP	COPERCHIO IN PLASTICA	COUVERCLE PLASTIQUE
18	REC8M0080805	8M0080805	KIT CONECTOR TRIM	TRIM CONNECTOR KIT	KIT CONNETTORE TRIM	KIT CONNECTEUR TRIM
19	REC87399A2	87399A2	KIT REPARACIÓN TRIM (Alpha one Gen I)	POWER TRIM CYLINDER OVERHAUL KIT (Alpha one Gen I)	KIT RIPARAZIONE CILINDRO (Alpha one Gen I)	KIT REPARACION TRIM (Alpha one Gen I)
20	REC88035	88035	TAPÓN CILINDRO POWER TRIM Ø 52,8 mm (EXT)	POWER TRIM RAM END CAP Ø 52,8 mm (EXT)	TAPPO CILINDRO POWER TRIM Ø 52,8 mm (EXT)	COUVERCLE VERIN DE TRIM Ø Ext. 52,8 mm
21	REC21380	17-14872A1	KIT EJE SUJECCIÓN para colas con gruesos grandes en ejes de sujección	POWER TRIM RAM BUSHING KIT for rear anchor pin with large rubber bushings	KIT ASSE POWER TRIM per code con grandi spessori sugli alberi	KIT D'ARBRE DE SERRAGE pour les embase de grandes épaisseurs sur les arbres de serrage
	REC21370	17-14873A1				

Para saber la referencia del pistón debemos revisar el nº grabado en el brazo

Number on cylinder must be checked in order to know piston reference

Per sapere il codice del pistone bisogna verificare il nº stampigliato.

Pour connaître la référence du piston, il faut vérifier le numéro gravé sur le bras.

ALPHA ONE GEN II (1991+)

19



REF
REC8M0080805

20



REF
REC806191T

21



REF
REC87399A3

22



REF
REC87399A3

23



REF
REC17-8M0065070

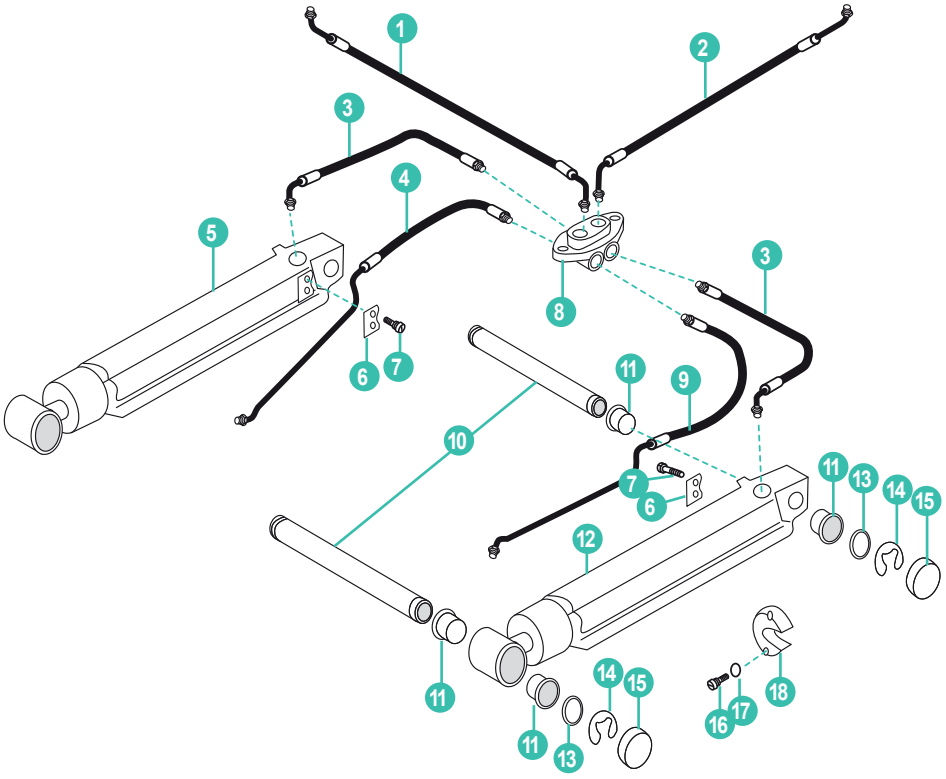



	REF	OEM				
1	REC32-861127	32-861127	LATIGUILLO TRIM (-0W099999) Negro	TRIM HOSE (-0W099999) Black	TUBO TRIM (-0W099999) Nero	FLEXIBLE DE TRIM (-0W099999) Noir
2	REC32-861128	32-861128	LATIGUILLO TRIM (-0W099999) gris	TRIM HOSE (-0W099999) Grey	TUBO TRIM (-0W099999) Grigio	FLEXIBLE DE TRIM (-0W099999) gris
3	REC32-99904	32-99904Q	LATIGUILLO TRIM	TRIM HOSE	TUBO TRIM	FLEXIBLE DE TRIM
4	REC32-864959	32-864959	LATIGUILLO TRIM	TRIM HOSE	TUBO TRIM	FLEXIBLE DE TRIM
5	REC815935A7	815935A7	CILINDRO TRIM BABOR	TRIM CYLINDER PORT	CILINDRO TRIM SINISTRO	VERIN DE TRIM BABORD
6	REC85060	85060	SUJECCIÓN TUBO	PLATE	SUPPORTO TUBO	PLAQUE SUPPORT
7	REC10-85486	10-85486	TORNILLO (.250 -20x.380)	SCREW (.250 -20x.380)	VITE (.250 -20x.380)	VIS (.250 -20x.380)
8	REC8M0080805	8M0080805	KIT CONECTOR	TRIM CONNECTOR KIT	KIT CONNETTORE TRIM	KIT CONNECTEUR TRIM
9	REC32-864960	32-864960	LATIGUILLO TRIM	TRIM HOSE	TUBO TRIM	FLEXIBLE DE TRIM
10	REC17-815953A01	17-815953A01	EJE	UPPER SHIFT SHAFT	ASSE	ARBRE
11	REC23-8159501	23-8159501	CASQUILLO	POWER TRIM RAM BUSHING	BOCCOLA	BAGUE DE VÉRIN
12	REC815954A7	815954A7	CILINDRO TRIM ESTRIBOR	TRIM CYLINDER STBD	CILINDRO TRIM DESTRO	VERIN DE TRIM TRIBORD
13	REC12-815952	12-815952	ARANDELA	WASHER	RONDELLA	RONDELLE
14	REC53-815949	53-815949	CIERRE METÁLICO	E-RING	CHIUSURA METALLICA	ÉCROU METAL.
15	REC19-815951	19-815951	TAPA PLÁSTICO	PLASTIC CAP	COPERCHIO IN PLASTICA	COUVERCLE PLASTIQUE
16	REC10-806290	10-806290	TORNILLO	SCREW	VITE	VIS
17	REC304454	13-69432	ARANDELA	WASHER	RONDELLA	RONDELLE
18	CM806189 CM806189A	806189Q1 806189Q1	ÁNODO ZN ÁNODO AL	ZN ANODE AL ANODE	ANODO ZN ANODO AL	ANODE ZN ANODE AL
19	REC8M0080805	8M0080805	KIT CONECTOR TRIM	TRIM CONNECTOR KIT	KIT CONNETTORE TRIM	K KIT CONNECTEUR TRIM
20	REC806191T	806191T	TAPÓN CILINDRO POWER TRIM Ø 48 MM (EXT)	POWER TRIM RAM END CAP Ø 48 MM (EXT)	TAPPO CILINDRO POWER TRIM Ø 48 MM (EXT)	COUVERCLE VERIN DE TRIM Ø Ext. 48 mm
21	REC87399A3	87399A3	KIT REPARACIÓN TRIM	POWER TRIM CYLINDER OVERHAUL KIT	KIT RIPARAZIONE TRIM	KIT REPARACION TRIM
22	REC25-87400A2	25-87400A2	KIT RETENES	POWER TRIM SEAL KIT	KIT TENUTE	KIT JOINTS D'HUILE
23	REC17-8M0065070		KIT EJE SUJECCIÓN	POWER TRIM RAM BUSHING KIT	KIT SUPPORTO	KIT D'ARBRE DE SERRAGE

BRAVO

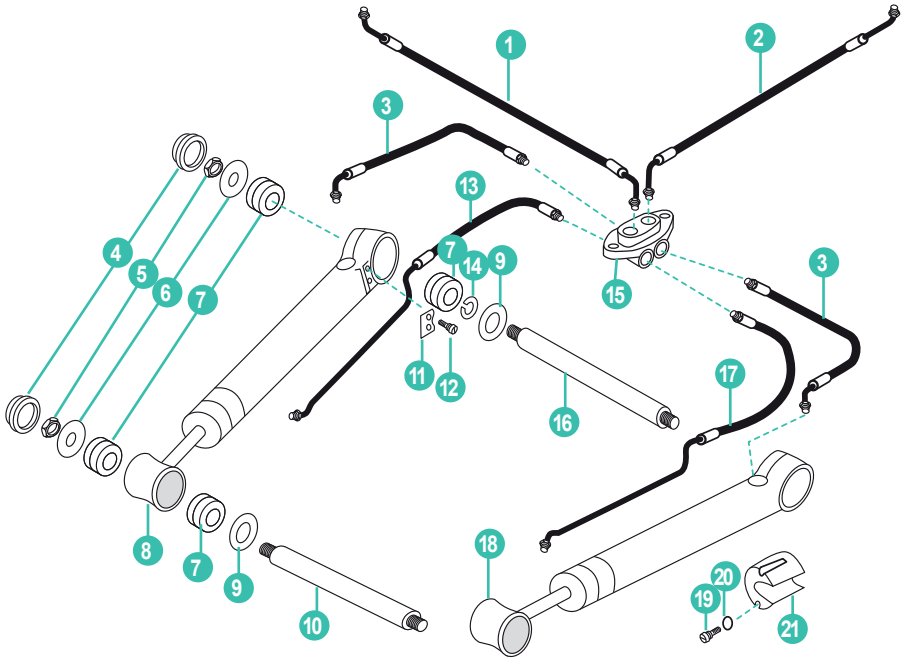

22



REF
REC8M0080805

23



REF
REC806191T

24



REF
REC87399A2

25



REF
REC25-87400A2

26



REF
REC14-44166T1

27



REF
REC21920

	REF	OEM				
1	REC32-861127	32-861127	LATIGUILLO (-0W099999) Negro	TRIM HOSE (-0W099999) Black	TUBO TRIM (-0W099999) Nero	FLEXIBLE DE TRIM (-0W099999) Noir
2	REC32-861128	32-861128	LATIGUILLO (-0W099999) gris	TRIM HOSE (-0W099999) Grey	TUBO TRIM (-0W099999) Grigio	FLEXIBLE DE TRIM (-0W099999) gris
3	REC32-99904	32-99904Q	LATIGUILLO TRIM	TRIM HOSE	TUBO TRIM	FLEXIBLE DE TRIM
4	REC19-14842	19-14842	TAPA PLÁSTICO	PLASTIC CAP	COPERCHIO IN PLASTICA	COUVERCLE PLASTIQUE
5	REC11-34933	11-859116	TUERCA INOX	LOCK NUT	DADO INOX	ÉCROU INOX
6	REC12-44163	12-44163	ARANDELA	WASHER	RONDELLA	RONDELLE
7	REC23-807073	23-807073	ADAPTADOR GOMA P.T.	P.T. RAM BUSHING	ADATTATORE GOMMA	BAGUE POWER TRIM
8	REC98703A26	98703A26	PISTÓN TRIM BABOR	TRIM CYLINDER PORT	PISTONE TRIM SINISTRO	VERIN DE TRIM BABORD
9	REC12-44164	12-44164	ARANDELA	WASHER	RONDELLA	RONDELLE
10	REC17-44166	17-44166	EJE SUJECCIÓN TRIM	ANCHOR PIN	ASSE TRIM	ARBRE
11	REC85060	85060	SUJECCIÓN TUBO	PLATE	SUPPORTO TUBO	PLAQUE SUPPORT
12	REC10-85486	10-85486	TORNILLO	SCREW	VITE	VIS
13	REC32-864588	32-864588	LATIGUILLO TRIM	TRIM HOSE	TUBO TRIM	FLEXIBLE DE TRIM
14	REC53-805272	53-805272	ARO RETENEDOR	RETAINING RING	ANELLO BLOCCANTE	CLIPS
15	REC8M0080805	8M0080805	KIT CONECTOR	TRIM CONNECTOR KIT	KIT CONNETTORE	KIT CONNECTEUR
16	REC17-44167A1	17-44167A1	EJE SUJECCIÓN TRIM	ANCHOR PIN	ASSE SUPPORTO TUBO	ARBRE FIXATION VERIN DE TRIM
17	REC32-864589	32-864589	LATIGUILLO TRIM	TRIM HOSE	TUBO TRIM	FLEXIBLE DE TRIM
18	REC98704A26	98704A26	PISTÓN TRIM ESTRIBOR	TRIM CYLINDER STBD	PISTONE TRIM DESTRO	VERIN DE TRIM TRIBORD
19	REC10-806290	10-806290	TORNILLO	SCREW	VITE	VIS
20	REC304454	13-69432	ARANDELA	WASHER	RONDELLA	RONDELLE
21	CM806190 CM806190A	806190A1 806190A1	ÁNODO ZN ÁNODO AL	ZN ANODE AL ANODE	ANODO ZN ANODO AL	ANODE ZN ANODE AL
22	REC8M0080805	8M0080805	KIT CONECTOR TRIM	TRIM CONNECTOR KIT	KIT CONNETTORE TRIM	KIT CONNECTEUR
23	REC806191T	806191T	TAPÓN CILINDRO Ø 48 MM (EXT)	RAM END CAP Ø 48 MM (EXT)	TAPPO CILINDRO Ø 48mm (EXT)	NEZ DE VERIN Ø 48mm (ext.)
24	REC87399A2	87399A2	KIT REPARACIÓN TRIM	POWER TRIM CYLINDER OVERHAUL KIT	KIT RIPARAZIONE TRIM	KIT REPARATION VERIN
	REC25-87400A2	25-87400A2	KIT RETENES	POWER TRIM SEAL KIT	KIT TENUTE	KIT JOINTS DE VÉRIN
25	REC14-44166T1	17-44166T1	KIT EJE SUJECCIÓN TRASERO	POWER TRIM RAM BUSHING KIT (REAR)	KIT ASSE POSTERIORE	KIT ARBRE FIXATION VERIN DE TRIM (arrière)
26	REC21920		KIT EJE SUJECCIÓN DELANTERO	POWER TRIM RAM BUSHING KIT (FRONT)	KIT ASSE ANTERIORE	KIT AXE VERIN DE TRIM (front)

LATIGUILLOS POWER TRIM — POWER TRIM HOSES — TUBI POWER TRIM — FLEXIBLE DE POWER TRIM

REF	OEM	A + B		
REC32-864960	32-99902-1 32-864960	1/8"	11 1/2" + 14"	MCM 120-260 & BRAVO
REC32-864589	32-99902 32-864589			

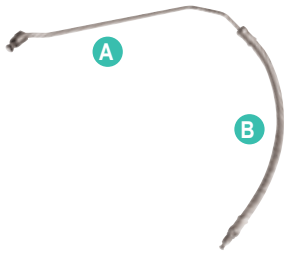

REF	OEM	A + B		
REC32-864959	32-99903-1 32-864959	1/8"	11 1/2" + 14"	MCM 120-260 & BRAVO 1/8"
REC32-864588	32-99903 32-864588			



REF	OEM			
REC32-861127	32-861127 32-95858	1/8"	46"	R / MR / ALPHA GEN II BRAVO I, II, III / BRAVO X, XR, XZ (-0W099999) sin conectores rápidos without quick connect fittings senza connettori rapidi sans connecteurs rapides
REC32-861128	32-861128 32-95859		51"	



REF	OEM	A + B	
REC32-87234	32-87234	1/8"	11 1/2" + 14"

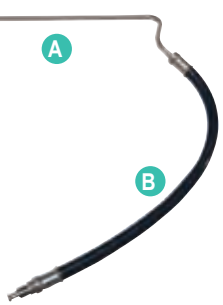

REF	OEM	A + B	
REC32-87235	32-87235	1/8"	11 1/2" + 14"

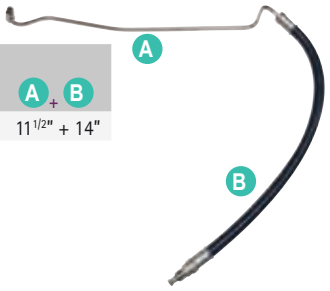

REF	OEM		
REC32-86036	32-86036 32-86036Q	1/8"	14"



REF	OEM		
REC32-99904	32-99904	1/8"	15"



REF	OEM		
REC32-55816	32-55816	1/8"	21"



REF	OEM		
REC32-59842	32-59842	1/8"	32"



REF	OEM		
REC32-59841	32-59841	1/8"	51"



REF	OEM
REC32-58432A2	32-58432A2



EXTRACTOR TAPONES DE TRIM | TRIM PLUGS EXTRACTOR | ESTRATTORE PER TAPPI DI TRIM | KIT EXTRACTEUR

new

REF	
RECTOOLTRIMKIT	RECTOOLTRIM1 + RECTOOLTRIM2 + RECTOOLTRIM 3



REF					A	
RECTOOLTRIM1	1/2"	+	RECPIN4	+ RECPIN4.5	38 mm	Mercruiser Alpha One & Bravo Trim Cylinders
RECTOOLTRIM2	1/2"	+	RECPIN4	+ RECPIN4.5	32 mm	
RECTOOLTRIM3	1/2"	+	RECPIN6		35 mm	

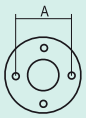

KITS DE RECAMBIO | SPARE KITS | KIT DI RICAMBIO | KIT DE RECHANGE

Los pines de repuesto no tienen garantía.

Replacement pins are not guaranteed.

I perni di ricambio non sono garantiti.

Les pins de remplacement ne sont pas garanties

REF	
RECPIN4	3 PIN x 4 mm
RECPIN4.5	3 PIN x 4.5 mm
RECPIN6	3 PIN x 6 mm



HERRAMIENTAS | TOOLS | ATTREZZI | OUTILS

EXTRACTOR COJINETES Y HÉLICES | PROP AND BEARING PULLER | ESTRATTORE CUSCINETTI E ELICHE | EXTRACTEUR DE ROULEMENTS ET D'HELICE

REF
REC90095

recmar



Para hélices y cojinetes antiguos
For prop and old style bearing carrier.
Per eliche e cuscinetti vecchi.
Pour hélices et roulements anciens



Para cojinetes modernos
For new style bearing carrier.
Per cuscinetti moderni.
Pour roulements récents.



EXTRACTOR COJINETES | BEARING PULLER | ESTRATTORE CUSCINETTI | EXTRACTEUR DE ROULEMENTS

REF
REC91-34569A1

recmar



REF	OEM	
REC91-36569T	91-36569T	MC-I, R-MR, Alpha One.



EXTRACTOR PIÑONES Y COJINETES | UNIVERSAL PULLER PLATE | ESTRATTORE PIGNONE E CUSCINETTI | EXTRACTEUR PIGNONS ET ROULEMENTS

REF	PIÑONES BEARINGS PIGNONE PIGNONS
REC91-00001	30-50 mm / $1^{1/4}$" - $2^{1/4}$"
REC91-00002	50-75 mm / $2^{1/4}$" - $3^{1/2}$"
REC91-37241	75-105 mm / 3" - $4^{1/2}$"

recmar



KIT HERRAMIENTAS PARA COLAS / GEAR CASE TOOL KIT / KTI ATTREZZI PIEDI / KIT OUTILS POUR EMBASES

REF
RM91-31229A7

RECMAR



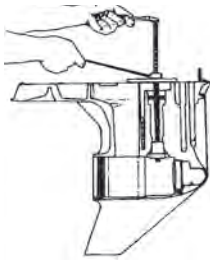

LLAVE TUERCA DIÁBOLO / BEARING CARRIER RETAINER WRENCH / CHIAVE PER CUSCINETTO / CLE POUR ECROU DE DIABOLO

REF
REC91-61069T

RECMAR

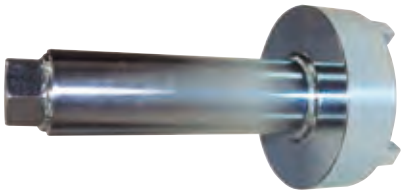

KIT LLAVE HÉLICE / PROP WRENCH KIT / KIT CHIAVE ELICA / CLE POUR ECROU D'HELICE

REF		
REC91-859046Q4	1 1/16"	75 - 300 HP



RECMAR

new

FLOTANTE | FLOATING | GALLEGGIANTE | FLOTTANTE

REF		
REC91-859046Q3	15/16"	30, 40, 50 & 60 HP

RECMAR



LLAVE TUERCA EJE VERTICAL / PINION NUT ADAPTOR KIT / CHIAVE DADO ASSE VERTICALE / CLE POUR ARBRE VERTICAL

Incluye un adaptador eje. Sostiene la tuerca del piñón cuando se está sacando el piñón y el eje en las colas.

Holds pinion nut when removing pinion gear and drive shaft on drive units. Comes with drive shaft adaptor.

Include un adattatore albero. Tenendo il dado del pignone quando si rimuove la ruota dentata e l'albero nel piede.

Inclus un adaptateur d'arbre. Maintient l'écrou du pignon lors de la dépose du pignon et de l'axe sur les embases.

REF
REC91-61067A04

RECMAR



Para montaje y desmontaje del retenedor y cojinete superior en colas.

Removes and installs threaded bearing retainer on stern drives.

Per il montaggio e lo smontaggio del fermo di ritegno e del cuscinetto superiore dei piedi.

Pour le montage et le démontage de la retenue et du palier supérieur dans les embases

REF	OEM
REC91-43506T	91-43506T



EXTRACTOR POLEA BOMBA DE DIRECCIÓN / PULLEY REMOVER, DRIVE PUMP / RIMOZIONE PULEGGIA, POMPA STERZO / EXTRACTEUR DE POULIE POMPE DE DIRECTION

new

REF
REC91-25034



LLAVE ESTRIDADO EJE / PROP SHAFT ADAPTOR / CHIAVE ASSE STRIATO / CLE POUR ARBRE D'HELICE

Da una superficie de llave para girar el eje de la hélice en las colas.

Provides a wrench surface to turn the propeller.

Fornisce una superficie di chiave per ruotare l'asse del propulsore nel piede.

Fournit une surface de clé pour faire tourner l'arbre d'hélice sur les embases.

REF	OEM	
REC91-56775T	91-56775T	MC-I, R-MR, TRS, Alpha One & Gene II.
REC91-61077T	91-61077T	



REC91-61077T



REC91-56775T

EXPANSOR DE FUELLES / BELLOWS EXPANDER TOOL / ATTREZZO PER CUFFIE / OUTIL DE MONTAGE SOUFFLETS

REF	OEM	
REC91-45497A1	91-45497A1	MC-1/R/MR Alpha One/Alpha One Gen II Bravo, & Blackhawk



ÚTIL INSTALACIÓN ANILLO DE FUELLE / BELLOWS RING INSTALLATION TOOL / STRUMENTO PER L'INSTAL. DELL'ANELLO DEL SOFFIETTO / OUTIL D'INSTALLATION DE L'ANNE DE SOUFFLET

REF	OEM	
REC91-818162	91-818162	Alpha Gen II & Bravo



LLAVE GALGADO PIÑONES / PINION GEAR SHIMMING TOOL / CHIAVE PER PIGNONI / CLE POUR PIGNONS

Mide la altura del piñón en las colas MC-I, R-MR, Alpha One y Gene II

Measures pinion height of MC-I; R-MR; Alpha One; and Alpha One, Gen Two drive units.

Misurare l'altezza del pignone nel piede MC-I, R-MR, Alpha One e Gen II.

Mesure la hauteur du pignon sur les queues MC-I, R-MR, Alpha One et Gene II

REF	OEM
REC91-56048001	91-56048001
REC91-60523	91-60523
REC91-60526T	91-60526T



REC91-56048001



REC91-60526T



REC91-60523

CENTRADOR MOTOR / ENGINE ALIGNMENT TOOL / CENTRATORE MOTORE / OUTIL D'ALIGNEMENT

Centra el motor y la cola durante la instalación.

Aligns engine and drive unit during installation.

Centra il motore con il piede durante l'installazione

Centre le moteur et la queue pendant l'installation

REF	OEM
REC91-805475A1	91-805475A1



LLAVE TORNILLO LATERAL TRANSOM / HINGE PIN TOOL / CHIAVE VITE LATERALE TRANSOM / OUTIL DE DÉMONTAGE DE PIVOT POUR EMBASE

Instala y desinstala los tornillos laterales de las colas.

Removes and installs hinge pins from drive units.

Per tutti i piedi Mercruiser.

Installe et désinstalle les vis à queue latérales.

REF	OEM
REC91-78310	91-78310



LLAVES PARA ELEMENTOS DEL CAMBIO / TOOLS FOR ELEMENTS TO DRIVESHAFT / CHIAVI PER GLI ELEMENTI DEL CAMBIO / ADAPTATEUR ARBRE DE TRANSMISSION

Llave montaje y desmontaje casquillo sujección tubo de agua. — Drive shaft adapter. — Chiave per smontare e montare la ghiera del tubo acqua. — Clé pour le montage et le démontage de la douille de fixation de la conduite d'eau.

REF	OEM	
REC91-43579	91-43579	Bravo I, II & III



Llave montaje retenes y casquillos eje cambio. — Driveshaft shiming tool. — Chiave per smontare paraolio e ghiera asse cambio. — Clé de montage des joints et des bagues de l'arbre de transmission.

REF	OEM	
RM91-17275A1	91-17275A1	Bravo I, II & III



Llave tuerca varilla cambio. Para montaje y desmontaje de las tuercas de la varilla cambio en las colas. — Shift shaft bushing tool. Removes and installs the shift shaft bushing in the gear case of drive units. — Chiave per il dado dell'asta del cambio. Per montare e smontare i dadi dell'asta del cambio sulle code. — Clé pour l'écrou de la tige de changement de vitesse. Pour le montage et le démontage des écrous de la tige de changement de vitesse sur les queues.

REF	OEM	
REC91-31107T	91-31107T	MC-I, R-MR, Alpha One.

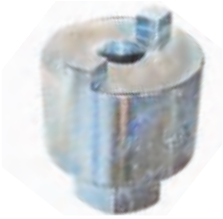

LLave cable cambio. Para montaje y desmontaje de los cables de cambio en las colas. — Shift cable tool. Installs and removes drive shaft bearing retainer on drive units. — Chiave cavo cambio. Per installare e smontare i cavi cambio nei piedi. — Clé pour câble de changement de vitesse. Pour monter et démonter les câbles de changement de vitesse sur les queues.

REF	OEM	
REC91-12037	91-12037	MC-I, R-MR, Alpha One, Gen II.



Llave montaje casquillos eje cambio. — Bushing removal tool. — Chiave per montare ghiera asse cambio. — Clé de montage de la douille de l'arbre de transmission.

REF	OEM	
RM91-17273	91-17273	Bravo I, II & III



Llave extractora eje cambio. — Shift handle tool. F — Chiave estrattore asse cambio. — Clé d'extraction pour l'arbre de transmission.

REF	OEM	
RM91-17302	91-17302	Bravo I, II & III



EXTRACTOR / PULLEY ROD / ESTRATTORE / EXTRACTEUR DE POULIE

Para utilizar con las herramientas REC91-43579 y REC91-36569T para instalar y desmontar el cojinete — Used with REC91-43579 & REC91-36569T tools to install & remove pinion bearing. — Da utilizzare con gli strumenti REC91-43579 e REC91-36569T per installare e smontare il cuscinetto. — A utiliser avec les outils REC91-43579 et REC91-36569T pour installer et retirer le roulement

REF
REC91-31229



Recmar

LLAVE TUERCA CARDAN / BEARING RETAINER WRENCH / CHIAVE CARDANO / CLÉ POUR ÉCROU D'ARBRE

REF	OEM	
REC91-17256	91-17256	MC-I, R-MR, Blackhawk, Alpha y Bravo.



REF	OEM	
REC90490	91-17257T 91-8053741	Bravo II & Bravo III



VACUÓMETRO DOBLE FUNCIÓN / PRESSURE / VACUUM TESTER / VACUOMETRO DOPPIA FUNZIONE / VACUOMETRE DOUBLE FONCTION

Presión y vacío.
Ideal para comprobar las unidades de trasmisión, sensores, vst, etc.

Combination unit that does pressure and vacuum testing in one units.
Recommended to test drives.

Pressione e sottovuoto. Ideale per il controllo dei piedi.

Unité combinée qui effectue des tests de pression et de vide. Recommandé pour tester les embases.

REF
REC55134



PISTOLA DE ACEITE / BOTTLE GREASE PUMP / PISTOLA OLIO / PISTOLET POUR HUILE D'EMBASE

Pistola para acoplar en los envases de botella de 1 L LUB11552 y LUB11564. Se suministra con kit de adaptación con válvula anti-retorno.

Lower unit quart pump. Complete with metal threaded filler fitting.

Pistola da accoppiare a bottiglie da 1 L LUB11552 e LUB11564. Si vende con kit di accoppiamento con valvola anti-ritorno.

Pistolet pour les bidons d'huile de 1 L LUB11552 et LUB11564. Vendu avec kit de couplage avec clapet anti-retour.

REF
REC55005





ADAPTADOR PARA EMBASES RECLUBE / ADAPTOR FOR RECLUBE CONTAINERS / ADATTATORE PER CONTENITORI RECLUBE / ADAPTATEUR POUR CONTENEURS RECLUBE

Para la pistola de aceite REC55005.

For REC55005 bottle grease pump.

Per pistola olio REC55005.

Pour le pistolet REC55005.

REF
REC55006



SISTEMA DE PROPULSIÓN
PROPULSION SYSTEM

SISTEMA DI PROPULSIONE
SYSTEME DE PROPULSION

HÉLICES ALUMINIO E INOXIDABLE DE 3 Y 4 PALAS | **3 & 4 BLADE ALUMINIUM & SS PROPELLERS** | **ELICHE ALLUMINIO E INOX DA 3 E 4 PALE** | **HELICE ALUMINIUM ET INOX 3 ET 4 PALES**

CÓDIGO DE REFERENCIAS | PART NO. CODING SYSTEM | SISTEMA DI CODICE | CODAGE DES REFERENCES

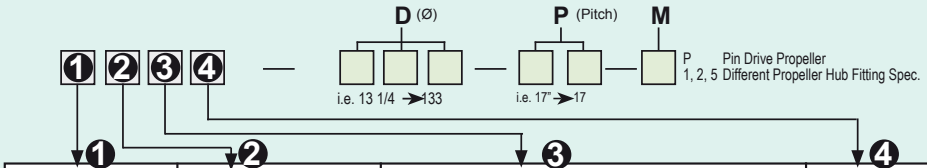

1	2	3	4
1. Mercury, Mariner **2.** Johnson, Evinrude **3.** Yamaha **4.** Suzuki **5.** Tohatsu **6.** **7.** **8.** Volvo Penta **9.** Rubex System	0.5,6,8 and 9.8 HP Group **1.** A Group **2.** B Group **3.** C Group **4.** D Group **5.** E Group **6.** F Group **7.** VP (Std. Hub) **8.** VP (Long Hub)	**1.** AL **2. Saturn** (INOX | Stainless Steel) **3. New Saturn** (INOX | Stainless Steel) **4. Titan** (INOX | Stainless Steel) **5. HR Titan** (INOX | Stainless Steel) **6. Scorpion** (INOX | Stainless Steel) **7. Lexor** (INOX | Stainless Steel)	**1.** 3R Rubber Hub **2.** 3L Rubber Hub **3.** 4R Rubber Hub **4.** 4L Rubber Hub

SOLAS

AMITA 3

SOLAS

Hélice de aluminio con núcleo de goma de gran resistencia.

Aluminum propeller with heavy duty rubber hub.

Eliche di alluminio con mozzi in gomma ad alta resistenza.

Hélice en aluminium avec moyeu en caoutchouc



AMITA 4

SOLAS

Hélices de aluminio con núcleo de goma de gran resistencia. Van muy suaves a poca velocidad y hace el barco muy manejable con la mar picada.

Aluminum propeller with heavy duty rubber hub. Smoother low speed makes the offshore boating activity much easier.

Eliche di alluminio con mozzo in gomma ad alta resistenza. Molto morbido a bassa velocità e rende la barca molto maneggevole con mare cattivo.

Hélice en aluminium avec moyeu en caoutchouc. Permet d'aller doucement à basse vitesse et rende le bateau très maniable lorsque la mer est agitée



LEXOR

SOLAS

Hélices de acero inoxidable. Gran diámetro del área de las palas para barcos pesados. Gran rendimiento en alta velocidad sin sacrificar las velocidades medias. Excelente ahorro de combustible.

Stainless steel propeller. Large diameter and blade area for big boat loads. Great high speed performance sithout sacrificing mid-range speeds. Excellent fuel economy.

Eliche di acciaio inox. Grande diametro delle pale per imbarcazioni pesanti. Grandi prestazioni ad alta velocità senza sacrificare velocità medie. Eccellente risparmio di carburante.

Hélice inox, grand diamètre pour bateaux lourds. Excellentes performances à grande vitesse sans sacrifier les vitesses moyennes. Excellente économie de carburant.



NEW SATURN

SOLAS

Hélices de acero inoxidable. Ofrece buena aceleración y rendimiento. Tamaño más pequeño que ofrece un diámetro extragrande.

Stainless steel propeller. Offers good acceleration & all-round performance. Smaller pitch sizes offered in extra large diameter with increased blade area.

Eliche di acciaio inox. Buona accelerazione. Piccole dimensione che offre un più grande diametro.

Hélice inox, offrant de bonnes accélérations et performances. Taille de pas reduite pour les modèles de grands diamètres avec une surface de pale plus importante.



HR TITAN 3 PROP

SOLAS

Hélice de acero inoxidable. Alto rendimiento para cascos de alta velocidad.
La inclinación de la hoja proporciona un excelente elevación de proa y aceleración.
El diseño de copa grande aumenta la mordida y reduce el deslizamiento.

Stainless steel propeller. Performance prop for high speed planning hulls. High rake blade design provides excellent bow lift and acceleration. Heavy cup design increases bite and reduces slip.

Eliche in acciaio inox. Alte prestazioni per scafi ad alta velocità. Il passo della pala fornisce un'eccellente spinta e accelerazione. Il disegno aumenta le prestazioni.

Hélice en acier inoxydable. Hélice de performance pour les coques de planification à grande vitesse. La conception de la lame à haut râteau offre une excellente portance et accélération de l'arc. La conception lourde de la tasse augmente la morsure et réduit le glissement.



GUÍA DE HÉLICES CON NÚCLEO INTEGRADO — PROPELLERS APPLICATION WITH RUBBER HUB — GUIDA ELICHE CON MOZZO — GUIDE DES HELICES ET MOYEUX

	R.O. OEM	B	D	P	R	TIPO	AL		INOX STAINLESS STEEL		
							AMITA 3	AMITA 4	NEW SATURN	HR TITAN 3	LEXOR
ALPHA ONE BRAVO ONE	48-78114A45	3	16	13	R	BLACK MAX	SOL1511-160-13		SOL1531-156-13		
	48-78116A4	3	15 1/2	15	R	BLACK MAX		SOL1513-148-15	SOL1531-145-15		
	48-832828A45	3	[15]	17	R	BLACK MAX	SOL1511-150-15	SOL1513-145-17	SOL1531-143-17		
	48-832830A45	3	14 1/2	19	R	BLACK MAX	SOL1511-148-17	SOL1513-143-19	SOL1531-140-19		
	48-832832A45	3	14 1/2	21	R	BLACK MAX	SOL1511-145-19	SOL1513-140-21	SOL1531-140-21		
	48-832834A45	3	14	23	R	BLACK MAX	SOL1511-143-21	SOL1513-140-23	SOL1531-140-23		
	48-78126A45	3	13 3/8	25	R	BLACK MAX	SOL1511-142-23		SOL1531-140-25		
	48-831850A45	4	15	16	R	ALPHA 4		SOL1513-145-17			
	48-834851A45	4	15	16	L	ALPHA 4		SOL1514-145-17			
	48-834852A45	4	14 1/2	18	R	ALPHA 4		SOL1513-143-19			
	48-834853A45	4	14 1/2	18	L	ALPHA 4		SOL1514-143-19			
	48-834854A45	4	14	20	R	ALPHA 4		SOL1513-140-21			
	48-834855A45	4	14	20	L	ALPHA 4		SOL1514-140-21			
	48-16312A46	3	14 1/2	15	R	VENGEANCE			SOL1531-145-15		
	48-16314A46	3	14 1/2	17	R	VENGEANCE			SOL1531-143-17	SOL1551-148-16	
	48-16315A46	3	14 1/2	17	L	VENGEANCE			SOL1532-143-17	SOL1552-148-16	
	48-16316A46	3	14	19	R	VENGEANCE			SOL1531-140-19	SOL1551-148-18	
	48-16317A46	3	14	19	L	VENGEANCE			SOL1532-140-19	SOL1552-148-18	
	48-16318A46	3	13 3/4	21	R	VENGEANCE			SOL1531-140-21	SOL1551-148-20	
	48-16319A46	3	13 3/4	21	L	VENGEANCE			SOL1532-140-21	SOL1552-148-20	
	48-16320A46	3	13 1/2	23	R	VENGEANCE			SOL1531-140-23	SOL1551-143-22	
	48-16321A46	3	13 1/2	23	L	VENGEANCE			SOL1532-140-23	SOL1552-143-22	
	48-16322A46	3	13 3/8	25	R	VENGEANCE			SOL1531-140-25	SOL1551-140-24	
	48-16544A46	3	14	19	R	LASER II				SOL1551-148-19	
	48-16543A46	3	14	19	L	LASER II				SOL1552-148-19	
	48-16546A46	3	13 7/8	21	R	LASER II				SOL1551-145-21	
	48-16545A46	3	13 7/8	21	L	LASER II				SOL1552-145-21	
	48-16548A46	3	13 3/4	23	R	LASER II				SOL1551-143-22	
	48-16547A46	3	13 3/4	23	L	LASER II				SOL1552-143-22	
	48-16550A46	3	13 3/4	25	R	LASER II				SOL1551-140-24	
	48-16549A46	3	13 3/4	25	L	LASER II				SOL1552-140-24	
	48-826072A46	3	16	13	R	MIRAGE PLUS	SOL1511-160-13				
	48-19838A46	3	15 3/4	15	R	MIRAGE PLUS	SOL1511-158-15				
	48-19841A46	3	15 3/4	15	L	MIRAGE PLUS	SOL1512-158-15				
	48-18278A46	3	15 1/2	17	R	MIRAGE PLUS	SOL1511-155-17				SOL1571-155-17
	48-90159A46	3	15 1/2	17	L	MIRAGE PLUS	SOL1512-155-17				SOL1572-155-17
	48-13700A46	3	15 1/4	19	R	MIRAGE PLUS	SOL1511-153-19				SOL1571-153-19
	48-13701A46	3	15 1/4	19	L	MIRAGE PLUS	SOL1512-153-19				SOL1572-153-19
	48-13702A46	3	13 3/4	21	R	MIRAGE PLUS	SOL1511-153-21				SOL1571-150-21
	48-13703A46	3	14 3/4	21	L	MIRAGE PLUS	SOL1512-153-21				SOL1572-150-21
	48-13704A46	3	14 5/8	23	R	MIRAGE PLUS	SOL1511-153-23				SOL1571-148-23
	48-13705A46	3	14 5/8	23	L	MIRAGE PLUS					SOL1572-148-23
	48-13706A46	3	14 1/2	25	R	MIRAGE PLUS					SOL1571-145-25
	48-13707A46	3	14 1/2	25	L	MIRAGE PLUS					SOL1572-145-25
BRAVO II 4.3L, LH, EFI 5.0L EFI 350 MAG EMPI 454 MAG MPI 502 MAG MPI D2.8L, D-TRONIC D3.6L D4.2L D-TRONIC D7.3L D-TRONIC 7.4L MPI	48-18610A40	3	19 1/4	15	R	ALUM	SOL1611-193-15			SOL1641-193-15	
	48-18611A40	3	19 1/4	15	L	ALUM	SOL1612-193-15			SOL1642-193-15	
	48-18612A40	3	18 3/4	17	R	ALUM	SOL1611-188-17			SOL1641-188-17	
	48-18613A40	3	18 3/4	17	L	ALUM	SOL1612-188-17			SOL1642-188-17	
	48-18614A40	3	18 1/4	19	R	ALUM	SOL1611-183-19			SOL1641-183-19	
	48-18615A40	3	18 1/4	19	L	ALUM	SOL1612-183-19			SOL1642-183-19	
	48-18616A40	3	17 3/4	21	R	ALUM	SOL1611-178-21			SOL1641-178-21	
	48-18617A40	3	17 3/4	21	L	ALUM	SOL1612-178-21			SOL1642-178-21	
	48-18618A40	3	17 1/2	23	R	ALUM				SOL1641-175-23	
	48-18619A40	3	17 1/2	23	L	ALUM				SOL1642-175-23	
	48-18620A40	3	17 1/4	25	R	ALUM				SOL1641-175-23	
	48-18621A40	3	17 1/4	25	L	ALUM				SOL1642-173-25	
	48-18610A6	3	19 1/4	15	R	SS	SOL1611-193-15			SOL1641-193-15	
	48-18611A6	3	19 1/4	15	L	SS	SOL1612-193-15			SOL1642-193-15	
	48-18612A6	3	18 3/4	17	R	SS	SOL1611-188-17			SOL1641-188-17	
	48-18613A6	3	18 3/4	17	L	SS	SOL1612-188-17			SOL1642-188-17	
	48-18614A6	3	18 1/4	19	R	SS	SOL1611-183-19			SOL1641-183-19	
	48-18615A6	3	18 1/4	19	L	SS	SOL1612-183-19			SOL1642-183-19	
	48-18616A6	3	17 3/4	21	R	SS	SOL1611-178-21			SOL1641-178-21	
	48-18617A6	3	17 3/4	21	L	SS	SOL1612-178-21			SOL1642-178-21	
	48-18618A6	3	17 1/2	23	R	SS				SOL1641-175-23	
	48-18619A6	3	17 1/2	23	L	SS				SOL1642-175-23	
	48-18620A6	3	17 1/4	25	R	SS				SOL1641-173-25	
	48-18621A6	3	17 1/4	25	L	SS				SOL1642-173-25	

BRAVO III

HELICES DE ACERO INOXIDABLE
Hélices delanteras de 4 palas y hélices traseras de 3 palas. 19 estrías y escape a través de la hélice.

STAINLESS STEEL PROPELLERS
Front propellers with 4 blades & rear propellers with 3 blades. 19 Tooth Spline and Thru hub exhaust.

ELICHE IN ACCIAIO INOX
Eliche anteriori da 4 pale e eliche posteriori da 3 pale. 19 denti e scarico all'elica.

HÉLICES EN ACIER INOXYDABLE
Hélices avant à 4 pales et hélices arrière à 3 pales. 19 cannelures et l'échappement par l'hélice.

DELANTERA FRONT ANTERIORE DAVANT	R IZQUIERDA LEFT SINISTRA GAUCHE	TRASERA REAR POSTERIORE ARRIÈRE	R DERECHA RIGHT DESTRA DROIT	B	D	P
SOL1654-160-20				4	16"	20
		SOL1651-144-20		3	14 3/8"	20
SOL1654-160-21				4	16"	21
		SOL1651-144-21		3	14 3/8"	21
SOL1654-158-22				4	15 3/4"	22
		SOL1651-143-22		3	14 1/4"	22
SOL1654-158-23				4	15 3/4"	23
		SOL1651-143-23		3	14 1/4"	23
SOL1654-155-24				4	15 1/2"	24
		SOL1651-140-24		3	14"	24
SOL1654-155-25				4	15 1/2"	25
		SOL1651-140-25		3	14"	25
SOL1654-155-26				4	15 1/2"	26
		SOL1651-140-26		3	14"	26
SOL1654-155-27				4	15"	27
		SOL1651-140-27		3	13 3/4"	27
SOL1654-150-28				4	15"	28
		SOL1651-138-28		3	13 3/4"	28

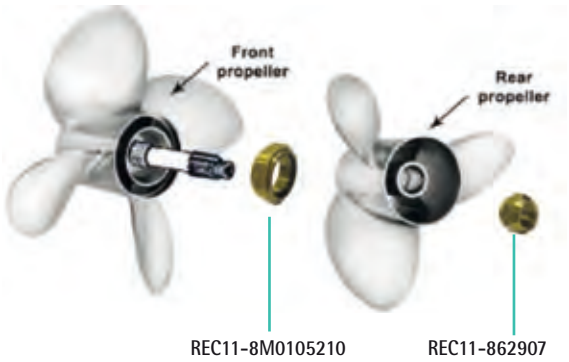

REC11-8M0105210 REC11-862907

HÉLICES 3 PALAS ALPHA ONE Y BRAVO ONE

Altas prestaciones. Núcleo de goma intercambiable con sistemas flo-torq & Vorterx System. Disponible en acero inox y aluminio

3 BLADE PROPELLERS ALPHA ONE & BRAVO ONE

High performance / Ruber Hub interchangeable with flo-torq & Vorterx Sistem. Avaliable in stainles Steel & Aluminium Propeller

ELICHE DA 3 PALE ALPHA ONE / BRAVO ONE

Alte prestazioni. Mozzo in gomma intercambiabile con sistema flo-torq & Vortex System. Disponibile in acciao inos e alluminio.

HÉLICES À 3 PALES ALPHA ONE, BRAVO ONE

Haute performance. Noyau en caoutchouc interchangeable avec le système flo-torq et Vorterx. Disponible en acier inoxydable et en aluminium.

REF	OEM	
SOLRBX-102		ALPHA ONE BRAVO ONE



RUBEX



-400 HP

AL	A	B	D	P	R
SOL9511-153-13		3	15,3	13	R
SOL9511-150-15		3	15	15	R
SOL9512-150-15		3	15	15	L
SOL9511-148-17		3	14,8	17	R
SOL9512-148-17		3	14,8	17	L
SOL9511-145-19		3	14,5	19	R
SOL9512-145-19	15	3	14,5	19	L
SOL9511-143-21		3	14,3	21	R
SOL9512-143-21		3	14,3	21	L
SOL9513-148-15		4	14,75	15	R
SOL9513-145-17		4	14,5	17	R
SOL9513-143-19		4	14,25	19	R
SOL9513-140-21		4	14	21	R



-400 HP

	INOX | SS	A	B	D	P	R
RUBEX L3	SOL9571-158-15	15	3	15 3/4	15	R
	SOL9572-158-15		3	15 3/4	15	L
	SOL9571-155-17		3	15 1/2	17	R
	SOL9572-155-17		3	15 1/2	17	L
	SOL9571-153-19		3	15 1/4	19	R
	SOL9572-153-19		3	15 1/4	19	L
	SOL9571-150-21		3	15	21	R
	SOL9572-150-21		3	15	21	L
	SOL9571-148-23		3	14 3/4	23	R
	SOL9572-148-23		3	14 3/4	23	L
	SOL9571-145-25		3	14 1/2	25	R
	SOL9572-145-25		3	14 1/2	25	L
RUBEX NS3	SOL9531-145-15	15	3	14 1/2	15	R
	SOL9532-145-15		3	14 1/2	15	L
	SOL9531-143-17		3	14 1/4	17	R
	SOL9532-143-17		3	14 1/4	17	L
	SOL9531-140-19		3	14	19	R
	SOL9532-140-19		3	14	19	L
	SOL9531-140-21		3	14	21	R
	SOL9532-140-21		3	14	21	L
	SOL9531-140-23		3	14	23	R
	SOL9532-140-23		3	14	23	L

TABLA DE APLICACIÓN DE HÉLICES SOLAS — PROPELLERS SOLAS APPLICATION GUIDE — GUIDA APPLICAZIONE ELICHE SOLAS — TABLEAU D'APPLICATION DE L'HÉLICE SOLAS

		AMITA3	AMITA4	BRAVO TWO	SATURN	NEW SATURN	TITAN	HR TITAN3	HR TITAN4	SCORPION	LEXOR	SOLAS SKI	SOLAS PLASTIC	HIGH THRUST
FUERABORDA OUTBOARD FUORIBORDO HORSBORD	INFLATABLE	✔	✔		✔	✔	✔						✔	
	ALUMINIUM	✔			✔	✔	✔							
	SKI BOAT	✔	✔				✔	✔						
	BASSBOAT	✔							✔	✔				
	FLATS BOAT	✔							✔					
	BAY BOAT										✔			
	WALLEYE BOAT	✔							✔					
	OFFSHORE SINGLE	✔	✔				✔	✔	✔		✔			
	OFFSHORE DUAL	✔	✔				✔	✔	✔		✔			
	SPORT BOAT SINGLE										✔			
	SPORT BOAT DUAL								✔		✔			
	HEAVY WORK BOAT	✔	✔			✔	✔		✔					
	COMMERCIAL	✔			✔									
	SAIL DRIVE													✔
	PLEASURE RUNABAOUT	✔	✔		✔	✔	✔		✔					
	DECK BOAT		✔						✔					
	PONTOON	✔	✔		✔	✔	✔							
DENTRO-FUERABORDA STERNDRIVE ENTROFUORIBORDO HORSBORD	SKI BOAT													
	SPORT BOAT SINGLE								✔		✔			
	SPORT BOAT DUAL								✔		✔			
	FAMILY CRUISER	✔	✔				✔	✔	✔		✔			
	CRUISER BOAT			✔										
	DECK BOAT								✔					
	PONTOON								✔		✔			
	HOUSEBOAT	✔	✔		✔	✔	✔		✔		✔			
	INBOARD SKI BOAT											✔		
CARACTERÍSTICAS FEATURES CARATTERISTICHE CARACTERISTIQUES		AL	AL	AL INOX SS	INOX SS	INOX SS	INOX SS	INOX SS	INOX SS	INOX SS	INOX SS	INOX SS	PLAST.	AL
	B	3	4	3	3	3	3	3	4	3	3	3.4	3	4
	R	L	L	L	L	L	L	L	L	L	L	R	R	R
	NÚCLEO DE GOMA / RUBBER HUB / MOZZO GOMMA / NOYAU CAOUTCHOUC	✔	✔	✔	✔	✔	✔	✔	✔	✔	✔			✔

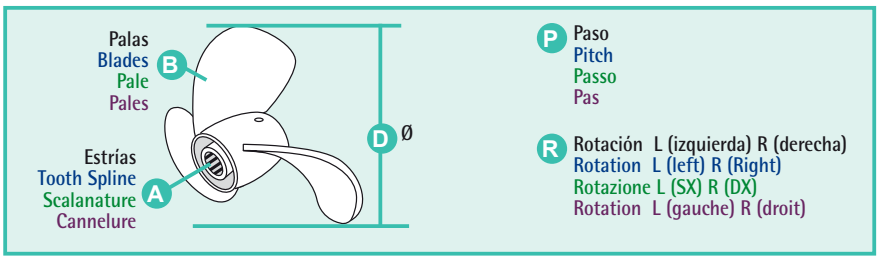

REF --> OEM

REF	OEM	
A		
AM603905	88-832969T05	159
AM603910	88-832969T10	159
AM603915	88-832969T15	159
AM603920	88-832969T20	159
AM603930	88-832969T30	159
AMITA3		316
AMITA4		316
B		
BA1-47638	47638A1	218-250
BAMC-1-58759	58759A1	243
BAMC-1-58759	58759A10	243
BAMC-1-58759	58759A13	243
BAMC-1-58759	58759A14	225-243
BAMC-1-58759		248-250-252
BAMC-1-63122	63122A10	218-242
BAMC-1-63122	63122A13	212-242
BAMC-1-63122	63122A14	218-242
BAMC-1-63122		250-252
BAMC-1-95862	95862A5	221-242-250-253
BAMC-20-14478	14478T	249
BAMC-20-14478	14478T01	227-230-237-239-249
BAMC-20-55538	39920	245
BAMC-20-55538	55538A2	218-245
BAMC-20-55538		251
BAMC-20-864908A1	864908A1	229-233-249
BAMC1-47735	47735	244
BAMC1-47735	47735A1	244
BAMC1-47735	47735A17	240-244
BAMC1-47735		248-250-253
BAMC1-47736	47736	244
BAMC1-47736	47736A17	240-244
BAMC1-47736		248-250-253
BAMC1-47737	47737A1	240-244
BAMC1-47737	47737A10	244
BAMC1-47737		248-250
BAMC1-47738	47738A1	240-244
BAMC1-47738	47738A10	244
BAMC1-47738		248-250
BAMC20-61811A4	61811A3	248
BAMC20-61811A4	61811A4	248
BAMC20-61811A4		240
BAMC20-61851A3	61851A3	225-235-241-248
BAMC20-72963	48101A1	246
BAMC20-72963	72963A1	246
BAMC20-72963	72963A9	240-246
BAMC20-72963	76788A1	246
BAMC20-72963		251
BAMC20-76668	47877A4	245
BAMC20-76668	72964A1	245
BAMC20-76668	76668A1	245
BAMC20-76668	76668A3	240-245
BAMC20-76668		251
BAMC29-47587	47587	177
BAMC29-47587	47587A2	177
BAMC29-47587	861493A07	177
BAMC29-47587	861493A3	177
BAMC29-47587		180
BAMC29-59498	59498	180
BAMC29-59498	59498A1	180
BAMC29-60372	60372A1	180
BAMC29-60372	60372A2	180
BAMC29-60372	861493A07	180
BAMC29-62898	62898	180
BAMC29-62898	62898A1	180
BAMC29-63588	889333	178
BAMC29-63588	63588A1	178
BAMC29-63588		180
BAMC29-78985	78985A1	178-180
BAMC47-27-39923	39916	250
BAMC47-27-39923	27-39923	218-250
BRA125-1/2x1/2		123
BRA125-1/2x3/4		123
BRA125-1/2x3/8		123
BRA125-1/4x1/2		123
BRA125-1x3/4		123
BRA125-3/16x1/4		123
BRA125-3/4x3/4		123
BRA125-3/8x1/2		123
BRA125-3/8x3/8		123
BRA125-5/16x3/8		123
BRA125-5/8x3/4		123
BRA125-5/8x3/8		123
BS2138	88-8M2011907	158
BS2142	88-11178A01	158
BS2143	88-93582	158
BS5138		159
BS5139		159
BS5140	88-79023A94	159
BS5141		159
BS5142		159
BS5143		159
BS5175	88-8M0129533	159
BS5177	88-8M0129534	159
BS5181	88-8M0129535	159
BS5182	88-8M0129560	159
BS5183	88-8M0130941	159
BS5185	88-8M0129528	159
BS5187	88-8M0129530	159
BS5189	88-8M0129531	159
BS5191		159
BS5291		159
BS5292	862646	159
BS5293		159
BS5294	862647	159
BS5295		159
BS5296	88-212619	159
BS5297		159
BS5298		159
BS5299		159
C		
CARP74021		127
CEF500106GT	47-801332602	188
CEF500109	47-59362Q01	188
CEF500114T	47-879194186	188
CEF500120T	47-879312025	188
CEF500155	47-896332063	188
CEF500159G	47-862232A2	188
CEF500159G	47-8M0104229	188
CEF500161	47-809866T	188
CEF500161	47-831311350	188
CEF500167	3349198	188
CEF500167	3916720	188
CEF500167	47-853126	188
CEF500167	8M0056956	188
CEF500177GT	47-816814T	188
CEF500183G	3972366	188
CEF500301	47-43026Q02	188
CEF500313G	47-89984T4	188
CEF500507K	32-44348	253
CEF500507K	32-44348001	253
CEF500507K	32-44348T	253
CEF500508K	32-14358	253
CEF500508K	32-14358001	253
CEF500508K	32-14358T	253
CEF500509K	86840A05	299
CEF500509K	86840A3	299
CEF500509K	8M0062406	299
CEF500511K	32-90949T	253
CEF500512K	32734	300
CEF500512K	18654A1	300
CEF500512K	32734A3	300
CEF500513K	74639Q02	299
CEF500515K	816431A1	299
CEF500516K	60932A1	299
CEF500516K	60932A4	299
CEF500520K	78458	300
CEF500520K	78458A1	300
CEF500522K	36223	299
CEF500522K	36223A1	299
CEF500522K	36223A2	299
CEF500523	70981A3	253
CEF500524	53114	253
CEF500524	53114A1	253
CEF500524		219
CEF500532K	32-807458T	253
CHAPROSU		163
CHARJ12YC		163
CHARN5C		163
CHARS12PYP		163
CHARS12YC		163
CHARV15YC4		163
CHARV9IMC		163
CHAV63C		163
CM31640	31640A4	288
CM31640	31640Q4	263-267
CM31640A	31640A4	288
CM31640A	31640Q4	263-267
CM34127	34127T2	288
CM34127A	34127T2	288
CM34762	34762A1	288
CM34762A	34762A1	288
CM43994	43994A2	288
CM43994	821631A1	288
CM43994		108-109
CM46399	46399A1	288
CM46399	822777Q1	288
CM46399		109
CM46399A	46399A1	288
CM46399A	822777Q1	288
CM55989	55989A9	288
CM55989	55989Q9	288-291
CM55989A	55989A9	288
CM55989A	55989Q9	288
CM55989A		291
CM762144	76214-4	288
CM762144	76214A2	281
CM762144	76214Q5	283
CM762144		109
CM762144A	76214-4	288
CM762144A	76214A2	281
CM762144A	76214Q5	283
CM762145	76214A2	288
CM762145	76214Q5	275-270-288
CM762145A	76214A2	288
CM762145A	76214Q5	275-288
CM762145A	76514Q5	279
CM76214Q5	76214Q5	109-288
CM806105	806105Q1	267-275
CM806105	806188A1	288
CM806105A	806105Q1	267-275
CM806105A	806188A1	288
CM806188	806188A1	109-279-281-283-288
CM806188A	806188A1	108-279-281-283-288
CM806189	806189Q1	288-307
CM806189A	806189Q1	288-307
CM806190	806190A1	308
CM806190	806190Q1	288
CM806190		109
CM806190A	806190A1	308
CM806190A	806190Q1	288
CM821629	821629Q1	109-269-271-288
CM821629A	821629Q1	269-271-288
CM821630	821630A1/Q1	288
CM821630	821630Q1	277
CM821630		109
CM821630A	821630A1/Q1	288
CM821630A	821630Q1	277
CM821631	43994A2	288
CM821631	821631A1	288
CM821631	821631Q	296
CM821631	821631Q1	291
CM821631A	43994A2	288
CM821631A	821631A1	288
CM821631A	821631Q	296
CM821631A	821631Q1	291
CM865182CA		289
CM865182CZ		109-289
CMALPHAGEN1KITA	888756Q02	256-263-267-289
CMALPHAGEN1KITM	888756Q02	263-267-289
CMALPHAKITA	888756Q01	289
CMALPHAKITA	888756Q03	289
CMALPHAKITA		257-269-271-275
CMALPHAKITM	888756Q01	289
CMALPHAKITM	888756Q03	289
CMALPHAKITM		262-271-275
CMBRAVO1KITA	888758Q01	279-289
CMBRAVO1KITM	888758Q01	279-289
CMBRAVO2Y3KITA	888761Q01	281-289
CMBRAVO2Y3KITM	888761Q01	281-289
CMBRAVO3KITA	888761Q02	283-289
CMBRAVO3KITM	888761Q02	283-289
CMC		289
CMCC		289
CMPNAA		289
CMPNAZ		289
CMPNBA		289
CMPNBZ		289
CMPNCA		289
CMPNCF16A		289
CMPNCZF16Z		289
CMPNDA		289
CMPNDAF14UNS		283-289
CMPNDAF14UNSA		283-289
CMPNDZ		289
CMPNEZF14A		289
CMX-1	85538	288
CMX-1	823341	288
CMX-1A	85538	288
CMX-1A	823341	288
F		
FEDV-1984	44182A1	217
FEDV-3929	75416	217
FEL17019		206
FEL17049		212-214
FEL17060		207-211
FEL17069		205
FEL17119		206
FEL17124		210
FEL17145		213-214
FEL17160		208
FEL17165		211
FEL17205		213
FEL17219		206
FEL17260		207-211
FEL17319	27-46401	225-252
FEL17360		208-211
FEL17420	27-33395	210-233-235-237-253
FEL17460	27-73866	253
FEL17725		209-210-216
FEL17740	26-75980	216-217
FEL17925		206
FEL17926		206
FEL17945		208-211
FEL17975		206
FEL17983		209-210
FEL17995		208
FEL17996		211
FELBS40013	26-814622	216-217

REF	OEM	
G		
GEGC15		136
GS30430		122
GS30431		122
GS30432		122
GS30433		122
GS31001		112
GS31002		112
GS31055		112
GS31056		112
GS31065		112
GS31066	22-89771Q2	112
GS31067		112
GS31157		112
GS38105	814263A1	303
GS38122	35852	303
GS38310	54-815504456	229-233
GS38320	815504272	231
GS38320	54-815504256	221-222-227-237-239
GS38320	54-815504272	233
GS38320	54-815504372	221
GS38320	54-815504456	229
GS38320		223
GS38322	54-815504372	221-227-230-237-239
GS90002		109
GS90012		109
GS90019		109
GS90090		109
GS90092		109
H		
HGE4870	73813A1	218-219-221-225-235-240-241-250
HGE4929	864929A3	229-233
HGE6351	76351A04	241
HOT20560-MK		241
HOT20905-MK		224
HOT20937	816219A5	242
HOT20937	98562A6	224-242-246-251
HOT20937-MK		224-242
HOT20950	77234A2	244
HOT20950	77234A7	235-244
HOT20950		250-253
HOT20952	99746A17	227-230-243
HOT20952	99746A3	243
HOT20952	99746A8	243
HOT20952-MK		226-227
HOT20956	806235A04	242
HOT20956	806867A8	242
HOT20956	860235A04	221
HOT20956	99798A18	242
HOT20956		248-250-253
HOT20956-MK		220
HOT20957-MK		239
HOT20958	65604A12	241-244
HOT20958	65604A4	244
HOT20958		250-253
HOT20962	65603A12	241-244
HOT20962	65603A3	244
HOT20962		250-253
HOT20970	98504A3	227-237-239-246
HOT20971	60426A1	246
HOT20971	76351A04	219-225-235-241-246
HOT20971	76351A2	246
HOT20971		251
HOT20975-MK		220-222-224
HOT20976-MK		226-227-236-237-238-239
HOT20978	76771A2	219-235-241
HOT20985	93322A12	249
HOT20985	93322A12AV	227-237-239
HOT20985		227-239
HOT26371-MK		219-225-235-241
HOT27214-MK		235-236-237
HOT28503-MK		226-227-236-237-238-239
HR TITAN		316
J		
JAB11979-0001	47-896332063	107-188
JAB17018-0001	47-816814T	107-188
JAB17937-0001-P	47-879194186	107-188
JOH09-1028B	47-801332602	188
L		
LENS3213	35-809097	111
LENS3227	35-886638	111
LENS3240		111
LEXOR		316
M		
MAG15-602	84-813720A8	167
MAG15-602	84-816761Q8	167
MAG15-803	84-816761A15	167
MAG15-803	84-816761A2	167
MAG15-803	84-816781A15	167
MAG15-809		167
MAR076	12076A2	221-222-245-251
MAR078	807078A6	244
MAR078	807078T09	244
MAR078	807078T10	239-244
MAR078	89011A8	244
MAR078		249-253
MAR246	860246A10	244
MAR246	860246A15	237-244
MAR246	860246A3	244
MAR246	860246A9	244
MAR246	87114A19	244
MAR246		249-253
MAR309	864309T01	245
MAR309	864309T02	229-233-245-251
MAR988	44354A3	245
MAR988	807914A1	245
MAR988	807988A03	227-230-237-239-245
MAR988	807988A2	245
MAR3320PAR	807476A6	248
MAR3320PAR	93320A13	227-237-239-248
MAR3320PAR	93320A5	248
MAR3320PAR		227-237-239
MAR591	864591T02	229-233-245-251
MAR612	864612T01	229-243-248-249-252
MAR735	864308T01	243
MAR735	865049T01	243
MAR735	865735A02	233-243
MAR746	99746A17	227-230-243
MAR746	99746A3	243
MAR746	99746A8	243
MAR746		249-252
MAR929	864929A3	229-248
MAR988	44354A3	245
MAR988	807914A1	245
MAR988	807988A03	227-230-237-239-245
MAR988	807988A2	245-251
MP0180-001	10-812509184	152
MP425024	824324	254
MP425024	824324T	254
MP425036	824330	254
MP425036	824330T	254
MP425113	59974	254
MP425113	811575	254
MP425113	811575T	254
MP425149	72608	254
MP425149	72608T	254
MP426422		133
MP426574		133
MP426766		134
MP514516	807729T	193
MP514516	8M0153706	193
MP514693	33863	193
MP514693	33863T	193
MP514720		193
N		
NEW SATURN		316
NGKBPR5EFS-13		105-164-166
NGKBPR6EFS		104-105-106-164-165-166
NGKBPR6ES		107-166
NGKBR6FS		164
NGKBR6ES		164
NGKBR6FS		104-105-106-164-165-166
NGKBR6FVX		106
NGKBR9ES		164
NGKITR4A15		105-10-164-165-166
NGKIZFR7M		107
NGKPZTR5A-15		166
NGKTR55IX		107
NGKTR5IX		165
NGKTR6IX		104-105-106
P		
PAF15-07010004	479452	229
PAGB/T93-10	41471	223-231
PAGB/T97.1-8	12-36001	192-261-265
PAGB/T848-6	12-29245	261-265
PRE30107		301
PRE30212		301
PRE3300C05	8M0082577	3 01
PRE3300C06	8M0082578	301
PRE3300C07	8M0082579	301
PRE3300C08	8M0082580	301
PRE3300C09	8M0082581	301
PRE3300C10	8M0082582	301
PRE3300C11	8M0082583	301
PRE3300C12	8M0082584	301
PRE3300C13	8M0082585	301
PRE3300C14	8M0082586	301
PRE3300C15	8M0082587	301
PRE3300C16	8M0082588	301
PRE3300C17	8M0082589	301
PRE3300C18	8M0082590	301
PRE3300C19	8M0082591	301
PRE3300C20	8M0082592	301
PRE3300C21	8M0082593	301
PRE3300C22	8M0082594	301
PRE3300C23	8M0082595	301
PRE3300C24	8M0082596	301
PRE3300C25	8M0082597	301
PRE3300C26	8M0082598	301
PRE3300C27	8M0082599	301
PRE3300C28	8M0082600	301
PRE3300C29	8M0082601	301
PRE3300C30	8M0082602	301
PRE3300C31	8M0082603	301
PRE3300C32		301
PRE3300C33		301
PRE3300C34	8M0082604	301
PRE3300C35		301
PRE3300C36	8M0082605	301
PRE3300C38	8M0082606	301
PRE3300C40		301
PRE3300C42		301
PRE3300C44		301
PRE3300C46		301
PRE3300C48		301
PRE3300C50		301
PRE53006	8M0082529	301
PRE53007	8M0082530	301
PRE53008	8M0082531	301
PRE53009	8M0082532	301
PRE53010	8M0082533	301
PRE53011	8M0082534	301
PRE53012	8M0082535	301
PRE53013	8M0082536	301
PRE53014	8M0082537	301
PRE53015	8M0082538	301
PRE53016	8M0082539	301
PRE53017	8M0082540	301
PRE53018	8M0082541	301
PRE53019	8M0082542	301
PRE53020	8M0082543	301
PRE53021	8M0082544	301
PRE53022	8M0082545	301
PRE53023	8M0082546	301
PRE53024	8M0082547	301
PREKM63706	8M0082479	301
PREKM63707	8M0082480	301
PREKM63708	8M0082481	301
PREKM63709	8M0082482	301
PREKM63710	8M0082483	301
PREKM63711	8M0082484	301
PREKM63712	8M0082485	301
PREKM63713	8M0082486	301
PREKM63714	8M0082487	301
PREKM63715	8M0082488	301
PREKM63716	8M0082489	301
PREKM63717	8M0082490	301
PREKM63718	8M0082491	301
PREKM63719	8M0082492	301
PREKM63720	8M0082493	301
PREKM63721	8M0082494	301
PREKM63722	8M0082495	301
PREKM63723	8M0082496	301
PREKM63724	8M0082497	301
R		
RAC1/2F-1/2M		123
RAC1/2X16		123
RAC1/2X18		123
RAC1/2X20		123
RAC1000MA30		117
RAC1000VMA		117
RAC120AS		118
RAC120R-RAC-01		111
RAC2010PM-OR		117
RAC2010SM-OR		117
RAC2010TM-OR		117
RAC2020PM-OR		117
RAC2020SM-OR		117
RAC2020TM-OR		117
RAC2040PM-OR		117
RAC2040SM-OR		117
RAC2040TM-OR		117
RAC230R2		118
RAC245R2		118
RAC3/8F-3/8M		123
RAC3/8X10		123
RAC3/8X12		123
RAC3/8X14		123
RAC31871	35-884380T	112
RAC31871	35-8M0020349	112
RAC31871	35-8M0060041	112
RAC31871		105
RAC320R-INOX-01		111
RAC320R-RAC-01		111
RAC320R-RAC-02		111
RAC460R2		118

REF	OEM	
RAC490R2		118
RAC500MA30		117
RAC75/1000MA30		117
RAC75/500MAX		117
RAC900MA30		117
RAC900VMA		117
RACPFF5510		110
RACR11T		118
RACR12		119
RACR120P		118
RACR120SM		118
RACR120TM		118
RACR12P		118
RACR12S		118
RACR12T		118
RACR20P		118
RACR20S		118
RACR20T		118
RACR24P		118
RACR24S		118
RACR24T		118
RACR25P		118
RACR25S		118
RACR25T		118
RACR26P		118
RACR26S		118
RACR26T		118
RACR60P		118
RACR60S		118
RACR60T		118
RACR90P		118
RACR90S		118
RACR90T		118
RACRK19492UL		123
RACRK20726		123
RACRK22628		123
RACS3213	35-809097	111
RACS3214	35-809099	111
RACS3220UL		111
RACS3227	35-886638	111
RACS3228UL		111
RACS3240		111
REC004		163
REC016940	879194241	121
REC016940	35-815419	121
REC016940		106-107
REC02644		292-303
REC0307239	25-33504	215-295
REC0987883		151
REC10-20518	10-20518	292-303
REC10-28668	10-28636	291
REC10-28668	10-28668	259-271
REC10-28668	10-28688	269
REC10-30206	10-30206	263-267
REC10-30206		256
REC10-31700	10-31700	292-302
REC10-32470	10-32470	263-267
REC10-34354	10-34354	221
REC10-35386	10-35386	219-235-240-241
REC10-37562	10-37562	225
REC10-37612	10-37612	239-240-241
REC10-43749	10-43749	227-229-233-237-239
REC10-45590	10-45590	295-302
REC10-53728	10-53728	221-222-227-229-233-237
REC10-53728	8M2000229	231-234
REC10-668631	668631	231-234
REC10-668631	10-668631	221-222
REC10-72094	10-72094	221
REC10-73657	10-73657	224
REC10-76156	10-76156	263-267
REC10-79953Q04	10-79953Q04	108-109-259-269-271
REC10-806290	10-806290	307-308
REC10-806327	10-806327	275-279-281-283
REC10-816601	10-816601	257-269-271-283
REC10-816928	10-816928	273-223
REC10-85486	10-85486	306-307-308
REC10-861788	10-861788	151-152
REC10-865982005	10-865982005	227-237-239
REC10-86801	10-86801	293-298
REC10-90926	10-90926	174
REC10-96411	10-96411	265
REC10-97934	10-97934	304
REC10-97934A1	10-97934A1	292-304
REC10-98794	98794	231
REC10-98794	10-98794	229-233-259-269-271
REC10615K	47-879312025	186-188
REC11-13436	11-13436	261-265
REC11-22339	11-22339	259-269-271-277
REC11-34933	11-134391	295
REC11-34933	11-34933	291-296
REC11-34933	11-859116	259-263-267-283-297-306-308

REF	OEM	
REC11-34933		256
REC11-35921	11-35921	263-267-275
REC11-52707Q1	11-52707Q1	262-263-266-267-274-275-279
REC11-8267089	11-8267089	223-261-265-296
REC11-859124	11-859124	263-267
REC11-859135	859135	194-269
REC11-859135	11-859135	271
REC11-859135		257
REC11-862902	11-862902	219-221
REC11-862903	82671013	305
REC11-862903	11-134371	293-298
REC11-862907	11-862907	283-317
REC11-863332	11-863332	304
REC11-8M0105210	11-8M0105210	283-317
REC1140639		119
REC11979-0001	47-896332063	188
REC12-18448	12-18448	275
REC12-191833	12-19183-3	283
REC12-191833	12-191833	259-263-267-269-271-275-277-279-281
REC12-191833		108
REC12-20084	12-20084	192-219-221-222
REC12-27880	12-27880	261-265
REC12-31211Q03	12-31211A2	275
REC12-31211Q03	12-31211Q03	263-267-279
REC12-31266	12-31266	261-265
REC12-32666	12-32666	259-295
REC12-32834	12-32834	304
REC12-35777	12-35777	304
REC12-39116	12-39116	295
REC12-44163	12-44163	306-308
REC12-44164	12-44164	308
REC12-45176	12-35935	269-271-295-297
REC12-45176	12-45176	257-283
REC12-45810	12-45810	259-269-271
REC12-46765	12-46765	305
REC12-72498	12-72498	295
REC12-815472	12-815472	292
REC12-815952	12-815952	307
REC12-835467Q01	13171	281
REC12-835467Q01	12-835467Q01	263-267-275-279
REC12-85058	12-85058	306
REC12-90931	12-90931	174
REC120		119
REC12110		189-260-261
REC12120	46-96148A8	189-264-265
REC12632A7	12632A7	304
REC12644A1	12644A1	254
REC12708	12708	277
REC12711	12711	277-302
REC127695-35150	35-19485	121
REC12784	12784	277
REC13-33734	13-33734	304
REC13-35048	13-35048	221-224-227-229-233-235-237-239-240-241-277
REC13-35048	21-20553	219-221-222-223
REC13-39107	13-39107	224
REC13-423511	13-42351-1	263-279
REC13-423511	13-423511	267-275
REC13037	13037	157
REC13037	8733261	157
REC13220	13220	138-142
REC1347-816373A4	1347-6492A1	134
REC1347-816373A4	1347-7362A1	134
REC1347-816373A4	1347-804624R02	134
REC1347-816373A4	1347-816373A4	134
REC1347-816373A4	1347-8292A4	134
REC1347-816373A4	1347-9415T	134
REC1347-816373A4	1347-9662A4	134
REC1347-816373A4	3310-804624R1	134
REC1347-816373A4		139-140
REC1347-818619R02	1336-3594A1	133
REC1347-818619R02	1347-818619/R02	133
REC1347-818619R02	1347-8186191	133
REC1347-818619R02	1351-4263A1	133
REC1347-818619R02	1351-4263A2/A3	133
REC1347-818619R02	1351-5202A1	133
REC1347-818619R02	1351-6065A2	133
REC1347-818619R02	1351-7354A1	133
REC1347-818619R02		139
REC1347-9661A3	1347-7361A1	132
REC1347-9661A3	1347-7364A1	132
REC1347-9661A3	1347-8296A4	132
REC1347-9661A3	1347-9661A3	132
REC1347-9661A3		139
REC1348-818621R02	1347-8186211	132
REC1348-818621R02	1347-818621R02	132
REC1348-818621R02	1348-818621/R02	132
REC1348-818621R02	1351-8480A2	132
REC1348-818621R02		139
REC13524A1	13524A1	169

REF	OEM	
REC13524A1	13524A5	169
REC13524A1	13524T1	169-174
REC13524A6	13524A4	169
REC13524A6	13524A6	169
REC13524A6	13524Q06	169-174
REC13524A6	19405A4	169
REC13524A6	90576A4	169
REC1376-818622R02	1347-818622	133
REC1376-818622R02	1347-8186221	133
REC1376-818622R02	1376-5659A1	133
REC1376-818622R02	1376-5744A1	133
REC1376-818622R02	1376-6152A1	133
REC1376-818622R02	1376-818622R02	133
REC1376-818622R02		139
REC1396-4148	1396-4148	142
REC1396-4656	1396-4656	138-141
REC1396-5238	1396-5222	139
REC1396-5238	1396-5238	139
REC1396-5238		171
REC1397-2060	1397-2060	136-139-140-141
REC1397-2150	1397-2150	113
REC1397-3327	1397-3327	136
REC1397-3327	1397-8546	136
REC1397-3327	1397-8959	136
REC1397-3327		139-140-141-142
REC1397-5831	1397-5831	139-141
REC1397-6367A1	1397-6367A1	138
REC1397-8582	1397-8582	142
REC1397-8760	1397-5830	137
REC1397-8760	1397-7099	137
REC1397-8760	1397-8760	137
REC1397-8760		139
REC1397-8767Q	1397-8545	112
REC1397-8767Q	1397-8767	112
REC1397-8767Q	1397-8767Q	112
REC1398-3089	1398-3089	138
REC13980	22-806608A1	219-221-222-249
REC14-18323	14-18323	267-275-279-281
REC14-44166T1	17-44166T1	308
REC14-79447	14-79447	263
REC14034A3	14034A3	306
REC14035A3	14035A3	306
REC14505A2	14505A2	304
REC14587A7	14587A5	267-275
REC1463-9382	38547	162
REC1463-9382	32193A2	162
REC1463-9382	392-806529A1	162
REC1463-9382	898253T24	162
REC15-32563A1	15-32563A1	259-269-271
REC15-35980A1	15-35980A1	259-269-271
REC15-36178A02	15-36178A02	269-271
REC15-36178A02	15-36178A02	259
REC15-401	84-813720A5	167-176
REC15-402	84-813720A5	167
REC15-405	84-813720A13	167
REC15-405	84-816761Q13	173
REC15-405		176
REC15-42637A1	15-42637A1	265-273
REC15-44491A1	15-44491A1	275
REC15-45691A1	15-45691A1	259-269
REC15-47397A1	15-47397A1	263-267-275
REC15-57007A1	15-57007A1	261
REC15-601	84-813720A11	167
REC15-601	84-816761Q16	173-174-176
REC15-604	84-813720A7	167
REC15-604	84-816761Q7	167
REC15-604		176
REC15-606	84-863656A2	167-175
REC15-71013	15-71013	259-269-271
REC15-801	84-813720A10	167
REC15-801	84-813720A8	167
REC15-801	84-813720A9	167
REC15-801		175-176
REC15-804	84-813720A2	167
REC15-804	84-813720A3	167
REC15-804	84-813720A4	167
REC15-804	84-816761A15	167
REC15-804	84-816761A2	167
REC15-804	84-816761A4	167
REC15-804	84-816761Q17	173-174
REC15-804	84-816781A15	167
REC15-804	84-816781A4	167
REC15-804	84-818781A4	167
REC15-804		176
REC15-808		167
REC15-813	84-863656A1	167-175
REC15-815	84-816608A1	167-175-176
REC15-86749A1	15-86749A1	279-281-283
REC15-92914A1	15-92914A1	279-281
REC15000K	3349198	188
REC15000K	3916720	188
REC15000K	47-853126	188
REC15000K	8M0056956	188
REC15000K		186
REC1547-815930A7	1547-815930A7	257-269-271

REF	OEM	
REC1547-861063A10	1547-861063A10	257
REC1547-861063A12	1547-861063A12	257
REC1547-861063A6	1547-861063A6	257
REC1547-861063A8	1547-861063A8	257
REC1547-9412A20	1547-9412A20	256
REC1547-9412A21	1547-9412A21	256
REC1547-9412A22	1547-9412A22	256
REC1547-9412A23	1547-9412A23	256
REC1589-865440H50	1589-865440H50	255
REC1589-865440H50	5-5231100NP	255
REC1589-865440H50	5-5231100TP	255
REC1589-865440H50	5-5231300NP	255
REC1589-865440H50	5-5441100TP	255
REC1589-865440H50	5-5441400TP	255
REC1589-865440H51	1589-865440H51	255
REC1589-865440H51	5-5231200NP	255
REC1589-865440H51	5-5231200TP	255
REC1589-865440H51	5-5441200TP	255
REC1589-865440H51	5-5441300TP	255
REC1589-865440H51	5-5441600TP	255
REC1589-865440H52	1589-865440H52	255
REC1589-865440H52	5-5121300TP	255
REC1589-865440H52	5-5441500TP	255
REC1589-865440H52	5-5441700TP	255
REC15995	15995	148-224
REC15W40U3		107-122
REC16-49545	16-49545	219-225-227-235-237-239-240-241
REC16-56826	16-56826	221
REC16-59579	16-59579	295-297
REC16-70236	16-70236	219-221
REC16-806300	16-806300	222
REC16-97520	16-97520	235
REC160ELEMENT		119
REC1623-5356A4	1623-5356A4	256-261
REC1623-815822A30	1623-815822A30	257-273
REC1623-815822A30	1623-815822A6	257
REC1623-815822A47	1623-815822A47	257
REC1623-815822A47	5-5111200TP	257
REC1623-815822A47	5-5111300TP	257
REC1623-815822A47	5-5111400TP	257
REC1623-815822A47	5-5111500TP	257
REC1623-815822A53	1623-815822A32	257
REC1623-815822A53	1623-815822A43	257
REC1623-815822A53	1623-815822A53	257
REC1623-815822A53	1623-815823A5	257
REC1623-815822A53	5-5121200TP	257
REC1623-815822A53	5-5121300TP	257
REC1623-815822A53	5-5121400TP	257
REC1623-815822A53	5-5121500TP	257
REC1623-815822A55	1623-815822A45	257
REC1623-815822A55	623-815822A55	257
REC1623-8951A33	1623-8951A33	256
REC1623-8951A33	5-5000147CP	256
REC1623-8951A33	5-5000162CP	256
REC1623-8951A33	5-5000181CP	256
REC1623-8951A33	5-5000194CP	256
REC1623-8951A37	1623-8951A37	256-265
REC1623-8951A43	1623-8951A43	256
REC1623-8951A43	5-5010147CP	256
REC1623-8951A43	5-5010162CP	256
REC1623-8951A43	5-5010181CP	256
REC1623-8951A43	5-5010194CP	256
REC1656-8866A55	1656-8866A55	255
REC1656-8866A55	5-5231100NP	255
REC1656-8866A55	5-5231200NP	255
REC1656-8866A55	5-5231300NP	255
REC1656-8866A63	1656-8866A63	255
REC1656-8866A63	5-5121300TP	255
REC1656-8866A63	5-5231100TP	255
REC1656-8866A63	5-5231200TP	255
REC1656-8M0046682	1656-8M0046682	255
REC1656-8M0046682	5-5441700TP	255
REC1656-8M0046733	1656-8M0046733	255
REC1656-8M0046733	5-5441100TP	255
REC1656-8M0046733	5-5441200TP	255
REC1656-8M0046735	1656-8M0046735	255
REC1656-8M0046735	5-5441300TP	255
REC1656-8M0046738	1656-8M0046738	255
REC1656-8M0046738	5-5441400TP	255
REC1656-8M0046738	5-5441500TP	255
REC1656-8M0046738	5-5441600TP	255
REC16755Q1	16755Q1	108-109-197-199-276-277-297
REC16792A39	16792A39	292
REC17-14872A1	17-14872A1	141-306
REC17-14873A1	17-14873A1	306
REC17-44166	17-44166	308
REC17-44167A1	17-44167A1	308
REC17-47617	17-47617	174
REC17-815953A01	17-815953A01	307
REC17-8M0065070		141-307
REC17-8M0073409	17-8M0073409	296
REC17-8M0073409	8M0073409	291
REC17-8M0084681	8M0020941	263-267-275
REC17000		204-205
REC17010		206

REF	OEM	
REC17020		208
REC17030		209
REC17040		212
REC17042		212
REC17046		212
REC17048		214
REC17100		204-205
REC17102		205
REC17110		207
REC17115		206
REC17116		207
REC17120		208-210
REC17125		208-210
REC17140		213-214
REC17146		213-214
REC17177A1	13447A1	175
REC17177A1	17177A1	175
REC17177A1	68521A3	175
REC17177A1	68521A4	175
REC17177A1	74905A3	175
REC17177A1	816148A1	175
REC17177A1	91823A3	175
REC17200		204-205
REC17207		214
REC17210		206
REC17211		206
REC17214		209
REC17220		208
REC17224		208
REC17230		209
REC17232		210
REC17240		212
REC17241		212
REC17242		212
REC17243		212
REC17246		212
REC17248		214
REC27-815528		223
REC17310		207
REC17320		209-210
REC17340		213-214-254
REC17341		254
REC17341		213-214
REC17342		213
REC17494A1	17494A1	180
REC1766160		119
REC17900		205
REC17903		205
REC17920		207
REC17921		207
REC17930		209-211
REC17931		209-211
REC17935		213-215
REC17937		213-215
REC17937-0001	47-879194186	188
REC17950		205
REC17970		207
REC17971		207
REC17980		209-210
REC17981		209-210
REC17982		209-210
REC18-32665	18-32665	259-295
REC18-5953		155
REC18-8114		135
REC18-8115		135
REC18-8549		219
REC18525A1	18525A1	156
REC18643A7	18643A7	304
REC18654A1	32734	300
REC18654A1	18654A1	295-297-300
REC18654A1	32734A3	300
REC18654A1		108-109
REC18920A1	18920A1	295-297
REC19-14842	19-14842	306-308
REC19-42682	19-42682	259
REC19-47579	19-47579	259
REC19-59504	19-59504	192
REC19-815951	19-815951	307
REC19-864689	19-864689	229-233
REC195141	33266	176
REC195141	52352	176
REC195141	58231	176
REC195141	62424	176
REC195141	87581	176
REC195141	195141	176
REC195141	87581T	176
REC21124849	879194363	146
REC21124852		207
REC21310		305
REC21370	17-14873A1	306
REC21380	17-14872A1	306
REC21390		305
REC21470		300
REC21622232	879150A87	175-176
REC21622232	884794A02	176
REC21622232	884794A1	176
REC21811		304
REC21920		308

REF	OEM	
REC21990		305
REC22-328022	22-328022	221-227-237-239-240-241-249
REC22-32803	22-32803	222-224-249
REC22-36382	22-36382	219-221-227-237-239-249
REC22-384071	22-384071	237
REC22-41622	22-41622	221-227-235-237-239-240-249
REC22-428611	428611	231-234
REC22-428611	22-428611	224-227-229-233-237-239-259-296
REC22-428611		249
REC22-67892A05	22-67892	281
REC22-67892A05	22-8M0058389	283
REC22-67892A05	8M0058389	263-267-275-277-279
REC22-67892A05		108-109
REC22-73379	73379	231-234
REC22-73379	10-74727	224
REC22-73379	22-73379	227
REC22-73379	22-73379	229-233-237-239-291
REC22-73379		249
REC22-860382	22-860382	295
REC22-861150T02	22-861150A1	185-295-297
REC22-861150T02	22-861150A2	185
REC22-861150T02	22-861150T02	185
REC22-861150T02		295-297
REC22-862225	22-862225	179
REC22-863786A1	22-863786A1	233
REC22-863786A1	863786A1	234
REC22-863786A1		229
REC22-865417	22-865417	295-297
REC22-866725	866725	231-234
REC22-866725	22-866725	221-224-229-233-235-237-239-241-241
REC22-866725		112-223
REC22-88847A1	22-88847A1	290-291-296
REC22-98477A2	22-98477A2	179
REC23-29804T	23-29804T	261-265
REC23-30617A2	23-30617A2	261-265
REC23-32632	23-32632	259
REC23-47508T		180
REC23-67370	23-67370	273
REC23-805041A2	23-805041A2	294-295-303
REC23-806036A1	23-806036A1	294-295-303-305
REC23-806922	23-806922	178-180
REC23-807073	23-807073	308
REC23-815921A21	23-815921A21	273
REC23-8159501	23-8159501	307
REC23-816583	23-816583	257-273
REC23-824108	23-824108	267-275
REC23-847637	23-847637	293-298
REC23-853853002	23-853853002	217
REC23-853855001	23-853855001	217
REC23-861209A1	23-861209A1	276-277-297-303
REC23-89574	23-89574	305
REC23-8M8000506	92916	281
REC23-8M8000506	23-92916	279-283
REC23-90915	23-90915	174
REC23-99291	23-99291T	306
REC23-99299	23-99299	304
REC23-99322	23-99322	292-304
REC24-17997A1	24-17997A1	269-271-277
REC24-30893	24-30893	267-275
REC24942		110
REC24950		110
REC24952		110
REC25-16524	25-16524	215
REC25-16524	25-20415	215
REC25-20081	25-20081	215
REC25-21836	25-21836	215-273
REC25-25439	25-25439	215-259-261-265-269-271
REC25-29845	25-29845	277
REC25-30224	25-30224	180
REC25-30224	25-30224Q	215
REC25-30271	25-30271	261-265
REC25-30529	25-30529	215
REC25-30613	25-30613	215-261-265
REC25-31534	25-31534	263-267-275-279-281
REC25-32546	25-32546	215-259-269-271
REC25-33145	25-33145	215-261
REC25-33465	25-33465	192-215-279-283
REC25-33465	25-54029	215
REC25-33465	25-822370	279-281
REC25-35027	25-35027	269-271-277
REC25-35029	25-35029	215
REC25-36318	25-36318	273
REC25-38099	25-38099	215-265
REC25-38101	25-38101	215
REC25-38933	25-38933	215

REF	OEM	
REC25-457101	25-457101	215-277
REC25-48171	25-48171	215-295-297
REC25-55801	25-55801	215-259
REC25-62700	25-62700	215
REC25-62705	25-62705	215-277-295-297
REC25-62706	25-62706	277
REC25-62706	25-62707	215
REC25-67202	25-67202	215
REC25-70937	25-70937	215-259-269-271
REC25-80863	25-20863	215
REC25-811461	811461	143
REC25-823683	25-823683	215
REC25-87400A2	25-87400A2	307-308
REC25-89497	25-89497	215
REC25-8M0084884	25-26802	183
REC25-8M0084884	25-8071341	183
REC25-8M0084884	25-8M0039163	183
REC25-8M0084884	8M0084884	183
REC25-90011	25-90011	215-265-273
REC25-94288	25-94288	192
REC25-97387	25-97387	215-277
REC25000		110
REC25010		110
REC25020		110
REC25030		110
REC25W40U3		104-105-106-107-115
REC26-12224	26-12224	216-263-267-275
REC26-12709	26-12709	216
REC26-12709	26-127091	277
REC26-14240	26-14240	216-217
REC26-14756	26-14756	213-214-216
REC26-16709A2	26-16709A2	276-277
REC26-16977	26-16977	216-261-265
REC26-24590	26-24590	216
REC26-24590	26-31249	216
REC26-24590	26-892361	216
REC26-30913	26-30913	216
REC26-32511	26-32511	216-259
REC26-32511A1	26-32511A1	258-259
REC26-32911	26-32911	216
REC26-33144A2	26-33144A2	260-261-264-265
REC26-33467	26-33467	216
REC26-34217	26-34217	216
REC26-36556	26-36556	279-281
REC26-36557	26-36557	259
REC26-38970	26-38970	261-265
REC26-419533	26-41953	216
REC26-43035	26-43035	216
REC26-43036	26-43036	216
REC26-43993	26-43993	216-277
REC26-455771	26-45577 1	108-216-263-267-273-279-281-283
REC26-45587	26-45587	216
REC26-54925	26-54925	291
REC26-55682	25-55682	216
REC26-55682	26-55682	216-291
REC26-56397	26-56397	216
REC26-56788	26-56788	216
REC26-62818	26-62818	216
REC26-66302	26-66302	216-269-271-273
REC26-67388	26-67388	216-217
REC26-69188	26-69188	216
REC26-69189	26-69189	216
REC26-70081	26-70081	216
REC26-72785	26-72785	192-216
REC26-75624	26-75413	216
REC26-75624	26-75624	216-217
REC26-75988	26-75988	216
REC26-76868	26-14077	216-275
REC26-76868	26-76868	216-263-267-279-281
REC26-76868A04	26-76868A04	278-279-280-281-282-283
REC26-79831	26-79831	216
REC26-805344	26-805344	279-281-283
REC26-807006	26-807006	216-277
REC26-811554	26-811554	216-217
REC26-8164641	26-816464-1	273
REC26-8164641	26-8164641	216-261-265
REC26-816575A2	26-816575A2	273
REC26-816575A3	26-816575A3	272-273-278
REC26-821092	26-821092	216
REC26-8219471	26-8219471	216-217
REC26-823894	26-823894	216-259-269-271
REC26-861694	26-805080	216
REC26-861694	26-861694	283
REC26-864319	26-864319	271-273
REC26-88397	26-88397	269-271
REC26-88397A1	26-88397A1	268-269-270-271
REC26-88416	26-88416	291-296
REC26-89238	26-89238	216-261-265
REC26-892683	892683	128

REF	OEM	
REC26-892683	26-892683	129
REC26-897153	26-96063	216
REC26-8M0033407	26-8M0033407	283
REC26-8M0150312	26-804507	216
REC26-8M0150312	26-8M0150312	216
REC26-8M2005029	26-416071	291-296
REC26-90562	26-90562	192-216
REC26-90925	26-90925	216-217
REC26-94038	26-94038	216
REC26-965031	26-965031	216-259
REC2656613		119
REC26900		172
REC26901		172
REC26904		172
REC26905		172
REC27-13709	27-13709	217
REC27-142471		207
REC27-14250	27-14250	215
REC27-18272	27-18272	224-251
REC27-33179Q02	27-33179Q02	180
REC27-33395	27-33395	233-235-237-249-253
REC27-33395	8M2000819	209-234
REC27-33918	27-8M2021920	181
REC27-33956	27-33956	187
REC27-34213	27-34213	124-125
REC27-344861	27-34486-3	174
REC27-34897	27-34897	187
REC27-34898	27-34898	125
REC27-35898T	27-35898T	218
REC27-39915	27-39915	218-251
REC27-39917	27-39917	218-250
REC27-41609	27-41609	137-140
REC27-418122	27-418122	181
REC27-41812Q	27-41812	181
REC27-41812Q	27-41812Q	181
REC27-42457	27-42457	125
REC27-426311	27-42631-1	265
REC27-430331	27-430331	273
REC27-46820	27-46820	213-239-240-253
REC27-47510Q	27-47510Q	180
REC27-475901	27-47590-1	181
REC27-47644-1	27-47644-1	290-291
REC27-48042	27-48042	240-251
REC27-480431	27-40431	241
REC27-480431	27-480431	219-225-235-240-250
REC27-48399	27-48399	137-141
REC27-48818Q01	27-48818Q01	181
REC27-49110	27-49110	187
REC27-49953	27-49953	215
REC27-524572	27-524572	137-139-140-141-142
REC27-52546	27-52546	204-218-252
REC27-53045Q01	53051	181
REC27-53045Q01	27-53045Q01	181
REC27-53354	27-53354	205-219-252
REC27-54014Q1	27-54014Q1	108-299
REC27-54506	27-5450	181
REC27-54529	27-54529	215
REC27-558101	27-55810 1	259
REC27-56108	27-56108	215
REC27-56880	27-56880	187
REC27-60208Q	27-60208	181
REC27-60715	27-60715	137-141
REC27-64692	27-64692	137-139-140-141-219-221
REC27-64818Q4	26-64818Q4	259
REC27-64818Q4	27-64718A1	259
REC27-64818Q4	27-64818Q4	295-299
REC27-64818Q4		258
REC27-65577	27-65577	137
REC27-68714A6	27-68714	201-203-215
REC27-68715	27-68715	217-224-252
REC27-70142	27-70142	137-139
REC27-70905	27-70905	217
REC27-72479A5	27-72479A5	217
REC27-72805	27-72805	125
REC27-73666	27-73666	217
REC27-74830	27-74830	180
REC27-803192A2	24-803192A2	187
REC27-8052151	27-8052151	192
REC27-805396	27-805396	137
REC27-805760	27-805760	174
REC27-807218	27-807218	219-221-225-250
REC27-807473A1		209-210-254
REC27-8079821	8079821	137
REC27-8079821	27-70143	137
REC27-8079821	27-701431	137
REC27-8079821	27-807982	137
REC27-8079821	27-8079821	137-221-222
REC27-8079821		139-140-141
REC27-8146801	27-8146801	180
REC27-815528	27-815528	205-222-223-252
REC27-8172771	27-8172771	273
REC27-850456	27-85046	215
REC27-856081	27-856081	261-265

REF	OEM	
REC27-856704	27-856704	261
REC27-856705	27-856705	224-251
REC27-856705	27-97542	251
REC27-858524	27-858524	261-265
REC27-863724Q	27-41813	251
REC27-863724Q	27-860233	251
REC27-863724Q	27-863724	251
REC27-863724Q	27-863724Q	227-237-239-251
REC27-8637251	860231	251
REC27-8637251	863725	251
REC27-8637251	27-8637251	227-237-239-251
REC27-863726	27-818832	251
REC27-863726	27-860232	251
REC27-863726	27-863726	251
REC27-863726	27-863726	227-237-239-251
REC27-863726	27-871051	251
REC27-864547A02	27-864547A02	252
REC27-864850A02	27-864850A02	252
REC27-89656-1	27-89656-1	181
REC27-89656-1	27-896561	224
REC27-8M0094247	24-8M0094247	143
REC27-8M0094247	27-801333454	143
REC27-8M0094247	27-854129	143
REC27-8M0094247	27-898101475	143
REC27-8M0094247		143
REC27-94914	27-94914	192
REC27-94996Q2	27-94996Q2	269-271-299
REC27-94996Q2		108-109-268-270
REC27-94996Q2	27-94996Q2	295
REC27-96429	27-96429	205-221-253
REC27-988231	27-988231	291-296
REC27-995061	27-995061	290-291
REC27-99757	99757	231
REC27-99757	27-99757	207-227-229-230-252
REC27-99777Q02	27-997771	251
REC27-99777Q02	27-997772	251
REC27-99777Q02	27-99777Q02	219-221-222-225-235-241-251
REC27-99960	27-99960	251
REC270	27-684547A02	229
REC270	27-864547A02	233-251
REC270	27-864549A02	251
REC270	27-864550A02	251
REC270		228-229-233
REC28-30281	28-30281	263-267
REC28-8M0032833	28-8M0032833	273
REC294005		173
REC296TWIN		119
REC30-72961	30-72961	192
REC30-879194A01	30-879194A01	291-296
REC30-879194A01	879194A01/A02	296
REC30-879194A01		108-109-290-296
REC30-88957T	30-88957T	263-267
REC30-88957T	30-88957T1	275
REC30-98475T1	30-98475T1	179
REC300-00879	392-7803A4	161
REC300-00879	392-805570A2	161-174
REC300-8M0044991	300-8M0044991	161
REC300-8M0044991	8M0029482	161
REC301967	25-36318	215
REC302035	25-48452	215
REC302537	25-33466	215
REC302588	25-26722	215
REC303347	25-26802	215
REC304174	25-32509	215
REC304454	13-69432	307-308
REC305123	25-33756	215
REC308627	25-20826	215-279-281-283
REC309731	25-29439	215
REC31-15842	31-15842	275
REC31-15844	31-15844	275
REC31-30894A1	31-30894A1	275
RM31-30894A5	31-30894A5	271
REC31-30895T	24-30893	263
REC31-30895T	31-30895T	263-267-275
REC31-32573A1	31-32573A1	259-271
REC31-32575T1	31-32575T1	259-271
REC31-32575T1	31-32575T1	269
REC31-33138A1	31-33138A1	273
REC31-35928T1	31-35928T1	263-267-275
REC31-35988A12	31-35988A12	259-269
REC31-35990A1	31-35990A1	259-269-271
REC31-36387A1	31-36387A1	265-273
REC31-53079A1	31-53079A1	261
REC31-54042T	31-54042T	279-281
REC31-61100A1	31-61100A1	259-269
REC31-66668A1	31-66668A1	281
REC31-66668A1	31-99328A1	279-283
REC31-66668A1	66668A1	279
REC31-66818A1	31-66818A1	259
REC31-814653T	31-814653	275
REC31-815900	31-815900	277

REF	OEM	
REC31-828437A2	31-828437A2	267-275
REC31-828439A2	31-828439A2	275
REC31-86748A1	31-86748A1	283
REC31-86748A1	31-86748A1	279-281
REC31-86752A1	31-86752A1	279-281-283
REC31-86754T	31-86754T	279-281
REC31-86763A2	31-86763A2	277
REC31-86771	31-86771	277
REC31-87156	31-87156	277
REC31-92366A1	31-92366A1	263
REC310414	25-47254	215
REC310584	25-35276	215
REC310599	26-26226	216
REC313175	25-67202	215
REC313715	10-865321	283
REC31640Q4	31640Q4	284-285
REC31640Q4AL	31640Q4	108-284-285
REC32-14358001	14358001	231
REC32-14358001	32-14358	253
REC32-14358001	32-14358001	227-220-230-233-237-239-253
REC32-14358001	32-14358T	253
REC32-16012	32-16012	199-201
REC32-160211	32-160211	200-201-202
REC32-32461	32-32461	198-291-295
REC32-32461	32-32461A1	198-108
REC32-33189	32-33189	199-201-202-203
REC32-33220	32-33220	200
REC32-33220	32-3322070	200
REC32-33220	32-8M0062614	200
REC32-33220		201
REC32-4172533	32-4172533	198-291-295
REC32-4172533	32-8M0062309	198
REC32-4172533		108-109
REC32-43437	32-43437	109-198-296
REC32-44348001	44348001	231
REC32-44348001	32-44348	253
REC32-44348001	32-44348001	221-222-227-229-230-233-237-239-253
REC32-44348001	32-44348T	223-253
REC32-48132	32-48132	201-202-203
REC32-52481	32-52481	198-200-201-202
REC32-54236	32-54236	259
REC32-55816	32-55816	309
REC32-55816	33-55816	305
REC32-58432A2	32-58432A2	305-309
REC32-59841	32-59841	305-309
REC32-59842	32-59842	305-309
REC32-8066351	32-8066351	200-201-202-203
REC32-8066361	32-8066361	200-201-202-203
REC32-806856	32-806856	199-201-202-203
REC32-807407	32-807407	199
REC32-807458T	32-807458T	253
REC32-807661	32-807661	199-201-202
REC32-807697	32-807697	200-201-202-203
REC32-808033	32-808033	199
REC32-8080441	32-808044-1	199
REC32-8600891	32-8600891	199-203
REC32-860205	32-860205	199-201-203
REC32-860220	32-860220	269-271
REC32-86036	32-86036	305
REC32-86036	32-86036	309
REC32-86036	32-86036Q	309
REC32-861127	32-861127	306-307-308-309
REC32-861127	32-95858	309
REC32-861128	32-861128	306-307-308-309
REC32-862124	32-862124	200
REC32-862139	32-862139	200
REC32-864588	32-864588	306-308-309
REC32-864588	32-99903	309
REC32-864589	32-864589	306-308-309
REC32-864589	32-99902	309
REC32-864959	32-864959	306-307-309
REC32-864959	32-99903-1	309
REC32-864960	32-864960	306-307-309
REC32-864960	32-99902-1	309
REC32-871171	32-87117	200
REC32-871171	32-871171	200
REC32-871171		201-202-203
REC32-87234	32-87234	309
REC32-87235	32-87235	309
REC32-88795	32-88795	199
REC32-887952	32-887952	199-201-202
REC32-89653	32-89653	198
REC32-897181	32-897181	199-202-203
REC32-897491	32-89749-1	200-202-203
REC32-897491	32-897301	200
REC32-8M0071007		201
REC32-90949T	32-90949T	221-223-224-227-237-239-253
REC32-96246A4	32-96246A4	199-201-202

REF	OEM	
REC32-99904	32-99904	309
REC32-99904	32-99904Q	307-308
REC32-99904	32-99904Q	306
REC32077	25-896332077	184
REC32126	25-89633	183
REC32126	25-896332126	183
REC32175		227-228-229-230
REC321921	25-35480	215
REC324351	324351	261-265
REC326649	25-45711	215
REC326849	25-39695	215
REC3302-804689	3302-804689	136-140-141
REC3302-804844002	3302-804844002	139-140-141-171
REC3302-804845	3302-804845	138
REC3302-804845	3302-9437	138
REC3302-804845		139-140-141
REC3302-9031	1397-5837	136
REC3302-9031	3302-9031	136
REC3302-9031		139-140-141
REC3302-9407	3302-9407	136-140-141
REC3304-9354A2	1347-804623R1/02	132
REC3304-9354A2	3304-9354A2	132
REC3304-9354A2		139
REC3310-807312A1	1389-9670A2	133
REC3310-807312A1	3310-807312A1	133
REC3310-807312A1	3310-807312R02	133
REC3310-807312A1		139
REC3310-860070A2	1389-9562A1	135
REC3310-860070A2	3310-806077A2	135
REC3310-860070A2	3310-806078A2	135
REC3310-860070A2	3310-815396A2	135
REC3310-860070A2	3310-860070A2	135
REC3310-860070A2	3310-9350A2	135
REC3310-860070A2	3310-9562A1	135
REC3310-860070A2		140
REC3310-864941A01	3310-864941A01	134-140
REC3310-864942A01	3310-861448A1	135
REC3310-864942A01	3310-864942A01	135
REC3310-864942A01		140
REC3310-864943A01	3310-861245A1	134
REC3310-864943A01	3310-864943A01	134
REC3310-864943A01		140
REC331188	25-65936	215
REC331880	17-35973	267
REC333572	25-26543	215
REC333572	25-64068	215
REC33662	6325	170
REC33662	33662	170
REC33662	898253003	170
REC33662	898253005	170
REC33662	33662Q	170
REC33662	8M6001218	170
REC33662	FI6900031	170
REC33662		171
REC33700	33700	170
REC33706	33706	170
REC33708	33708	168
REC33765		238-239-241
REC33765T	33765	168
REC33765T	33765T	168
REC34127T2	34127	285
REC34127T2AL	34127	285
REC34235T	34235	170
REC34235T	34235T	170
REC34235T		171
REC3423A1	34235A1	170
REC3423A1	34235Q1	170
REC3423A1		171
REC34765A2	34765A2	254
REC35-06003	35-866340Q03	104-105-106-107-114
REC35-06004	35-883702Q	104-105-114
REC35-06007	60565	114
REC35-06007	35-802886Q	114
REC35-06007	35-8M0116378	114
REC35-19486	35-19486	116
REC35-19486	35-8M0103963	116
REC35-19487	35-19487	120
REC35-49088A2	35-49088A2	113
REC35-49088A2	35-49088Q2	113
REC35-49088A2		124
REC35-53336	3302-9033	113
REC35-53336	35-53336	113
REC35-53336	35-53336Q	113
REC35-802893Q		104-105-106-107-110
REC35-802893Q01		104-105-110
REC35-805312	35-805312	120
REC35-805809	35-805809	121
REC35-805809	35-805809T	121
REC35-807256	35-807256T	116
REC35-808275	35-808275	116
REC35-816168	35-816168	122
REC35-865266		223
REC35-866171A01	35-866171A01	112
REC35-866171A01	866171A01	128
REC35-866171A01		105-106-107
REC35-879172104	35-879172104	107-116

REF	OEM	
REC35-879172143	35-879172143	107-120
REC35-879312041	35-879312041	107-121
REC35-892665	892665	128
REC35-892665	35-892665	105-106-107-113
REC35-898272048	35-898272048	107-120
REC35-8M0046752	35-11004A1	112
REC35-8M0046752	35-803897Q1	112
REC35-8M0046752	35-8M0046752	112
REC35-8M0046752		124-125
REC35-8M0066483	35-8M0066483	107-121
REC35-8M0067337	35-8M0067337	107-116
REC35-8M0122423	35-884380T	112
REC35-8M0122423	35-8M0020349	112
REC35-8M0122423	35-8M0060041	112
REC35-8M0138697	35-881132T	114
REC35-8M0138697	35-8M0138697	114
REC35-8M6002131	35-8M6002131	107-120
REC35-8M6002390	35-8M6002390	116
REC350038	12-92721	267
REC350038	12-92721	275
REC3517857	35-803470	121
REC3517857	35-80470Q	121
REC3581078		119
REC3581760	3581760	117
REC35915	35915	263
REC3593573	47-816814T	188
REC35983	35983	259
REC35983	35983	269
REC35983	35983	271
REC36223A2	36223	299
REC36223A2	36223A1	299
REC36223A2	36223A2	299
REC378444	25661	157
REC378444	25661T1	157
REC3841697	47-801332602	188
REC3843100	879172105	147
REC3843751	803149	145-149-150
REC3850396	805217A1	144
REC3850396	864856A1	144
REC3850396		149-150
REC3850397	805218	148
REC3850397	805218T	148
REC3850397		149
REC3850559	35-16595Q	114
REC3850559	35-16595Q	121
REC3850559	35-16595T1	121
REC3850559	35-52731	121
REC3850812	75832	277
REC3850812	75832T1	259
REC3850812	75832T1	269
REC3852045	25-62704	215
REC3852106	57-32850	198
REC3852106	57-69143Q	198
REC3852106		104-195-196
REC3852455	27-73866	241
REC3852455	27-73866	253
REC3852455		208-211
REC3852865	25-805331	215
REC3852865	25-805331	283
REC3852866	25-31986	215
REC3852928	25-26855	215
REC3853341	36-97335	211-216-217
REC3853796	883885	186-187
REC3853801	392-9089	169
REC3853801	392-9089Q	169
REC3853801	392-9089T	169
REC3853801	392-9767	169
REC3853801	FI6900186	169
REC3853801	FI6900190	169
REC3853801		171-172
REC3853839	87-76416A1	157
REC3853847	56153	217
REC3853869	89-18080	157
REC3853869	89-853654A1	157
REC3853869	89-99253	157
REC3853869		151-152
REC3854001	811639	145
REC3854001	811639T	145
REC3854001	811639T	162
REC3854001	811639T	173
REC3854002	898253T27	161
REC3854002	898253T27	173
REC3854003	802464	162
REC3854003	804412	162
REC3854003	811637	162
REC3854003	817378	161
REC3854003	850487	162
REC3854003	81637002	162
REC3854003	811637001	162
REC3854003	811637001	173
REC3854003	811637T	162
REC3854002	817378T	161
REC3854138	828151	158
REC3854138	882751	158
REC3854138	828151A1	158
REC3854138	882751A1	158
REC3854138	882751A2	158
REC3854190	50-12782	151

REF	OEM	
REC3854190	50-56886	151
REC3854190	50-69865A1	151
REC3854260	3854260	173
REC3854261	811636	169
REC3854261	8116361	169
REC3854261	898253011	169
REC3854261	8M6001254	169
REC3854261	8M6001254	173
REC3854311	804424	169
REC3854311	850485	169
REC3854311	850485	173
REC3854311	8504851	169
REC3854311	898253012	169
REC3854311	8M0062084	169
REC3854331	850484	168
REC3854331	3854331	173
REC3854331	393-3230	168
REC3854331	393-4988T	168
REC3854331	393-4988T2	168
REC3854331	393-9459Q1	168
REC3854331	850484T	168
REC3854331	850484T2	168
REC3854548	804418	168
REC3854548	808483	168
REC3854548	3854548	173
REC3854548	804483T	168
REC3854548	808483T3	168
REC3854549	808484	169
REC3854549	8084841	169
REC3854549	898253010	169
REC3854549	8M6001253	169
REC3854549	8M6001253	173
REC3854549		168
REC3855194	805224A1	145-149-150
REC3858261	805025A2	127
REC3858261	805656A2	127
REC3858261	805656A5	127
REC3858261	805656A6	127
REC3858261	861155A5	127
REC3858261	861155A6	127
REC3858462	57-45856	198
REC3858462	57-49213A1	198
REC3858462	57-93658Q	198
REC3858462		105-195-196
REC3858941	852956A1	130-149
REC3858984	GM10482803	162
REC3859054	809463A1	151-152-157
REC3859078	392-889925	161
REC3860769	12449	153
REC3860769	19685	153
REC3860769	98555	153
REC3860769	817119	153
REC3860769	817119A1	153
REC3860769	817119A4	153
REC3861267	392-881732	161
REC3861985	392-863704T	161
REC3861985	392-8M0054588	175
REC3861985	8M0054588	161
REC3861985		162
REC3863130	898141	146-175
REC387247	31-30956T	263-267-275
REC387817	31-42647A1	267-275
REC3885317	50-864340A2	151
REC39-74381A1	39-74381A1	217
REC391-5090	391-5090	170
REC391-5090	391-898253004	170
REC391-5090	8M6001250	170
REC391-5090		171-172
REC391-5090Q1	391-5090A1	170
REC391-5090Q1	391-5090Q1	170
REC391-5090Q1		171-172
REC3916854	50-805991	152
REC392-6316	392-6316	176
REC392-6324Q1	392-6324A1	171
REC392-6324Q1	392-6324Q1	171
REC392-6324Q1	392-6324T1	171
REC392-6324Q1		171-172
REC392-6325Q1	392-6325A1	171
REC392-6325Q1	392-6325Q1	171
REC392-6325Q1	392-6325T1	171
REC392-6325Q1		171-172
REC392-6330	392-6330	176
REC392-9086T	392-9086	168
REC392-9086T	392-9086T	168
REC392-9766	392-9766	168
REC392-9766	392-9766Q1	168
REC392-9766	392-9766T	168
REC392-9766	FI6900185	168
REC393-4988	393-3230	168
REC393-4988	393-4988	168
REC393-4988	393-4988T	168
REC393-4988	393-4988T2	168
REC393831	393831	269-271-277
REC393831	3938311	259
REC40005334	88751A02	175
REC40005334	888751A03	175
REC40005334	888751A1	175
REC41400		147

REF	OEM	
REC41641A8	41641A8	279-281
REC41674T	41674T	296-297
REC41802	41802	227-229-231-233-237-239-291-296
REC42419A1	42419A1	156
REC42419A1	862548A1	156
REC425062	807289A1	254
REC42600A09	42600A09	159
REC42600A09	42600A1	159
REC42600A09	42600A3	159
REC42600A09	42600A5	159
REC42724A3	42724A3	259
REC42785	42785	155
REC43-18411A2	43-18411A2	259-269
REC43-18411A2	43-18411A4	259-268-269
REC43-45814A5	43-45814A5	259-269
REC43-55778A3	43-55778A3	259-269
REC43-75325A3	43-75325A3	259-269
REC43-818807	43-818807	174
REC43-828073A1	43-828073A1	267-275
REC43-853640A2	43-853640A2	271
REC43-853641A2	43-853641A2	271
REC43-853642A2	43-853642A2	271
REC43-853643A2	43-853643A2	271
REC43-878087A2	43-878087A2	274-275
REC43-878617A2	43-853592A2	275
REC43436	43436	292-303
REC43713	43713	291-296
REC43994A2	43994	285
REC43994A2AL	43994	285
REC44-8146061	44-8146061	267
REC44-8146061	814606 1	275
REC44-824110	44-824110	263-267-275
REC44-850308	44-850308	275
REC45-41939F1	45-41939F1	261
REC45-42634	45-42634	265
REC45-55796	45-55796	259
REC45-557961	45-55796-1	269
REC45-557961	45-557961	271
REC45-816919	45-816919	273
REC45-853648	45-853648	273
REC45518A3	45518A3	295-302
REC45518T1	45518T1	295-302
REC45589A3	45589A3	295-302
REC46-44292Q03	46-44292Q03	189-265
REC46-48748T1	2495186	189
REC46-48748T1	2763441	189
REC46-48748T1	46-48748A1	189
REC46-48748T1	46-48748T1	189
REC46-64141A11	46-64141A11	189-260-261
REC46-72774A32	46-59112A2	187
REC46-72774A32	46-63450A2	187
REC46-72774A32	46-72774A11	187
REC46-72774A32	46-72774A32	187
REC46-72774A32	46-73823A7	187
REC46-72774A32	46-807151A12	187
REC46-807151A14	46-807151A14	192
REC46-807151A14	807151A14	191
REC46-807151A9	46-807151A9	186
REC46-862914T10	46-862914T10	187
REC46-8M0113733	884727	185
REC46-8M0113733	8M0113733	185
REC46-8M0113733		187
REC46-8M0113734	8503991	185
REC46-8M0113734	8M0113734	185
REC46-8M0113734		187-193
REC46-8M0113735	8504541	185-187-193
REC46-8M0113736	883925	185
REC46-8M0113736	8M0113736	185
REC46-96148A8	46-60367A1	190
REC46-96148A8	46-96148A5	190
REC46-96148A8	46-96148A8	190
REC46-96148T1	46-96148T1	261-265
REC46020T02	46020T02	259-269
REC46335	46335	219-221-222-224-225-227-235-237-239
REC46335	11-46335	240-241
REC46399	46399	285
REC46399AL	46399	285
REC47-43026Q02	47-43026Q02	109-188-273
REC47-43026Q06	47-43026Q06	108-190
REC47-59362A4	47-59362A4	187-191
REC47-59362Q01	47-59362Q01	104-105-106-185-186-187-188-192
REC47-59362Q08	47-59362Q08	191
REC47-59362T5	47-59362T5	191
REC47-59362T6	47-59362T6	191
REC47-809866T	47-809866T	188
REC47-809866T	47-831311350	188
REC47-862232A2	47-862232A2	188
REC47-862232A2	47-8M0104229	188
REC47-862232A2		104-105-106-107-187
REC47-89984Q5	47-89984Q5	108-190-260-161-264-265
REC47-89984T4	47-89984T4	108-188-261-265
REC47441A1	47441A1	180

REF	OEM	
REC47820A1	47820	285
REC47820A1AL	47820	285
REC48752T	48752T	261-265
REC48952	48952	148
REC50-806965A4	50-806963A2	152
REC50-806965A4	50-806965A4	152
REC50-806965A4	50-863007A1	152
REC50-8M0090697	50-806965A2	152
REC50-8M0090697	50-806965A4	152
REC50-8M0090697	50-812429A2	152
REC50-8M0090697	50-8M0090697	152
REC50-808011A05	50-808011A05	151
REC50-808011A05	50-80811A4	151
REC50-808011A05	50-88671A1	151
REC50-863007A1	50-863007A1	151
REC50-8M0095471	50-8M0095471	151
REC50-97499A2	50-47454	152
REC50-97499A2	50-65785A1	152
REC50-97499A2	50-72550A2	152
REC50-97499A2	50-79604A3	152
REC50-99418A2	50-864340A2	151
REC50-99418A2	50-99418A2	151
REC500442		173
REC500MA	35-850481	119
REC500MA	35-850481A1	119
REC500MACON		122
REC52-853594T	52-853594T	263-267-275
REC53-23720	53-23720	192
REC53-29641	53-29641	265-273
REC53-805272	53-805272	308
REC53-815949	53-815949	108-307
REC53-88242	53-88242	279-281-283
REC53114A1	53114	253
REC53114A1	53114A1	219-225-253
REC53400		227-230-236-237-238-239-258
REC54-38863	54-38863	291-296-300
REC54-815504320	54-815504320	108-291-296-300
REC54-815504412	54-815504412	295
REC54-86049	54-86049	295-297-300
REC55005		314
REC55006		314
REC55131A5	55131A5	178
REC55134		314
REC553126	25-31305	215
REC55989Q9	55989Q9	109-285-291
REC55989Q9AL	55989Q9	108-285
REC55989Q9M	55989Q9	285
REC57-13457Q	57-13457Q	105-195-196-198
REC57-34359	57-34359	198
REC57-34359	57-37619T,Q	198
REC57-34359		105-195-196
REC57-36356	57-36356	198
REC57-48122Q	57-48122Q	196-198
REC57-49043A1	57-49043A1	198
REC57-49043A1	57-64032Q1	198
REC57-49043A1		104-195
REC57-52692	57-52692	198
REC57-64416	57-49211	198
REC57-64416	57-64416	198
REC57-65607Q	57-65607T	104-195-198
REC57-78200Q1	57-78200Q1	196-198
REC57-807755Q04	57-807755Q04	197
REC57-807755Q05	57-807755Q05	197
REC57-816295Q	57-816295Q	104-195-196-198
REC57-817113	57-817113	197
REC57-861049Q	57-861049Q	197
REC57-861757Q	57-861757Q	197
REC57-861758Q	57-861758Q	197
REC57-861759Q	57-861759Q	197
REC57-865615Q01	57-865615Q01	197
REC57-865615Q02	57-865615Q02	197
REC57-865615Q03	57-865615Q03	104-105-197
REC57-865615Q04	57-865615Q04	104-105-197
REC57-865615Q05	57-865615005	197
REC57-865615Q06	57-865615Q06	197
REC57-865615Q07	57-865615Q07	197
REC57-865615Q08	57-865615Q08	104-105-197
REC57-865615Q10	57-865615010	197
REC57-879150023		195
REC57-879172120	57-879172120	107-198
REC57-879194425	57-879194425	198
REC57-879194425	57-898101624	198
REC57-879194425		107
REC57-882531	57-882531	198
REC57-882531	57-882531T	198
REC57-898101579	57-898101579	107-198
REC57-898101580		195
REC57-8M0088876	57-8M0088876	197
REC57-8M0093495	57-8M0093495	198
REC57-8M0093495	8M0067268	198
REC57-8M0093495		107
REC57-8M0097728	57-8M0074767	197
REC57-8M0097728	57-8M0097728	197
REC57-8M0097728		197
REC57-91035Q1	57-91035Q1	195-196-198

REF	OEM	
REC57-96834Q		196
REC58033	58033	170
REC58033	898253007	170
REC58217	58217	169
REC58217	898253008	169
REC58217	58217Q	169
REC58217	8M6001251	169
REC59078Q3	59078Q3	104-181
REC59501A1	59501A1	192
REC59503	59503	191
REC59826A3	59826A3	303
REC59830A7	59830A7	259-269-271
REC59830A7	814819A3	277
REC60207	60207	235-241
REC60252A2	60252A2	219-221-225-235-241-250
REC60930	60930	223-253
REC60932A4	60932A1	299
REC60932A4	60932A4	295-299
REC60932A4		108
REC62092T	54552	124
REC62092T	62092	124
REC62092T	62092T	124
REC62092T		125-126
REC621041	621041	259-295-302
REC64851	58034	170
REC64851	81-64851	170
REC64851		171-172
REC65057T1	65057A1	157
REC65057T1	65057T1	157
REC65533A1	65533A1	291
REC65864	65864	169
REC65864	78016	169
REC65864		171-172
REC65L-13915-00	808504	113
REC65L-13915-00	8085041	113
REC65L-13915-00	808504T1	113
REC65L-13915-00		106
REC66081A2	66081A2	259-269-271
REC681001	681001	267-275
REC69354A2	69354A2	217-303
REC69729	56045	153
REC69729	59755	153
REC69729	69729	153
REC69729	78403A2	153
REC70125A02	70125	142
REC70125A02	70125A02	142
REC70125A02	70125A1	142
REC70720		123
REC70817B	26-8M0050563	216
REC70817B	26-97664	216
REC70817B	26-976641	216
REC70981A3	70981A3	221-224-221-235-237-239-253
REC71464A01	71464	142
REC71464A01	72625	142
REC71464A01	71464A01	142
REC71831	64850	170
REC71831	87-71831	170
REC71831		171-172
REC73873A1	73873A1	292
REC74639Q02	74639Q02	108-109-291-296-299-300
REC75832T	75832T	259-269
REC7614T1	76214	285
REC7614T1AL	76214	285
REC76214Q5	76214Q5	284-285
REC76214Q5AL	76214Q5	109-284-285
REC762144	76214-4	285
REC762144AL	76214-4	285
REC76325A2	76325A2	221-225-245-251
REC76771A2	76771A2	245
REC76771A2	76771A3	245
REC76771A2		219-235-251
REC76850A2	76850A2	304
REC76865	76865	263-267-275
REC77123	77123	293
REC774811	774811	261-265
REC78403A2	78402	153
REC78403A2	78403A1	153
REC78403A2	78403A32	153
REC78403A2	817119A4	153
REC78403A2	92497A3	153
REC78458A1	78458	300
REC78458A1	78458A1	297-300
REC78458A1		108-109
REC78984A08	78984A08	177
REC78984A08	78984A1	177
REC801766	801766	171
REC801767	801767	171-172
REC801768	801768	171
REC802630T01	802630	129
REC802630T01	802630001	129
REC802630T01	802630T	129
REC802630T01	802630T01	129
REC802630T01	8M0069803	129
REC802630T01		150

REF	OEM	
REC802632T	802632	130
REC802632T	802632T	130
REC802632T		150
REC803148	803148	144-149-150
REC803623001	803623001	160
REC803623001	811406	160
REC803623001	803623	160
REC804626R02	1347-6493A1	132
REC804626R02	1347-7363A1	132
REC804626R02	1347-7366A	132
REC804626R02	1347-804626R1	132
REC804626R02	1347-8288A1	132
REC804626R02	1347-8291A3	132
REC804626R02	804626R02	132
REC804626R02		140
REC805016A1	805016A1	142
REC805100	805100	283
REC805101T	805101T	283
REC805185A3	805185A3	176
REC805185A3	805185A37	174
REC805185A36	805185A36	174-176
REC805222A1	805222A1	173-176
REC805223T	805223	148
REC805223T	805223T	148
REC805223T		149-150
REC805227A1	805227A1	130-150
REC805298A1	805298A1	142
REC805298A1	85785-2	142
REC805298A1	85785T	142
REC805320A03	805320A03	108-109-146-293-298
REC805536A2	805536A2	259-269-271
REC805629A1	805629A1	221-250
REC805759Q01	43557	168
REC805759Q01	16457A4	168
REC805759Q01	43557A1	168
REC805759Q01	805759A1	168
REC805759Q01	805759A2	168
REC805759Q01	805759A5	168
REC805759Q01	805759Q01	168-174
REC805759Q01	805759T1	168
REC805759Q01	805759T2	168
REC805759Q01	90746A1	168
REC805884T	805884	153
REC805884T	805447T	153
REC805884T	805884T	153
REC806034A1	866200A01	293-298
REC806105Q1	806105Q1	284-285
REC806105Q1AL	806105Q1	109-284-285
REC806188Q01	806188	285
REC806188Q01AL	806188	285
REC806189Q1	806189Q1	284-285
REC806189Q1AL	806189Q1	109-284-285
REC806190Q1	806190Q1	284-285
REC806190Q1AL	806190Q1	284-285
REC806191T	806191T	307-308
REC806490T	36525	148
REC806490T	806490	148
REC806490T	811091	148
REC806490T	806490T	148
REC806490T	97-257	148
REC806490T	97257A1	148
REC806612T	806612T	145-149-150
REC806673T1	806673T	161
REC806673T1	806673T1	161
REC807166A1	807166A1	227-229-231-233-237-239-253
REC807166A3	14348A1	253
REC807166A3	807166A3	253
REC807252Q3	807252Q3	182
REC807252Q4	807252Q4	182
REC807252Q4	807252T4	182
REC807252Q5	807252Q5	182
REC807652T	807652	154
REC807652T	807652T	154
REC807653T	807653	154
REC807653T	807653T	154
REC807757T	807757T	193
REC807929A1	807929A1	273
REC807952A1	807952A1	129-149-150
REC807964A1	807964A1	173
REC807964A1	807964A1	176
REC807964A1	907964A1	176
REC808500	808500	129
REC809064	809064	138-140-141
REC809065	809065	138
REC809065	823728	138
REC809065	835076	138
REC809065		140
REC809066	809066	142
REC80W90U6		108-109
REC811534	811534	136-140-141-142
REC811536T	811536	136
REC811536T	811536T	136
REC811536T		140-141-142
REC814604T1	814604A1	275
REC814605	814605	275

REF	OEM	
REC814819A2	814819A2	259-269
REC814819A7	814819A7	271
REC815303T	815303T	297
REC815407A2	13753A2	168
REC815407A2	815407A2	168
REC815407A2	815407Q02	168-174
REC815471T1	815471T1	109-300
REC815919A1	815919A1	273
REC815935A7	815935A7	307
REC815954A7	815954A7	307
REC816431A1	816431A1	295
REC816431A1	816431A1	299
REC816431A1		108-109
REC816597A1	816597A1	273
REC816607	816607	295
REC816685	816685	295-302
REC8168112	8168112	259-269-271
REC817275Q05	817275Q05	109-191
REC8172761	8172761	273
REC817377	817377	173-176
REC817377	817377T	176
REC818349T1	818349T1	275
REC818349T1	818349T1	263-267
REC818763A10	818763A10	275
REC818763A10	818763A10	263-267
REC821526001	861526001	273
REC821629Q1	821629Q1	284-285
REC821629Q1AL	821629Q1	284-285
REC821630Q1	821630Q1	284-285
REC821630Q1AL	821630Q1	284-285
REC821631Q1	821631Q1	284-285
REC821631Q1AL	821631Q1	108-109-284-285
REC823426A1	823426A1	139-140-141-142
REC823427A1	1397-2067	137
REC823427A1	1397-2634	137
REC823427A1	1397-3459	137
REC823427A1	1397-7542	137
REC823427A1	1397-7547	137
REC823427A1	1397-8872	137
REC823427A1	1397-8873	137
REC823427A1	823427A1	137
REC823427A1		139-140-141
REC823727	823727	136-140-141
REC824326002		207-254
REC8245191	8245191	265-273
REC827682T	827682	126
REC827682T	827682T	126
REC828692A1	828692A1	269-271
REC828830A2	828830A2	275
REC829207	57-48120Q1	104-105-195-196-198
REC834975	392-6326	169
REC834975	392-6326T	169
REC834975	FI6900044	169
REC834975		171-172
REC835702	392-6318	168
REC835702	392-6318T	168
REC835702	FI6900184	168
REC84-817376T01	84-817376T01	173
REC84-819514T26		156
REC849899	849899	130-150
REC85060	85060	306-307-308
REC8507522	8507522	302
REC8507522	8507522 + 10-31700	292
REC852565	89-68258A4	157
REC852565	89-853654A1	157
REC853635	853635	271
REC853678T	853678	144
REC853678T	853678T	144
REC853678T		149-150
REC853998A1	853998	131
REC853998A1	851956A1	131
REC853998A1	853998A1	131
REC853998A1	853998T	131
REC853998A1		149
REC854445	854445	144-150
REC855314		157
REC855686		110
REC85784A1	85784A1	142
REC85785A2	85785A2	142
REC86-865202T	86-865202T	158
REC860235A03	806867A12	243
REC860235A03	806867A3	243
REC860235A03	860235A03	222-243-252
REC860349A1	860349A1	129-150
REC861126A1	861126A1	129-149-150
REC861155A3	861155A2	127
REC861155A3	861155A3	127
REC861155A6	805025A2	127
REC861155A6	805656A2	127
REC861155A6	805656A5	127
REC861155A6	805656A6	127
REC861155A6	861155A5	127
REC861155A6	861155A6	127
REC861156A03	861156A03	129
REC861156A04	861156A04	129

REF	OEM	
REC861156A1	861156A1	126
REC861249A1	861249	144
REC861249A1	861249A1	144
REC861249A1		149-150
REC861259	861259	142
REC861523A9	861523A9	303
REC861578	861578	292
REC861579	861579	186
REC861579	861579	192
REC861579	807731T	186
REC861677T	818383T	124
REC861677T	861677T	124
REC861677T		126
REC862030T01	862030T	154
REC862030T01	862030T01	154
REC862031T1	862031	153
REC862031T1	862031T	153
REC862031T1	862031T1	153
REC862048A1	97399	124
REC862048A1	812454A1	124
REC862048A1	812454A3	124
REC862048A1	862048A1	124
REC862048A1	97399A2	124
REC862048A1		125-126
REC862077A1	41141A2	124
REC862077A1	862077A1	124
REC862077A1		125
REC862132T	862132T	277
REC862209	862209	297
REC862210A01	22-862210A01	227
REC862210A01	22-862210A01	229
REC862210A01	22-862210A01	230
REC862210A01	22-862210A01	237
REC862210A01	22-862210A01	239
REC86234A4	47585	124
REC86234A4	71327	124
REC86234A4	77594	124
REC86234A4	86234	124
REC86234A4	8623405	124
REC86234A4	86234A3	124
REC86234A4	86234A4	124
REC86234A4		125-126
REC862351T	862351T	187
REC86246T	71646	124
REC86246T	78485	124
REC86246T	86246	124
REC86246T	86246A1	124
REC86246T	86246T	124
REC86246T		125-126
REC86247T	46860	124
REC86247T	63196	124
REC86247T	78820	124
REC86247T	86247	124
REC86247T	86247A2	124
REC86247T	86247T	124
REC86247T		125-126
REC862548A1	865380A13	156
REC862998	862998	145-149-150-223
REC863077T	863077T	154
REC863077T	86307AR01	154
REC86310	16755Q1	277
REC863802T2	863802T2	179
REC864244A2	864244A2	277
REC864281A2	864281A01	270
REC864281A2	864281A2	269-271
REC864281A2	86481A2	271
REC864281A2	865491A01	271
REC864282T	864282T	271
REC864297T01	864297	146
REC864297T01	864297001	146
REC864297T01	864297T01	146
REC864493	864493	104-105-106-181
REC864572	864572	112
REC864572	35-864572	112
REC864572		106
REC864625T	864625T	194
REC865193	865193	194
REC865182Q01	865182	285
REC865182Q01AL	865182	285
REC865329A02	865329A02	292-304
REC865380A13	14336A20	155
REC865380A13	14336A8	155
REC865380A13	865380A13	155
REC865380A13	865380A25	155
REC865380A13	88183A12	155
REC865380A25	14336A9	155
REC865380A25	414336A6	155
REC865380A25	88183A12	155
REC865436A02	865436A02	292-300
REC865436A03		108-109-300
REC865437A02	865437A02	292-300
REC865496A02	865496A01	277
REC865496A02	865496A02	271
REC865503T	865503T	271
REC865876A01	865876A01	283
REC866169T01	866169A01	126
REC866169T01	866169T01	126

REF	OEM	
REC866169T01	866169Y01	128
REC866170A01	866170A01	127-128
REC86779A1	86779A1	277
REC86840A05	86840A05	297-299
REC86840A05	86840A3	299
REC86840A05	8M0062406	299
REC86840A05		108-109
REC87-18286A43	87-18286A43	160
REC87-19674A1	87-19674A1	160
REC87-805605A1	87-805605A1	147
REC87-808009A2	87-808009A2	292
REC87-808009A2	87-8M0052935	292
REC87-808009A2		292
REC87-814281A5	87-814281A5	292
REC87-858679T2	87-858679T2	160
REC87-859032T02	87-859032T02	160
REC87-864252	87-864252	147
REC87-864252A01	87-864252A01	147
REC87-892150Q02	87-892150Q02	174
REC87-91941A8	87-91941A8	160
REC87290A23	87290A26	177
REC87290A4	87290A4	178-179-180
REC87399A2	87399A2	306
REC87399A2	87399A2	308
REC87399A2		306-308
REC87399A3	87399A3	307
REC87580		276-277-299
REC876037	8M0032176	158
REC876037	8M0057697	158
REC879150054		107
REC879150150	849934	144
REC879150150	879150150	144
REC879150150		150
REC879172	879172	120
REC879172	896332162	120
REC879172		107
REC879172259	879172259	152
REC879172259	896332191	152
REC879194185	879194185	184
REC879194371	882481	152
REC879194371	879194371	152
REC879194401	46-879194401	185
REC879194401	8M0094406	185
REC879194401	8M6005225	185
REC879194401		187
REC879194T46	879194T46	302
REC88-79023T10	88-79023T10	158
REC88035	88035	306
REC881693002	881693002	130-150
REC881879T11	859210	147
REC881879T11	881879011	147
REC881879T11	859210T	147
REC881879T11	859604A1	147
REC881879T11	881879A6	147
REC881879T11	881879T11	147
REC882376	882376	116
REC88243A3	88243A3	279
REC88243A3	88243A3	281
REC88243A3	88243A3	283
REC882571	882571	154
REC882571	8M0084523	154
REC882687	882687	122
REC882687	35-8M0150917	122
REC882751A04	821509	158
REC882751A04	821509T01	158
REC882751A04	882751A04	158
REC883166A2	883166A2	156
REC885174	885174	130-149-150
REC885176	885176	130-149-150
REC889419	889419	117
REC889422	889422	117
REC89-818997A1	89-818997A1	157
REC89-818997A1	89-818997T1	157
REC89-818999A2	89-805188A1	157
REC89-818999A2	89-818999A1	157
REC89-818999A2	89-818999A2	157
REC89-96054T	89-91975	157
REC89-96054T	89-96054	157
REC89-96054T	89-96054T	157
REC89-96158T	89-818864	157
REC89-96158T	89-818864T	157
REC89-96158T	89-96158	157
REC89-96158T	89-96158T	157
REC891736T	17649	156
REC891736T	17649T	156
REC891736T	891736T	156
REC89260		254
REC892615002	892615	146
REC892615002	892615001	146
REC892615002	892615002	146
REC892617	892617	146
REC892681	892681	128
REC892681	892681	130
REC892681		150
REC895207	895207	107-122-184
REC896332057	896332057	193
REC89690T	89690T	184
REC898101505	898101505	153

REF	OEM	
REC898253013	884790	169
REC898253013	898253013	169
REC898253013	8M6001222	169-175
REC898253013		169
REC89825302	898253029	169
REC89825302	391-5088	169
REC89825302	391-7057	169
REC89825302	391-7057T	169
REC89825302	8M6001224	169
REC89825302	FI6901224	169
REC89825302		171-172
REC898253T22	884792	169
REC898253T22	898253T22	169-175
REC898253T23	888731	169
REC898253T23	898253T23	169-175
REC8M0032834	28-8M0032834	261
REC8M0032834	8M0032834	265
REC8M0042641	12-8M0042641	261
REC8M0042641	8M0042641	265
REC8M0047215	864650A05	128
REC8M0047215	864650A13	128
REC8M0047215	8M0047215	128
REC8M0047215		129
REC8M0052939	814281A7	292
REC8M0052939	889514A01	292
REC8M0052939	8M0052939	292
REC8M0052939		292-194
REC8M0054726	881731	144
REC8M0054726	8M0054726	144-150
REC8M0058164	97401	125
REC8M0058164	8M0058164	125
REC8M0058164		125-126
REC8M0061068	47442A1	180
REC8M0061381	860256A4	178
REC8M0061381	861006A1	178
REC8M0061381	8M0061381	178
REC8M0062102	32-8M0062102	198
REC8M0062102	32-8M0062102	296
REC8M0062770	8M0062770	126
REC8M0062770	8M0062770	128
REC8M0064021	834832	154
REC8M0064021	834832T2	154
REC8M0064021	857006A3	154
REC8M0068784	34623	147
REC8M0068784	90806	147
REC8M0068784	815425	147
REC8M0068784	87-815425T	147
REC8M0068784	8M0068784	147
REC8M0073435	842725A3	125
REC8M0073435	861676A1	125
REC8M0073435	861676T09	125
REC8M0073435	8M0073435	125
REC8M0073435		125
REC8M0077616	805544T	145
REC8M0077616	8M0077616	145
REC8M0077616		150
REC8M0080805	8M0080805	291-296-306-307-308
REC8M0080805		290-296-306-307-308
REC8M0082988	828358	146
REC8M0082988	8283582	146
REC8M0082988	8M0030022	146
REC8M0082988	8M0082988	146
REC8M0087834	885165	144
REC8M0087834	8M0087834	144
REC8M0089715	807252T1	182
REC8M0089715	8M0089715	182
REC8M0089715		104-105-106
REC8M0091470	807252T2	182
REC8M0091470	8M0091470	182
REC8M0091470		104-105-106
REC8M0092849	8M0092489	160
REC8M0093480	8M0066646	181
REC8M0093480	8M0067292	181
REC8M0093480	8M0093480	181
REC8M0093480		107
REC8M0093561	879194215	181
REC8M0093561	879194231	181
REC8M0093561	879194233	181
REC8M0093561	896332148	181
REC8M0093561	8M0093561	181
REC8M0093561		107
REC8M0095310	8M0095310	146
REC8M0095310	8M0095310	293
REC8M0095310	8M0095310	298
REC8M0095953	8M0095953	231
REC8M0098619	889341	143
REC8M0098619	8M0098619	143
REC8M0103289	8M0062771	127-128
REC8M0111642	898101425	193
REC8M0111642	8M0111642	193
REC8M0113182	8183812	194
REC8M0125617	805226A1	144
REC8M0125617	881070T	144
REC8M0125617	8M0125617	144
REC8M0125617		149-150-223
REC8M0133370	8M0057679	129
REC8M0133370	8M0133370	129

REF	OEM	
REC8M0133370		128
REC8M0142542	8M0142542	148
REC8M0142695	8M0095468	145-231
REC8M0142695	8M0142695	145
REC8M0144930	8M0144930	160
REC8M0148530	8M0148530	186
REC8M0148668	885342001	148
REC8M0148668	885342002	148-231-234
REC8M0148668	8M0148668	148-223
REC8M0153706	807729T	193
REC8M0153706	8M0153706	193
REC8M0155633	897345016	186
REC8M0155633	8M0129714	186
REC8M0155633	8M0155633	186
REC8M2003959	8M2003959	145
REC8M2003959	8M2003959	231-234
REC8M2003959		223
REC8M2004414	8M2004414	231-234-251
REC8M2011027	79448	281
REC8M2011027	8M2011027	263-267-275-279
REC8M2015937	8M2015937	269-271
REC8M2015938	8M2015938	269-271
REC8M6000623	8818793	148
REC8M6000623	881879010	148
REC8M6000623	8M6000623	148
REC8M6000634	889659002	147
REC8M6000634	897447002	147
REC8M6000634	8M6000634	147
REC8M6001217	391-5092	170
REC8M6001217	391-5093	170
REC8M6001217	391-898253001	170
REC8M6001217	8M6001217	170
REC8M6001217	FI6900040	170
REC8M6001217		171-172
REC8M6001219	392-6325	170
REC8M6001219	392-898253005	170
REC8M6001219	8M6001219	170
REC8M6001219	FI6900031	170
REC8M6001219		171-172
REC8M6001249	392-6324	170
REC8M6001249	392-898223002	170
REC8M6001249	8M6001249	170
REC8M6001249	FI69000083	170
REC8M6001249	FI6900023	170
REC8M6001249	FI6900032	170
REC8M6001249	FI6900189	170
REC8M6001249		171-172
REC8M6001252	898253009	169
REC8M6001252	8M6001252	169
REC8M6002274		107
REC8M6002428	8M0057686	130
REC8M6002428	8M6000652	130
REC8M6002428	8M6002428	130
REC8M6003194	878187	145
REC8M6003194	8M6003194	145
REC8M6500024	865598	194
REC8M6500024	8M6500024	193
REC9-33301	885176	131-149-150
REC9-33302	861260	131
REC9-33302	861260T	131
REC9-33302		149-150
REC9-33303	805225A1	131-149-150
REC9-33304	849896	131
REC9-33304	802632T	131-150
REC90095		310
REC90301-ZW1-003	11-827614	263-267-275-279
REC90490	91-17257T	314
REC90490	91-8053741	314
REC90508-ZW1-003	14-816629Q	267-275-279
REC90508-ZW1-003	816629Q	263
REC90736A24	90736A24	177
REC908855	26-20070	216
REC909140	25-58390	215
REC91-00001		310
REC91-00002		310
REC91-12037	91-12037	313
REC91-17256	91-17256	314
REC91-25034		292-311
REC91-31107T	91-17275A1	313
REC91-31229		313
REC91-34569A1		310
REC91-36569T	91-36569T	310
REC91-37241		310
REC91-43506T		311
REC91-43579	91-43579	313
REC91-45497A1	91-45497A1	312
REC91-56048001	91-56048001	312
REC91-56775T	91-56775T	312
REC91-60523	91-60523	312
REC91-60526T	91-60526T	312
REC91-61067A04		311
REC91-61069T		311
REC91-61077T	91-61077T	312
REC91-78310	91-78310	312
REC91-805475A1	91-805475A1	312
REC91-818162	91-818162	312

REF	OEM	
REC91-859046Q3		311
REC91-859046Q4		311
REC91-888863	91-888863	173
REC93320A15	93320A10	237-248
REC93320A15	93320A15	248
REC93320A15		237
REC934231	934231	263-267
REC934241	934241	263-267
REC93568	35-93568	113
REC94286T1	94286	285
REC94286T1AL	94286	285
REC94576	94576	192
REC94916	94916	192
REC94998A4	94998A4	259
REC966900	57-77274	195-198
REC966903	57-74271Q	195-196-198
REC966931	57-13458Q	196-198
REC96705A1	96705A1	219-242-248-250-252
REC97258A1	34625	148
REC97258A1	97258	148
REC97258A1	97258A1	148
REC97258A1	FI6900152	148
REC97258A1	FI6900198	148
REC97432A2	97432A2	217-303
REC98-8M0121940	98-8M0121940	191
REC982209	391-5075	168
REC982209	391-5075Q1	168
REC982209	F16900148	168
REC98230A1	98230A1	293-298
REC98504A3	98504A3	227-234-239-251-267
REC985218		168
REC98703A26	98703A26	308
REC98703A3	98703A3	306
REC98704A26	98704A26	308
REC98704A3	98704A3	306
REC99155T2	99155T2	105-106-182-224
REC99356A2	99356A2	184-253
RECEFP-KT		127
RECGREU1		109
RECGS00530		119-120
RECGS01030	35-8M0067597	107-119-120
RECHOL17-6		135
RECHOL717-7		135
RECK309		228-229-233
RECK591		228-229-233
RECK6325		220
RECK8503		226-227-236-237-238-239
RECKITMALPHA1AL	888756Q04	108-258-259-263-267-284-286
RECKITMALPHA1M	888756Q04	284-286
RECKITMALPHA1ZN	888756Q04	284-286
RECKITMALPHA2AL	888756Q03	108-109-269-271-275-284-286
RECKITMALPHA2M	888756Q03	284-286
RECKITMALPHA2ZN	888756Q03	284-286
RECKITMBRAVO1AL		109
RECKITMBRAVO1AL	888758Q02	276-277-279-284-286
RECKITMBRAVO1M	888758Q02	284-286
RECKITMBRAVO1ZN	888758Q02	284-286
RECKITMBRAVO23AL	888761Q03	109-281-284-286
RECKITMBRAVO23M	888761Q03	284-286
RECKITMBRAVO23ZN	888761Q03	284-286
RECKITMBRAVO3AL	888761Q04	108-109-283-284-286
RECKITMBRAVO3M	888761Q04	284-286
RECKITMBRAVO3ZN	888761Q04	284-286
RECMC00001		189
RECMC00002		189
RECMC00004	47-89984Q5	190
RECOBBRACKET		110
RECPG260		151
RECPIN4		310
RECPIN4.5		310
RECPIN6		310
RECRK21069		123
RECSWK-2000/10		119
RECSWK-2000/5		119
RECTOOLTRIM1		310
RECTOOLTRIM2		310
RECTOOLTRIM3		310
RECTOOLTRIMKIT		310
RM10-25299	10-824941	219-221-225-235
RM10-28635	10-28635	293-298
RM10-807204	10-807204	293-298
RM11-49910	11-49910	292
RM11-92004	11-92004	277
RM12-41721	12-41721	293-298
RM12-98548	12-98548	293-298
RM14801A1	14801A1	233-237-249
RM1656-8866A17	8866A64	279
RM19543A10	865436A02	292-300
RM21325765	864148	143

REF	OEM	
RM21325765	801331174	143
RM21325765	801763272	143
RM21325765	54-896332164	143
RM21325765	864148A01	143
RM21325765		143
RM22-43828	22-43828T	296
RM22-49718	22-49718	305
RM22-861163	22-861163	185-295-297
RM23-815921A17	23-815921A17	272-273
RM23-816599	23-816599	291
RM23-847638	23-847638	298
RM23-87560091	23-87560091	277
RM23-87560094	23-87560094	277
RM23-87560097	23-87560097	277
RM23-98356	23-98356	291-296
RM23-983571	23-983571	291-296
RM23-99352	23-99352	293-298
RM26-879194364		216
RM27-864549A02	27-864549A02	252
RM31-86763A04	31-86763A04	277
RM32-805375	32-805375	199-202
RM32-806209-1	32-806209-1	199
RM32-860144	32-860144	200-201
RM32-860331	32-860331	200
RM32-861057	32-861057	200
RM35-802893Q		110
RM35-863829	35-863829	113
RM35-866340Q02	35-866340Q03	114
RM35-866594Q01	35-866594K01	110
RM35-866594Q01	35-866594Q01	110
RM35-866594Q01		104
RM35-883702Q	35-883702Q	114
RM35-8M2001030	35-8M2001030	113
RM41646A9	41646A9	297
RM42260A6	42260A6	291
RM42815A6	42815A6	295
RM43-14063A1	43-14063A1	279-281
RM43-66773A3	43-66773A3	259
RM43-887903A1	43-887903A1	277
RM43-887906A1	43-887906A1	277
RM43-887909A1	43-887909A1	277
RM43881A14	8M0062568	291
RM43881A17	43881A17	296
RM44-41630T	44-41630T	279-281
RM44-41630T	44-850308	279
RM44-865322T	44-865322T	283
RM44181A1	44181A1	217
RM44182A1	44182A1	217
RM45-41629A2	41629A2	279
RM45-41629A2	45-41629A2	281
RM45-41629A2	805370A1	283
RM45-812773T	45-812773	277
RM46-807151A8	46-72774A69	185
RM46-807151A8	46-807151A8	185
RM52-865344A01	52-865344A01	277
RM53-87843	53-87843	185-294-295-297
RM54-12078	54-12078	293-298
RM57-862054Q		104-195
RM57410	57410	283
RM805182A1	805182A1	283
RM805322	805322	283
RM806031A2	806031A2	295
RM806034A2	806034A2	293-298
RM806193A48	19742A1	185
RM806193A48	19742A3	185
RM806193A48	806193A20	185
RM806193A48	806193A38	185
RM806193A48	806193A48	185
RM807130A4	44266T	250
RM807130A4	44266T1	250
RM807130A4	807130A4	227-229-233-237-239-250
RM807130A4	8M0115149	231-250
RM807371T1	807371T1	184
RM815932	815932	269-271
RM817275A1	817275A1	273
RM863444T1	863444T1	179
RM863457A2	863457A2	178
RM863631T1	863631T1	179
RM864363A1	864363A1	292
RM864364A1	864364A1	292
RM865328A01	865328A01	293
RM865425A03	865425A03	277
RM865470	865470	296
RM866136A01	866136A01	277
RM866322A01	866322A01	293-298
RM86739	86739	283
RM86739	14-86739	279-281
RM86754T	86754T	283
RM88-79023A91	88-79023A91	158
RM8M0052936	87-808009A1	292
RM8M0052936	87-808009A3	292
RM8M0052936	87-8M0052936	292
RM8M0052936		292
RM8M0062440	8M0062440	298
RM91-17273	91-17273	313
RM91-17275A1	91-17275A1	313

REF	OEM	
RM91-17302	91-17302	313
RM91-31229A7		311
RM94989A6	94989A6	291
RM97351	97351	277
RM99356A1	99356A1	184
RM99438A1	99438A1	183
S		
SED3092000	805602A1	247
SED3092600	807988A03	239-247
SED3092600	807988A3	227
SED3092600		237
SED3092610	12076A2	247
SED3092610	12076A2	221-222
SED3093300	805602A2	247
SED3093301	80176320	247
SED3095400	864309T02	229-233-247
SED3095500	807988A03	247
SED3095500	864591T02	229-233
SHE10615K	47-879312025	107-186-188
SHE15000K	3349198	188
SHE15000K	3916720	188
SHE15000K	47-853126	188
SHE15000K	8M0056956	188
SHE15000K		107-186
SHE15979	47-808145T	186-191
SHE26000K	3972366	186-188
SHEG151	805835	186
SHEG155	806152	186
SHEG2603X		186
SHEP1016	854179001	186
SHEP1016	879312023	186
SHEP1016	8M0148530	186
SOL1511-142-23	48-78126A45	316
SOL1511-143-21	48-832834A45	316
SOL1511-145-19	48-832832A45	316
SOL1511-148-17	48-832830A45	316
SOL1511-150-15	48-832828A45	316
SOL1511-153-19	48-13700A46	316
SOL1511-153-21	48-13702A46	316
SOL1511-153-23	48-13704A46	316
SOL1511-155-17	48-18278A46	316
SOL1511-158-15	48-19838A46	316
SOL1511-160-13	48-78114A45	316
SOL1511-160-13	48-826072A46	316
SOL1512-153-19	48-13701A46	316
SOL1512-153-21	48-13703A46	316
SOL1512-155-17	48-90159A46	316
SOL1512-158-15	48-19841A46	316
SOL1513-140-21	48-832832A45	316
SOL1513-140-21	48-834854A45	316
SOL1513-140-23	48-832834A45	316
SOL1513-143-19	48-832830A45	316
SOL1513-143-19	48-834852A45	316
SOL1513-145-17	48-831850A45	316
SOL1513-145-17	48-832828A45	316
SOL1513-148-15	48-78116A4	316
SOL1514-140-21	48-834855A45	316
SOL1514-143-19	48-834853A45	316
SOL1514-145-17	48-834851A45	316
SOL1531-140-19	48-16316A46	316
SOL1531-140-19	48-832830A45	316
SOL1531-140-21	48-16318A46	316
SOL1531-140-21	48-832832A45	316
SOL1531-140-23	48-16320A46	316
SOL1531-140-23	48-832834A45	316
SOL1531-140-25	48-16322A46	316
SOL1531-140-25	48-78126A45	316
SOL1531-143-17	48-16314A46	316
SOL1531-143-17	48-832828A45	316
SOL1531-145-15	48-16312A46	316
SOL1531-145-15	48-78116A4	316
SOL1531-156-13	48-78114A45	316
SOL1532-140-19	48-16317A46	316
SOL1532-140-21	48-16319A46	316
SOL1532-140-23	48-16321A46	316
SOL1532-143-17	48-16315A46	316
SOL1551-140-24	48-16322A46	316
SOL1551-140-24	48-16550A46	316
SOL1551-143-22	48-16320A46	316
SOL1551-143-22	48-16548A46	316
SOL1551-145-21	48-16546A46	316
SOL1551-148-16	48-16314A46	316
SOL1551-148-18	48-16316A46	316
SOL1551-148-19	48-16544A46	316
SOL1551-148-20	48-16318A46	316
SOL1552-140-24	48-16549A46	316
SOL1552-143-22	48-16321A46	316
SOL1552-143-22	48-16547A46	316
SOL1552-145-21	48-16545A46	316
SOL1552-148-16	48-16315A46	316
SOL1552-148-18	48-16317A46	316
SOL1552-148-19	48-16543A46	316
SOL1552-148-20	48-16319A46	316
SOL1571-145-25	48-13706A46	316
SOL1571-148-23	48-13704A46	316
SOL1571-150-21	48-13702A46	316
SOL1571-153-19	48-13700A46	316

REF	OEM	
SOL1571-155-17	48-18278A46	316
SOL1572-145-25	48-13707A46	316
SOL1572-148-23	48-13705A46	316
SOL1572-150-21	48-13703A46	316
SOL1572-153-19	48-13701A46	316
SOL1572-155-17	48-90159A46	316
SOL1611-178-21	48-18616A40	316
SOL1611-178-21	48-18616A6	316
SOL1611-183-19	48-18614A40	316
SOL1611-183-19	48-18614A6	316
SOL1611-188-17	48-18612A40	316
SOL1611-188-17	48-18612A6	316
SOL1611-193-15	48-18610A40	316
SOL1611-193-15	48-18610A6	316
SOL1612-178-21	48-18617A40	316
SOL1612-178-21	48-18617A6	316
SOL1612-183-19	48-18615A40	316
SOL1612-183-19	48-18615A6	316
SOL1612-188-17	48-18613A40	316
SOL1612-188-17	48-18613A6	316
SOL1612-193-15	48-18611A40	316
SOL1612-193-15	48-18611A6	316
SOL1641-173-25	48-18620A6	316
SOL1641-175-23	48-18618A40	316
SOL1641-175-23	48-18618A6	316
SOL1641-175-23	48-18620A40	316
SOL1641-178-21	48-18616A40	316
SOL1641-178-21	48-18616A6	316
SOL1641-183-19	48-18614A40	316
SOL1641-183-19	48-18614A6	316
SOL1641-188-17	48-18612A40	316
SOL1641-188-17	48-18612A6	316
SOL1641-193-15	48-18610A40	316
SOL1641-193-15	48-18610A6	316
SOL1642-173-25	48-18621A40	316
SOL1642-173-25	48-18621A6	316
SOL1642-175-23	48-18619A40	316
SOL1642-175-23	48-18619A6	316
SOL1642-178-21	48-18617A40	316
SOL1642-178-21	48-18617A6	316
SOL1642-183-19	48-18615A40	316
SOL1642-183-19	48-18615A6	316
SOL1642-188-17	48-18613A40	316
SOL1642-188-17	48-18613A6	316
SOL1642-193-15	48-18611A40	316
SOL1642-193-15	48-18611A6	316
SOL1651-138-28		317
SOL1651-140-24		317
SOL1651-140-25		317
SOL1651-140-26		317
SOL1651-140-27		317
SOL1651-143-22		317
SOL1651-143-23		317
SOL1651-144-20		317
SOL1651-144-21		317
SOL1654-150-28		317
SOL1654-155-24		317
SOL1654-155-25		317
SOL1654-155-26		317
SOL1654-155-27		317
SOL1654-158-22		317
SOL1654-158-23		317
SOL1654-160-20		317
SOL1654-160-21		317
SOL9511-143-21		317
SOL9511-145-19		317
SOL9511-148-17		317
SOL9511-150-15		317
SOL9511-153-13		317
SOL9512-143-21		317
SOL9512-145-19		317
SOL9512-148-17		317
SOL9512-150-15		317
SOL9513-140-21		317
SOL9513-143-19		317
SOL9513-145-17		317
SOL9513-148-15		317
SOL9531-140-19		317
SOL9531-140-21		317
SOL9531-140-23		317
SOL9531-143-17		317
SOL9531-145-15		317
SOL9532-140-19		317
SOL9532-140-21		317
SOL9532-140-23		317
SOL9532-143-17		317
SOL9532-145-15		317
SOL9571-145-25		317
SOL9571-148-23		317
SOL9571-150-21		317
SOL9571-153-19		317
SOL9571-155-17		317
SOL9571-158-15		317
SOL9572-145-25		317
SOL9572-148-23		317
SOL9572-150-21		317
SOL9572-153-19		317
SOL9572-155-17		317

REF	OEM	
SOL9572-158-15		317
SOLRBX-102		317
T		
TEN00800	1301339	286
TEN00806BIS	821521	286
TEN00807	55989	286
TEN00814	821629	286
TEN00815	821630	286
TEN00817	806189	287
TEN00818	806190	287
TEN00819	806105	287
TEN00820	76214-5	286
TEN00823	823912	286
TEN00824	823913	286
TEN00827	17264	286
TEN00839	853762	287
TEN01320T	811487	287
TEN01320T	879194217	287
TEN01320T	8M0067062	287
TEN01320T	8M0067625	287
TEN01320T	8M0150234	287
TEN01320T	97-8M0151541	287
TEN01320T		107-183
TEN02040		287
TEN02041		287
TEN02042		287
TEN02043		287
TEN02043T		287
TEN02044		287
TEN02044T		287
TEN02044TP		287
TENKITALPHAONE/1	8887562Q02	263-267-287
TENKITALPHAONE/2	888756Q01	287
TENKITALPHAONE/2	888756Q03	287
TENKITALPHAONE/2		269-171-175
TENKITBRAVOI	888758Q01	279-287
TENKITBRAVOII-III	888761Q01	281-287
TENKITBRAVOIII-04	888761Q02	283-287
TRANSONALPHA2G	6-6111002LP	291
TRANSONALPHAI	6-6010000CP	291
TRANSONBRAVO	6-6211002NZ	298
TRANSONBRAVO	6-6311002NZ	298

OEM --> REF

OEM	REF	PAG.
6325	REC33662	170
12449	REC3860769	153
12708	REC12708	277
12711	REC12711	277-302
12784	REC12784	277
13037	REC13037	157
13171	REC12-835467Q01	281
13220	REC13220	138
15995	REC15995	148-224
17264	TEN00827	286
17649	REC891736T	156
19685	REC3860769	153
25661	REC378444	157
32734	CEF500512K	300
32734	REC18654A1	300
33266	REC195141	176
33662	REC33662	170
33700	REC33700	170
33706	REC33706	170
33708	REC33708	168
33765	REC33765T	168
33863	MP514693	193
34127	REC34127T2	285
34127	REC34127T2AL	285
34235	REC34235T	170
34623	REC8M0068784	147
34625	REC97258A1	148
35852	GS38122	303
35915	REC35915	263
35983	REC35983	259
35983	REC35983	269
35983	REC35983	271
36223	CEF500522K	299
36223	REC36223A2	299
36525	REC806490T	148
38547	REC1463-9382	162
39916	BAMC47-27-39923	250
39920	BAMC-20-55538	245
41471	PAGB/T93-10	231
41802	REC41802	227
41802	REC41802	229
41802	REC41802	233
41802	REC41802	237
41802	REC41802	239
41802	REC41802	291
41802	REC41802	296
42785	REC42785	155
43436	REC43436	292-303
43557	REC805759Q01	168
43713	REC43713	291-296
43994	REC43994A2	285
43994	REC43994A2AL	285
46335	REC46335	219-221-222-224-225-227-235-237-239
46399	REC46399	285
46399	REC46399AL	285
46860	REC86247T	124
47585	REC86234A4	124
47587	BAMC29-47587	177
47735	BAMC1-47735	244
47736	BAMC1-47736	244
47820	REC47820A1	285
47820	REC47820A1AL	285
48952	REC48952	148
52352	REC195141	176
53051	REC27-53045Q01	181
53114	CEF500524	253
53114	REC53114A1	253
54552	REC62092T	124
55989	TEN00807	286
56045	REC69729	153
56153	REC3853847	217
57410	RM57410	283
58033	REC58033	170
58034	REC64851	170
58217	REC58217	169
58231	REC195141	176
59498	BAMC29-59498	180
59503	REC59503	191
59755	REC69729	153
59974	MP425113	254
60207	REC60207	235-241
60565	REC35-06007	114
60930	REC60930	253
62092	REC62092T	124
62424	REC195141	176
62898	BAMC29-62898	180
63196	REC86247T	124
64850	REC71831	170
65864	REC65864	169
69729	REC69729	153
70125	REC70125A02	142
71327	REC86234A4	124
71464	REC71464A01	142
71646	REC86246T	124
72608	MP425149	254
72625	REC71464A01	142
73379	REC22-73379	231-234
75416	FEDV-3929	217
75832	REC3850812	277
76214	REC7614T1	285
76214	REC7614T1AL	285
76214-4	REC762144	285
76214-4	REC762144AL	285
76865	REC76865	263-267-275
77123	REC77123	293
77594	REC86234A4	124
78016	REC65864	169
78402	REC78403A2	153
78458	CEF500520K	300
78458	REC78458A1	300
78485	REC86246T	124
78820	REC86247T	124
79448	REC8M2011027	281
85060	REC85060	306-307-308
85538	CMX-1	288
85538	CMX-1A	288
86234	REC86234A4	124
86246	REC86246T	124
86247	REC86247T	124
86739	RM86739	283
87581	REC195141	176
88035	REC88035	306
90806	REC8M0068784	147
92916	REC23-8M8000506	281
94286	REC94286T1	285
94286	REC94286T1AL	285
94576	REC94576	192
94916	REC94916	192
97258	REC97258A1	148
97351	RM97351	277
97399	REC862048A1	124
97401	REC8M0058164	125
98555	REC3860769	153
98794	REC10-98794	231
99757	REC27-99757	231
195141	REC195141	176
324351	REC324351	261-265
393831	REC393831	269
393831	REC393831	271
393831	REC393831	277
428611	REC22-428611	231-234
479452	PAF15-07010004	229
621041	REC621041	259-295-302
668631	REC10-668631	231-234
681001	REC681001	267-275
774811	REC774811	261-265
801766	REC801766	171
801767	REC801767	171
801768	REC801768	171
802464	REC3854003	162
802630	REC802630T01	129
802632	REC802632T	130
803148	REC803148	144-149-150
803149	REC3843751	145-149-150
803623	REC803623001	160
804412	REC3854003	162
804418	REC3854548	168
804424	REC3854311	169
805100	REC805100	283
805218	REC3850397	148
805223	REC805223T	148
805322	RM805322	283
805835	SHEG151	186
805884	REC805884T	153
806105	TEN00819	287
806152	SHEG155	186
806188	REC806188Q01	285
806188	REC806188Q01AL	285
806189	TEN00817	287
806190	TEN00818	287
806490	REC806490T	148
807652	REC807652T	154
807653	REC807653T	154
808483	REC3854548	168
808484	REC3854549	169
808500	REC808500	129
808504	REC65L-13915-00	113
809064	REC809064	138-140-141
809065	REC809065	138
809066	REC809066	142
811091	REC806490T	148
811406	REC803623001	160
811461	REC25-811461	143
811487	TEN01320T	287
811534	REC811534	136-140-141-142
811536	REC811536T	136
811575	MP425113	254
811636	REC3854261	169
811637	REC3854003	162
811639	REC3854001	145
814605	REC814605	275
815425	REC8M0068784	147
815932	RM815932	269-271
816607	REC816607	295
816685	REC816685	295-302
817119	REC3860769	153
817377	REC817377	173-176
817378	REC3854003	161
821509	REC882751A04	158
821521	TEN00806BIS	286
821629	TEN00814	286
821630	TEN00815	286
823341	CMX-1	288
823341	CMX-1A	288
823727	REC823727	136-140-141
823728	REC809065	138
823912	TEN00823	286
823913	TEN00824	286
824324	MP425024	254
824330	MP425036	254
827682	REC827682T	126
828151	REC3854138	158
828358	REC8M0082988	146
834832	REC8M0064021	154
835076	REC809065	138
849896	REC9-33304	131
849899	REC849899	130-150
849934	REC879150150	144
850484	REC3854331	168
850485	REC3854311	169
850485	REC3854311	173
850487	REC3854003	162
853635	REC853635	271
853678	REC853678T	144
853762	TEN00839	287
853998	REC853998A1	131
854445	REC854445	144-150
859135	REC11-859135	194-269
859210	REC881879T11	147
860231	REC27-8637251	251
861249	REC861249A1	144
861259	REC861259	142
861260	REC9-33302	131
861578	REC861578	292
861579	REC861579	186
861579	REC861579	192
862031	REC862031T1	153
862209	REC862209	297
862646	BS5292	159
862647	BS5294	159
862998	REC862998	145
863725	REC27-8637251	251
864148	RM21325765	143
864297	REC864297T01	146
864493	REC864493	181
864572	REC864572	112
865182	REC865182Q01	285
865182	REC865182Q01AL	285
865193	REC865193	194
865470	RM865470	296
865598	REC8M6500024	194
866725	REC22-866725	231-234
878187	REC8M6003194	145
879172	REC879172	120
881731	REC8M0054726	144
882376	REC882376	116
882481	REC879194371	152

OEM	REF	PAG.
882571	REC882571	154
882687	REC882687	122
882751	REC3854138	158
883885	REC3853796	186-187
883925	REC46-8M0113736	185
884727	REC46-8M0113733	185
884790	REC898253013	169
884792	REC898253T22	169
885165	REC8M0087834	144
885174	REC885174	130-149-150
885176	REC885176	130-149-150
885176	REC9-33301	131-149-150
888731	REC898253T23	169
889333	BAMC29-63588	178
889341	REC8M0098619	143
889419	REC889419	117
889422	REC889422	117
892615	REC892615002	146
892617	REC892617	146
892665	REC35-892665	128
892681	REC892681	128
892681	REC892681	130
892683	REC26-892683	128
895207	REC895207	107-122-184
898141	REC3863130	146-175
934231	REC934231	263-267
934241	REC934241	263-267
1301339	TEN00800	286
2495186	REC46-48748T1	189
2763441	REC46-48748T1	189
3349198	CEF500167	188
3349198	REC15000K	188
3349198	SHE15000K	188
3581760	REC3581760	117
3854260	REC3854260	173
3854331	REC3854331	173
3854548	REC3854548	173
3916720	CEF500167	188
3916720	REC15000K	188
3916720	SHE15000K	188
3938311	REC393831	259
3972366	CEF500183G	188
3972366	SHE26000K	186-188
8079821	REC27-8079821	137
8084841	REC3854549	169
8085041	REC65L-13915-00	113
8116361	REC3854261	169
8168112	REC8168112	259-269-271
8172761	REC8172761	273
8183812	REC8M0113182	194
8245191	REC8245191	265-273
8283582	REC8M0082988	146
8503991	REC46-8M0113734	185
8504541	REC46-8M0113735	185
8504851	REC3854311	169
8507522	REC8507522	302
8623405	REC86234A4	124
8733261	REC13037	157
8818793	REC8M6000623	148
14358001	REC32-14358001	231
44348001	REC32-44348001	231
80176320	SED3093301	247
81637002	REC3854003	162
82671013	REC11-862903	305
801331174	RM21325765	143
801763272	RM21325765	143
802630001	REC802630T01	129
803623001	REC803623001	160
811637001	REC3854003	162
811637001	REC3854003	173
815504272	GS38320	231
854179001	SHEP1016	186
861526001	REC821526001	273
864297001	REC864297T01	146
879150150	REC879150150	144
879172105	REC3843100	147
879172259	REC879172259	152
879194185	REC879194185	184
879194215	REC8M0093561	181
879194217	TEN01320T	287
879194231	REC8M0093561	181
879194233	REC8M0093561	181
879194241	REC016940	121
879194363	REC21124849	146
879194371	REC879194371	152
879312023	SHEP1016	186

OEM	REF	PAG.
881693002	REC881693002	130-150
881879010	REC8M6000623	148
881879011	REC881879T11	147
885342001	REC8M0148668	148
885342002	REC8M0148668	148-231-234
889659002	REC8M6000634	147
892615001	REC892615002	146
892615002	REC892615002	146
896332057	REC896332057	193
896332148	REC8M0093561	181
896332162	REC879172	120
896332191	REC879172259	152
897345016	REC8M0155633	186
897447002	REC8M6000634	147
898101425	REC8M0111642	193
898101505	REC898101505	153
898253003	REC33662	170
898253005	REC33662	170
898253007	REC58033	170
898253008	REC58217	169
898253009	REC8M6001252	169
898253010	REC3854549	169
898253011	REC3854261	169
898253012	REC3854311	169
898253013	REC898253013	169
898253029	REC89825302	169
10-20518	REC10-20518	292-303
10-28635	RM10-28635	293-298
10-28636	REC10-28668	291
10-28668	REC10-28668	259-271
10-28688	REC10-28668	269
10-30206	REC10-30206	263-267
10-31700	REC10-31700	292-302
10-32470	REC10-32470	263-267
10-34354	REC10-34354	221
10-35386	REC10-35386	219-235-240-241
10-37562	REC10-37562	225
10-37612	REC10-37612	239-240-241
10-43749	REC10-43749	227-229-233-237-239
10-45590	REC10-45590	295-302
10-53728	REC10-53728	221-222-227-229-233-237
10-668631	REC10-668631	221-222
10-72094	REC10-72094	221
10-73657	REC10-73657	224
10-74727	REC22-73379	224
10-76156	REC10-76156	263-267
10-79953Q04	REC10-79953Q04	259-269-271
10-806290	REC10-806290	307-308
10-806327	REC10-806327	275-279-281-283
10-807204	RM10-807204	293-298
10-812509184	MP0180-001	152
10-816601	REC10-816601	269-271-283
10-816928	REC10-816928	273-223
10-824941	RM10-25299	219-221-225-235
10-85486	REC10-85486	306-307-308
10-861788	REC10-861788	151-152
10-865321	REC313715	283
10-865982005	REC10-865982005	227-237-239
10-86801	REC10-86801	293-298
10-90926	REC10-90926	174
10-96411	REC10-96411	265
10-97934	REC10-97934	304
10-97934A1	REC10-97934A1	292-304
10-98794	REC10-98794	229-233-259-269-271
11-13436	REC11-13436	261-265
11-134371	REC11-862903	293-298
11-134391	REC11-34933	295
11-22339	REC11-22339	259-269-271-277
11-34933	REC11-34933	291-296
11-35921	REC11-35921	263-267-275
11-46335	REC46335	240-241
11-49910	RM11-49910	292
11-52707Q1	REC11-52707Q1	263-267-275-279
11-8267089	REC11-8267089	261-265-296
11-827614	REC90301-ZW1-003	263-267-275-279
11-859116	REC11-34933	259-263-267-283-297-306-308
11-859124	REC11-859124	263-267
11-859135	REC11-859135	271
11-862902	REC11-862902	219-221

OEM	REF	PAG.
11-862907	REC11-862907	283
11-863332	REC11-863332	304
11-8M0105210	REC11-8M0105210	283
11-92004	RM11-92004	277
12-18448	REC12-18448	275
12-19183-3	REC12-191833	283
12-191833	REC12-191833	259-263-267-269-271-275-277-279-281
12-20084	REC12-20084	192-219-221-222
12-27880	REC12-27880	261-265
12-29245	PAGB/T848-6	261-265
12-31211A2	REC12-31211Q03	275
12-31211Q03	REC12-31211Q03	263-267-279
12-31266	REC12-31266	261-265
12-32666	REC12-32666	259-295
12-32834	REC12-32834	304
12-35777	REC12-35777	304
12-35935	REC12-45176	269-271-295-297
12-36001	PAGB/T97.1-8	192-261-265
12-39116	REC12-39116	295
12-41721	RM12-41721	293-298
12-44163	REC12-44163	306-308
12-44164	REC12-44164	308
12-45176	REC12-45176	257-283
12-45810	REC12-45810	259-269-271
12-46765	REC12-46765	305
12-72498	REC12-72498	295
12-815472	REC12-815472	292
12-815952	REC12-815952	307
12-835467Q01	REC12-835467Q01	263-267-275-279
12-85058	REC12-85058	306
12-8M0042641	REC8M0042641	261
12-90931	REC12-90931	174
12-92721	REC350038	267
12-92721	REC350038	275
12-98548	RM12-98548	293-298
12076A2	MAR076	221-222-245-251
12076A2	SED3092610	247
12076A2	SED3092610	221-222
12632A7	REC12632A7	304
12644A1	REC12644A1	254
13-33734	REC13-33734	304
13-35048	REC13-35048	221-224-227-229-233-235-237-239-240-241-277
13-39107	REC13-39107	224
13-42351-1	REC13-423511	263-279
13-423511	REC13-423511	267-275
13-69432	REC304454	307-308
1336-3594A1	REC1347-818619R02	133
13447A1	REC17177A1	175
1347-6492A1	REC1347-816373A4	134
1347-6493A1	REC804626R02	132
1347-7361A1	REC1347-9661A3	132
1347-7362A1	REC1347-816373A4	134
1347-7363A1	REC804626R02	132
1347-7364A1	REC1347-9661A3	132
1347-7366A	REC804626R02	132
1347-804623R1/02	REC3304-9354A2	132
1347-804624R02	REC1347-816373A4	134
1347-804626R1	REC804626R02	132
1347-816373A4	REC1347-816373A4	134
1347-818619/R02	REC1347-818619R02	133
1347-8186191	REC1347-818619R02	133
1347-8186211	REC1348-818621R02	132
1347-818621R02	REC1348-818621R02	132
1347-818622	REC1376-818622R02	133
1347-8186221	REC1376-818622R02	133
1347-8288A1	REC804626R02	132
1347-8291A3	REC804626R02	132
1347-8292A4	REC1347-816373A4	134
1347-8296A4	REC1347-9661A3	132
1347-9415T	REC1347-816373A4	134
1347-9661A3	REC1347-9661A3	132
1347-9662A4	REC1347-816373A4	134
1348-818621/R02	REC1348-818621R02	132
1351-4263A1	REC1347-818619R02	133
1351-4263A2/A3	REC1347-818619R02	133
1351-5202A1	REC1347-818619R02	133
1351-6065A2	REC1347-818619R02	133
1351-7354A1	REC1347-818619R02	133
1351-8480A2	REC1348-818621R02	132
13524A1	REC13524A1	169

OEM	REF	PAG.
13524A4	REC13524A6	169
13524A5	REC13524A1	169
13524A6	REC13524A6	169
13524Q06	REC13524A6	169-174
13524T1	REC13524A1	169-174
13753A2	REC815407A2	168
1376-5659A1	REC1376-818622R02	133
1376-5744A1	REC1376-818622R02	133
1376-6152A1	REC1376-818622R02	133
1376-818622R02	REC1376-818622R02	133
1389-9562A1	REC3310-860070A2	135
1389-9670A2	REC3310-807312A1	133
1396-4148	REC1396-4148	142
1396-4656	REC1396-4656	138
1396-5222	REC1396-5238	139
1396-5238	REC1396-5238	139
1397-2060	REC1397-2060	136-139-140-141
1397-2067	REC823427A1	137
1397-2150	REC1397-2150	113
1397-2634	REC823427A1	137
1397-3327	REC1397-3327	136
1397-3459	REC823427A1	137
1397-5830	REC1397-8760	137
1397-5831	REC1397-5831	139-141
1397-5837	REC3302-9031	136
1397-6367A1	REC1397-6367A1	138
1397-7099	REC1397-8760	137
1397-7542	REC823427A1	137
1397-7547	REC823427A1	137
1397-8545	REC1397-8767Q	112
1397-8546	REC1397-3327	136
1397-8582	REC1397-8582	142
1397-8760	REC1397-8760	137
1397-8767	REC1397-8767Q	112
1397-8767Q	REC1397-8767Q	112
1397-8872	REC823427A1	137
1397-8873	REC823427A1	137
1397-8959	REC1397-3327	136
1398-3089	REC1398-3089	138
14-18323	REC14-18323	267-275-279-281
14-79447	REC14-79447	263
14-816629Q	REC90508-ZW1-003	267-275-279
14-86739	RM86739	279-281
14034A3	REC14034A3	306
14035A3	REC14035A3	306
14336A20	REC865380A13	155
14336A8	REC865380A13	155
14336A9	REC865380A25	155
14348A1	REC807166A3	253
14478T	BAMC-20-14478	249
14478T01	BAMC-20-14478	227-230-237-239-249
14505A2	REC14505A2	304
14587A5	REC14587A7	267-275
14801A1	RM14801A1	233-237-249
15-32563A1	REC15-32563A1	259-269-271
15-35980A1	REC15-35980A1	259-269-271
15-36178A02	REC15-36178A02	269-271
15-36178A02	REC15-36178A02	259
15-42637A1	REC15-42637A1	265-273
15-44491A1	REC15-44491A1	275
15-45691A1	REC15-45691A1	259-269
15-47397A1	REC15-47397A1	263-267-275
15-57007A1	REC15-57007A1	261
15-71013	REC15-71013	259-269-271
15-86749A1	REC15-86749A1	279-281-283
15-92914A1	REC15-92914A1	279-281
1547-815930A7	REC1547-815930A7	257-269-271
1547-861063A10	REC1547-861063A10	257
1547-861063A12	REC1547-861063A12	257
1547-861063A6	REC1547-861063A6	257
1547-861063A8	REC1547-861063A8	257
1547-9412A20	REC1547-9412A20	256
1547-9412A21	REC1547-9412A21	256
1547-9412A22	REC1547-9412A22	256
1547-9412A23	REC1547-9412A23	256
1589-865440H50	REC1589-865440H50	255
1589-865440H51	REC1589-865440H51	255
1589-865440H52	REC1589-865440H52	255
16-49545	REC16-49545	219-225-227-235-237-239-240-241
16-56826	REC16-56826	221
16-59579	REC16-59579	295-297
16-70236	REC16-70236	219-221
16-806300	REC16-806300	222
16-97520	REC16-97520	235
1623-5356A4	REC1623-5356A4	256-261
1623-815822A30	REC1623-815822A30	257-273
1623-815822A32	REC1623-815822A53	257
1623-815822A43	REC1623-815822A53	257
1623-815822A45	REC1623-815822A55	257
1623-815822A47	REC1623-815822A47	257
1623-815822A53	REC1623-815822A53	257
1623-815822A6	REC1623-815822A30	257
1623-815823A5	REC1623-815822A53	257
1623-8951A33	REC1623-8951A33	256
1623-8951A37	REC1623-8951A37	256-265
1623-8951A43	REC1623-8951A43	256
16457A4	REC805759Q01	168
1656-8866A55	REC1656-8866A55	255
1656-8866A63	REC1656-8866A63	255
1656-8M0046682	REC1656-8M0046682	255
1656-8M0046733	REC1656-8M0046733	255
1656-8M0046735	REC1656-8M0046735	255
1656-8M0046738	REC1656-8M0046738	255
16755Q1	REC16755Q1	276-277-197-199
16755Q1	REC86310	277
16792A39	REC16792A39	292
17-14872A1	REC17-14872A1	141-306
17-14872A1	REC21380	306
17-14873A1	REC17-14873A1	306
17-14873A1	REC21370	306
17-35973	REC331880	267
17-44166	REC17-44166	308
17-44166T1	REC14-44166T1	308
17-44167A1	REC17-44167A1	308
17-47617	REC17-47617	174
17-815953A01	REC17-815953A01	307
17-8M0073409	REC17-8M0073409	296
17177A1	REC17177A1	175
17494A1	REC17494A1	180
17649T	REC891736T	156
18-32665	REC18-32665	259-295
18525A1	REC18525A1	156
18643A7	REC18643A7	304
18654A1	CEF500512K	300
18654A1	REC18654A1	295-297-300
18920A1	REC18920A1	295-297
19-14842	REC19-14842	306-308
19-42682	REC19-42682	259
19-47579	REC19-47579	259
19-59504	REC19-59504	192
19-815951	REC19-815951	307
19-864689	REC19-864689	229-233
19405A4	REC13524A6	169
19742A1	RM806193A48	185
19742A3	RM806193A48	185
21-20553	REC13-35048	219-221-222
22-328022	REC22-328022	221-227-237-239-240-241-249
22-32803	REC22-32803	222-224-249
22-36382	REC22-36382	219-221-227-237-239-249
22-384071	REC22-384071	237
22-41622	REC22-41622	221-227-235-237-239-240-249
22-428611	REC22-428611	224-227-229-233-237-239-259-296
22-43828T	RM22-43828	296
22-49718	RM22-49718	305
22-67892	REC22-67892A05	281
22-73379	REC22-73379	227
22-73379	REC22-73379	229-233-237-239-291
22-806608A1	REC13980	219-221-222-249
22-860382	REC22-860382	295
22-861150A1	REC22-861150T02	185-295-297
22-861150A2	REC22-861150T02	185
22-861150T02	REC22-861150T02	185
22-861163	RM22-861163	185-295-297
22-862210A01	REC862210A01	227
22-862210A01	REC862210A01	229
22-862210A01	REC862210A01	230
22-862210A01	REC862210A01	237
22-862210A01	REC862210A01	239
22-862225	REC22-862225	179
22-863786A1	REC22-863786A1	233
22-865417	REC22-865417	295-297
22-866725	REC22-866725	221-224-229-233-235-237-239-241-241
22-88847A1	REC22-88847A1	291-296
22-89771Q2	GS31066	112
22-8M0058389	REC22-67892A05	283
22-98477A2	REC22-98477A2	179
23-29804T	REC23-29804T	261-265
23-30617A2	REC23-30617A2	261-265
23-32632	REC23-32632	259
23-67370	REC23-67370	273
23-805041A2	REC23-805041A2	295-303
23-806036A1	REC23-806036A1	295-303
23-806922	REC23-806922	178-180
23-807073	REC23-807073	308
23-815921A17	RM23-815921A17	272-273
23-815921A21	REC23-815921A21	273
23-8159501	REC23-8159501	307
23-816583	REC23-816583	257-273
23-816599	RM23-816599	291
23-824108	REC23-824108	267-275
23-847637	REC23-847637	293-298
23-847638	RM23-847638	298
23-853853002	REC23-853853002	217
23-853855001	REC23-853855001	217
23-861209A1	REC23-861209A1	277-297-303
23-87560091	RM23-87560091	277
23-87560094	RM23-87560094	277
23-87560097	RM23-87560097	277
23-89574	REC23-89574	305
23-90915	REC23-90915	174
23-92916	REC23-8M8000506	279-283
23-98356	RM23-98356	291-296
23-983571	RM23-983571	291-296
23-99291T	REC23-99291	306
23-99299	REC23-99299	304
23-99322	REC23-99322	292-304
23-99352	RM23-99352	293-298
24-17997A1	REC24-17997A1	269-271-277
24-30893	REC24-30893	267-275
24-30893	REC31-30895T	263
24-803192A2	REC27-803192A2	187
24-8M0094247	REC27-8M0094247	143
25-16524	REC25-16524	215
25-20081	REC25-20081	215
25-20415	REC25-16524	215
25-20826	REC308627	215-279-281-283
25-20863	REC25-80863	215
25-21836	REC25-21836	215-273
25-25439	REC25-25439	215-259-261-265-269-271
25-26543	REC333572	215
25-26722	REC302588	215
25-26802	REC25-8M0084884	183
25-26802	REC303347	215
25-26855	REC3852928	215
25-29439	REC309731	215
25-29845	REC25-29845	277
25-30224	REC25-30224	180
25-30224Q	REC25-30224	215
25-30271	REC25-30271	261-265
25-30529	REC25-30529	215
25-30613	REC25-30613	215-261-265
25-31305	REC553126	215
25-31534	REC25-31534	263-267-275-279-281
25-31986	REC3852866	215
25-32509	REC304174	215
25-32546	REC25-32546	215-259-269-271
25-33145	REC25-33145	215-261
25-33465	REC25-33465	192-215-279-283
25-33466	REC302537	215
25-33504	REC0307239	215-295
25-33756	REC305123	215
25-35027	REC25-35027	269-271-277
25-35029	REC25-35029	215
25-35276	REC310584	215
25-35480	REC321921	215
25-36318	REC25-36318	273
25-36318	REC301967	215
25-38099	REC25-38099	215-265
25-38101	REC25-38101	215
25-38933	REC25-38933	215
25-39695	REC326849	215
25-457101	REC25-457101	215-277

OEM	REF	PAG.
25-45711	**REC326649**	215
25-47254	**REC310414**	215
25-48171	**REC25-48171**	215-295-297
25-48452	**REC302035**	215
25-54029	**REC25-33465**	215
25-55682	**REC26-55682**	216
25-55801	**REC25-55801**	215-259
25-58390	**REC909140**	215
25-62700	**REC25-62700**	215
25-62704	**REC3852045**	215
25-62705	**REC25-62705**	215-277-295-297
25-62706	**REC25-62706**	277
25-62707	**REC25-62706**	215
25-64068	**REC333572**	215
25-65936	**REC331188**	215
25-67202	**REC25-67202**	215
25-67202	**REC313175**	215
25-70937	**REC25-70937**	215-259-269-271
25-805331	**REC3852865**	215
25-805331	**REC3852865**	283
25-8071341	**REC25-8M0084884**	183
25-822370	**REC25-33465**	279-281
25-823683	**REC25-823683**	215
25-87400A2	**REC25-87400A2**	307-308
25-89497	**REC25-89497**	215
25-89633	**REC32126**	183
25-896332077	**REC32077**	184
25-896332126	**REC32126**	183
25-8M0039163	**REC25-8M0084884**	183
25-90011	**REC25-90011**	215-265-273
25-94288	**REC25-94288**	192
25-97387	**REC25-97387**	215-277
25661T1	**REC378444**	157
26-12224	**REC26-12224**	216-263-267-275
26-12709	**REC26-12709**	216
26-127091	**REC26-12709**	277
26-14077	**REC26-76868**	216-275
26-14240	**REC26-14240**	216-217
26-14756	**REC26-14756**	213-214-216
26-16709A2	**REC26-16709A2**	276-277
26-16977	**REC26-16977**	216-261-265
26-20070	**REC908855**	216
26-24590	**REC26-24590**	216
26-26226	**REC310599**	216
26-30913	**REC26-30913**	216
26-31249	**REC26-24590**	216
26-32511	**REC26-32511**	216-259
26-32511A1	**REC26-32511A1**	258-259
26-32911	**REC26-32911**	216
26-33144A2	**REC26-33144A2**	261-265
26-33467	**REC26-33467**	216
26-34217	**REC26-34217**	216
26-36556	**REC26-36556**	279-281
26-36557	**REC26-36557**	259
26-38970	**REC26-38970**	261-265
26-416071	**REC26-8M2005029**	291-296
26-41953	**REC26-419533**	216
26-43035	**REC26-43035**	216
26-43036	**REC26-43036**	216
26-43993	**REC26-43993**	216-277
26-45577 1	**REC26-455771**	216-263-267-273-279-281-283
26-45587	**REC26-45587**	216
26-54925	**REC26-54925**	291
26-55682	**REC26-55682**	216-291
26-56397	**REC26-56397**	216
26-56788	**REC26-56788**	216
26-62818	**REC26-62818**	216
26-64818Q4	**REC27-64818Q4**	259
26-66302	**REC26-66302**	216-269-271-273
26-67388	**REC26-67388**	216-217
26-69188	**REC26-69188**	216
26-69189	**REC26-69189**	216
26-70081	**REC26-70081**	216
26-72785	**REC26-72785**	192-216
26-75413	**REC26-75624**	216
26-75624	**REC26-75624**	216-217
26-75980	**FEL17740**	216-217
26-75988	**REC26-75988**	216
26-76868	**REC26-76868**	216-263-267-279-281
26-76868A04	**REC26-76868A04**	279-281-283
26-79831	**REC26-79831**	216
26-804507	**REC26-8M0150312**	216

OEM	REF	PAG.
26-805080	**REC26-861694**	216
26-805344	**REC26-805344**	279-281-283
26-807006	**REC26-807006**	216-277
26-811554	**REC26-811554**	216
26-814622	**FELBS40013**	216-217
26-816464-1	**REC26-8164641**	273
26-8164641	**REC26-8164641**	216-261-265
26-816575A2	**REC26-816575A2**	273
26-816575A3	**REC26-816575A3**	272-273-278
26-821092	**REC26-821092**	216
26-8219471	**REC26-8219471**	216-217
26-823894	**REC26-823894**	216-259-269-271
26-861694	**REC26-861694**	283
26-864319	**REC26-864319**	271-273
26-88397	**REC26-88397**	269-271
26-88397A1	**REC26-88397A1**	269-271
26-88416	**REC26-88416**	291-296
26-892361	**REC26-24590**	216
26-89238	**REC26-89238**	216-261-265
26-892683	**REC26-892683**	129
26-8M0033407	**REC26-8M0033407**	283
26-8M0050563	**REC70817B**	216
26-8M0150312	**REC26-8M0150312**	216
26-90562	**REC26-90562**	192-216
26-90925	**REC26-90925**	216-217
26-94038	**REC26-94038**	216
26-96063	**REC26-897153**	216
26-965031	**REC26-965031**	216-259
26-97664	**REC70817B**	216
26-976641	**REC70817B**	216
27-13709	**REC27-13709**	217
27-14250	**REC27-14250**	215
27-18272	**REC27-18272**	224-251
27-33179Q02	**REC27-33179Q02**	180
27-33395	**FEL17420**	233-235-237-253
27-33395	**REC27-33395**	233-235-237-249-253
27-33956	**REC27-33956**	187
27-34213	**REC27-34213**	124-125
27-34486-3	**REC27-344861**	174
27-34897	**REC27-34897**	187
27-34898	**REC27-34898**	125
27-35898T	**REC27-35898T**	218
27-39915	**REC27-39915**	218-251
27-39917	**REC27-39917**	218-250
27-39923	**BAMC47-27-39923**	218-250
27-40431	**REC27-480431**	241
27-41609	**REC27-41609**	137-140
27-41812	**REC27-41812Q**	181
27-418122	**REC27-418122**	181
27-41812Q	**REC27-41812Q**	181
27-41813	**REC27-863724Q**	251
27-42457	**REC27-42457**	125
27-42631-1	**REC27-426311**	265
27-430331	**REC27-430331**	273
27-46401	**FEL17319**	225-252
27-46820	**REC27-46820**	239-240-253
27-47510Q	**REC27-47510Q**	180
27-47590-1	**REC27-475901**	181
27-47644-1	**REC27-47644-1**	290-291
27-48042	**REC27-48042**	240-251
27-480431	**REC27-480431**	219-225-235-240-250
27-48399	**REC27-48399**	137-141
27-48818Q01	**REC27-48818Q01**	181
27-49110	**REC27-49110**	187
27-49953	**REC27-49953**	215
27-524572	**REC27-524572**	137-139-140-141-142
27-52546	**REC27-52546**	218-252
27-53045Q01	**REC27-53045Q01**	181
27-53354	**REC27-53354**	219-252
27-54014Q1	**REC27-54014Q1**	108-299
27-5450	**REC27-54506**	181
27-54529	**REC27-54529**	215
27-55810 1	**REC27-558101**	259
27-56108	**REC27-56108**	215
27-56880	**REC27-56880**	187
27-60208	**REC27-60208Q**	181
27-60715	**REC27-60715**	137
27-64692	**REC27-64692**	137-219-221
27-64718A1	**REC27-64818Q4**	259
27-64818Q4	**REC27-64818Q4**	295-299
27-65577	**REC27-65577**	137
27-684547A02	**REC270**	229
27-68714	**REC27-68714A6**	201-203-215

OEM	REF	PAG.
27-68715	**REC27-68715**	217-224-252
27-70142	**REC27-70142**	137-139
27-70143	**REC27-8079821**	137
27-701431	**REC27-8079821**	137
27-70905	**REC27-70905**	217
27-72479A5	**REC27-72479A5**	217
27-72805	**REC27-72805**	125
27-73666	**REC27-73666**	217
27-73866	**FEL17460**	253
27-73866	**REC3852455**	241
27-73866	**REC3852455**	253
27-74830	**REC27-74830**	180
27-801333454	**REC27-8M0094247**	143
27-8052151	**REC27-8052151**	192
27-805396	**REC27-805396**	137
27-805760	**REC27-805760**	174
27-807218	**REC27-807218**	219-221-225-250
27-807982	**REC27-8079821**	137
27-8079821	**REC27-8079821**	137-221-222
27-8146801	**REC27-8146801**	180
27-815528	**REC27-815528**	222-252
27-8172771	**REC27-8172771**	273
27-818832	**REC27-863726**	251
27-85046	**REC27-850456**	215
27-854129	**REC27-8M0094247**	143
27-856081	**REC27-856081**	261-265
27-856704	**REC27-856704**	261
27-856705	**REC27-856705**	224-251
27-858524	**REC27-858524**	261-265
27-860232	**REC27-863726**	251
27-860233	**REC27-863724Q**	251
27-863724	**REC27-863724Q**	251
27-863724Q	**REC27-863724Q**	227-237-239-251
27-8637251	**REC27-8637251**	227-237-239-251
27-863726	**REC27-863726**	251
27-863726	**REC27-863726**	227-237-239-251
27-864547A02	**REC27-864547A02**	252
27-864547A02	**REC270**	233-251
27-864549A02	**REC270**	251
27-864549A02	**RM27-864549A02**	252
27-864550A02	**REC270**	251
27-864850A02	**REC27-864850A02**	252
27-871051	**REC27-863726**	251
27-89656-1	**REC27-89656-1**	181
27-896561	**REC27-89656-1**	224
27-898101475	**REC27-8M0094247**	143
27-8M2021920	**REC27-33918**	181
27-94914	**REC27-94914**	192
27-94996Q2	**REC27-94996Q2**	269-271-295-299
27-96429	**REC27-96429**	221-253
27-97542	**REC27-856705**	251
27-988231	**REC27-988231**	291-296
27-995061	**REC27-995061**	291
27-99757	**REC27-99757**	227-229-230-252
27-997771	**REC27-99777Q02**	251
27-997772	**REC27-99777Q02**	251
27-99777Q02	**REC27-99777Q02**	219-221-222-225-235-241-251
27-99960	**REC27-99960**	251
28-30281	**REC28-30281**	263-267
28-8M0032833	**REC28-8M0032833**	273
28-8M0032834	**REC8M0032834**	261
30-72961	**REC30-72961**	192
30-879194A01	**REC30-879194A01**	291
30-879194A01	**REC30-879194A01**	296
30-88957T	**REC30-88957T**	263-267
30-88957T1	**REC30-88957T**	275
30-98475T1	**REC30-98475T1**	179
300-8M0044991	**REC300-8M0044991**	161
31-15842	**REC31-15842**	275
31-15844	**REC31-15844**	275
31-30894A1	**REC31-30894A1**	275
31-30894A5	**RM31-30894A5**	271
31-30895T	**REC31-30895T**	263-267-275
31-30956T	**REC387247**	263-267-275
31-32573A1	**REC31-32573A1**	259-271
31-32575T1	**REC31-32575T1**	259-269-271
31-33138A1	**REC31-33138A1**	273
31-35928T1	**REC31-35928T1**	263-267-275
31-35988A12	**REC31-35988A12**	259-269
31-35990A1	**REC31-35990A1**	259-269-271
31-36387A1	**REC31-36387A1**	265-273

OEM	REF	PAG.
31-42647A1	REC387817	267-275
31-53079A1	REC31-53079A1	261
31-54042T	REC31-54042T	279-281
31-61100A1	REC31-61100A1	259-269
31-66668A1	REC31-66668A1	281
31-66818A1	REC31-66818A1	259
31-814653	REC31-814653T	275
31-815900	REC31-815900	277
31-828437A2	REC31-828437A2	267-275
31-828439A2	REC31-828439A2	275
31-86748A1	REC31-86748A1	279-281-283
31-86752A1	REC31-86752A1	279-281-283
31-86754T	REC31-86754T	279-281
31-86763A04	RM31-86763A04	277
31-86763A2	REC31-86763A2	277
31-86771	REC31-86771	277
31-87156	REC31-87156	277
31-92366A1	REC31-92366A1	263
31-99328A1	REC31-66668A1	279-283
31640A4	CM31640	288
31640A4	CM31640A	288
31640Q4	CM31640	263-267
31640Q4	CM31640A	263-267
31640Q4	REC31640Q4	285
31640Q4	REC31640Q4AL	285
32-14358	CEF500508K	253
32-14358	REC32-14358001	253
32-14358001	CEF500508K	253
32-14358001	REC32-14358001	227-220-230-233-237-239-253
32-14358T	CEF500508K	253
32-14358T	REC32-14358001	253
32-16012	REC32-16012	199
32-160211	REC32-160211	200-201-202
32-32461	REC32-32461	198-291-295
32-32461A1	REC32-32461	198-108
32-33189	REC32-33189	199-201-202-203
32-33220	REC32-33220	200
32-3322070	REC32-33220	200
32-4172533	REC32-4172533	198-291-295
32-43437	REC32-43437	198-296
32-44348	CEF500507K	253
32-44348	REC32-44348001	253
32-44348001	CEF500507K	253
32-44348001	REC32-44348001	221-222-227-229-230-233-237-239-253
32-44348T	CEF500507K	253
32-44348T	REC32-44348001	223-253
32-48132	REC32-48132	201-202-203
32-52481	REC32-52481	198-200-201
32-54236	REC32-54236	259
32-55816	REC32-55816	309
32-58432A2	REC32-58432A2	305-309
32-59841	REC32-59841	305-309
32-59842	REC32-59842	305-309
32-805375	RM32-805375	199-202
32-806209-1	RM32-806209-1	199
32-8066351	REC32-8066351	200-201-202-203
32-8066361	REC32-8066361	200-201-202-203
32-806856	REC32-806856	199-201-202-203
32-807407	REC32-807407	199
32-807458T	CEF500532K	253
32-807458T	REC32-807458T	253
32-807661	REC32-807661	199-201-202
32-807697	REC32-807697	200-201-202-203
32-808033	REC32-808033	199
32-808044-1	REC32-8080441	199
32-8600891	REC32-8600891	199-203
32-860144	RM32-860144	200-201
32-860205	REC32-860205	199-201-203
32-860220	REC32-860220	269-271
32-860331	RM32-860331	200
32-86036	REC32-86036	305-309
32-86036Q	REC32-86036	309
32-861057	RM32-861057	200
32-861127	REC32-861127	306-307-308-309
32-861128	REC32-861128	306-307-308-309
32-862124	REC32-862124	200
32-862139	REC32-862139	200
32-864588	REC32-864588	306-308-309
32-864589	REC32-864589	306-308-309

OEM	REF	PAG.
32-864959	REC32-864959	306-307-309
32-864960	REC32-864960	306-307-309
32-87117	REC32-871171	200
32-871171	REC32-871171	200
32-87234	REC32-87234	309
32-87235	REC32-87235	309
32-88795	REC32-88795	199
32-887952	REC32-887952	199-201-202
32-89653	REC32-89653	198
32-897181	REC32-897181	199-202-203
32-897301	REC32-897491	200-202-203
32-89749-1	REC32-897491	200-202-203
32-8M0062102	REC8M0062102	198
32-8M0062102	REC8M0062102	296
32-8M0062309	REC32-4172533	198
32-8M0062614	REC32-33220	200
32-90949T	CEF500511K	253
32-90949T	REC32-90949T	221-224-227-237-239-253
32-95858	REC32-861127	309
32-95859	REC32-861129	309
32-96246A4	REC32-96246A4	199-201-202
32-99902	REC32-864589	309
32-99902-1	REC32-864960	309
32-99903	REC32-864588	309
32-99903-1	REC32-864959	309
32-99904	REC32-99904	309
32-99904Q	REC32-99904	306-307-308
32193A2	REC1463-9382	162
32734A3	CEF500512K	300
32734A3	REC18654A1	300
33-55816	REC32-55816	305
3302-804689	REC3302-804689	136-140-141
3302-804844002	REC3302-804844002	139-140-141-171
3302-804845	REC3302-804845	138
3302-9031	REC3302-9031	136
3302-9033	REC35-53336	113
3302-9407	REC3302-9407	136-140-141
3302-9437	REC3302-804845	138
3304-9354A2	REC3304-9354A2	132
3310-804624R1	REC1347-816373A4	134
3310-806077A2	REC3310-860070A2	135
3310-806078A2	REC3310-860070A2	135
3310-807312A1	REC3310-807312A1	133
3310-807312R02	REC3310-807312A1	133
3310-815396A2	REC3310-860070A2	135
3310-860070A2	REC3310-860070A2	135
3310-861245A1	REC3310-864943A01	134
3310-861448A1	REC3310-864942A01	134
3310-864941A01	REC3310-864941A01	134
3310-864942A01	REC3310-864942A01	135
3310-864943A01	REC3310-864943A01	134
3310-9350A2	REC3310-860070A2	135
3310-9562A1	REC3310-860070A2	135
33662Q	REC33662	170
33765T	REC33765T	168
33863T	MP514693	193
34127T2	CM34127	288
34127T2	CM34127A	288
34235A1	REC3423A1	170
34235Q1	REC3423A1	170
34235T	REC34235T	170
34762A1	CM34762	288
34762A1	CM34762A	288
34765A2	REC34765A2	254
35-11004A1	REC35-8M0046752	112
35-16595Q	REC3850559	114
35-16595Q	REC3850559	121
35-16595T1	REC3850559	121
35-19485	REC127695-35150	121
35-19486	REC35-19486	116
35-19487	REC35-19487	120
35-49088A2	REC35-49088A2	113
35-49088Q2	REC35-49088A2	113
35-52731	REC3850559	121
35-53336	REC35-53336	113
35-53336Q	REC35-53336	113
35-802886Q	REC35-06007	114
35-803470	REC3517857	121
35-803897Q1	REC35-8M0046752	112
35-80470Q	REC3517857	121
35-805312	REC35-805312	120
35-805809	REC35-805809	121
35-805809T	REC35-805809	121
35-807256T	REC35-807256	116

OEM	REF	PAG.
35-808275	REC35-808275	116
35-809097	LENS3213	111
35-809097	RACS3213	111
35-809099	RACS3214	111
35-815419	REC016940	121
35-816168	REC35-816168	122
35-850481	REC500MA	119
35-850481A1	REC500MA	119
35-863829	RM35-863829	113
35-864572	REC864572	112
35-866171A01	REC35-866171A01	112
35-866340Q03	REC35-06003	104-105-106-107-114
35-866340Q03	RM35-866340Q02	114
35-866594K01	RM35-866594Q01	110
35-866594Q01	RM35-866594Q01	110
35-879172104	REC35-879172104	107-116
35-879172143	REC35-879172143	107-120
35-879312041	REC35-879312041	107-121
35-881132T	REC35-8M0138697	114
35-883702Q	REC35-06004	104-105-114
35-883702Q	RM35-883702Q	114
35-884380T	RAC31871	112
35-884380T	REC35-8M0122423	112
35-886638	LENS3227	111
35-886638	RACS3227	111
35-892665	REC35-892665	105-106-107-113
35-898272048	REC35-898272048	120
35-8M0020349	RAC31871	112
35-8M0020349	REC35-8M0122423	112
35-8M0046752	REC35-8M0046752	112
35-8M0060041	RAC31871	112
35-8M0060041	REC35-8M0122423	112
35-8M0066483	REC35-8M0066483	107-121
35-8M0067337	REC35-8M0067337	107-116
35-8M0067597	RECGS01030	120
35-8M0103963	REC35-19486	116
35-8M0116378	REC35-06007	114
35-8M0138697	REC35-8M0138697	114
35-8M0150917	REC882687	122
35-8M2001030	RM35-8M2001030	113
35-8M6002131	REC35-8M6002131	107-120
35-8M6002390	REC35-8M6002390	116
35-93568	REC93568	113
36-97335	REC3853341	216
36223A1	CEF500522K	299
36223A1	REC36223A2	299
36223A2	CEF500522K	299
36223A2	REC36223A2	299
39-74381A1	REC39-74381A1	217
391-5075	REC982209	168
391-5075Q1	REC982209	168
391-5088	REC89825302	169
391-5090	REC391-5090	170
391-5090A1	REC391-5090Q1	170
391-5090Q1	REC391-5090Q1	170
391-5092	REC8M6001217	170
391-5093	REC8M6001217	170
391-7057	REC89825302	169
391-7057T	REC89825302	169
391-898253001	REC8M6001217	170
391-898253004	REC391-5090	170
392-6316	REC392-6316	176
392-6318	REC835702	168
392-6318T	REC835702	168
392-6324	REC8M6001249	170
392-6324A1	REC392-6324Q1	171
392-6324Q1	REC392-6324Q1	171
392-6324T1	REC392-6324Q1	171
392-6325	REC8M6001219	170
392-6325A1	REC392-6325Q1	171
392-6325Q1	REC392-6325Q1	171
392-6325T1	REC392-6325Q1	171
392-6326	REC834975	169
392-6326T	REC834975	169
392-6330	REC392-6330	176
392-7803A4	REC300-00879	161
392-805570A2	REC300-00879	161-174
392-806529A1	REC1463-9382	162
392-863704T	REC3861985	161
392-881732	REC3861267	161
392-889925	REC3859078	161
392-898223002	REC8M6001249	170
392-898253005	REC8M6001219	170
392-8M0054588	REC3861985	175
392-9086	REC392-9086T	168

OEM	REF	PAG.
392-9086T	**REC392-9086T**	168
392-9089	**REC3853801**	169
392-9089Q	**REC3853801**	169
392-9089T	**REC3853801**	169
392-9766	**REC392-9766**	168
392-9766Q1	**REC392-9766**	168
392-9766T	**REC392-9766**	168
392-9767	**REC3853801**	169
393-3230	**REC3854331**	168
393-3230	**REC393-4988**	168
393-4988	**REC393-4988**	168
393-4988T	**REC3854331**	168
393-4988T	**REC393-4988**	168
393-4988T2	**REC3854331**	168
393-4988T2	**REC393-4988**	168
393-9459Q1	**REC3854331**	168
41141A2	**REC862077A1**	124
414336A6	**REC865380A25**	155
41629A2	**RM45-41629A2**	279
41641A8	**REC41641A8**	279
41641A8	**REC41641A8**	281
41646A9	**RM41646A9**	297
41674T	**REC41674T**	296
41674T	**REC41674T**	297
42260A6	**RM42260A6**	291
42419A1	**REC42419A1**	156
42600A09	**REC42600A09**	159
42600A1	**REC42600A09**	159
42600A3	**REC42600A09**	159
42600A5	**REC42600A09**	159
42724A3	**REC42724A3**	259
42815A6	**RM42815A6**	295
43-14063A1	**RM43-14063A1**	279-281
43-18411A2	**REC43-18411A2**	259-269
43-18411A4	**REC43-18411A2**	259-268-269
43-45814A5	**REC43-45814A5**	259-269
43-55778A3	**REC43-55778A3**	259-269
43-66773A3	**RM43-66773A3**	259
43-75325A3	**REC43-75325A3**	259-269
43-818807	**REC43-818807**	174
43-828073A1	**REC43-828073A1**	267-275
43-853592A2	**REC43-878617A2**	275
43-853640A2	**REC43-853640A2**	271
43-853641A2	**REC43-853641A2**	271
43-853642A2	**REC43-853642A2**	271
43-853643A2	**REC43-853643A2**	271
43-878087A2	**REC43-878087A2**	275
43-887903A1	**RM43-887903A1**	277
43-887906A1	**RM43-887906A1**	277
43-887909A1	**RM43-887909A1**	277
43557A1	**REC805759Q01**	168
43881A17	**RM43881A17**	296
43994A2	**CM43994**	288
43994A2	**CM821631**	288
43994A2	**CM821631A**	288
44-41630T	**RM44-41630T**	279-281
44-8146061	**REC44-8146061**	267
44-824110	**REC44-824110**	263-267-275
44-850308	**REC44-850308**	275
44-850308	**RM44-41630T**	279
44-865322T	**RM44-865322T**	283
44181A1	**RM44181A1**	217
44182A1	**FEDV-1984**	217
44182A1	**RM44182A1**	217
44266T	**RM807130A4**	250
44266T1	**RM807130A4**	250
44354A3	**MAR988**	245
44354A3	**MAR988**	245
45-41629A2	**RM45-41629A2**	281
45-41939F1	**REC45-41939F1**	261
45-42634	**REC45-42634**	265
45-55796	**REC45-55796**	259
45-55796-1	**REC45-557961**	269
45-557961	**REC45-557961**	271
45-812773	**RM45-812773T**	277
45-816919	**REC45-816919**	273
45-853648	**REC45-853648**	273
45518A3	**REC45518A3**	295-302
45518T1	**REC45518T1**	295-302
45589A3	**REC45589A3**	295-302
46-44292Q03	**REC46-44292Q03**	189-265
46-48748A1	**REC46-48748T1**	189
46-48748T1	**REC46-48748T1**	189
46-59112A2	**REC46-72774A32**	187
46-60367A1	**REC46-96148A8**	190
46-63450A2	**REC46-72774A32**	187
46-64141A11	**REC46-64141A11**	189-260-261
46-72774A11	**REC46-72774A32**	187
46-72774A32	**REC46-72774A32**	187
46-72774A69	**RM46-807151A8**	185
46-73823A7	**REC46-72774A32**	187
46-807151A12	**REC46-72774A32**	187
46-807151A14	**REC46-807151A14**	192
46-807151A8	**RM46-807151A8**	185
46-807151A9	**REC46-807151A9**	186
46-862914T10	**REC46-862914T10**	187
46-879194401	**REC879194401**	185
46-96148A5	**REC46-96148A8**	190
46-96148A8	**REC12120**	189-264-265
46-96148A8	**REC46-96148A8**	190
46-96148T1	**REC46-96148T1**	261-265
46020T02	**REC46020T02**	259-269
46399A1	**CM46399**	288
46399A1	**CM46399A**	288
47-43026Q02	**CEF500301**	188
47-43026Q02	**REC47-43026Q02**	109-188-273
47-43026Q06	**REC47-43026Q06**	108-190
47-59362A4	**REC47-59362A4**	187-191
47-59362Q01	**CEF500109**	188
47-59362Q01	**REC47-59362Q01**	188-192
47-59362Q08	**REC47-59362Q08**	191
47-59362T5	**REC47-59362T5**	191
47-59362T6	**REC47-59362T6**	191
47-801332602	**CEF500106GT**	188
47-801332602	**JOH09-1028B**	188
47-801332602	**REC3841697**	188
47-808145T	**SHE15979**	186-191
47-809866T	**CEF500161**	188
47-809866T	**REC47-809866T**	188
47-816814T	**CEF500177GT**	188
47-816814T	**JAB17018-0001**	107-188
47-816814T	**REC3593573**	188
47-831311350	**CEF500161**	188
47-831311350	**REC47-809866T**	188
47-853126	**CEF500167**	188
47-853126	**REC15000K**	188
47-853126	**SHE15000K**	188
47-862232A2	**CEF500159G**	188
47-862232A2	**REC47-862232A2**	188
47-879194186	**CEF500114T**	188
47-879194186	**JAB17937-0001-P**	107-188
47-879194186	**REC17937-0001**	188
47-879312025	**CEF500120T**	188
47-879312025	**REC10615K**	186-188
47-879312025	**SHE10615K**	107-188
47-896332063	**CEF500155**	188
47-896332063	**JAB11979-0001**	107-188
47-896332063	**REC11979-0001**	188
47-89984Q5	**REC47-89984Q5**	190
47-89984Q5	**RECMC00004**	190
47-89984T4	**CEF500313G**	188
47-89984T4	**REC47-89984T4**	188-261-265
47-8M0104229	**CEF500159G**	188
47-8M0104229	**REC47-862232A2**	188
47441A1	**REC47441A1**	180
47442A1	**REC8M0061068**	180
47587A2	**BAMC29-47587**	177
47638A1	**BA1-47638**	218-250
47735A1	**BAMC1-47735**	244
47735A17	**BAMC1-47735**	240-244
47736A17	**BAMC1-47736**	240-244
47737A1	**BAMC1-47737**	240-244
47737A10	**BAMC1-47737**	244
47738A1	**BAMC1-47738**	240-244
47738A10	**BAMC1-47738**	244
47877A4	**BAMC20-76668**	245
48-13700A46	**SOL1511-153-19**	316
48-13700A46	**SOL1571-153-19**	316
48-13701A46	**SOL1512-153-19**	316
48-13701A46	**SOL1572-153-19**	316
48-13702A46	**SOL1511-153-21**	316
48-13702A46	**SOL1571-150-21**	316
48-13703A46	**SOL1512-153-21**	316
48-13703A46	**SOL1572-150-21**	316
48-13704A46	**SOL1511-153-23**	316
48-13704A46	**SOL1571-148-23**	316
48-13705A46	**SOL1572-148-23**	316
48-13706A46	**SOL1571-145-25**	316
48-13707A46	**SOL1572-145-25**	316
48-16312A46	**SOL1531-145-15**	316
48-16314A46	**SOL1531-143-17**	316
48-16314A46	**SOL1551-148-16**	316
48-16315A46	**SOL1532-143-17**	316
48-16315A46	**SOL1552-148-16**	316
48-16316A46	**SOL1531-140-19**	316
48-16316A46	**SOL1551-148-18**	316
48-16317A46	**SOL1532-140-19**	316
48-16317A46	**SOL1552-148-18**	316
48-16318A46	**SOL1531-140-21**	316
48-16318A46	**SOL1551-148-20**	316
48-16319A46	**SOL1532-140-21**	316
48-16319A46	**SOL1552-148-20**	316
48-16320A46	**SOL1531-140-23**	316
48-16320A46	**SOL1551-143-22**	316
48-16321A46	**SOL1532-140-23**	316
48-16321A46	**SOL1552-143-22**	316
48-16322A46	**SOL1531-140-25**	316
48-16322A46	**SOL1551-140-24**	316
48-16543A46	**SOL1552-148-19**	316
48-16544A46	**SOL1551-148-19**	316
48-16545A46	**SOL1552-145-21**	316
48-16546A46	**SOL1551-145-21**	316
48-16547A46	**SOL1552-143-22**	316
48-16548A46	**SOL1551-143-22**	316
48-16549A46	**SOL1552-140-24**	316
48-16550A46	**SOL1551-140-24**	316
48-18278A46	**SOL1511-155-17**	316
48-18278A46	**SOL1571-155-17**	316
48-18610A40	**SOL1611-193-15**	316
48-18610A40	**SOL1641-193-15**	316
48-18610A6	**SOL1611-193-15**	316
48-18610A6	**SOL1641-193-15**	316
48-18611A40	**SOL1612-193-15**	316
48-18611A40	**SOL1642-193-15**	316
48-18611A6	**SOL1612-193-15**	316
48-18611A6	**SOL1642-193-15**	316
48-18612A40	**SOL1611-188-17**	316
48-18612A40	**SOL1641-188-17**	316
48-18612A6	**SOL1611-188-17**	316
48-18612A6	**SOL1641-188-17**	316
48-18613A40	**SOL1612-188-17**	316
48-18613A40	**SOL1642-188-17**	316
48-18613A6	**SOL1612-188-17**	316
48-18613A6	**SOL1642-188-17**	316
48-18614A40	**SOL1611-183-19**	316
48-18614A40	**SOL1641-183-19**	316
48-18614A6	**SOL1611-183-19**	316
48-18614A6	**SOL1641-183-19**	316
48-18615A40	**SOL1612-183-19**	316
48-18615A40	**SOL1642-183-19**	316
48-18615A6	**SOL1612-183-19**	316
48-18615A6	**SOL1642-183-19**	316
48-18616A40	**SOL1611-178-21**	316
48-18616A40	**SOL1641-178-21**	316
48-18616A6	**SOL1611-178-21**	316
48-18616A6	**SOL1641-178-21**	316
48-18617A40	**SOL1612-178-21**	316
48-18617A40	**SOL1642-178-21**	316
48-18617A6	**SOL1612-178-21**	316
48-18617A6	**SOL1642-178-21**	316
48-18618A40	**SOL1641-175-23**	316
48-18618A6	**SOL1641-175-23**	316
48-18619A40	**SOL1642-175-23**	316
48-18619A6	**SOL1642-175-23**	316
48-18620A40	**SOL1641-175-23**	316
48-18620A6	**SOL1641-173-25**	316
48-18621A40	**SOL1642-173-25**	316
48-18621A6	**SOL1642-173-25**	316
48-19838A46	**SOL1511-158-15**	316
48-19841A46	**SOL1512-158-15**	316
48-78114A45	**SOL1511-160-13**	316
48-78114A45	**SOL1531-156-13**	316
48-78116A4	**SOL1513-148-15**	316
48-78116A4	**SOL1531-145-15**	316
48-78126A45	**SOL1511-142-23**	316
48-78126A45	**SOL1531-140-25**	316
48-826072A46	**SOL1511-160-13**	316
48-831850A45	**SOL1513-145-17**	316
48-832828A45	**SOL1511-150-15**	316
48-832828A45	**SOL1513-145-17**	316
48-832828A45	**SOL1531-143-17**	316
48-832830A45	**SOL1511-148-17**	316
48-832830A45	**SOL1513-143-19**	316
48-832830A45	**SOL1531-140-19**	316
48-832832A45	**SOL1511-145-19**	316
48-832832A45	**SOL1513-140-21**	316
48-832832A45	**SOL1531-140-21**	316
48-832834A45	**SOL1511-143-21**	316

OEM	REF	PAG.
48-832834A45	SOL1513-140-23	316
48-832834A45	SOL1531-140-23	316
48-834851A45	SOL1514-145-17	316
48-834852A45	SOL1513-143-19	316
48-834853A45	SOL1514-143-19	316
48-834854A45	SOL1513-140-21	316
48-834855A45	SOL1514-140-21	316
48-90159A46	SOL1512-155-17	316
48-90159A46	SOL1572-155-17	316
48101A1	BAMC20-72963	246
48752T	REC48752T	261-265
5-5000147CP	REC1623-8951A33	256
5-5000162CP	REC1623-8951A33	256
5-5000181CP	REC1623-8951A33	256
5-5000194CP	REC1623-8951A33	256
5-5010147CP	REC1623-8951A43	256
5-5010162CP	REC1623-8951A43	256
5-5010181CP	REC1623-8951A43	256
5-5010194CP	REC1623-8951A43	256
5-5111200TP	REC1623-815822A47	257
5-5111300TP	REC1623-815822A47	257
5-5111400TP	REC1623-815822A47	257
5-5111500TP	REC1623-815822A47	257
5-5121200TP	REC1623-815822A53	257
5-5121300TP	REC1589-865440H52	255
5-5121300TP	REC1623-815822A53	257
5-5121300TP	REC1656-8866A63	255
5-5121400TP	REC1623-815822A53	257
5-5121500TP	REC1623-815822A53	257
5-5231100NP	REC1589-865440H50	255
5-5231100NP	REC1656-8866A55	255
5-5231100TP	REC1589-865440H50	255
5-5231100TP	REC1656-8866A63	255
5-5231200NP	REC1589-865440H51	255
5-5231200NP	REC1656-8866A55	255
5-5231200TP	REC1589-865440H51	255
5-5231200TP	REC1656-8866A63	255
5-5231300NP	REC1589-865440H50	255
5-5231300NP	REC1656-8866A55	255
5-5441100TP	REC1589-865440H50	255
5-5441100TP	REC1656-8M0046733	255
5-5441200TP	REC1589-865440H51	255
5-5441200TP	REC1656-8M0046733	255
5-5441300TP	REC1589-865440H51	255
5-5441300TP	REC1656-8M0046735	255
5-5441400TP	REC1589-865440H50	255
5-5441400TP	REC1656-8M0046738	255
5-5441500TP	REC1589-865440H52	255
5-5441500TP	REC1656-8M0046738	255
5-5441600TP	REC1589-865440H51	255
5-5441600TP	REC1656-8M0046738	255
5-5441700TP	REC1589-865440H52	255
5-5441700TP	REC1656-8M0046682	255
50-12782	REC3854190	151
50-47454	REC50-97499A2	152
50-56886	REC3854190	151
50-65785A1	REC50-97499A2	152
50-69865A1	REC3854190	151
50-72550A2	REC50-97499A2	152
50-79604A3	REC50-97499A2	152
50-805991	REC3916854	152
50-806963A2	REC50-806965A4	152
50-806965A2	REC50-8M0090697	152
50-806965A4	REC50-806965A4	152
50-806965A4	REC50-8M0090697	152
50-808011A05	REC50-808011A05	151
50-80811A4	REC50-808011A05	151
50-812429A2	REC50-8M0090697	152
50-863007A1	REC50-806965A4	152
50-863007A1	REC50-863007A1	151
50-864340A2	REC3885317	151
50-864340A2	REC50-99418A2	151
50-88671A1	REC50-808011A05	151
50-8M0090697	REC50-8M0090697	152
50-8M0095471	REC50-8M0095471	151
50-99418A2	REC50-99418A2	151
52-853594T	REC52-853594T	263-267-275
52-865344A01	RM52-865344A01	277
53-23720	REC53-23720	192
53-29641	REC53-29641	265-273
53-805272	REC53-805272	308
53-815949	REC53-815949	108-307
53-87843	RM53-87843	185-295-297
53-88242	REC53-88242	279-281-283
53114A1	CEF500524	253
53114A1	REC53114A1	219-225-253

OEM	REF	PAG.
54-12078	RM54-12078	293-298
54-38863	REC54-38863	291-296-300
54-815504256	GS38320	221-222-227-237-239
54-815504272	GS38320	233
54-815504320	REC54-815504320	108-291-296-300
54-815504372	GS38320	221
54-815504372	GS38322	221-227-230-237-239
54-815504412	REC54-815504412	295
54-815504456	GS38310	229-233
54-815504456	GS38320	229
54-86049	REC54-86049	295-297-300
54-896332164	RM21325765	143
55131A5	REC55131A5	178
55538A2	BAMC-20-55538	218-245
55989A9	CM55989	288
55989A9	CM55989A	288
55989Q9	CM55989	288-291
55989Q9	CM55989A	288
55989Q9	REC55989Q9	109-285-291
55989Q9	REC55989Q9AL	108-285
55989Q9	REC55989Q9M	285
57-13457Q	REC57-13457Q	105-195-196-198
57-13458Q	REC966931	196-198
57-32850	REC3852106	198
57-34359	REC57-34359	198
57-36356	REC57-36356	198
57-37619T,Q	REC57-34359	198
57-45856	REC3858462	198
57-48120Q1	REC829207	198
57-48122Q	REC57-48122Q	196-198
57-49043A1	REC57-49043A1	198
57-49211	REC57-64416	198
57-49213A1	REC3858462	198
57-52692	REC57-52692	198
57-64032Q1	REC57-49043A1	198
57-64416	REC57-64416	198
57-65607T	REC57-65607Q	198
57-69143Q	REC3852106	198
57-74271Q	REC966903	195-196-198
57-77274	REC966900	195-198
57-78200Q1	REC57-78200Q1	196-198
57-807755Q04	REC57-807755Q04	197
57-807755Q05	REC57-807755Q05	197
57-816295Q	REC57-816295Q	104-195-196-198
57-817113	REC57-817113	197
57-861049Q	REC57-861049Q	197
57-861757Q	REC57-861757Q	197
57-861758Q	REC57-861758Q	197
57-861759Q	REC57-861759Q	197
57-865615005	REC57-865615Q05	197
57-865615010	REC57-865615Q10	197
57-865615Q01	REC57-865615Q01	197
57-865615Q02	REC57-865615Q02	197
57-865615Q03	REC57-865615Q03	104-105-197
57-865615Q04	REC57-865615Q04	104-105-197
57-865615Q06	REC57-865615Q06	197
57-865615Q07	REC57-865615Q07	197
57-865615Q08	REC57-865615Q08	104-105-197
57-879172120	REC57-879172120	107-198
57-879194425	REC57-879194425	198
57-882531	REC57-882531	198
57-882531T	REC57-882531	198
57-898101579	REC57-898101579	107-198
57-898101624	REC57-879194425	198
57-8M0074767	REC57-8M0097728	197
57-8M0088876	REC57-8M0088876	197
57-8M0093495	REC57-8M0093495	198
57-8M0097728	REC57-8M0097728	197
57-91035Q1	REC57-91035Q1	195-196-198
57-93658Q	REC3858462	198
58217Q	REC58217	169
58759A1	BAMC-1-58759	243
58759A10	BAMC-1-58759	243
58759A13	BAMC-1-58759	243
58759A14	BAMC-1-58759	225-243
59078Q3	REC59078Q3	181
59498A1	BAMC29-59498	180
59501A1	REC59501A1	192
59826A3	REC59826A3	303
59830A7	REC59830A7	259-269-271
6-6010000CP	TRANSONALPHAI	291
6-6111002LP	TRANSONALPHA2G	291
6-6211002NZ	TRANSONBRAVO	298

OEM	REF	PAG.
6-6311002NZ	TRANSONBRAVO	298
60252A2	REC60252A2	219-221-225-235-241-250
60372A1	BAMC29-60372	180
60372A2	BAMC29-60372	180
60426A1	HOT20971	246
60932A1	CEF500516K	299
60932A1	REC60932A4	299
60932A4	CEF500516K	299
60932A4	REC60932A4	295-299
61811A3	BAMC20-61811A4	248
61811A4	BAMC20-61811A4	248
61851A3	BAMC20-61851A3	248
62092T	REC62092T	124
623-815822A55	REC1623-815822A55	257
62898A1	BAMC29-62898	180
63122A10	BAMC-1-63122	218-242
63122A13	BAMC-1-63122	212-242
63122A14	BAMC-1-63122	218-242
63588A1	BAMC29-63588	178
65057A1	REC65057T1	157
65057T1	REC65057T1	157
65533A1	REC65533A1	291
65603A12	HOT20962	241-244
65603A3	HOT20962	244
65604A12	HOT20958	241-244
65604A4	HOT20958	244
66081A2	REC66081A2	259-269-271
66668A1	REC31-66668A1	279
68521A3	REC17177A1	175
68521A4	REC17177A1	175
69354A2	REC69354A2	217-303
70125A02	REC70125A02	142
70125A1	REC70125A02	142
70981A3	CEF500523	253
70981A3	REC70981A3	221-224-221-235-237-239-253
71464A01	REC71464A01	142
72608T	MP425149	254
72963A1	BAMC20-72963	246
72963A9	BAMC20-72963	240-246
72964A1	BAMC20-76668	245
73813A1	HGE4870	218-219-221-225-235-240-241-250
73873A1	REC73873A1	292
74639Q02	CEF500513K	299
74639Q02	REC74639Q02	291-296-299
74905A3	REC17177A1	175
75832T	REC75832T	259-269
75832T1	REC3850812	259-269
76214-4	CM762144	288
76214-4	CM762144A	288
76214-5	TEN00820	286
76214A2	CM762144	281
76214A2	CM762144A	281
76214A2	CM762145	288
76214A2	CM762145A	288
76214Q5	CM762144	283
76214Q5	CM762144A	283
76214Q5	CM762145	275-270-288
76214Q5	CM762145A	275-288
76214Q5	CM76214Q5	288
76214Q5	REC76214Q5	284-285
76214Q5	REC76214Q5AL	109-284-285
76325A2	REC76325A2	221-225-245-251
76351A04	HGE6351	241
76351A04	HOT20971	219-225-235-241-246
76351A2	HOT20971	246
76514Q5	CM762145A	279
76668A1	BAMC20-76668	245
76668A3	BAMC20-76668	240-245
76771A2	HOT20978	219-235-241
76771A2	REC76771A2	245
76771A3	REC76771A2	245
76788A1	BAMC20-72963	246
76850A2	REC76850A2	304
77234A2	HOT20950	244
77234A7	HOT20950	235-244
78403A1	REC78403A2	153
78403A2	REC69729	153
78403A32	REC78403A2	153
78458A1	CEF500520K	300
78458A1	REC78458A1	297-300
78984A08	REC78984A08	177

OEM	REF	PAG.
78984A1	**REC78984A08**	177
78985A1	**BAMC29-78985**	178
802630T	**REC802630T01**	129
802630T01	**REC802630T01**	129
802632T	**REC802632T**	130
802632T	**REC9-33304**	131-150
804483T	**REC3854548**	168
804626R02	**REC804626R02**	132
805016A1	**REC805016A1**	142
805025A2	**REC3858261**	127
805025A2	**REC861155A6**	127
805101T	**REC805101T**	283
805182A1	**RM805182A1**	283
805185A3	**REC805185A3**	176
805185A36	**REC805185A36**	174-176
805185A37	**REC805185A3**	174
805217A1	**REC3850396**	144
805218T	**REC3850397**	148
805222A1	**REC805222A1**	173-176
805223T	**REC805223T**	148
805224A1	**REC3855194**	145-149-150
805225A1	**REC9-33303**	131-149-150
805226A1	**REC8M0125617**	144
805227A1	**REC805227A1**	130-150
805298A1	**REC805298A1**	142
805320A03	**REC805320A03**	146-293-298
805370A1	**RM45-41629A2**	283
805447T	**REC805884T**	153
805536A2	**REC805536A2**	259-269-271
805544T	**REC8M0077616**	145
805602A1	**SED3092000**	247
805602A2	**SED3093300**	247
805629A1	**REC805629A1**	221-250
805656A2	**REC3858261**	127
805656A2	**REC861155A6**	127
805656A5	**REC3858261**	127
805656A5	**REC861155A6**	127
805656A6	**REC3858261**	127
805656A6	**REC861155A6**	127
805759A1	**REC805759Q01**	168
805759A2	**REC805759Q01**	168
805759A5	**REC805759Q01**	168
805759Q01	**REC805759Q01**	168-174
805759T1	**REC805759Q01**	168
805759T2	**REC805759Q01**	168
805884T	**REC805884T**	153
806031A2	**RM806031A2**	295
806034A2	**RM806034A2**	293-298
806105Q1	**CM806105**	267-275
806105Q1	**CM806105A**	267-275
806105Q1	**REC806105Q1**	284-285
806105Q1	**REC806105Q1AL**	109-284-285
806188A1	**CM806105**	288
806188A1	**CM806105A**	288
806188A1	**CM806188**	288
806188A1	**CM806188A**	288
806189Q1	**CM806189**	288-307
806189Q1	**CM806189A**	288-307
806189Q1	**REC806189Q1**	284-285
806189Q1	**REC806189Q1AL**	109-284-285
806190A1	**CM806190**	308
806190A1	**CM806190A**	308
806190Q1	**CM806190**	288
806190Q1	**CM806190A**	288
806190Q1	**REC806190Q1**	284-285
806190Q1	**REC806190Q1AL**	284-285
806191T	**REC806191T**	307-308
806193A20	**RM806193A48**	185
806193A38	**RM806193A48**	185
806193A48	**RM806193A48**	185
806235A04	**HOT20956**	242
806490T	**REC806490T**	148
806612T	**REC806612T**	145
806673T	**REC806673T1**	161
806673T1	**REC806673T1**	161
806867A12	**REC860235A03**	243
806867A3	**REC860235A03**	243
806867A8	**HOT20956**	242
807078A6	**MAR078**	244
807078T09	**MAR078**	244
807078T10	**MAR078**	239-244
807130A4	**RM807130A4**	227-229-233-237-239-250
807151A14	**REC46-807151A14**	191
807166A1	**REC807166A1**	227-229-231-233-237-239-253
807166A3	**REC807166A3**	253
807252Q3	**REC807252Q3**	182
807252Q4	**REC807252Q4**	182
807252Q5	**REC807252Q5**	182
807252T1	**REC8M0089715**	182
807252T2	**REC8M0091470**	182
807252T4	**REC807252Q4**	182
807289A1	**REC425062**	254
807371T1	**RM807371T1**	184
807476A6	**MAR3320PAR**	248
807652T	**REC807652T**	154
807653T	**REC807653T**	154
807729T	**MP514516**	193
807729T	**REC8M0153706**	193
807731T	**REC861579**	186
807757T	**REC807757T**	193
807914A1	**MAR988**	245
807914A1	**MAR988**	245
807929A1	**REC807929A1**	273
807952A1	**REC807952A1**	129-149-150
807964A1	**REC807964A1**	173-176
807988A03	**MAR988**	227-230-237-239-245
807988A03	**MAR988**	227-230-237-239-245
807988A03	**SED3092600**	239-247
807988A03	**SED3095500**	247
807988A2	**MAR988**	245
807988A2	**MAR988**	245-251
807988A3	**SED3092600**	227
808483T3	**REC3854548**	168
808504T1	**REC65L-13915-00**	113
809463A1	**REC3859054**	157
81-64851	**REC64851**	170
811536T	**REC811536T**	136
811575T	**MP425113**	254
811637T	**REC3854003**	162
811639T	**REC3854001**	145-162-173
812454A1	**REC862048A1**	124
812454A3	**REC862048A1**	124
814263A1	**GS38105**	303
814281A7	**REC8M0052939**	292
814604A1	**REC814604T1**	275
814606 1	**REC44-8146061**	275
814819A2	**REC814819A2**	259-269
814819A3	**REC59830A7**	277
814819A7	**REC814819A7**	271
815303T	**REC815303T**	297
815407A2	**REC815407A2**	168
815407Q02	**REC815407A2**	168-174
815471T1	**REC815471T1**	300
815919A1	**REC815919A1**	273
815935A7	**REC815935A7**	307
815954A7	**REC815954A7**	307
816148A1	**REC17177A1**	175
816219A5	**HOT20937**	242
816431A1	**CEF500515K**	299
816431A1	**REC816431A1**	295-299
816597A1	**REC816597A1**	273
816629Q	**REC90508-ZW1-003**	263
817119A1	**REC3860769**	153
817119A4	**REC3860769**	153
817119A4	**REC78403A2**	153
817275A1	**RM817275A1**	273
817275Q05	**REC817275Q05**	109-191
817377T	**REC817377**	176
817378T	**REC3854002**	161
818349T1	**REC818349T1**	263-267-275
818383T	**REC861677T**	124
818763A10	**REC818763A10**	263-267-275
821509T01	**REC882751A04**	158
821629Q1	**CM821629**	269-271-288
821629Q1	**CM821629A**	269-271-288
821629Q1	**REC821629Q1**	284-285
821629Q1	**REC821629Q1AL**	284-285
821630A1/Q1	**CM821630**	288
821630A1/Q1	**CM821630A**	288
821630Q1	**CM821630**	277
821630Q1	**CM821630A**	277
821630Q1	**REC821630Q1**	284-285
821630Q1	**REC821630Q1AL**	284-285
821631A1	**CM43994**	288
821631A1	**CM821631**	288
821631A1	**CM821631A**	288
821631Q	**CM821631**	296
821631Q	**CM821631A**	296
821631Q1	**CM821631**	291
821631Q1	**CM821631A**	291
821631Q1	**REC821631Q1**	284-285
821631Q1	**REC821631Q1AL**	108-109-284-285
822777Q1	**CM46399**	288
822777Q1	**CM46399A**	288
823426A1	**REC823426A1**	139-140-141-142
823427A1	**REC823427A1**	137
824324T	**MP425024**	254
824330T	**MP425036**	254
827682T	**REC827682T**	126
828151A1	**REC3854138**	158
828692A1	**REC828692A1**	269-271
828830A2	**REC828830A2**	275
834832T2	**REC8M0064021**	154
84-813720A10	**REC15-801**	167
84-813720A11	**REC15-601**	167
84-813720A13	**REC15-405**	167
84-813720A2	**REC15-804**	167
84-813720A3	**REC15-804**	167
84-813720A4	**REC15-804**	167
84-813720A5	**REC15-401**	167
84-813720A5	**REC15-402**	167
84-813720A7	**REC15-604**	167
84-813720A8	**MAG15-602**	167
84-813720A8	**REC15-801**	167
84-813720A9	**REC15-801**	167
84-816608A1	**REC15-815**	167-175-176
84-816761A15	**MAG15-803**	167
84-816761A15	**REC15-804**	167
84-816761A2	**MAG15-803**	167
84-816761A2	**REC15-804**	167
84-816761A4	**REC15-804**	167
84-816761Q13	**REC15-405**	173
84-816761Q16	**REC15-601**	173-174-176
84-816761Q17	**REC15-804**	173-174
84-816761Q7	**REC15-604**	167
84-816761Q8	**MAG15-602**	167
84-816781A15	**MAG15-803**	167
84-816781A15	**REC15-804**	167
84-816781A4	**REC15-804**	167
84-817376T01	**REC84-817376T01**	173
84-818781A4	**REC15-804**	167
84-863656A1	**REC15-813**	167-175
84-863656A2	**REC15-606**	175
842725A3	**REC8M0073435**	125
850484T	**REC3854331**	168
850484T2	**REC3854331**	168
8507522+10-31700	**REC8507522**	292
851956A1	**REC853998A1**	131
852956A1	**REC3858941**	130-149
853678T	**REC853678T**	144
853998A1	**REC853998A1**	131
853998T	**REC853998A1**	131
857006A3	**REC8M0064021**	154
85784A1	**REC85784A1**	142
85785-2	**REC805298A1**	142
85785A2	**REC85785A2**	142
85785T	**REC805298A1**	142
859210T	**REC881879T11**	147
859604A1	**REC881879T11**	147
86-865202T	**REC86-865202T**	158
860235A03	**REC860235A03**	222-243-252
860235A04	**HOT20956**	221
860246A10	**MAR246**	244
860246A15	**MAR246**	237-244
860246A3	**MAR246**	244
860246A9	**MAR246**	244
860256A4	**REC8M0061381**	178
860349A1	**REC860349A1**	129-150
861006A1	**REC8M0061381**	178
861126A1	**REC861126A1**	129-149-150
861155A2	**REC861155A3**	127
861155A3	**REC861155A3**	127
861155A5	**REC3858261**	127
861155A5	**REC861155A6**	127
861155A6	**REC3858261**	127
861155A6	**REC861155A6**	127
861156A03	**REC861156A03**	129
861156A04	**REC861156A04**	129
861156A1	**REC861156A1**	126
861249A1	**REC861249A1**	144
861260T	**REC9-33302**	131
861493A07	**BAMC29-47587**	177
861493A07	**BAMC29-60372**	180
861493A3	**BAMC29-47587**	177

OEM	REF	PAG.
861523A9	REC861523A9	303
861676A1	REC8M0073435	125
861676T09	REC8M0073435	125
861677T	REC861677T	124
862030T	REC862030T01	154
862030T01	REC862030T01	154
862031T	REC862031T1	153
862031T1	REC862031T1	153
862048A1	REC862048A1	124
862077A1	REC862077A1	124
862132T	REC862132T	277
86234A3	REC86234A4	124
86234A4	REC86234A4	124
862351T	REC862351T	187
86246A1	REC86246T	124
86246T	REC86246T	124
86247A2	REC86247T	124
86247T	REC86247T	124
862548A1	REC42419A1	156
863077T	REC863077T	154
86307AR01	REC863077T	154
863444T1	RM863444T1	179
863457A2	RM863457A2	178
863631T1	RM863631T1	179
863786A1	REC22-863786A1	234
863802T2	REC863802T2	179
864148A01	RM21325765	143
864244A2	REC864244A2	277
864281A01	REC864281A2	270
864281A2	REC864281A2	269-271
864282T	REC864282T	271
864297T01	REC864297T01	146
864308T01	MAR735	243
864309T01	MAR309	245
864309T02	MAR309	229-233-245-251
864309T02	SED3095400	229-233-247
864363A1	RM864363A1	292
864364A1	RM864364A1	292
864591T02	MAR591	229-233-245-251
864591T02	SED3095500	229-233
864612T01	MAR612	229-243-248-249-252
864625T	REC864625T	194
864650A05	REC8M0047215	128
864650A13	REC8M0047215	128
86481A2	REC864281A2	271
864856A1	REC3850396	144
864908A1	BAMC-20-864908A1	229-233-249
864929A3	HGE4929	229-233
864929A3	MAR929	248
865049T01	MAR735	243
865328A01	RM865328A01	293
865329A02	REC865329A02	292-304
865380A13	REC862548A1	156
865380A13	REC865380A13	155
865380A25	REC865380A13	155
865425A03	RM865425A03	277
865436A02	REC865436A02	292-300
865436A02	RM19543A10	292-300
865437A02	REC865437A02	292-300
865491A01	REC864281A2	271
865496A01	REC865496A02	277
865496A02	REC865496A02	271
865503T	REC865503T	271
865735A02	MAR735	233-243
865876A01	REC865876A01	283
866136A01	RM866136A01	277
866169A01	REC866169T01	126
866169T01	REC866169T01	126
866169Y01	REC866169T01	128
866170A01	REC866170A01	127-128
866171A01	REC35-866171A01	128
866200A01	REC806034A1	293-298
866322A01	RM866322A01	293-298
86754T	RM86754T	283
86779A1	REC86779A1	277
86840A05	CEF500509K	299
86840A05	REC86840A05	297-299
86840A3	CEF500509K	299
86840A3	REC86840A05	299
87-18286A43	REC87-18286A43	160
87-19674A1	REC87-19674A1	160
87-71831	REC71831	170
87-76416A1	REC3853839	157
87-805605A1	REC87-805605A1	147
87-808009A1	RM8M0052936	292
87-808009A2	REC87-808009A2	292
87-808009A3	RM8M0052936	292
87-814281A5	REC87-814281A5	292
87-815425T	REC8M0068784	147
87-858679T2	REC87-858679T2	160
87-859032T02	REC87-859032T02	160
87-864252	REC87-864252	147
87-864252A01	REC87-864252A01	147
87-892150Q02	REC87-892150Q02	174
87-8M0052935	REC87-808009A2	292
87-8M0052936	RM8M0052936	292
87-91941A8	REC87-91941A8	160
87114A19	MAR246	244
87290A26	REC87290A23	177
87290A4	REC87290A4	178
87399A2	REC87399A2	306
87399A2	REC87399A2	308
87399A3	REC87399A3	307
87581T	REC195141	176
879150A87	REC21622232	175-176
879194A01 & A02	REC30-879194A01	296
879194T46	REC879194T46	302
88-11178A01	BS2142	158
88-212619	BS5296	159
88-79023A91	RM88-79023A91	158
88-79023A94	BS5140	159
88-79023T10	REC88-79023T10	158
88-832969T05	AM603905	159
88-832969T10	AM603910	159
88-832969T15	AM603915	159
88-832969T20	AM603920	159
88-832969T30	AM603930	159
88-8M0129528	BS5185	159
88-8M0129530	BS5187	159
88-8M0129531	BS5189	159
88-8M0129533	BS5175	159
88-8M0129534	BS5177	159
88-8M0129535	BS5181	159
88-8M0129560	BS5182	159
88-8M0130941	BS5183	159
88-8M2011907	BS2138	158
88-93582	BS2143	158
881070T	REC8M0125617	144
88183A12	REC865380A13	155
88183A12	REC865380A25	155
881879A6	REC881879T11	147
881879T11	REC881879T11	147
88243A3	REC88243A3	279
88243A3	REC88243A3	281
88243A3	REC88243A3	283
882751A04	REC882751A04	158
882751A1	REC3854138	158
882751A2	REC3854138	158
883166A2	REC883166A2	156
884794A02	REC21622232	176
884794A1	REC21622232	176
8866A64	RM1656-8866A17	279
88751A02	REC40005334	175
888751A03	REC40005334	175
888751A1	REC40005334	175
8887562Q02	TENKITALPHAONE/1	263-267-287
888756Q01	CMALPHAKITA	289
888756Q01	CMALPHAKITM	289
888756Q01	TENKITALPHAONE/2	287
888756Q02	CMALPHAGEN1KITA	289
888756Q02	CMALPHAGEN1KITM	289
888756Q03	CMALPHAKITA	289
888756Q03	CMALPHAKITM	289
888756Q03	RECKITMALPHA2AL	2865
888756Q03	RECKITMALPHA2M	284-286
888756Q03	RECKITMALPHA2ZN	284-286
888756Q03	TENKITALPHAONE/2	287
888756Q04	RECKITMALPHA1AL	286
888756Q04	RECKITMALPHA1M	284-286
888756Q04	RECKITMALPHA1ZN	284-286
888758Q01	CMBRAVO1KITA	279-289
888758Q01	CMBRAVO1KITM	279-289
888758Q01	TENKITBRAVOI	279-287
888758Q02	RECKITMBRAVO1AL	286
888758Q02	RECKITMBRAVO1M	284-286
888758Q02	RECKITMBRAVO1ZN	284-286
888761Q01	CMBRAVO2Y3KITA	281-289
888761Q01	CMBRAVO2Y3KITM	281-289
888761Q01	TENKITBRAVOII-III	281-287
888761Q02	CMBRAVO3KITA	283-289
888761Q02	CMBRAVO3KITM	283-289
888761Q02	TENKITBRAVOIII-04	283-287
888761Q03	RECKITMBRAVO23AL	109-281-284-286
888761Q03	RECKITMBRAVO23M	284-286
888761Q03	RECKITMBRAVO23ZN	284-286
888761Q04	RECKITMBRAVO3AL	109-283-284-286
888761Q04	RECKITMBRAVO3M	284-286
888761Q04	RECKITMBRAVO3ZN	284-286
889514A01	REC8M0052939	292
89-18080	REC3853869	157
89-68258A4	REC852565	157
89-805188A1	REC89-818999A2	157
89-818864	REC89-96158T	157
89-818864T	REC89-96158T	157
89-818997A1	REC89-818997A1	157
89-818997T1	REC89-818997A1	157
89-818999A1	REC89-818999A2	157
89-818999A2	REC89-818999A2	157
89-853654A1	REC3853869	157
89-853654A1	REC852565	157
89-91975	REC89-96054T	157
89-96054	REC89-96054T	157
89-96054T	REC89-96054T	157
89-96158	REC89-96158T	157
89-96158T	REC89-96158T	157
89-99253	REC3853869	157
89011A8	MAR078	244
891736T	REC891736T	156
89690T	REC89690T	184
898253T22	REC898253T22	169-175
898253T23	REC898253T23	169-175
898253T24	REC1463-9382	162
898253T27	REC3854002	161-173
8M0020941	REC17-8M0084681	263-267-275
8M0029482	REC300-8M0044991	161
8M0030022	REC8M0082988	146
8M0032176	REC876037	158
8M0032834	REC8M0032834	265
8M0042641	REC8M0042641	265
8M0047215	REC8M0047215	128
8M0052939	REC8M0052939	292
8M0054588	REC3861985	161
8M0054726	REC8M0054726	144-150
8M0056956	CEF500167	188
8M0056956	REC15000K	188
8M0056956	SHE15000K	188
8M0057679	REC8M0133370	129
8M0057686	REC8M6002428	130
8M0057697	REC876037	158
8M0058164	REC8M0058164	125
8M0058389	REC22-67892A05	263-267-275-277-279
8M0061381	REC8M0061381	178
8M0062084	REC3854311	169
8M0062406	CEF500509K	299
8M0062406	REC86840A05	299
8M0062440	RM8M0062440	298
8M0062568	RM43881A14	291
8M0062770	REC8M0062770	126
8M0062770	REC8M0062770	128
8M0062771	REC8M0103289	127-128
8M0066646	REC8M0093480	181
8M0067062	TEN01320T	287
8M0067268	REC57-8M0093495	198
8M0067292	REC8M0093480	181
8M0067625	TEN01320T	287
8M0068784	REC8M0068784	147
8M0069803	REC802630T01	129
8M0073409	REC17-8M0073409	291
8M0073435	REC8M0073435	125
8M0077616	REC8M0077616	145
8M0080805	REC8M0080805	291-296-306-307-308
8M0082479	PREKM63706	301
8M0082480	PREKM63707	301
8M0082481	PREKM63708	301
8M0082482	PREKM63709	301
8M0082483	PREKM63710	301
8M0082484	PREKM63711	301
8M0082485	PREKM63712	301
8M0082486	PREKM63713	301
8M0082487	PREKM63714	301
8M0082488	PREKM63715	301
8M0082489	PREKM63716	301
8M0082490	PREKM63717	301
8M0082491	PREKM63718	301
8M0082492	PREKM63719	301
8M0082493	PREKM63720	301

OEM	REF	PAG.
8M0082494	**PREKM63721**	301
8M0082495	**PREKM63722**	301
8M0082496	**PREKM63723**	301
8M0082497	**PREKM63724**	301
8M0082529	**PRE53006**	301
8M0082530	**PRE53007**	301
8M0082531	**PRE53008**	301
8M0082532	**PRE53009**	301
8M0082533	**PRE53010**	301
8M0082534	**PRE53011**	301
8M0082535	**PRE53012**	301
8M0082536	**PRE53013**	301
8M0082537	**PRE53014**	301
8M0082538	**PRE53015**	301
8M0082539	**PRE53016**	301
8M0082540	**PRE53017**	301
8M0082541	**PRE53018**	301
8M0082542	**PRE53019**	301
8M0082543	**PRE53020**	301
8M0082544	**PRE53021**	301
8M0082545	**PRE53022**	301
8M0082546	**PRE53023**	301
8M0082547	**PRE53024**	301
8M0082577	**PRE3300C05**	301
8M0082578	**PRE3300C06**	301
8M0082579	**PRE3300C07**	301
8M0082580	**PRE3300C08**	301
8M0082581	**PRE3300C09**	301
8M0082582	**PRE3300C10**	301
8M0082583	**PRE3300C11**	301
8M0082584	**PRE3300C12**	301
8M0082585	**PRE3300C13**	301
8M0082586	**PRE3300C14**	301
8M0082587	**PRE3300C15**	301
8M0082588	**PRE3300C16**	301
8M0082589	**PRE3300C17**	301
8M0082590	**PRE3300C18**	301
8M0082591	**PRE3300C19**	301
8M0082592	**PRE3300C20**	301
8M0082593	**PRE3300C21**	301
8M0082594	**PRE3300C22**	301
8M0082595	**PRE3300C23**	301
8M0082596	**PRE3300C24**	301
8M0082597	**PRE3300C25**	301
8M0082598	**PRE3300C26**	301
8M0082599	**PRE3300C27**	301
8M0082600	**PRE3300C28**	301
8M0082601	**PRE3300C29**	301
8M0082602	**PRE3300C30**	301
8M0082603	**PRE3300C31**	301
8M0082604	**PRE3300C34**	301
8M0082605	**PRE3300C36**	301
8M0082606	**PRE3300C38**	301
8M0082988	**REC8M0082988**	146
8M0084523	**REC882571**	154
8M0084884	**REC25-8M0084884**	183
8M0087834	**REC8M0087834**	144
8M0089715	**REC8M0089715**	182
8M0091470	**REC8M0091470**	182
8M0092489	**REC8M0092849**	160
8M0093480	**REC8M0093480**	181
8M0093561	**REC8M0093561**	181
8M0094406	**REC879194401**	185
8M0095310	**REC8M0095310**	146
8M0095310	**REC8M0095310**	293
8M0095310	**REC8M0095310**	298
8M0095468	**REC8M0142695**	145-231
8M0095953	**REC8M0095953**	231
8M0098619	**REC8M0098619**	143
8M0111642	**REC8M0111642**	193
8M0113733	**REC46-8M0113733**	185
8M0113734	**REC46-8M0113734**	185
8M0113736	**REC46-8M0113736**	185
8M0115149	**RM807130A4**	231-250
8M0125617	**REC8M0125617**	144
8M0129714	**REC8M0155633**	186
8M0133370	**REC8M0133370**	129
8M0142542	**REC8M0142542**	148
8M0142695	**REC8M0142695**	145
8M0144930	**REC8M0144930**	160
8M0148530	**REC8M0148530**	186
8M0148530	**SHEP1016**	186
8M0148668	**REC8M0148668**	148-223
8M0150234	**TEN01320T**	287
8M0153706	**MP514516**	193
8M0153706	**REC8M0153706**	193
8M0155633	**REC8M0155633**	186
8M2000229	**REC10-53728**	231-234
8M2000819	**REC27-33395**	209-234
8M2003959	**REC8M2003959**	145
8M2003959	**REC8M2003959**	231-234
8M2004414	**REC8M2004414**	231-234-251
8M2011027	**REC8M2011027**	263-267-275-279
8M2015937	**REC8M2015937**	269-271
8M2015938	**REC8M2015938**	269-271
8M6000623	**REC8M6000623**	148
8M6000634	**REC8M6000634**	147
8M6000652	**REC8M6002428**	130
8M6001217	**REC8M6001217**	170
8M6001218	**REC33662**	170
8M6001219	**REC8M6001219**	170
8M6001222	**REC898253013**	169-175
8M6001224	**REC89825302**	169
8M6001249	**REC8M6001249**	170
8M6001250	**REC391-5090**	170
8M6001251	**REC58217**	169
8M6001252	**REC8M6001252**	169
8M6001253	**REC3854549**	169
8M6001253	**REC3854549**	173
8M6001254	**REC3854261**	169
8M6001254	**REC3854261**	173
8M6002428	**REC8M6002428**	130
8M6003194	**REC8M6003194**	145
8M6005225	**REC879194401**	185
8M6500024	**REC8M6500024**	193
90576A4	**REC13524A6**	169
90736A24	**REC90736A24**	177
90746A1	**REC805759Q01**	168
907964A1	**REC807964A1**	176
91-12037	**REC91-12037**	313
91-17256	**REC91-17256**	314
91-17257T	**REC90490**	314
91-17273	**RM91-17273**	313
91-17275A1	**REC91-31107T**	313
91-17275A1	**RM91-17275A1**	313
91-17302	**RM91-17302**	313
91-36569T	**REC91-36569T**	310
91-43579	**REC91-43579**	313
91-45497A1	**REC91-45497A1**	312
91-56048001	**REC91-56048001**	312
91-56775T	**REC91-56775T**	312
91-60523	**REC91-60523**	312
91-60526T	**REC91-60526T**	312
91-61077T	**REC91-61077T**	312
91-78310	**REC91-78310**	312
91-8053741	**REC90490**	314
91-805475A1	**REC91-805475A1**	312
91-818162	**REC91-818162**	312
91-888863	**REC91-888863**	173
91823A3	**REC17177A1**	175
92497A3	**REC78403A2**	153
93320A10	**REC93320A15**	237-248
93320A13	**MAR3320PAR**	227-237-239-248
93320A15	**REC93320A15**	248
93320A5	**MAR3320PAR**	248
93322A12	**HOT20985**	249
93322A12AV	**HOT20985**	227-237-239
94989A6	**RM94989A6**	291
94998A4	**REC94998A4**	259
95862A5	**BAMC-1-95862**	221-242
96705A1	**REC96705A1**	219-242
97-257	**REC806490T**	148
97-8M0151541	**TEN01320T**	287
97257A1	**REC806490T**	148
97258A1	**REC97258A1**	148
97399A2	**REC862048A1**	124
97432A2	**REC97432A2**	217-303
98-8M0121940	**REC98-8M0121940**	191
98230A1	**REC98230A1**	293-298
98504A3	**HOT20970**	227-237-239-246
98504A3	**REC98504A3**	23-239-2467
98562A6	**HOT20937**	224-242-246-251
98703A26	**REC98703A26**	308
98703A3	**REC98703A3**	306
98704A26	**REC98704A26**	308
98704A3	**REC98704A3**	306
99155T2	**REC99155T2**	182-224
99356A1	**RM99356A1**	184
99356A2	**REC99356A2**	184-253
99438A1	**RM99438A1**	183
99746A17	**HOT20952**	227-230-243
99746A17	**MAR746**	227-230-243
99746A3	**HOT20952**	243
99746A3	**MAR746**	243
99746A8	**HOT20952**	243
99746A8	**MAR746**	243
99798A18	**HOT20956**	242
F16900148	**REC982209**	168
FI69000083	**REC8M6001249**	170
FI6900023	**REC8M6001249**	170
FI6900031	**REC33662**	170
FI6900031	**REC8M6001219**	170
FI6900032	**REC8M6001249**	170
FI6900040	**REC8M6001217**	170
FI6900044	**REC834975**	169
FI6900152	**REC97258A1**	148
FI6900184	**REC835702**	168
FI6900185	**REC392-9766**	168
FI6900186	**REC3853801**	169
FI6900189	**REC8M6001249**	170
FI6900190	**REC3853801**	169
FI6900198	**REC97258A1**	148
FI6901224	**REC89825302**	169
GM10482803	**REC3858984**	162

GUÍA MANTENIMIENTO DE MOTORES 346
GUÍA MANTENIMIENTO DE MOTORES 349
GUÍA MANTENIMIENTO TRANSMISIONES 354
KITS MANTENIMIENTO COLAS 355
MATERIALES GENÉRICOS PARA REVISIÓN 353

SISTEMA ALIMENTACIÓN Y FILTRACION 356

ACEITE VOLVO 590
ACCESORIOS PARA FILTROS 371
BOMBA DE COMBUSTIBLE 372
- BOMBA DE ALTA PRESIÓN 374
- BOMBA DE BAJA PRESIÓN 375
- BOMBA MECÁNICA 372

CARBURADOR 379
- BOYAS 381
- GUÍA 383
- JUNTAS 380
- JUNTAS - KITS 381
- JUNTAS APAGALLAMAS 383
- KITS ADAPTADORES 380
- KITS TORNILLOS 379
- TUBO COMBUSTIBLE 380

FILTRO DE ACEITE 359
FILTRO DE COMBUSTIBLE Y ELEMENTOS 356
- BRACKET 356
- FILTRO DECANTADOR, VASO TRASPARENTE 357
- FILTRO GASOLINA 358
- FILTRO PARA CARBURADOR 358
- FILTRO SEPARADOR AGUA 356
- RACOR DE LATÓN 357

FILTRO DE ACEITE 366
FILTRO DE AIRE 365
FILTRO DE COMBUSTIBLE Y ELEMENTOS 360
- FILTRO CON CAZOLETA 362
- FILTRO DECANTADOR 363
- FILTRO TIPO SEPAR2000 365

FILTRO DE REFRIGERANTE 369
FILTRO DESVAPORIZADORES 369
INYECTORES 376
- ARANDELAS 378
- INYECTORES 376
- KITS 376
- KITS CAMISA 377
- RETENES Y TÓRICAS 377

MANGUERA CARBURANTE 370
RACORES 370
TURBO 383
- MANGUERA 386

SISTEMA ELÉCTRICO 387

ALTERNADORES 396
COMPRESOR 392
- EMBRAGUE COMPRESOR 392
- MÓDULO ELECTRÓNICO 392

MOTORES DE ARRANQUE 393
- DESCONECTADOR DE SEGURIDAD 395
- LLAVES DE ARRANQUE 396

SENSORES 387
- AGUA EN COMBUSTIBLE 391
- ÁRBOL DE LEVAS 388
- BOMBILLA PARA INSTRUMENTOS 392
- CIGÜEÑAL Y RPM 392
- IAC 387
- MAT/MAP 387
- PICADO 388
- POSICIÓN CIGÜEÑAL 388
- POTENCIÓMETRO MANDO 390
- PRESIÓN DE ACEITE 389
- RAIL DE PRESIÓN 390
- REGULADOR DE VOLTAJE 391
- TEMPERATURA DE AGUA / AIRE 390
- TEMPERATURA Y PRESIÓN ACEITE (ALARMA) 389
- TPS 387

SOLENOIDE, RELÉ Y FUSIBLES 405
- EXTENSOR DE SOLENOIDE PARA TERMINALES 406
- FUSIBLE ATM, ATC, MAXI 408
- FUSIBLE TÉRMICO MOTOR 408
- FUSIBLE TRIM 408
- SOLENOIDES 405
- SOLENOIDES ARRANQUE 406
- SOLENOIDES PARADA INYECTORA 405
- RELÉS 407
- RELÉ BOMBA GASOLINA ELÉCTRICA 407
- RELÉ CAJA FUSIBLES 406
- RELÉ PARADA EMERGENCIA 406
- RELÉ STARTER TRIM/TILT 406

TRIM 398
- CONVERTIDOR DE 3 A 2 CABLES 398
- DESPIECE 402
- DEPÓSITO 398
- HERRAMIENTA PARA TUERCA 401
- KIT REPARACIÓN 402
- LATIGUILLOS 404
- PISTÓN 401
- PULSADOR / INTERRUPTOR 399
- SENSOR 399
- TRIM COMPLETO 398
- TRIM HIDRÁULICO 398
- TRIM MECÁNICO 398
- TRIM SX 398
- TRIM / TILT 398
- TUBO CILINDRO 401

SISTEMA ENCENDIDO 409

BOBINAS 409
- ENCENDIDO 409

BUJÍAS 410
- CABLES ALTO RENDIMIENTO 412

DISTRIBUIDOR 412
- 6 CYL 412
- 4 CYL 413
- PRESTOLITE 414
- MALLORY 415
- 4 CYL DELCO 416
- V6 DELCO 416
- V6 GXI 417
- V8 DELCO 417
- V8 GXI 418
- V8 FORD 418
- DESPIECES 420
- DISTRIBUIDORES 418
- KITS DE CONVERSIÓN ELECTRÓNICO 419

MÓDULOS IGNICIÓN 410

SISTEMA DE REFRIGERACIÓN 422

BOMBA ASPIRACIÓN DE AGUA 439
- IMPULSORES 441
- IMPULSORES - GUÍA 442

BOMBA ASPIRACIÓN DE AGUA 443
- IMPULSORES 448
- IMPULSORES - GUÍA 449
- SISTEMAS IPS 447

BOMBA CIRCULACIÓN DE AGUA 433
- GUÍA 435
- JUNTAS 434

BOMBA CIRCULACIÓN DE AGUA 436
- ESTOPADA 437
- DESPIECE 437
- JUNTAS 438
- KITS REPARACIÓN 437
- RODAMIENTO 437
- RODETE CON EJE 438

BOMBA DE AGUA - COMPONENTES 450
- ANILLO TÓRICO TRASERO 452
- CENTRADORES BOMBA ASPIRACIÓN 452
- CIRCLIP 452
- COJINETE 451
- CONSOLA 450
- JUNTAS TAPA 452
- PASADOR EJE 450
- PESTAÑA DE SUJECCIÓN 451
- PIN CENTRADOR 450
- RETENES Y JUNTAS - KITS 453
- TAPA DEPÓSITO EXPANSIÓN 451
- TOPE 450
- TORNILLOS TAPA 451
- VÁLVULA DE VACÍO 450

CORREAS Y COMPONENTES 464
- GUÍA CORREAS 467
- GUÍA CORREAS 468
- GUÍA CORREAS SERPENTÍN Y TENSORES 466
- GUÍA CORREAS SERPENTÍN Y TENSORES 467
- KIT DISTRIBUCIÓN 464
- POLEA COMPRESOR ALTERNADOR 465
- POLEA RUPTURA 464
- PIÑÓN ÁRBOL DE LEVAS 464
- PIÑÓN CIGÜEÑAL 464
- RODILLO TENSOR 465
- TAPÓN SEGURIDAD TAPA DE CORREAS 464
- TENSOR CORREA ALTERNADOR 465
- TENSOR CORREA COMPRESOR 465
- TENSIÓMETRO DISTRIBUCIÓN 465

ENFRIADOR DE ACEITE 431
- CARCASA 431
- RETENES Y JUNTAS 433
- RETENES - KITS 431

ENFRIADOR DE AIRE 430
- JUNTAS 431

INTERCAMBIADOR DE CALOR 426
- FILTRO AGUA SALADA 430
- INTERCAMBIADOR DE AGUA 429
- INTERCOOLER 429
- JUNTAS 428
- KITS 426

KITS REPARACIÓN 454
MANGUITOS MOTOR 463
RETENES 457
- ADMISIÓN AIRE 461
- BOMBA 458
- COLECTOR ESCAPE 462
- CUERNO ESCAPE 462
- CUERPO TERMOSTATO 457
- DISTRIBUIDOR 458
- EJE 457
- ENFRIADOR 461
- INFERIOR DEL FILTRO 457
- INTERCAMBIADOR 461
- RETENES TUBOS REFRIGERACIÓN 459
- RETENES TUBOS REFRIGERACIÓN - KITS 459
- RETENES TUBOS REFRIGERACIÓN - KITS 460
- SISTEMA LUBRICACIÓN 462
- SISTEMA REFRIGERACIÓN 461
- TAPONES DRENAJE 462

TERMOSTATO 422
- CUERPOS 423
- JUNTAS 426
- RETÉN SOPORTE DOBLE TERMOSTATO 425
- TERMOSTATOS - KITS 423

PARTES DEL MOTOR 470

JUNTAS MOTOR 480
- ADMISIÓN 482
- CARTER 483
- CULATA 480
- ESCAPE 482
- PARTE INFERIOR - KITS 483
- PARTE SUPERIOR - KITS 480
- PORTARETÉN TRASERO CIGÜEÑAL 482
- TAPA BALANCINES 482
- TAPA DISTRIBUCIÓN 481

JUNTAS MOTOR 484
- CARTER 495
- CULATA 484
- ESCAPE 492
- PARTE INFERIOR - KITS 495
- PARTE SUPERIOR - KITS 487
- RETENES CIGÜEÑAL 498
- RETENES TAPA BALANCINES 492
- RETENES TAPA LATERAL BLOQUE 492
- TAPA BALANCINES 490
- TAPA DISTRIBUCIÓN 494
- TAPA TRASERA CIGÜEÑAL 495
- TURBO 493

JUNTAS PARA BASES GM Y FORD 470
PISTONES - KITS 499
- AROS 499
- BASE VOLVO 499
- COJINETES ÁRBOL DE LEVAS 501
- COJINETES BANCADA 500
- COJINETES BIELA 500

PISTONES - KITS 501
- AROS 502
- CAMISAS 502
- COJINETES BANCADA 503
- COJINETES BIELA 505
- GOMAS CAMISAS 501
- PISTONES 501

RETENES BOMBA DE ACEITE 506
VÁLVULAS 507
- RETENES 507
- RETENES 507

VOLVO

SISTEMA ESCAPE Y ADMISIÓN 508

COLECTOR ADMISIÓN 518
COLECTORES Y CODOS 520
- CODOS 522
- CUERNOS ESCAPE 522
- EXTENSOR DE ESCAPE 523
- KIT RISER 6" 523

COLECTORES Y CODOS 524
- ABRAZADDERA ESCAPE 525
- CODO ESCAPE INOX 526
- CODO ESCAPE - GUÍA 527
- KIT REPARACIÓN TUBO ESCAPE 528
- MANGUITO ESCAPE 528
- PIPA CONEXIÓN 526

COMPONENTES DE FIJACIÓN 508
- GUÍA COMPONENTES 509

DESPIECES COLECTORES Y CODOS 510
- AQ115A, B • BB115A, B, C • AQ130A, B, C, D 519
- AQ120B • AQ125A, B • AQ131A, B, C, D • AQ140A • BB140A • AQ145A, B • BB145A • AQ151A, B, C • 230A, B • 250A, B 510
- 3.0l GM 511
- 6L AQ 165 & 170 A, B, C 512
- V6 AQ 175 • AQ 205 • AQ430 A/B • 431 A/B • AQ 434 512
- V6 4.3L GM 262 CID 513
- AQ & BB 200, 205, 211, 231, 225, 260, 271, 290, 311, 500, 501, 570, 571, 572 GM 305/350 CID, 514
- V8 5.0/5.7L GM305 & GM 350 CID 515
- 5.0/5.8L & Fi/FSi FORD 302/351 CID V8 516
- V8 7.4/8.2 GM 454/502 CID 517

VÁLVULAS ADMISIÓN Y ESCAPE 518
- COMPONENTES 519

UNIDADES DE TRANSMISIÓN 529

MODELOS DE COLAS Y ACEITE 532
ACOPLAMIENTOS MOTOR 585
ÁNODOS 557
- ÁNODO CANADA METAL 565
- ÁNODO RECMAR 558
- ÁNODO TECNOSEAL 560

CAMBIO 584
DAMPER 585
DESPIECE COLAS 534
- IPS-A, B, C, D, E, F 534
- VELEROS 120, 130, 150, M525 535
- XDP 536
- DPH / DPR 538
- AQUAMATIC (SUPERIOR) 540
- SX (SUPERIOR) 542
- SX-A, FWD, DPS-A, DPS-B (SUPERIOR) 544
- DP-G, DPX-A (SUPERIOR) 545
- AQUAMATIC (INFERIOR) 546
- AQUAMATIC DP (INFERIOR) 547
- SX (INFERIOR) 548
- DP-S (INFERIOR) 549
- DP-SM (INFERIOR) 550
- DPS-A, DPS-B (INFERIOR) 552
- SX-A (INFERIOR) 553
- FWD (INFERIOR) 554
- AQUAMATIC (INTERMEDIA) 555
- DP-E, DP-G, DP-C, DP-D (INTERMEDIA) 556

PISTONES DIRECCIÓN Y COMPONENTES 529
- ACTUADOR 529
- BOMBA HIDRÁULICA 530
- CABLE CONTROL 33C 531
- CABLE RUDDER 531
- EXTRACTOR POLEA BOMBA DIRECCIÓN 530
- FUELLES 530
- KIT REPARACIÓN 530
- LATIGUILLOS DIRECCIÓN 529
- PISTONES 529
- POLEA PARA SERVO Y BOMBA 531

PRENSAESTOPAS - KIT 585
SOPORTE MOTOR 584
TRANSOM 577
- DP-S 577
- SX 578
- SX-A TSK 579

TRANSOM - COMPONENTES 580
- GOMAS 581
- FUELLES DE TRANSMISIÓN 582
- MANGUITOS DE COLA 583
- RODAMIENTOS EJE 581
- RODAMIENTOS Y RETENES - GUÍA 580

REPARACIÓN AQUAMATIC - COMPONENTES 568
REPARACIÓN SX - COMPONENTES 571
REPARACIÓN COLAS E INVERSORES - KITS 571
RETENES Y TÓRICAS 576

SISTEMA DE PROPULSIÓN 586

HÉLICES SOLAS 586
HÉLICES ORIGINALES VOLVO 588

REF --> RO 593
RO --> REF 605

EN

DRIVES MAINTENANCE KIT 355
GENERIC MATERIALS FOR REVISION 353
GUIDE: ENGINE MAINTENANCE 346
GUIDE: ENGINE MAINTENANCE 349
GUIDE: MAINTENANCE TRASMISSIONS 354

FUEL & FILTRATION SYSTEM 356

AIR FILTER 365
AIR FILTER CARTER 369
CARBURETOR 379
- ADAPTER KITS 380
- FLAME ARRESOTRS 383
- FLOATS 381
- FUEL TUBE 380
- GASKETS 380
- GASKETS - KITS 381
- GUIDE 383
- SCREW KITS 379

COOLANT FILTER 369
FILTERS - ACCESSORIES 371
FUEL FILTERS AND ELEMENTS 356
- BRACKET 356
- BRASS RACCORS 357
- CARBURETOR FUEL FILTER 358
- COMPLETE FUEL FILTER 357
- FUEL FILTER 358
- WATER SEPARATING FUEL FILTER 356

FUEL FILTERS AND ELEMENTS 360
- BOWLS FILTER 362
- COMPLETE FUEL FILTER 363
- FILTER TYPE SEPAR2000 365

FUEL PUMP 372
- HIGH PRESSURE 374
- LOW PRESSURE 375
- MECHANICAL 372

FUEL TUBE 370
INJEKTOR 376
- KITS 376
- SEALS & WHASERS 378
- SLEEVE KITS 377
- WASHERS 378

OIL FILTER 359
OIL FILTER 366
RACORS 370
TURBO 383
- TUBE 386

VOLVO OIL 590

ELECTRIC SYSTEM 387

ALTERNATORS 396
COMPRESSOR 392
- ELECTRONIC MODULE 392
- SOLENOID CLUTCH 392

STARTERS 393
- CUT OFF SWITCH 395
- START KEYS 396

SENSORS 387
- AIR / WATER TEMPERATURE 390
- BULB WATCH INSTRUMENTS 392
- CAMSHAFT 388
- COMPLETE TEMPERATURE & OIL PRESSURE WARNING KIT 389
- CONTROL POTENTIOMETER 390
- CRANKSHAFT 388
- CRANKSHAFT & RPM 392
- IAC 387
- KNOCK 388
- MAT/MAP 387
- OIL PRESSURE 389
- OIL PRESSURE WARNING 391
- TPS 387
- VOLTAGE REGULATOR 391
- WATER IN FUEL 391

SOLENOID, RELAY & FUSES 405
- FUSES - ATM, ATC, MAXI 408
- FUSES - IGNITION CIRCUIT BREAKER 408
- FUSES - TRIM 408
- RELAY 407
- RELAY - EMERGENCY STOP 407
- RELAY - FUSES BOX 406
- RELAY - FUEL ELECTRIC PUMP 407
- RELAY - TRIM/TILT STARTER 406
- SOLENOID 405
- SOLENOID EXTENSOR FOR TERMINALS 406
- SOLENOID - STARTER 406
- SOLENOID - STOP 405

TRIM 398
- 3 TO 2 WIRE WIRED CONVERTER 399
- CYLINDER TUBE 401
- HYDRAULIC MOTOR 398
- HOSES 404
- MECHANICAL MOTOR 399
- PARTS 402
- PISTON 401
- REPAIR KIT 402

RESERVOIR 399
SENSOR 400
SWITCH 400
SX 399
TOOL FOR END NUT 401
TRIM / TILT 399

IGNITION SYSTEM 409

COILS 409
IGNITION 409
DISTRIBUTOR 412
6 CYL 412
4 CYL 413
PRESTOLITE 414
MALLORY 415
4 CYL DELCO 416
V6 DELCO 416
V6 GXI 417
V8 DELCO 417
V8 GXI 418
V8 FORD 418
DISTRIBUTORS 418
ELECTRONIC CONVERSION KITS 419
PARTS 420
IGNITION MODULES 410
SPARK PLUG 410
HD SPARK PLUG WIRES SET 412

COOLING SYSTEM 422

AFTERCOOLER 430
GASKETS 431
BELTS & COMPONENTS 464
ALTERNATOR BELT TENSIONER D4/D6 465
COMPRESSOR BELT TENSIONER D4/D6 465
CRANKSHAFT GEAR 464
PLUG SAFETY COVER BELTS 464
RUPTURE PULLEY 464
SERPENTINE BELTS & TENSIONERS - GUIDE 466
SERPENTINE BELTS & TENSIONERS - GUIDE 467
TENSIONER 465
TENSIONES ROLLER 465
TIMING BELT KIT 464
V-BELTS - GUIDE 467
V-BELTS - GUIDE 468
HEAT EXCHANGER 426
GASKETS 428
INTERCOOLER 429
KITS 426
SEA WATER FILTER 430
WATER EXCHANGER 429
HOSES MOTOR 463
OIL COOLER 431
HOUSING 431
SEALS & GASKETS 433
SEALS - KITS 432
RAPAIR KITS 454
SEALS 457
AIR INTAKE 461
COOLER 461
COOLING SYSTEM 461
DISTRIBUTOR 458
DRAIN TAPS 462
ENGINE HOSE SEALS 459
ENGINE HOSE SEALS - KITS 459
ENGINE HOSE SEALS - KITS 460
EXCHANGER 461
EXHAUST MANIFOLD 462
EXHAUST TUBE 462
LOWER SEAL OLD WATER FILTER 457
LUBRICATION SYSTEM 462
PUMP 458
SHAFT 457
THERMOSTAT HOUSING 457
THERMOSTAT WATER TUBE 460
THERMOSTAT 422
DOUBLE THERMOSTAT SUPPORT GASKET 425
GASKETS 426
HOUSING 423
THERMOSTATS - KITS 423
WATER PUMP - BLOCK CIRCULATING 433
GASKETS 434
GUIDE 435
WATER PUMP - BLOCK CIRCULATING 436
BEARING 437
GASKETS 438
GUIDE 437
IMPELLER & SHAFT 438
REPAIR KIT 437
WATER PUMP - COMPONENTS 450
BACK O-RING 452
BEARING 451
CONSOLE 450
CIRCLIP 452
EXPANSION DEPOSIT COVER 451
GASKETS - KITS 453
GASKETS- PUMP COVER 452
IMPELLER GASKET COVER 452
LOOKING PING 450
MOUNTING CLAMP FOR BALL BEARING 451
PIN 450
SCREW PUMP COVER 451
STOP 450
VACUUM VALVE 450
WATER PUMP CROSS PIECES 452
WATER PUMP - RAW MARINE 439
IMPELLERS 441
IMPELLERS - GUIDE 442
WATER PUMP - RAW MARINE 443
IMPELLERS 448
IMPELLERS - GUIDE 449
IPS SYSTEM 447

ENGINE PARTS 470

ENGINE GASKETS 480
CONVERSION GASKET KIT 483
CRANKSHAFT REAR SEAL GASKET 482
CYLINDER HEAD 480
EXHAUST GASKET 482
GASKET HEAD - KITS 480
INTAKE 482
OIL PAN 483
TIMING COVER 481
VALVE COVER 482
ENGINE GASKETS 484
OIL PAN 495
CONVERSION GASKET KIT 495
CRANKSHAFT 498
CYLINDER HEAD 484
EXHAUST 492
GASKET HEAD - KITS 487
REAR CRANKSHAFT COVER GASKET 495
SIDE COVER BLOCK 492
TIMING COVER 494
TURBO 493
VALVE COVER 490
VALVE COVER SEALS 492
GASKETS TO GM & FORD ENGINES 470
OIL PUMP SEALS 506
PISTONS - KITS 499
BEARING KITS FOR CAMSHAFT 500
CONNECTING ROD BEARING KITS 500
MAIN BEARING KITS 500
RING SET 499
VOLVO BASE 499
PISTONS - KITS 501
CONNECTING ROD BEARING KITS 505
CYLINDER LINER 502
CYLINDER LINER KITS 501
MAIN BEARING KITS 503
PISTONS 501
RING SET 502
VALVES 507

EXHAUST & INTAKE SYSTEM 508

INTAKE & EXHAUST VALVES 518
COMPONENTS 519
INTAKE MANIFOLD 518
FIXING COMPONENTS 508
GUIDE 509
MANIFOLDS & ELBOWS 520
ELBOWS 522
EXHAUST TUBO SX 522
EXHAUST EXTENSOR 523
RISER 6" 523
MANIFOLDS & ELBOWS 524
CONNECTOR FOR ELBOW 526
EXHAUST BELLOW KIT 524
EXHAUST CLAMP 525
EXHAUST ELBOW - 316 SS 526
EXHAUST ELBOW - GUIDE 527
EXHAUST HOSE 528
EXHAUST HOSE - REPAIR KIT 528
PARTS - MANIFOLDS & ELBOW 510
AQ115A, B • BB115A, B, C • AQ130A, B, C, D 519
AQ120B • AQ125A, B • AQ131A, B, C, D • AQ140A • BB140A • AQ145A, B • BB145A • AQ151A, B, C • 230A, B • 250A, B 510
3.0l GM 511
6L AQ 165 & 170 A, B, C 512
V6 AQ 175 • AQ 205 • AQ430 A/B • 431 A/B • AQ 434 512
V6 4.3L GM 262 CID 513
AQ & BB 200, 205, 211, 231, 225, 260, 271, 290, 311, 500, 501, 570, 571, 572 GM 305/350 CID, 514
V8 5.0/5.7L GM305 & GM 350 CID 515
5.0/5.8L & Fi/FSi FORD 302/351 CID V8 516
V8 7.4/8.2 GM 454/502 CID 517

TRANSMISSION UNIT 586

STERNDRIVES MODELS AND OILS 532
ANODES 557
CANADA METAL 565
RECMAR 558
TECNOSEAL 560
BELLOWS 582
DRIVE BELLOW 583
DRIVE HOSE 583
DAMPER 585
ENGINE COUPLER ASSEMBLIES 585
ENGINE MOUNT SCREW 584
GEARCASES PARTS 534
IPS-A, B, C, D, E, F 534
SAILBOAT 120, 130, 150, M525 535
XDP 536
DPH / DPR 538
AQUAMATIC (UPPER HOUSING) 540
SX (UPPER HOUSING) 542
SX-A, FWD, DPS-A, DPS-B (UPPER HOUSING) 544
DP-G, DPX-A (UPPER HOUSING) 545
AQUAMATIC (LOWER HOUSING) 546
AQUAMATIC DP (LOWER HOUSING) 547
SX (LOWER HOUSING) 548
DP-S (LOWER HOUSING) 549
DP-SM (LOWER HOUSING) 550
DPS-A, DPS-B (LOWER HOUSING) 552
SX-A (LOWER HOUSING) 553
FWD (LOWER HOUSING) 554
AQUAMATIC (INTERMEDIATE HOUSING) 555
DP-E, DP-G, DP-C, DP-D (INTERMEDIATE HOUSING) 556
REPAIR KIT COMPONENTS - AQUAMATIC 568
REPAIR KIT COMPONENTS - SX COBRA 571
REPAIR KIT - STERN DRIVES & INVERTERS 571
RUBBER SEAL - KIT 585
SEALS & RUBBER O-RINGS 576
TRANSOM 577
DP-S 577
SX 578
SX-A TSK 579
TRANSOM - COMPONENTS 580
SEALING STRIPS 581
SHAFT BELL SEAL 581
SHAFT CLIP 581
SHAFT BEARING 581
RUBBER RING 581
RUBBER LOCK- IPS 581
SHIFT 584
STEERING PISTONS & COMPONENTS 529
ACTUATOR 529
HYDRAULIC STEERING PUMP 530
BELLOWS 530
CABLE - CONTROL 33C 531
CABLE - RUDDER 531
HYDRAULIC HOSES 529
PISTON REPAIR KIT 530
PULLEY FOR SERVO PUMP 531
PULLEY REMOVER 530

PROPULSION SYSTEM 586

PROPELLERS - SOLAS 586
ORIGINAL PROPELLER - VOLVO 588

REF --> RO 593
RO --> REF 605

GUIDA MANUTENZIONE MOTORI 346
GUIDA MANUTENZIONE MOTORI 349
GUIDA MANUTENZIONE TRASMISSIONI 354
KIT MANUTENZIONE PIEDE 355
MATERIALE GENERICO PER LA REVISIONE 353

SISTEMA DI ALIMENTAZIONE E FILTRAZIONE 356

ACCESSORI PER FILTRI 371
CARBURATORE 379
- GALLEGGIANTI 381
- GUARNIZIONE 380
- GUARNIZIONE - KITS 381
- GUARNIZIONE - PARAFIAMMA 383
- GUIDA 383
- KIT ADATTATORE 380
- TUBO COMBUSTIBILE 380

FILTRO ARIA 365
FILTRI BENZINA E ELEMENTI 356
- FILTRO BENZINA 356
- FILTRO CARBURATORE 358
- FILTRO DECANTATORE 357
- FILTRO SEPARATORE ACQUA-BENZINA 356
- RACCORDI IN OTTONE 357
- SUPPORTO 356

FILTRO DIESEL E ELEMENTI 360
- FILTRO CON COPPA 362
- FILTRO DECANTATORE 363
- FILTRO DI TIPO SEPAR2000 365

FILTRO OLIO 359
FILTRO OLIO 365
FILTRO RAFFREDDAMENTO 369
FILTRO SFIATO BENZINA 369
INIETTORE 376
- INIETTORE 376
- KIT CAMICIA 377
- RONDELLA 378
- TENUTE E PARAOLIO 377

OLIO VOLVO 590
POMPA COMBUSTIBILE 372
- POMPA ALTA PRESSIONE 374
- POMPA BASSA PRESIONE 375
- POMPA MECCANICA 372

RACCORDI 370
TUBO DI CARBURANTE 370
TURBINA 383
- TUBO 386

SISTEMA ELETTRICO 387

ALTERNATORI 396
COMPRESSORE 392
- FRIZIONE COMPRESSORE 392
- MODULO ELETTRONICO 392

MOTORINI AVVIAMENTO 393
- CHIAVE DI AVVIAMENTO 396
- SCONETTATORE DI SICUREZZA 395

SENSORE 387
- ALBERO MOTORE 388
- ALBERO MOTORE E RPM 392
- AQUA NEL COMBUSTIBILE 391
- ASSE A CAMME 388
- CADUTA 388
- IAC 387
- LAMPADINA OROLOGIO STRUMENTI 392
- MAT/MAP 387
- POTENZIOMETRO DI CONTROLLO 390
- PRESIONE OLIO 389
- REGOLATORI DI VOLTAGGIO 391
- TEMPERATURA AQUA / ARIA 390
- TEMPERATURA E PRESSIONE DELL'OLIO CON ALARME 389
- TPS 387

SOLENOIDI, RELÉ E FUSIBILE 405
- FUSIBILE ATM, ATC, MAXI 408
- FUSIBILE TERMICO MOTORE 408
- FUSIBILE TRIM 408
- PROLUNGA TERMINALE PER SOLENOIDE 406
- SOLENOIDI 405
- SOLENOIDI AVVIAMENTO 406
- SOLENOIDI STOP 405
- RELÉS 407
- RELÉ BOMBA GASOLINA ELÉCTRICA 407
- RELÉ DELLA SCATOLA FUSIBILE 406
- RELÉ ARRESTO DI EMERGENZA 407
- RELÉ TRIM/TILT AVVIAMENTO 406

TRIM 398
- CONVERTITORE CAVI DA 3 A 2 FILI 399
- ESPLOSO 402
- INTERRUTTORE 400
- KIT RIPARAZIONE 402
- PISTONE 401
- SENSORE 400
- STRUMENTO PER DADO 401
- TUBI 404
- TUBO CILINDRO 401
- TRIM COMPLETO 398
- TRIM IDRAULICO 398
- TRIM MECANICO 399
- TRIM SX 399
- TRIM / TILT 399
- VASCHETTA 399

SISTEMA ACCENSIONE 409

BOBINA 409
- ACCENSIONE 409

CANDELE 410
- CAVI CANDELE ALTE PRESTAZIONI 410

DISTRIBUIDOR 412
- 6 CYL 412
- 4 CYL 413
- PRESTOLITE 414
- MALLORY 415
- 4 CYL DELCO 416
- V6 DELCO 416
- V6 GXI 417
- V8 DELCO 417
- V8 GXI 418
- V8 FORD 418
- ESPLOSO 418
- KIT DI CONVERSIONE ELETTRICO 419
- SPINTEROGENO 418

MODULI AVVIAMENTO 410

SISTEMA DI RAFFREDDAMENTO 422

CINGHIA E COMPONENTI 464
- GUIDA CINGHIA MOTORE 467
- GUIDA CINGHIA MOTORE 468
- GUIDA CINGHIA SERPENTINA E TENDICINGHIA 466
- GUIDA CINGHIA SERPENTINA E TENDICINGHIA 467
- KIT DISTRIBUZIONE 464
- PIGNONE ALBERO A CAMME 464
- PIGNONE ALBERO MOTORE 464
- PULEGGIA 464
- PULEGGIA ALTERNATORE 465
- TAPPO SICUREZZA COPERCHIO CINGHIE 464
- TENDICINGHIA 465
- TENDICINGHIA ALTERNATORE 465
- TENDICINGHIA COMPRESSORE 465
- TENDICINGHIA DISTRIBUZIONE 465
- CINGHIA DISTRIBUZIONE 464

KIT RIPARAZIONE 454
MANICOTTO MOTOR 463
PARAOLIO 457
- ASPIRAZIONE ARIA 461
- ASSE 457
- COLLETTORE SCARICO 462
- CORNA SCARICO 462
- CORPO TERMOSTATO 457
- DISTRIBUTORE 458
- GOMMINI TUBI DI REFRIGERAZIONE 459
- GOMMINI TUBI DI REFRIGERAZIONE - KITS 459
- GOMMINI TUBI DI REFRIGERAZIONE - KITS 460
- INFERIORE FILTRO 457
- POMPA 458
- RAFFREDDATORE 461
- RUBINETTI 462
- SCAMBIATORE 461
- SISTEMA LUBRIFICAZIONE 462
- SISTEMA RAFFREDAMENTO 461

POMPE ASPIRAZIONE ACQUA MARINA 439
- GIRANTE 441
- GIRANTE - GUIDA 442

POMPE ASPIRAZIONE ACQUA MARINA 443
- GIRANTE 448
- GIRANTE - GUIDA 449
- SISTEMA IPS 447

POMPE ACQUA RICIRCOLO DI BLOCCO 433
- GUIDE 435
- GUARNIZIONE 434

POMPE ACQUA RICIRCOLO DI BLOCCO 436
- GUARNIZIONE 439
- KIT REPARAZIONE 438
- CUSCINETTO 437
- GIRANTE POMPA 438

POMPE ACQUA - COMPONENTI 450
- ALETTA ARRESTO POMPA 450
- CENTRATORI POMPA ASPIRAZIONE 452
- CIRCLIP 452
- COPERCHIO DEPOSITO ESPANSIONE 451
- CUSCINETTO 451
- FASCIA TONDA 452
- GUARNIZIONE COPPERCHIO GIRANTE 452
- PARAOLIO E GUARNIZIONE - KITS 453
- PIASTRA DI SUPPORTO 451
- PIN CENTRATORE 450
- SPINOTTO 450
- TIRANTE 450
- VALVOLA DI VUOTO 450
- VITI COPERCHIO 451

REFRIGERATORE ARIA 430
- GUARNIZIONE 431

SCAMBIATORE DI CALORE 426
- FILTRO AQUA SALATA 430
- GUARNIZIONE 428
- INTERCOOLER 429
- KIT 426
- SCAMBIATORE ACQUA 429

SCAMBIATORE OLIO 431
- CARCASSA 431
- PARAOLIO E O-RING 433
- PARAOLIO - KIT 432

TERMOSTATO 422
- CORPO 423
- GUARNIZIONE 426
- PARAOLIO SUPPORTO, TERMOSTATO DOPPIO 425
- TERMOSTATO - KIT 423

PARTI MOTORE 470

GUARNIZIONE MOTORE 480
- ASPIRAZIONE 482
- COPERCHIO DISTRIBUZIONE 481
- COPPA DELL'OLIO 483
- PARTE ALTA - KIT 480
- PARTE BASSA - KIT 483
- PARAOLIO POSTERIORE ALBERO MOTORE 482
- SCARICO 482
- TESTATA 480

GUARNIZIONE MOTORE 484
- CARTER DISTRIBUZIONE 494
- COPERCHIO POSTERIORE ALBERO MOTORE 495
- COPERCHIO PUNTERIE 490
- COPPA DELL'OLIO 495
- PARAOLIO COPERCHIO PUNTERIE 492
- PARTE ALTA - KIT 487
- PARTE BASSA - KIT 495
- COPERCHIO LATERALE BLOCCO 492
- COLLETTORE E GOMITO SCARICO 492
- TESTATA 484
- TURBINE 493

GUARNIZIONE MOTORI GM E FORD 470
PARAOLIO ALBERO MOTORE 498
PARAOLIO POMPKA L'OLIO 506
PISTONE - KIT 499
- BASE VOLVO 499
- BRONZINE ASSE A CAME 501
- BRONZINE DI BANCO 500
- BRONZINE DI BIELLA 500
- FASCE 499

PISTONE - KIT 501
- BRONZINE DI BANCO 503
- BRONZINE DI BIELLA 505
- CAMICIA 502
- FASCE 502

VALVOLE 507

SISTEMA DI ESCARICO E ASPIRAZIONE 508

COMPONENTI DI FISSAGIO 508
- GUIDA COMPONENTI 509

COLLETTORE ASPIRAZIONE 518

COLLETTORI E GOMITI 520
CORNA DI SCARICO 522
GOMITI 522
PROLUNGA SCARICO 523
RISER 6" 523
COLLETTORI E GOMITI 524
FASCETTA SCARICO 525
GOMITO DI SCARICO INOX 526
GOMITO DI SCARICO - GUIDA 527
INNIESTI PER GOMITI 526
KIT RIPARAZIONE SCARICO 528
MANICOTTO SCARICO 528
PARTI COLLETTORI E GOMITI 510
AQ115A, B • BB115A, B, C • AQ130A, B, C, D 519
AQ120B • AQ125A, B • AQ131A, B, C, D • AQ140A • BB140A • AQ145A, B • BB145A • AQ151A, B, C • 230A, B • 250A, B 510
3.0l GM 511
6L AQ 165 & 170 A, B, C 512
V6 AQ 175 • AQ 205 • AQ430 A/B • 431 A/B • AQ 434 512
V6 4.3L GM 262 CID 513
AQ & BB 200, 205, 211, 231, 225, 260, 271, 290, 311, 500, 501, 570, 571, 572 GM 305/350 CID, 514
V8 5.0/5.7L GM305 & GM 350 CID 515
5.0/5.8L & Fi/FSi FORD 302/351 CID V8 516
V8 7.4/8.2 GM 454/502 CID 517
VALVOLA ASPIRAZIONE E SCARICO 518
COMPONENTI 519

UNITÀ DI TRASMISSIONE 529

MODELLI PIEDE 532
ACCOPPIAMENTO MOTORE 585
ANODI 557
ANODI CANADA METAL 565
ANODI RECMAR 558
ANODI TECNOSEAL 560
CAMBIO 584
PARAOLI E FASCIE TONDE 576
DAMPER 585
PISTONI IDRAULICI E COMPONENTI 529
ATTUATORE 529
CAVI RUDDER 531
CAVI STERZO 33C 531
KIT RIPARAZIONE PISTONE 530
CUFFIE 530
POMPA IDRAULICA 530
SERVO POMPA 530
PULEGGIA PER SERVO POMPA 531
RIMOZIONE PULEGGIA 530
TUBI STERZO 529
PREMISTOPPA - KIT 585
RIPARAZIONE AQUAMATIC - COMPONENTI 568
RIPARAZIONE SX COBRA - COMPONENTI 571
RIPARAZIONE PIEDI E INVERTITORI - KITS 571
GOMMA PASSASCAFO 576
SPLOSO PIEDI 534
IPS-A, B, C, D, E, F 534
VELA 120, 130, 150, M525 535
XDP 536
DPH / DPR 538
AQUAMATIC (SUPERIORE) 540
SX (SUPERIORE) 542
SX-A, FWD, DPS-A, DPS-B (SUPERIORE) 544
DP-G, DPX-A (SUPERIORE) 545
AQUAMATIC (INFERIORE) 546
AQUAMATIC DP (INFERIORE) 547
SX (INFERIORE) 548
DP-S (INFERIORE) 549
DP-SM (INFERIORE) 550
DPS-A, DPS-B (INFERIORE) 552
SX-A (INFERIORE) 553
FWD (INFERIORE) 554
AQUAMATIC (INTERMEDIA) 555
DP-E, DP-G, DP-C, DP-D (INTERMEDIA) 556
SUPPORTE MOTORE 584
TRANSOM 577
DP-S 577
SX 578
SX-A TSK 579
TRANSOM - COMPONENTI 580
CUFFIE 582
CUFFIE CARDANO 583
CUSCINETTO ASSE 581
GOMMA 581
MANICOTTO PIEDE 583

SISTEMA DI PROPULSIONE 586

ELICHE - SOLAS 586
ELICHE - ORIGINALI VOLVO 588

REF --> RO 592
RO --> REF 605

FR

GUIDE MAINTENANCE MOTEURS 346
GUIDE MAINTENANCE MOTEURS 349
GUIDE MAINTENANCE TRANSMISSIONS 354
KIT D'ENTRETIEN DES EMBASSES 355
MATERIALES GENÉRICOS PARA REVISIÓN 353

SYSTÈME D'ALIMENTATION ET FILTRATION 356

ACCESSORIOE POUR FILTRES 371
CARBURATEUR 379
FLOTEURS 381
GUIDE 383
JOINTS 380
JOINTS - KITS 381
JOINTS ARRÊTEURS DE FLAMMES 383
KITS ADAPTATEURS 380
KITS VIS 379
TUYAU CARBURANT 380
FILTRE À HUILE 359
FILTRE À HUILE 366
FILTRE AIR 365
FILTRE ET CARTOUCHES DE RECHANGE 356
BRACKET 356
FILTRE À ESSENCE 356
FILTRE À ESSENCE CARBURATEUR 358
FILTRE DÉCANTATEUR 357
RACCORDS À LAITON 357
FILTRE ET CARTOUCHES DE RECHANGE 360
FILTRE AVEC COUPE 362
FILTRE DÉCANTATEUR 363
FILTRE TYPE SEPAR2000 365
FILTRE REFRIGERANT 369
FILTRE RENIFLARD 369
HUILE VOLVO 590
INJECTEUR 376
JOINTS ET KITS 376
KITS FOURREAU D'INJECTEUR 377
RONDELLE 378
POMPE À CARBURANT 372
POMPE BASE PRESSION 375
JOINT 375
POMPE HAUTE PRESSION 374
POMPE MECANIQUE 372
TUYAU DE CARBURANT 370
TURBO 383
DURITE 386
RACCORDS 370

SYSTÈME ÉLÉCTRIQUE 387

ALTERNATEURS 396
CAPTEURS 387
AMPOULE ROUGE 392
CLIQUETIS 388
IAC 387
MAT/MAP 387
POSITION ARBRE À CAMMES 388
POTENTIOMÉTRE 390
PRESENCE D'EAU 391
PRESSION D'HUILE 389
REGULATEUR 391
TEMPERATURE DE L'AIRE / DE L'EAU 390
TEMP. ET PRESSION D'HUILE AVEC ALARME 389
TPS 387
VILEBREQUIN 388
VILEBREQUIN ET RPM 392
COMPRESSEUR 392
EMBRAYAGE DE COMPRESSEUR 392
MODULE ÉLECTRONIQUE 392
DÉMARREUR 393
CONTACTEUR DE DÉMARRAGE 396
COUPE CIRCUIT DE SÉCURITÉ 395
SOLÉNOÏDE, RELAIS ET FUSIBLES 405
PROLONGATEUR POUR SOLÉNOÏDE 406
FUSIBLE ATM, ATC, MAXI 408
FUSIBLE TÉRMIQUE MOTEUR 498
FUSIBLE TRIM 408
SOLÉNOÏDE 405
SOLÉNOÏDE DÉMARREUR 406
SOLÉNOÏDE DU STOP 405
RELAIS 406
RELAIS DE DÉMARREUR TRIM/TILT 406
RELAIS DE POMPE À ESSENCE 407
RELAIS DU STOP 407
RELAIS FUSIBLES 408
TRIM 398
BOUTON-POUSSOIR 400
CLÉ POUR ÉCROU DE VERIN 401
COMPOSANTS 402
FAISCEAU CONVERTISSEUR 3 À 2 FILS 399
FLEXIBLES 404
INTERRUPTEUR 400
KIT REPARATION VERIN 402
RESERVOIR 399
SONDE 400
TRIM COMPLET 398
TRIM HYDRAULIQUE 398
TRIM MÉCANIQUE 399
TRIM SX 399
TRIM / TILT 399
TUBE VERIN 401
VERIN 401

SYSTÈME D'ALLUMAGE 409

BOBINE 409
BOUGIES 410
KIT FAISCEAU DE BOUGIE 410
DISTRIBUTEUR 412
6 CYL 412
4 CYL 413
PRESTOLITE 414
MALLORY 415
4 CYL DELCO 416
V6 DELCO 416
V6 GXI 417
V8 DELCO 417
V8 GXI 418
V8 FORD 418
ALLUMEUR 418
KITS DE CONVERSION ÉLECTRONIQUE 419
PIÈCES 420
MODULES D'ALLUMAGE 410

SYSTÈME DE REFROIDISSEMENT 422

BAGUE 457
ADMISSION D'AIR 461
BOUCHONS DE VIDANGE 462
COLLECTEUR D'ÉCHAPPEMENT 462
CORNE D'ÉCHAPPEMENT 462
CORPS DE THERMOSTAT 457
DISTRIBUTEUR 458
ÉCHANGEUR 461
INFÉRIEUR DU FILTRE 457
JOINTS TUYAUX DE REFFROIDISSEMENT 459
JOINTS TUYAUX DE REFFROIDISSEMENT - KITS 459
JOINTS TUYAUX DE REFFROIDISSEMENT - KITS 460
POMPA 458
REFFROIDISSEUR 461
SYSTÈME DE LUBRIFICATION 462
SYSTÈME DE REFFROIDISEMENT 461
TUYAU D'EAU THERMOSTAT 460
COURROIES ET COMPOSANTS 464
BOUCHON D'ÉTANCHÉITÉ 464
GALET TENDEUR 465
GUIDE DE COURROIES MOTEUR 467
GUIDE DE COURROIES MOTEUR 468
GUIDE DE COURROIES SERPENTINE 466
GUIDE DE COURROIES SERPENTINE 467
KIT DISTRIBUTION 464
PIGNON D'ARBRE À CAME 464
PIGNON DE VILEBREQUIN 464
POULIE 465
POULIE DU COMPRESSEUR ALTERNATEUR 465
TENDEUR 465
TENDEUR DE COURROIE D'ALTERNATEUR 465
TENDEUR DE COURROIE DE COMPRESSEUR 465
DURITE MOTEUR 463
ÉCHANGEUR DE CHALEUR 426
ÉCHANGEUR D'EAU 429
FILTRE EAU DE MER 430
INTERCOOLER 429
JOINTS 428
KITS 426
KITS RÉPARATION 454
POMPE À EAU DE MER 439
TURBINES 441
TURBINES - GUIDE 442
POMPE À EAU DE MER 443
TURBINES 448
TURBINES - GUIDE 449
SYSTÈMES IPS 447
POMPE DE BRASSAGE 433
GUIDE 435
JOINTS 434
POMPE DE BRASSAGE 436
JOINTS 437
KITS 437
ROULEMENT 437
TURBINE 438
POMPE D'EAU - COMPOSANTS 450
BOUCHON DE VASE D'EXPANSION 451
BUTÉE 450
BRIDE DE POMPE 451
CIRCLIP 452
CLAVETTE 450
JOINT DE COUVERCLE DE TURBINE 454
JOINT TORIQUE ARRIÈRE 452
JOINTS - KITS 453
PIN DE CENTRAGE 450
ROULEMENT 451
SUPPORT DE POMPE 450
TOC D'ENTRAINEMENT DE POMPE 452
VANNE À CACUUM 450
VIS DE COUVERCLE 451
REFROIDISSEUR D'AIR 430
JOINTS 431
REFROIDISSEUR D'HUILE 431
CARTER 431
JOINTS SPI ET TORIQUES 433
JOINTS - KITS 432
THERMOSTAT 422
CORPS 423
JOINTS 426
JOINTS DU SUPPORT DOUBLE THERMOSTAT 425
THERMOSTAT - KITS 423

PIÈCES MOTEUR 470

JOINTS DE POMPE À HUILE 506
JOINTS POUR MOTEUR 480
ADMISSION 482
CARTER 483
CULASSE 480
ÉCHAPPEMENT 483
JOINT ARRIÈRE DE VILEBREQUIN 482
JOINT CARTER DE DISTRIBUTION 481
JOINT DE CACHE CULBUTEUR 482
POCHETE BASSE 483
POCHETE HAUTE 480
JOINTS POUR MOTEUR 484
CACHE CULBUTEUR 490
CARTER D'HUILE 495
CARTER 494
COUVERCLE ARRIÈRE DE VILEBREQUIN 495
COUVERBLE LATERAL DU BLOC 492
CULASSE 484
JOINT SPI DE CACHE CULBUTEUR 492
POCHETE BASSE 495
POCHETE HAUTE 487
TURBO 493
VILEBREQUIN 498
JOINTS POUR MOTEUR GM ET FORD 470
PISTONS - KITS 499
BASE VOLVO 499
COUSSINETS D'ARBRE À CAMMES 501
COUSSINETS DE VILEBREQUIN 500
COUSSINETS DE BIELLE 502
SEGMENTS 499
PISTONS - KITS 501
CHEMISE 502
COUSSINETS DE VILEBREQUIN 503
COUSSINETS DE BIELLE 505
JOINTS DE CHEMISE 501
PISTONS 501
SEGMENTS 502
SOUPAPES 507

SYSTÈME ÉCHAPPEMENT ET ADMISSION 508

COLLECTEUR ADMISSION 518
COLLECTEURS ET COUDES 520
COUDES 522
CORNES D'ÉCHAPPEMENT 522
KIT REHAUSSE 6" 523
COLLECTEURS ET COUDES 524
DURITE D'ÉCHAPPEMENT 528
COLLIER D'ÉCHAPPEMENT 525
COUDE D'ÉCHAPPEMENT - INOX 526
COUDE D'ÉCHAPPEMENT - GUIDE 527
KIT REPARATION POUR CORNE D'ÉCHAPPEMENT 528
COMPOSANTS DE FIXATION 508
GUIDE 509
PIÈCES COLLECTEURS ET COUDES 510
AQ115A, B • BB115A, B, C • AQ130A, B, C, D 519
AQ120B • AQ125A, B • AQ131A, B, C, D • AQ140A • BB140A • AQ145A, B • BB145A • AQ151A, B, C • 230A, B • 250A, B 510
3.0I GM 511
6L AQ 165 & 170 A, B, C 512
V6 AQ 175 • AQ 205 • AQ430 A/B • 431 A/B • AQ 434 512
V6 4.3L GM 262 CID 513
AQ & BB 200, 205, 211, 231, 225, 260, 271, 290, 311, 500, 501, 570, 571, 572 GM 305/350 CID, 514
V8 5.0/5.7L GM305 & GM 350 CID 515
5.0/5.8L & Fi/FSi FORD 302/351 CID V8 516
V8 7.4/8.2 GM 454/502 CID 517
SOUPAPES D'ADMISSION ET D'ÉCHAPPEMENT 518
COMPOSANTS 519

EMBASES ET PIÈCES 529

MODÉLES D'EMBASES ET D'HUILE 532
ACCOUPLEMENT MOTEUR 585
ANODES 557
ANODE CANADA METAL 565
ANODE RECMAR 558
ANODE TECNOSEAL 560
CHANGEMENT 584
DAMPER 585
DURITES D'EMBASES 583
JOINTS SPI ET JOINTS TORIQUES 576
PIÈCES D'EMBASES 534
IPS-A, B, C, D, E, F 534
SAIL DRIVE 120, 130, 150, M525 535
XDP 536
DPH / DPR 538
AQUAMATIC (SUPÉRIEURE) 540
SX (SUPÉRIEURE) 542
SX-A, FWD, DPS-A, DPS-B (SUPÉRIEURE) 544
DP-G, DPX-A (SUPÉRIEURE) 545
AQUAMATIC (INFÉRIEUR) 546
AQUAMATIC DP (INFÉRIEUR) 547
SX (INFÉRIEUR) 548
DP-S (INFÉRIEUR) 549
DP-SM (INFÉRIEUR) 550
DPS-A, DPS-B (INFÉRIEUR) 552
SX-A (INFÉRIEUR) 553
FWD (INFÉRIEUR) 554
AQUAMATIC (INTERMÉDIAIRE) 555
DP-E, DP-G, DP-C, DP-D (INTERMÉDIAIRE) 556
PRESSE ETOUPE - KIT 585
REPARATION AQUAMATIC - COMPONSANTS 568
REPARATION SX COBRA - COMPONSANTS 571
REPARATION EMBASES ET INVERSEURS - KITS 571
SUPPORT MOTEUR 584
TRANSOM 577
DP-S 577
SX 578
SX-A TSK 579
TRANSOM - COMPONSANTS 580
JOINTS 581
SOUFFLET DE CARDAN 582
ROULEMENT D'ARBRE 581
ROULEMENTS ET JOINTS SPI - KITS 580
VERIN ET COMPOSANTS DE DIRECTION 529
ACTIONNEUR 529
CÂBLE DE COMMANDE 33c 531
CÂBLE RUDDER 531
FLEXIBLES 529
KIT REPARATION 530
POMPE HYDRAULIQUE 530
POULIE DE SERVO POMPE 531
SERVO POMPE 531
EXTRACTEUR POULIE 530
SOUFFLET 530

SYSTÈME DE PROPULSION 586

HÉLICES SOLAS 586
HÉLICES ORIGINALES VOLVO 588

REF --> RO 593
RO --> REF 605

GUÍA MANTENIMIENTO DE MOTORES — GASOLINE ENGINE MAINTENANCE GUIDE — GUIDA MANUTENZIONE MOTORI — GUIDE DE MAINTENANCE DES MOTEURS

GAS

		REF				
AQ95 AQ100 AQ110 AQ115 AQ120A AQ130		REC3517857	FILTRO ACEITE	OIL FILTER	FILTRO OLIO	FILTRE A HUILE
		REC3581078	FILTRO COMBUSTIBLE	FUEL FILTER	FILTRO COMBUSTIBILE	FILTRE A ESSENCE
		JOH09-1026B	IMPULSOR	IMPELLER	GIRANTE	TURBINE
		REC876080	TERMOSTATO	THERMOSTAT	TERMOSTATO	THERMOSTAT
		REC966891	CORREA	BELT	CINGHIA	COURROIE
		NGKBP7HS	BUJÍAS	SPARK PLUGS	CANDELE	BOUGIES
AQ170A, B, C		REC3517857	FILTRO ACEITE	OIL FILTER	FILTRO OLIO	FILTRE A HUILE
		REC3581078	FILTRO COMBUSTIBLE	FUEL FILTER	FILTRO COMBUSTIBILE	FILTRE A ESSENCE
		JOH09-801B	IMPULSOR	IMPELLER	GIRANTE	TURBINE
		REC875791	TERMOSTATO	THERMOSTAT	TERMOSTATO	THERMOSTAT
		REC966694	CORREA	BELT	CINGHIA	COURROIE
		NGKBP7HS	BUJÍAS	SPARK PLUGS	CANDELE	BOUGIES
AQ120B AQ125A, B AQ131A, B, C, D 230A, B AQ140A AQ145A, B AQ151A, B, C AQ250, A, B		REC3517857	FILTRO ACEITE	OIL FILTER	FILTRO OLIO	FILTRE A HUILE
		REC3581078	FILTRO COMBUSTIBLE	FUEL FILTER	FILTRO COMBUSTIBILE	FILTRE A ESSENCE
		JOH09-801B	IMPULSOR	IMPELLER	GIRANTE	TURBINE
		REC875580	TERMOSTATO 82º	THERMOSTAT 82º	TERMOSTATO 82º	THERMOSTAT 82º
	120A/B,125A/B, 140A,145A	REC966694	CORREA	BELT	CINGHIA	COURROIE
	130B/C	REC966891	CORREA	BELT	CINGHIA	COURROIE
	131A/B/C/D, 145B, 151A/B/C	REC966382	CORREA	BELT	CINGHIA	COURROIE
	AQ120,125A/B, 145	NGKBPR6ES	BUJÍAS	SPARK PLUG	CANDELE	BOUGIES
	AQ131A/B/C, 140A, 151A/B/C, 230A, 250A/B	NGKBPR7ES	BUJÍAS	SPARK PLUG	CANDELE	BOUGIES
AQ255A, B		REC35-06003	FILTRO ACEITE	OIL FILTER	FILTRO OLIO	FILTRE A HUILE
		REC982230	FILTRO COMBUSTIBLE	FUEL FILTER	FILTRO COMBUSTIBILE	FILTRE A ESSENCE
	AQ255A	SHE09959K	IMPULSOR	IMPELLER	GIRANTE	TURBINE
	AQ255B	JOH09-1027B	IMPULSOR (Ancho 31 mm)	IMPELLER (Width 31 mm)	GIRANTE (Largh. 31 mm)	TURBINE (Largeur 31 mm)
	AQ255B	REC22120-0001	IMPULSOR (Ancho 50 mm)	IMPELLER (Width 50 mm)	GIRANTE (Largh. 50 mm)	TURBINE (Largeur 50 mm)
		REC876305	TERMOSTATO 62º	THERMOSTAT 62º	TERMOSTATO 62º	THERMOSTAT 62º
		REC978750	CORREA	BELT	CINGHIA	COURROIE
		NGKUR6	BUJÍAS	SPARK PLUG	CANDELE	BOUGIES
AQ225B, C, D, E, F AQ231A, B BB231A		REC35-06003	FILTRO ACEITE	OIL FILTER	FILTRO OLIO	FILTRE A HUILE
		REC982230	FILTRO COMBUSTIBLE	FUEL FILTER	FILTRO COMBUSTIBILE	FILTRE A ESSENCE
		REC3581078	FILTRO COMBUSTIBLE	FUEL FILTER	FILTRO COMBUSTIBILE	FILTRE A ESSENCE
	B, C	SHE09959K	IMPULSOR	IMPELLER	GIRANTE	TURBINE
	D, E, F	REC22120-0001	IMPULSOR	IMPELLER	GIRANTE	TURBINE
		REC876305	TERMOSTATO 62º	THERMOSTAT 62º	TERMOSTATO 62º	THERMOSTAT 62º
		REC978750	CORREA (Bomba alternador)	BELT (Alternator pump)	CINGHIA (Pompe alter.)	COURROIE (Pompe alter.)
		GDY17291	CORREA (Dirección)	BELT (Steering)	CINGHIA (Sterzo)	COURROIE (Direction)
	AQ225A/B/C/D	NGKUR6	BUJÍAS	SPARK PLUG	CANDELE	BOUGIES
	AQ225E/F, 231A/B, BB231A	NGKYR5	BUJÍAS	SPARK PLUG	CANDELE	BOUGIES
AQ260A, B BB260A, B, C		REC35-06003	FILTRO ACEITE	OIL FILTER	FILTRO OLIO	FILTRE A HUILE
		REC982230	FILTRO COMBUSTIBLE	FUEL FILTER	FILTRO COMBUSTIBILE	FILTRE A ESSENCE
		REC3581078	FILTRO COMBUSTIBLE	FUEL FILTER	FILTRO COMBUSTIBILE	FILTRE A ESSENCE
		JOH09-1027B	IMPULSOR (Ancho 31 mm)	IMPELLER (Width 31 mm)	GIRANTE (Largh.31 mm)	TURBINE (Largeur 31 mm)
		REC22120-0001	IMPULSOR (Ancho 50 mm)	IMPELLER (Width 50 mm)	GIRANTE (Largh. 50 mm)	TURBINE (Largeur 50 mm)
		REC876305	TERMOSTATO 62º	THERMOSTAT 62º	TERMOSTATO 62º	THERMOSTAT 62º
		REC978750	CORREA	BELT	CINGHIA	COURROIE
		NGKBR6FS	BUJÍAS	SPARK PLUG	CANDELE	BOUGIES
AQ271A, B, C, D BB261A		REC35-06003	FILTRO ACEITE	OIL FILTER	FILTRO OLIO	FILTRE A HUILE
		REC855686	FILTRO COMBUSTIBLE	FUEL FILTER	FILTRO COMBUSTIBILE	FILTRE A ESSENCE
		REC3581078	FILTRO COMBUSTIBLE	FUEL FILTER	FILTRO COMBUSTIBILE	FILTRE A ESSENCE
		JOH09-1027B	IMPULSOR (Ancho 31 mm)	IMPELLER (Width 31 mm)	GIRANTE (Largh. 31 mm)	TURBINE (Largeur 31 mm)
		REC22120-0001	IMPULSOR (Ancho 50 mm)	IMPELLER (Width 50 mm)	GIRANTE (Largh. 50 mm)	TURBINE (Largeur 50 mm)
		REC876305	TERMOSTATO 62º	THERMOSTAT 62º	TERMOSTATO 62º	THERMOSTAT 62º
		REC978750	CORREA (Bomba alternador)	BELT (Pump alternator)	CINGHIA (Pompa altern.)	COURROIE (Pompe altern.)
		REC967111	CORREA (Dirección)	BELT (Steering)	CINGHIA (Sterzo)	COURROIE (Direction)
		NGKBR6FS	BUJÍAS	SPARK PLUG	CANDELE	BOUGIES
430, 431, 432, 434		REC841750	FILTRO ACEITE	OIL FILTER	FILTRO OLIO	FILTRE A HUILE
		REC855686	FILTRO COMBUSTIBLE	FUEL FILTER	FILTRO COMBUSTIBILE	FILTRE A ESSENCE
		REC3581078	FILTRO COMBUSTIBLE	FUEL FILTER	FILTRO COMBUSTIBILE	FILTRE A ESSENCE
		JOH09-1027B	IMPULSOR (Ancho 31 mm)	IMPELLER (Width 31 mm)	GIRANTE (Largh. 31 mm)	TURBINE (Largeur 31 mm)
		REC22120-0001	IMPULSOR (Ancho 50 mm)	IMPELLER (Width 50 mm)	GIRANTE (Largh. 50 mm)	TURBINE (Largeur 50 mm)
		REC876305	TERMOSTATO 62º	THERMOSTAT 62º	TERMOSTATO 62º	THERMOSTAT 62º
		REC978750	CORREA (Bomba alternador)	BELT (Pump alternator)	CINGHIA (Pompa altern.)	COURROIE (Pompe altern.)
		REC967111	CORREA (Dirección)	BELT (Steering)	CINGHIA (Sterzo)	COURROIE (Direction)
		NGKBR6FS	BUJÍAS	SPARK PLUG	CANDELE	BOUGIES
AQ280A AQ290A		REC35-06003	FILTRO ACEITE	OIL FILTER	FILTRO OLIO	FILTRE A HUILE
		REC982230	FILTRO COMBUSTIBLE	FUEL FILTER	FILTRO COMBUSTIBILE	FILTRE A ESSENCE
		REC3581078	FILTRO COMBUSTIBLE	FUEL FILTER	FILTRO COMBUSTIBILE	FILTRE A ESSENCE
		JOH09-1027B	IMPULSOR (Ancho 31 mm)	IMPELLER (Width 31 mm)	GIRANTE (Largh. 31 mm)	TURBINE (Largeur 31 mm)
		REC22120-0001	IMPULSOR (Ancho 50 mm)	IMPELLER (Width 50 mm)	GIRANTE (Largh. 50 mm)	TURBINE (Largeur 50 mm)
		REC876305	TERMOSTATO 62º	THERMOSTAT 62º	TERMOSTATO 62º	THERMOSTAT 62º
		REC978750	CORREA	BELT	CINGHIA	COURROIE
	AQ280A	NGKUR6	BUJÍAS	SPARK PLUGS	CANDELE	BOUGIES
	AQ290A/B	NGKBR6FS	BUJÍAS	SPARK PLUGS	CANDELE	BOUGIES

		REF				
AQ311A, B		REC35-06003	FILTRO ACEITE	OIL FILTER	FILTRO OLIO	FILTRE A HUILE
		REC855686	FILTRO COMBUSTIBLE	FUEL FILTER	FILTRO COMBUSTIBILE	FILTRE A ESSENCE
		REC3581078	FILTRO COMBUSTIBLE	FUEL FILTER	FILTRO COMBUSTIBILE	FILTRE A ESSENCE
		JOH09-1027B	IMPULSOR (Ancho 31 mm)	IMPELLER (Width 31 mm)	GIRANTE (Largh. 31 mm)	TURBINE (Largeur 31 mm)
		REC22120-0001	IMPULSOR (Ancho 50 mm)	IMPELLER (Width 50 mm)	GIRANTE (Largh. 50 mm)	TURBINE (Largeur 50 mm)
		REC876305	TERMOSTATO 62°	THERMOSTAT 62°	TERMOSTATO 62°	THERMOSTAT 62°
		REC978750	CORREA	BELT	CINGHIA	COURROIE
		NGKBR6FS	BUJÍAS	SPARK PLUGS	CANDELE	BOUGIES
500A, B 501A, B		REC35-06003	FILTRO ACEITE	OIL FILTER	FILTRO OLIO	FILTRE A HUILE
		REC855686	FILTRO COMBUSTIBLE	FUEL FILTER	FILTRO COMBUSTIBILE	FILTRE A ESSENCE
		REC3581078	FILTRO COMBUSTIBLE	FUEL FILTER	FILTRO COMBUSTIBILE	FILTRE A ESSENCE
		JOH09-1027B	IMPULSOR (Ancho 31 mm)	IMPELLER (Width 31 mm)	GIRANTE (Largh. 31 mm)	TURBINE (Largeur 31 mm)
		REC876305	TERMOSTATO 62°	THERMOSTAT 62°	TERMOSTATO 62°	THERMOSTAT 62°
		REC978750	CORREA (Bomba alternador)	BELT (Alternator pump)	CINGHIA (Pompe alternatore)	COURROIE (Pompe alternateur)
		REC967111	CORREA (Dirección)	BELT (Steering)	CINGHIA (Sterzo)	COURROIE (Direction)
		NGKBR6FS	BUJÍAS	SPARK PLUGS	CANDELE	BOUGIES
570A 571A 572A		REC35-06003	FILTRO ACEITE	OIL FILTER	FILTRO OLIO	FILTRE A HUILE
		REC855686	FILTRO COMBUSTIBLE	FUEL FILTER	FILTRO COMBUSTIBILE	FILTRE A ESSENCE
		JOH09-1027B	IMPULSOR (Ancho 31 mm)	IMPELLER (Width 31 mm)	GIRANTE (Largh.31 mm)	TURBINE (Largeur 31 mm)
		CEF500104	IMPULSOR (Ancho 50 mm)	IMPELLER (Width 50 mm)	GIRANTE (Largh. 50 mm)	TURBINE (Largeur 50 mm)
		REC876305	TERMOSTATO 62°	THERMOSTAT 62°	TERMOSTATO 62°	THERMOSTAT 62°
		REC978750	CORREA (Bomba alternador)	BELT (Alternator pump)	CINGHIA (Pompe alternatore)	COURROIE (Pompe alternateur)
		REC967111	CORREA (Dirección)	BELT (Steering)	CINGHIA (Sterzo)	COURROIE (Direction)
		NGKBR6FS	BUJÍAS	SPARK PLUGS	CANDELE	BOUGIES
740A, B		REC35-06003	FILTRO ACEITE	OIL FILTER	FILTRO OLIO	FILTRE A HUILE
		REC855686	FILTRO COMBUSTIBLE	FUEL FILTER	FILTRO COMBUSTIBILE	FILTRE A ESSENCE
		CEF500104	IMPULSOR	IMPELLER	GIRANTE	TURBINE
		REC876305	TERMOSTATO 62°	THERMOSTAT 62°	TERMOSTATO 62°	THERMOSTAT 62°
		RM967191	CORREA	BELT	CINGHIA	COURROIE
		NGKBR6FS	BUJÍAS	SPARK PLUGS	CANDELE	BOUGIES
7.4GL		RM3850559	FILTRO ACEITE	OIL FILTER	FILTRO OLIO	FILTRE A HUILE
		REC3862228	FILTRO COMBUSTIBLE	FUEL FILTER	FILTRO COMBUSTIBILE	FILTRE A ESSENCE
	MD	SHE09959K	IMPULSOR	IMPELLER	GIRANTE	TURBINE
	HU, NC, LK	JOH09-1027B	IMPULSOR	IMPELLER	GIRANTE	TURBINE
		REC3853983	TERMOSTATO	THERMOSTAT	TERMOSTATO	THERMOSTAT
		RM3850430	CORREA	BELT	CINGHIA	COURROIE
		CHARV15YC4	BUJÍAS	SPARK PLUGS	CANDELE	BOUGIES
7.4GI, GSI DPX385		RM3850559	FILTRO ACEITE	OIL FILTER	FILTRO OLIO	FILTRE A HUILE
		REC3862228	FILTRO COMBUSTIBLE	FUEL FILTER	FILTRO COMBUSTIBILE	FILTRE A ESSENCE
		JOH09-1027B	IMPULSOR	IMPELLER	GIRANTE	TURBINE
		REC3853983	TERMOSTATO	THERMOSTAT	TERMOSTATO	THERMOSTAT
	BY, WT, MD, HU, NC, LK	RM3854643	CORREA (Alternador)	BELT (Alternator)	CINGHIA (Alternatore)	COURROIE (Alternateur)
	MD, HU, NC, LK	RM3860087	CORREA (Dirección)	BELT (Steering)	CINGHIA (Sterzo)	COURROIE (Direction)
		NGKBR6FS	BUJÍAS	SPARK PLUGS	CANDELE	BOUGIES
		NGKUR6IX	BUJÍAS IRIDIUM	SPARK PLUGS IRIDIUM	CANDELE IRIDIUM	BOUGIES IRIDIUM
8.2GL, GSI DPX415		RM3850559	FILTRO ACEITE	OIL FILTER	FILTRO OLIO	FILTRE A HUILE
		REC3862228	FILTRO COMBUSTIBLE	FUEL FILTER	FILTRO COMBUSTIBILE	FILTRE A ESSENCE
	8.2GL	SHE09959K	IMPULSOR	IMPELLER	GIRANTE	TURBINE
	GSI, DPX HU-BY, WT	JOH09-1027B	IMPULSOR	IMPELLER	GIRANTE	TURBINE
		REC3853983	TERMOSTATO	THERMOSTAT	TERMOSTATO	THERMOSTAT
		RM3852607	CORREA	BELT	CINGHIA	COURROIE
	LK, BY, WT	RM978454	CORREA (Bomba)	BELT (Pump)	CINGHIA (Pompa)	COURROIE (Pompe)
	LK, BY, WT	RM3854643	CORREA (Alternador)	BELT (Alternator)	CINGHIA (Alternatore)	COURROIE (Alternateur)
	PNCA, PNVM	RM3850430	CORREA	BELT	CINGHIA	COURROIE
	EF	RM3860087	CORREA	BELT	CINGHIA	COURROIE
		NGKBR6FS	BUJÍAS	SPARK PLUGS	CANDELE	BOUGIES
		NGKBR6FIX	BUJÍAS IRIDIUM	SPARK PLUGS IRIDIUM	CANDELE IRIDIUM	BOUGIES IRIDIUM
3.0GLP-C, D, E,J		REC35-06003	FILTRO ACEITE	OIL FILTER	FILTRO OLIO	FILTRE A HUILE
		REC3847644	FILTRO COMBUSTIBLE	FUEL FILTER	FILTRO COMBUSTIBILE	FILTRE A ESSENCE
	C	JOH09-1027B	IMPULSOR	IMPELLER	GIRANTE	TURBINE
	D, E, J	JOH09-812B	IMPULSOR	IMPELLER	GIRANTE	TURBINE
		REC3853799	TERMOSTATO	THERMOSTAT	TERMOSTATO	THERMOSTAT
	C, D	RM3586325	CORREA (Alternador)	BELT (Alternator)	CINGHIA (Alternatore)	COURROIE (Alternateur)
	E	REC3860092	CORREA (Dirección)	BELT (Steering)	CINGHIA (Sterzo)	COURROIE (Direction)
	J	REC3888177	CORREA	BELT	CINGHIA	COURROIE
		NGKBPR6EFS	BUJÍAS	SPARK PLUGS	CANDELE	BOUGIES
3.0GXI-J 3.0GXIC-J		REC35-06003	FILTRO ACEITE	OIL FILTER	FILTRO OLIO	FILTRE A HUILE
		REC3847644	FILTRO COMBUSTIBLE	FUEL FILTER	FILTRO COMBUSTIBILE	FILTRE A ESSENCE
		JOH09-812B	IMPULSOR	IMPELLER	GIRANTE	TURBINE
		REC21132392	CORREA	BELT	CINGHIA	COURROIE
		NGKBPR6EFS	BUJÍAS	SPARK PLUGS	CANDELE	BOUGIES
4.3GL-J, GL-JF		REC8692305	FILTRO ACEITE	OIL FILTER	FILTRO OLIO	FILTRE A HUILE
4.3GXI-J, GXI-JF	GL-J, GL-JF	REC3862228	FILTRO COMBUSTIBLE	FUEL FILTER	FILTRO COMBUSTIBILE	FILTRE A ESSENCE
4.3OSI-J, OSI-JF	GXI, OSI	REC3847644	FILTRO COMBUSTIBLE	FUEL FILTER	FILTRO COMBUSTIBILE	FILTRE A ESSENCE
		JOH09-812B	IMPULSOR	IMPELLER	GIRANTE	TURBINE
		REC3587597	TERMOSTATO	THERMOSTAT	TERMOSTATO	THERMOSTAT
		REC3831426	TERMOSTATO (Agua Dulce)	THERMOSTAT (Fresh Water)	TERMOSTATO (Acqua dolce)	THERMOSTAT (Eau douce)
		REC21132390	CORREA	BELT	CINGHIA	COURROIE
		NGKBPR6EFS	BUJÍAS	SPARK PLUGS	CANDELE	BOUGIES
		NGKUR6IX	BUJÍAS IRIDIUM	SPARK PLUGS IRIDIUM	CANDELE IRIDIUM	BOUGIES IRIDIUM

GAS

		REF				
4.3GXI-G, GXI-GF 4.3OSI-G, OSI-GF	GF	REC35-06003	FILTRO ACEITE	OIL FILTER	FILTRO OLIO	FILTRE A HUILE
		REC3862228	FILTRO COMBUSTIBLE	FUEL FILTER	FILTRO COMBUSTIBILE	FILTRE A ESSENCE
		JOH09-812B	IMPULSOR	IMPELLER	GIRANTE	TURBINE
		REC3831426	TERMOSTATO	THERMOSTAT	TERMOSTATO	THERMOSTAT
	G	REC3587597	TERMOSTATO	THERMOSTAT	TERMOSTATO	THERMOSTAT
		RM3889124	CORREA	BELT	CINGHIA	COURROIE
		NGKBPR6EFS	BUJÍAS	SPARK PLUGS	CANDELE	BOUGIES
		NGKUR6IX	BUJÍAS IRIDIUM	SPARK PLUGS IRIDIUM	CANDELE IRIDIUM	BOUGIES IRIDIUM
5.0GL-J, GL-JF, 5.0GXI-J, GXI-JF 5.0OSI-J, OSI-JF	GL	REC8692305	FILTRO ACEITE	OIL FILTER	FILTRO OLIO	FILTRE A HUILE
		REC3862228	FILTRO COMBUSTIBLE	FUEL FILTER	FILTRO COMBUSTIBILE	FILTRE A ESSENCE
	GXI, OSI	REC3847644	FILTRO COMBUSTIBLE	FUEL FILTER	FILTRO COMBUSTIBILE	FILTRE A ESSENCE
		JOH09-812B	IMPULSOR	IMPELLER	GIRANTE	TURBINE
		REC3587597	TERMOSTATO	THERMOSTAT	TERMOSTATO	THERMOSTAT
		REC3831426	TERMOSTATO (Agua Dulce)	THERMOSTAT (Fresh Water)	TERMOSTATO (Acqua dolce)	THERMOSTAT (Eau douce)
		REC21132390	CORREA	BELT	CINGHIA	COURROIE
		NGKBPR6EFS	BUJÍAS	SPARK PLUGS	CANDELE	BOUGIES
		NGKUR6IX	BUJÍAS IRIDIUM	SPARK PLUGS IRIDIUM	CANDELE IRIDIUM	BOUGIES IRIDIUM
5.0GXI-G, GXI-GF 5.0OSI-G, OSI-GF		REC35-06003	FILTRO ACEITE	OIL FILTER	FILTRO OLIO	FILTRE A HUILE
		REC3862228	FILTRO COMBUSTIBLE	FUEL FILTER	FILTRO COMBUSTIBILE	FILTRE A ESSENCE
		JOH09-812B	IMPULSOR	IMPELLER	GIRANTE	TURBINE
		REC3831426	TERMOSTATO	THERMOSTAT	TERMOSTATO	THERMOSTAT
		RM3889124	CORREA	BELT	CINGHIA	COURROIE
		NGKBPR6EFS	BUJÍAS	SPARK PLUGS	CANDELE	BOUGIES
		NGKUR6IX	BUJÍAS IRIDIUM	SPARK PLUGS IRIDIUM	CANDELE IRIDIUM	BOUGIES IRIDIUM
5.7GI-F, GI-FF 5.7GXI-G, GXI-GF 5.7OSI-E, OSI-EF		REC35-06003	FILTRO ACEITE	OIL FILTER	FILTRO OLIO	FILTRE A HUILE
		REC3862228	FILTRO COMBUSTIBLE	FUEL FILTER	FILTRO COMBUSTIBILE	FILTRE A ESSENCE
		JOH09-812B	IMPULSOR	IMPELLER	GIRANTE	TURBINE
		REC3587597	TERMOSTATO	THERMOSTAT	TERMOSTATO	THERMOSTAT
		REC3831426	TERMOSTATO (Agua Dulce)	THERMOSTAT (Fresh Water)	TERMOSTATO (Acqua dolce)	THERMOSTAT (Eau douce)
		RM3889124	CORREA	BELT	CINGHIA	COURROIE
		NGKBPR6EFS	BUJÍAS	SPARK PLUGS	CANDELE	BOUGIES
		NGKUR6IX	BUJÍAS IRIDIUM	SPARK PLUGS IRIDIUM	CANDELE IRIDIUM	BOUGIES IRIDIUM
5.7GI300-J, GI300-JF 5.7OSI-J, OSI-JF 5.7GXI-J, GXI-JF 5.7OSXI-J, OSXI-JF		REC8692305	FILTRO ACEITE	OIL FILTER	FILTRO OLIO	FILTRE A HUILE
		REC3847644	FILTRO COMBUSTIBLE	FUEL FILTER	FILTRO COMBUSTIBILE	FILTRE A ESSENCE
		JOH09-812B	IMPULSOR	IMPELLER	GIRANTE	TURBINE
		REC3587597	TERMOSTATO	THERMOSTAT	TERMOSTATO	THERMOSTAT
		REC3831426	TERMOSTATO (Agua Dulce)	THERMOSTAT (Fresh Water)	TERMOSTATO (Acqua dolce)	THERMOSTAT (Eau douce)
		REC21132390	CORREA	BELT	CINGHIA	COURROIE
		NGKBPR6EFS	BUJÍAS	SPARK PLUGS	CANDELE	BOUGIES
		NGKUR6IX	BUJÍAS IRIDIUM	SPARK PLUGS IRIDIUM	CANDELE IRIDIUM	BOUGIES IRIDIUM
8.1GI-J, GI-JF 8.1GXI-J, GXI-JF 8.1OSI-J, OSI-JF		REC8692305	FILTRO ACEITE	OIL FILTER	FILTRO OLIO	FILTRE A HUILE
		REC3847644	FILTRO COMBUSTIBLE	FUEL FILTER	FILTRO COMBUSTIBILE	FILTRE A ESSENCE
		JOH09-812B	IMPULSOR	IMPELLER	GIRANTE	TURBINE
		REC3853983	TERMOSTATO	THERMOSTAT	TERMOSTATO	THERMOSTAT
		REC3831426	TERMOSTATO (Agua Dulce)	THERMOSTAT (Fresh Water)	TERMOSTATO (Acqua dolce)	THERMOSTAT (Eau douce)
		RM21132385	CORREA	BELT	CINGHIA	COURROIE
		NGKBPR6EFS	BUJÍAS	SPARK PLUGS	CANDELE	BOUGIES
		NGKUR6IX	BUJÍAS IRIDIUM	SPARK PLUGS IRIDIUM	CANDELE IRIDIUM	BOUGIES IRIDIUM
8.1GI-H, GI-HF 8.1GXI-G, GXI-GF 8.1OSI-D, OSI-DF		REC35-06003	FILTRO ACEITE	OIL FILTER	FILTRO OLIO	FILTRE A HUILE
		REC3847644	FILTRO COMBUSTIBLE	FUEL FILTER	FILTRO COMBUSTIBILE	FILTRE A ESSENCE
		JOH09-812B	IMPULSOR	IMPELLER	GIRANTE	TURBINE
		REC3853983	TERMOSTATO	THERMOSTAT	TERMOSTATO	THERMOSTAT
		REC3831426	TERMOSTATO (Agua Dulce)	THERMOSTAT (Fresh Water)	TERMOSTATO (Acqua dolce)	THERMOSTAT (Eau douce)
		REC21132390	CORREA	BELT	CINGHIA	COURROIE
		NGKBPR6EFS	BUJÍAS	SPARK PLUGS	CANDELE	BOUGIES
		NGKUR6IX	BUJÍAS IRIDIUM	SPARK PLUGS IRIDIUM	CANDELE IRIDIUM	BOUGIES IRIDIUM
V6-200/240/280, V8-300/350 (Gen 5) V8-380/430 (6.2L-Gen V)		REC8692305	FILTRO ACEITE	OIL FILTER	FILTRO OLIO	FILTRE A HUILE
		REC3847644	FILTRO COMBUSTIBLE	FUEL FILTER	FILTRO COMBUSTIBILE	FILTRE A ESSENCE
		REC21403633	ANODO COLECTOR	MANIFOLD ANODE	ANODO COLLETTORE	ANODE COLECTEUR
		JOH09-1027B	IMPULSOR	IMPELLER	GIRANTE	TURBINE
V8-350/380/430 (6.0L), V8-225/270/300/ 320 (Gen1+)		REC8692305	FILTRO ACEITE	OIL FILTER	FILTRO OLIO	FILTRE A HUILE
		REC3847644	FILTRO COMBUSTIBLE	FUEL FILTER	FILTRO COMBUSTIBILE	FILTRE A ESSENCE
		TEN02029T	ANODO INTERCAMBIADOR	EXCHANGER ANODE	ANODO SCAMBIATORE	ANODE ÉCHANGEUR
		JOH09-1027B	IMPULSOR	IMPELLER	GIRANTE	TURBINE
		NGKIZTR5B11	BUJÍAS IRIDIUM	SPARK PLUGS IRIDIUM	CANDELE IRIDIUM	BOUGIES IRIDIUM
V6-200/225 (Gen 1+)		REC8692305	FILTRO ACEITE	OIL FILTER	FILTRO OLIO	FILTRE A HUILE
		REC3847644	FILTRO COMBUSTIBLE	FUEL FILTER	FILTRO COMBUSTIBILE	FILTRE A ESSENCE
		TEN02029T	ANODO INTERCAMBIADOR	EXCHANGER ANODE	ANODO SCAMBIATORE	ANODE ÉCHANGEUR
		JOH09-812B	IMPULSOR	IMPELLER	GIRANTE	TURBINE
		NGKIZTR5B11	BUJÍAS IRIDIUM	SPARK PLUGS IRIDIUM	CANDELE IRIDIUM	BOUGIES IRIDIUM

		REF				
MD1A, B MD2A, B MD5A, B, C MD11C, D		REC834337	FILTRO ACEITE	OIL FILTRE	FILTRO OLIO	FILTRE A HUILE
	MD1/2, 5A/B, 11C	REC876554	FILTRO COMBUSTIBLE	FUEL FILTER ELEMENT	FILTRO COMBUSTIBILE	FILTRE A CARBURANT
	MD5, MD11	REC829913	FILTRO COMBUSTIBLE BLINDADO	FUEL FILTER	FILTRO COMBUSTIBILE	FILTRE A CARBURANT
		JOH09-806B	IMPULSOR (6 tornillos en tapa)	IMPELLER (6 bolt in cap)	GIRANTE (6 viti en cop-perchio)	TURBINE (6 vis en couvercle)
		JOH09-808B	IMPULSOR (4 tornillos en tapa)	IMPELLER (4 bolt in cap)	GIRANTE (4 viti en cop-perchio)	TURBINE (4 vis en couvercle)
	MD1B	REC875580	TERMOSTATO 75º	THERMOSTAT 75º	TERMOSTATO 75º)	THERMOSTAT 75º
	MD2/11	REC876080	TERMOSTATO 60º	THERMOSTAT 60º	TERMOSTATO 60º	THERMOSTAT 60º
	MD11	REC877349	TERMOSTATO AGUA DULCE (circuito cerrado 74º)	THERMOSTAT FRESH WATER (74º)	TERMOSTATO ACQUA DOLCE (circuito chiuso 74º)	THERMOSTAT EAU DOUCE (circuit fermé 74º)
	MD5A/B/C	REC875783	TERMOSTATO 60º	THERMOSTAT (60º)	TERMOSTATO 60º	THERMOSTAT 60º
	MD1/2	REC966990	CORREA DINAMO	BELT DYNAMO	CINGHIA DINAMO	COURROIE DYNAMO
	MD1/2	REC966906	CORREA ALTERNADOR (900 mm)	BELT ALTERNATOR (900 mm)	CINGHIA ALTERNATORE (900 mm)	COURROIE ALTERNATEUR (900mm)
	MD1/2	REC3852106	CORREA ALTERNADOR (1.025 mm)	BELT ALTERNATOR (1.025 mm)	CINGHIA ALTERNATORE (1.025 mm)	COURROIE ALTERNATEUR (1.025 mm)
	MD5A/B/C	REC966990	CORREA	BELT	CINGHIA	COURROIE
	MD11C/D	REC966906	CORREA (900 mm)	BELT (900 mm)	CINGHIA (900 mm)	COURROIE (900mm)
	MD11C/D	REC966931	CORREA (1.400 mm)	BELT (1.400 mm)	CINGHIA (1.400 mm)	COURROIE (1.400 mm)
	MD11C/D	REC966942	CORREA (1.550 mm con circuito cerrado)	BELT (1.550 mm fresh water)	CINGHIA (1.550 mm con circuito chiuso)	COURROIE (1.550 mm circuit fermé)
MD6A, B		REC834337	FILTRO ACEITE	OIL FILTRE	FILTRO OLIO	FILTRE A HUILE
		REC21492771	FILTRO COMBUSTIBLE	FUEL FILTER	FILTRO COMBUSTIBILE	FILTRE A CARBURANT
		JOH09-806B	IMPULSOR (6 tornillos en tapa)	IMPELLER (6 bolt in cap)	GIRANTE (6 viti en copperchio)	TURBINE (6 vis en couvercle)
		JOH09-808B	IMPULSOR (4 tornillos en tapa)	IMPELLER (4 bolt in cap)	GIRANTE (4 viti en copperchio)	TURBINE (4 vis en couvercle)
		REC875796	TERMOSTATO 60º	THERMOSTAT 60º	TERMOSTATO 60º	THERMOSTAT 60º
	MD6A/B (1234+)	REC3858462	CORREA DINAMO	BELT DYNAMO	CINGHIA DINAMO	COURROIE DYNAMO
		REC966933	CORREA ALTERNADOR	BELT ALTERNATOR	CINGHIA ALTERNATORE	COURROIE ALTERNATEUR
MD7A, B		REC834337	FILTRO ACEITE	OIL FILTRE	FILTRO OLIO	FILTRE A HUILE
		REC21492771	FILTRO COMBUSTIBLE	FUEL FILTER	FILTRO COMBUSTIBILE	FILTRE A CARBURANT
		JOH09-808B	IMPULSOR	IMPELLER	GIRANTE	TURBINE
		REC875796	TERMOSTATO 60º	THERMOSTAT 60º	TERMOSTATO 60º	THERMOSTAT 60º
	MD7A	REC966933	CORREA	BELT	CINGHIA	COURROIE
	MD7B	REC966707	CORREA	BELT	CINGHIA	COURROIE
MD3B MD17C, D		REC834337	FILTRO ACEITE	OIL FILTRE	FILTRO OLIO	FILTRE A HUILE
		REC876554	FILTRO COMBUSTIBLE	FUEL FILTER	FILTRO COMBUSTIBILE	FILTRE A CARBURANT
	MD17	REC829913	FILTRO COMBUSTIBLE	FUEL FILTER	FILTRO COMBUSTIBILE	FILTRE A CARBURANT
		JOH09-808B	IMPULSOR	IMPELLER	GIRANTE	TURBINE
		REC876080	TERMOSTATO 60º	THERMOSTAT 60º	TERMOSTATO 60º	THERMOSTAT 60º
		REC966383	TERMOSTATO (Aqua dulce circuito cerrado 74º)	THERMOSTAT (Fresh water 74º)	TERMOSTATO (acqua dolce 74º circuito chiuso)	THERMOSTAT EAU DOUCE (circuit fermé 74º)
	MD17C/D	REC966383	CORREA	BELT	CINGHIA	COURROIE
	MD17C/D	GDY15545	CORREA (1.375mm Circuito cerrado)	BELT (1.375 mm Fresh water)	CINGHIA (1.375mm circuito chiuso)	COURROIE (1.5375 mm circuit fermé)
MD21A, B AQD21A, B		REC3581621	FILTRO ACEITE	OIL FILTER	FILTRO OLIO	FILTRE A HUILE
		REC3581078	FILTRO COMBUSTIBLE	FUEL FILTER	FILTRO COMBUSTIBILE	FILTRE A CARBURANT
		JOH09-801B	IMPULSOR	IMPELLER	GIRANTE	TURBINE
		REC875785	TERMOSTATO	THERMOSTAT	TERMOSTATO	THERMOSTAT
		REC829207	CORREA	BELT	CINGHIA	COURROIE
MD22A, B TMD22A, B TAMD22A	A	REC861476	FILTRO ACEITE	OIL FILTER	FILTRO OLIO	FILTRE A HUILE
	B, C	REC3517857	FILTRO ACEITE	OIL FILTER	FILTRO OLIO	FILTRE A HUILE
		REC3840335	FILTRO COMBUSTIBLE	FUEL FILTER	FILTRO COMBUSTIBILE	FILTRE A CARBURANT
		JOH09-1027B	IMPULSOR	IMPELLER	GIRANTE	TURBINE
		RM6210419	TERMOSTATO	THERMOSTAT	TERMOSTATO	THERMOSTAT
		RM966912	CORREA	BELT	CINGHIA	COURROIE
MD30A, B, D AQ30A, B, D TAMD30A, B, D TMD30A, B, D		REC3517857	FILTRO ACEITE	OIL FILTER	FILTRO OLIO	FILTRE A HUILE
		REC21492771	FILTRO COMBUSTIBLE	FUEL FILTER	FILTRO COMBUSTIBILE	FILTRE A CARBURANT
		REC876185	FILTRO AIRE	AIR FILTER	FILTRO ARIA	FILTRE A AIR
		REC876069	FILTRO CÁRTER	CÁRTER FILTER	FILTRO CÁRTER	FILTRE RENIFLARD
		REC838929	ÁNODO MOTOR	ENGINE ANODE	ANODO MOTORE	ANODE MOTEUR
		JOH09-1028B	IMPULSOR	IMPELLER	GIRANTE	TURBINE
		REC3831425	TERMOSTATO	THERMOSTAT	TERMOSTATO	THERMOSTAT
		REC966978	CORREA (1.100 mm)	BELT (1.100 mm)	CINGHIA (1.100 mm)	COURROIE (1.100 mm)
AQAD31, A AD31A, B, D, XD, P, L-A MD31, A TMD31A, B, D, L-A TAMD31A, B, D, P, L, M, S-A KAD32A		REC3517857	FILTRO ACEITE	OIL FILTER	FILTRO OLIO	FILTRE A HUILE
		REC21492771	FILTRO COMBUSTIBLE	FUEL FILTER	FILTRO COMBUSTIBILE	FILTRE A CARBURANT
	antiguo | old vecchio | ancien moderno | new moderno | moderne	REC858488	FILTRO AIRE (Metal)	AIR FILTER (Metal.)	FILTRO ARIA (Metal.)	FILTRE A AIR (Métal.)
		REC21646645	FILTRO AIRE (Plast.)	AIR FILTER (Plast.)	FILTRO ARIA (Plast.)	FILTRE A AIR (Plast.)
		REC876069	FILTRO CÁRTER	CÁRTER FILTER	FILTRO CÁRTER	FILTRE RENIFLARD
		REC838929	ÁNODO MOTOR	ENGINE ANODE	ANODO MOTORE	ANODE MOTEUR
		JOH09-1028B	IMPULSOR	IMPELLER	GIRANTE	TURBINE
	antiguo | old vecchio | ancien moderno | new moderno | moderne	REC3831426	TERMOSTATO 70º	THERMOSTAT 70º	TERMOSTATO 70º	THERMOSTAT 70º
		REC3831424	TERMOSTATO 81º	THERMOSTAT 81º	TERMOSTATO 81º	THERMOSTAT 81º
	KAD32-PA	RM3581460	CORREA COMPRESOR	COMPRESOR BELT	CINGHIA COMPRESSORE	COURROIE COMPRESSEUR
	KAD32-PA	REC861564	CORREA BOMBA	BELT PUMP	CINGHIA PUMPA	COURROIE POMPE
	KAD32-PA	REC977542	CORREA ALTERNADOR	BELT ALTERNATOR	CINGHIA ALTERNATORE	COURROIE ALTERNATEUR
		REC966978	CORREA (1.100 mm)	BELT (1.100 mm)	CINGHIA (1.100 mm)	COURROIE (1.100 mm)

		REF				
MD40A TMD40A, B, C TAMD40A B AQD40A AQAD40A, B		REC471034	FILTRO ACEITE	OIL FILTER	FILTRO OLIO	FILTRE A HUILE
		REC3840335	FILTRO COMBUSTIBLE	FUEL FILTER	FILTRO COMBUSTIBILE	FILTRE A CARBURANT
		REC876185	FILTRO AIRE	AIR FILTER	FILTRO ARIA	FILTRE A AIR
		REC876069	FILTRO CÁRTER	CÁRTER FILTER	FILTRO CÁRTER	FILTRE RENIFLARD
		REC838929	ÁNODO MOTOR	ENGINE ANODE	ANODO MOTORE	ANODE MOTEUR
		JOH09-1028B	IMPULSOR	IMPELLER	GIRANTE	TURBINE
	TAMD40, AD40	JOH09-1029B	IMPULSOR	IMPELLER	GIRANTE	TURBINE
	antiguo | old vecchio | ancien	REC3831426	TERMOSTATO 70º	THERMOSTAT 70º	TERMOSTATO 70º	THERMOSTAT 70º
	moderno | new moderno | moderne	REC3831424	TERMOSTATO 81º	THERMOSTAT 81º	TERMOSTATO 81º	THERMOSTAT 81º
		REC966978	CORREA (1.100 mm)	BELT (1.100 mm)	CINGHIA (1.100 mm)	COURROIE (1.100 mm)
TMD41A, B, D, L-A TAMD41A, B, D D41A, B, D, L-A AD41A, B, D AQD41A AQAD41A		REC471034	FILTRO ACEITE	OIL FILTER	FILTRO OLIO	FILTRE A HUILE
		REC3840335	FILTRO COMBUSTIBLE	FUEL FILTER	FILTRO COMBUSTIBILE	FILTRE A CARBURANT
	antiguo | old vecchio | ancien	REC858488	FILTRO AIRE (Ø200 mm)	AIR FILTER (Ø 200mm)	FILTRO ARIA (Ø 200mm)	FILTRE A AIR (Ø 200 mm)
	moderno | new moderno | moderne	REC21646645	FILTOR AIRE (Ø165mm)	AIR FILTER (Ø 165mm)	FILTRO ARIA (Ø 165mm)	FILTRE A AIR (Ø 165 mm)
		REC876069	FILTRO CÁRTER	CÁRTER FILTER	FILTRO CÁRTER	FILTRE RENIFLARD
		REC838929	ÁNODO MOTOR	ENGINE ANODE	ANODO MOTORE	ANODE MOTEUR
		JOH09-1028B	IMPULSOR	IMPELLER	GIRANTE	TURBINE
	antiguo | old vecchio | ancien	REC3831426	TERMOSTATO 70º	THERMOSTAT 70º	TERMOSTATO 70º	THERMOSTAT 70º
	moderno | new moderno | moderne	REC3831424	TERMOSTATO 81º	THERMOSTAT 81º	TERMOSTATO 81º	THERMOSTAT 81º
		REC966978	CORREA (1.100 mm)	BELT (1.100 mm)	CINGHIA (1.100 mm)	COURROIE (1.100 mm)
TAMD41P, L, M, H-A, H-B AD41P, L-A KAD42A, B, P-A KAMD42A, B, P-A KAD43P-A KAMD43P-A	41	REC471034	FILTRO ACEITE	OIL FILTER	FILTRO OLIO	FILTRE A HUILE
	42, 43	REC127695-35150	FILTRO ACEITE	OIL FILTER	FILTRO OLIO	FILTRE A HUILE
		REC3840335	FILTRO COMBUSTIBLE	FUEL FILTER	FILTRO COMBUSTIBILE	FILTRE A CARBURANT
	41 antiguo | old vecchio | ancien	REC858488	FILTRO AIRE (Ø 200 mm)	AIR FILTER (Ø 200 mm)	FILTRO ARIA (Ø 200 mm)	FILTRE A AIR (Ø 200 mm)
	41 moderno | new moderno | moderne KAD42WK	REC21646645	FILTOR AIRE (Ø 165 mm)	AIR FILTER (Ø 165 mm)	FILTRO ARIA (Ø 165 mm)	FILTRE A AIR (Ø 165 mm)
	42, 43	REC876185	FILTRO AIRE	AIR FILTER	FILTRO ARIA	FILTRE A AIR
		REC876069	FILTRO CÁRTER	CÁRTER FILTER	FILTRO CÁRTER	FILTRE RENIFLARD
		REC838929	ÁNODO MOTOR	ENGINE ANODE	ANODO MOTORE	ANODE MOTEUER
		JOH09-1028B	IMPULSOR	IMPELLER	GIRANTE	TURBINE
	moderno | new moderno | moderne	REC3831424	TERMOSTATO 81º	THERMOSTAT 81º	TERMOSTATO 81º	THERMOSTAT 81º
	KAD42A/B, KAMD42A/B/P-A	REC860388	CORREA COMP.	BELT COMP.	CINGHIA COMP.	COURROIE COMP.
	KAD43P-A, KAMD43P-A	REC860388	CORREA COMP.	BELT COMP.	CINGHIA COMP.	COURROIE COMP.
	KAD42A/B, KAMD42A/B	REC976483	CORREA BOMBA	BELT PUMP	CINGHIA PUMP	COURROIE POMPE
	KAD42, KAMD42, KAD43, KAMD43	REC977542	CORREA ALTERNADOR	BELT ALTERNATOR	CINGHIA ALTERNATORE	COURROIE ALTERNATEUR
KAD44P-A, P, B, P-C KAMD44P-A, P-B, P-C KAD300A KAMD300A		REC127695-35150	FILTRO ACEITE	OIL FILTER	FILTRO OLIO	FILTRE A HUILE
		REC3840335	FILTRO COMBUSTIBLE	FUEL FILTER	FILTRO COMBUSTIBILE	FILTRE A CARBURANT
		REC876185	FILTRO AIRE	AIR FILTER	FILTRO ARIA	FILTRE A AIR
		REC876069	FILTRO CÁRTER	CÁRTER FILTER	FILTRO CÁRTER	FILTRE RENIFLARD
		JOH09-1028B	IMPULSOR	IMPELLER	GIRANTE	TURBINE
	moderno | new moderno | moderne	REC3831424	TERMOSTATO 81º	THERMOSTAT 81º	TERMOSTATO 81º	THERMOSTAT 81º
	KAD44P-B/C, KAMD44P-A/B/C	REC860388	CORREA COMP.	BELT COMP.	CINGHIA COMP.	COURROIE COMP.
	KAD300-A, KAMD300-A	REC860388	CORREA COMP.	BELT COMP.	CINGHIA COMP.	COURROIE COMP.
	KAD44P-B/C, KAMD44P-A/B/C	REC861564	CORREA BOMBA	BELT PUMP	CINGHIA PUMP	COURROIE POMPE
	KAD300-A, KAMD300-A	REC977542	CORREA ALTERNADOR	BELT ALTERNATOR	CINGHIA ALTERNATORE	COURROIE ALTERNATEUR
TAMD60A, B, C		REC127695-35150	FILTRO ACEITE	OIL FILTER	FILTRO OLIO	FILTRE A HUILE
		REC21492771	FILTRO COMBUSTIBLE	FUEL FILTER	FILTRO COMBUSTIBILE	FILTRE A CARBURANT
		REC842280	FILTRO AIRE	AIR FILTER	FILTRO ARIA	FILTRE A AIR
		REC876069	FILTRO CÁRTER	CÁRTER FILTER	FILTRO CÁRTER	FILTRE RENIFLARD
		JOH09-1028B	IMPULSOR	IMPELLER	GIRANTE	TURBINE
		REC3831426	TERMOSTATO 70º	THERMOSTAT 70º	TERMOSTATO 70º	THERMOSTAT 70º
		REC3831425	TERMOSTATO 76º	THERMOSTAT 76º	TERMOSTATO 76º	THERMOSTAT 76º
		REC966906	CORREA ALTERNADOR	BELT ALTERNATOR	CINGHIA ALTERNATORE	COURROIE ALTERNATEUR
		RM966391	CORREA BOMBA	BELT PUMP	CINGHIA POMPA	COURROIE POMPE
TAMD61A TAMD62A		REC847741	FILTRO ACEITE	OIL FILTER	FILTRO OLIO	FILTRE A HUILE
		REC3827069	FILTRO ACEITE BY-PASS	OIL FILTER BY-PASS	FILTRO OLIO BY-PASS	FILTRE A HUILE BY-PASS
		REC21492771	FILTRO COMBUSTIBLE	FUEL FILTER	FILTRO COMBUSTIBILE	FILTRE A CARBURANT
		REC876185	FILTRO AIRE	AIR FILTER	FILTRO ARIA	FILTRE A AIR
		REC876069	FILTRO CÁRTER	CÁRTER FILTER	FILTRO CÁRTER	FILTRE RENIFLARD
		JOH09-819B	IMPULSOR	IMPELLER	GIRANTE	TURBINE
		REC3839110	TERMOSTATO 75º	THERMOSTAT 75º	TERMOSTATO 75º	THERMOSTAT 75º
	TAMD61A/B, TAMD62A	RM967193	CORREA ALTERNADOR	BELT ALTERNATOR	CINGHIA ALTERNATORE	COURROIE ALTERNATEUR
TAMD63P-A-L		REC847741	FILTRO ACEITE	OIL FILTER	FILTRO OLIO	FILTRE A HUILE
		REC3827069	FILTRO ACEITE BY-PASS	OIL FILTER BY-PASS	FILTRO OLIO BY-PASS	FILTRE A HUILE BY-PASS
		REC21492771	FILTRO COMBUSTIBLE	FUEL FILTER	FILTRO COMBUSTIBILE	FILTRE A CARBURANT
		REC3825038	FILTRO AIRE	AIR FILTER	FILTRO ARIA	FILTRE A AIR
		REC876069	FILTRO CÁRTER	CÁRTER FILTER	FILTRO CÁRTER	FILTRE RENIFLARD
		JOH09-821B	IMPULSOR	IMPELLER	GIRANTE	TURBINE
		REC3839110	TERMOSTATO 75º	THERMOSTAT 75º	TERMOSTATO 75º	THERMOSTAT 75º
		REC866653	CORREA	BELT	CINGHIA	COURROIE

	REF				
MD70B TMD70B	REC127695-35150	FILTRO ACEITE	OIL FILTER	FILTRO OLIO	FILTRE A HUILE
	REC21492771	FILTRO COMBUSTIBLE	FUEL FILTER	FILTRO COMBUSTIBILE	FILTRE A CARBURANT
	REC842280	FILTRO AIRE	AIR FILTER	FILTRO ARIA	FILTRE A AIR
	REC876069	FILTRO CÁRTER	CÁRTER FILTER	FILTRO CÁRTER	FILTRE RENIFLARD
	JOH09-1028B	IMPULSOR	IMPELLER	GIRANTE	TURBINE
	REC875785	TERMOSTATO 70º	THERMOSTAT 70º	TERMOSTATO 70º	THERMOSTAT 70º
	REC3831425	TERMOSTATO 76º	THERMOSTAT 76º	TERMOSTATO 76º	THERMOSTAT 76º
MD70C TMD70C	REC127695-35150	FILTRO ACEITE	OIL FILTER	FILTRO OLIO	FILTRE A HUILE
	REC21492771	FILTRO COMBUSTIBLE	FUEL FILTER	FILTRO COMBUSTIBILE	FILTRE A CARBURANT
	REC842280	FILTRO AIRE	AIR FILTER	FILTRO ARIA	FILTRE A AIR
	REC876069	FILTRO CÁRTER	CÁRTER FILTER	FILTRO CÁRTER	FILTRE RENIFLARD
	JOH09-1028B	IMPULSOR	IMPELLER	GIRANTE	TURBINE
	REC875785	TERMOSTATO 70º	THERMOSTAT 70º	TERMOSTATO 70º	THERMOSTAT 70º
	REC3831425	TERMOSTATO 76º	THERMOSTAT 76º	TERMOSTATO 76º	THERMOSTAT 76º
	REC866653	CORREA	BELT	CINGHIA	COURROIE
TAMD70B, C	REC471034	FILTRO ACEITE	OIL FILTER	FILTRO OLIO	FILTRE A HUILE
	REC21492771	FILTRO COMBUSTIBLE	FUEL FILTER	FILTRO COMBUSTIBILE	FILTRE A CARBURANT
	REC842280	FILTRO AIRE	AIR FILTER	FILTRO ARIA	FILTRE A AIR
	REC876069	FILTRO CÁRTER	CÁRTER FILTER	FILTRO CÁRTER	FILTRE RENIFLARD
	JOH09-1028B	IMPULSOR	IMPELLER	GIRANTE	TURBINE
	REC875785	TERMOSTATO 70º	THERMOSTAT 70º	TERMOSTATO 70º	THERMOSTAT 70º
	REC3831425	TERMOSTATO 76º	THERMOSTAT 76º	TERMOSTATO 76º	THERMOSTAT 76º
	RM966953	CORREA	BELT	CINGHIA	COURROIE
TAMD70D, E AQAD70B	REC471034	FILTRO ACEITE	OIL FILTER	FILTRO OLIO	FILTRE A HUILE
	REC21492771	FILTRO COMBUSTIBLE	FUEL FILTER	FILTRO COMBUSTIBILE	FILTRE A CARBURANT
	REC842280	FILTRO AIRE	AIR FILTER	FILTRO ARIA	FILTRE A AIR
	REC876069	FILTRO CÁRTER	CÁRTER FILTER	FILTRO CÁRTER	FILTRE RENIFLARD
	JOH09-1028B	IMPULSOR	IMPELLER	GIRANTE	TURBINE
	REC875785	TERMOSTATO 70º	THERMOSTAT 70º	TERMOSTATO 70º	THERMOSTAT 70º
	REC3831425	TERMOSTATO 76º	THERMOSTAT 76º	TERMOSTATO 76º	THERMOSTAT 76º
	RM966953	CORREA	BELT	CINGHIA	COURROIE
AQD70C, D	REC127695-35150	FILTRO ACEITE	OIL FILTER	FILTRO OLIO	FILTRE A HUILE
	REC21492771	FILTRO COMBUSTIBLE	FUEL FILTER	FILTRO COMBUSTIBILE	FILTRE A CARBURANT
	REC842280	FILTRO AIRE	AIR FILTER	FILTRO ARIA	FILTRE A AIR
	REC876069	FILTRO CÁRTER	CÁRTER FILTER	FILTRO CÁRTER	FILTRE RENIFLARD
	JOH09-1028B	IMPULSOR	IMPELLER	GIRANTE	TURBINE
	REC875785	TERMOSTATO 70º	THERMOSTAT 70º	TERMOSTATO 70º	THERMOSTAT 70º
	REC3831425	TERMOSTATO 76º	THERMOSTAT 76º	TERMOSTATO 76º	THERMOSTAT 76º
	RM966953	CORREA	BELT	CINGHIA	COURROIE
TAMD71A, B TAMD72A, P-A	REC847741	FILTRO ACEITE	OIL FILTER	FILTRO OLIO	FILTRE A HUILE
	REC3827069	FILTRO ACEITE BY-PASS	OIL FILTER BY-PASS	FILTRO OLIO BY-PASS	FILTRE A HUILE BY-PASS
	REC21492771	FILTRO COMBUSTIBLE	FUEL FILTER	FILTRO COMBUSTIBILE	FILTRE A CARBURANT
	REC876185	FILTRO AIRE	AIR FILTER	FILTRO ARIA	FILTRE A AIR
	REC876069	FILTRO CÁRTER	CÁRTER FILTER	FILTRO CÁRTER	FILTRE RENIFLARD
	JOH09-819B	IMPULSOR	IMPELLER	GIRANTE	TURBINE
	REC3839110	TERMOSTATO	THERMOSTAT	TERMOSTATO	THERMOSTAT
	RM967193	CORREA	BELT	CINGHIA	COURROIE
TAMD73A, P-A, W, TAMD74P-	REC847741	FILTRO ACEITE	OIL FILTER	FILTRO OLIO	FILTRE A HUILE
	REC3827069	FILTRO ACEITE BY-PASS	OIL FILTER BY-PASS	FILTRO OLIO BY-PASS	FILTRE A HUILE BY-PASS
	REC21492771	FILTRO COMBUSTIBLE	FUEL FILTER	FILTRO COMBUSTIBILE	FILTRE A CARBURANT
	RM3838952	FILTRO AIRE	AIR FILTER	FILTRO ARIA	FILTRE A AIR
	REC876069	FILTRO CÁRTER	CÁRTER FILTER	FILTRO CÁRTER	FILTRE RENIFLARD
	JOH09-819B	IMPULSOR	IMPELLER	GIRANTE	TURBINE
	REC875785	TERMOSTATO 70º	THERMOSTAT 70º	TERMOSTATO 70º	THERMOSTAT 70º
	REC3831425	TERMOSTATO 76º	THERMOSTAT 76º	TERMOSTATO 76º	THERMOSTAT 76º
	REC866653	CORREA	BELT	CINGHIA	COURROIE
MD100A, B TMD100A	REC127695-35150	FILTRO ACEITE	OIL FILTER	FILTRO OLIO	FILTRE A HUILE
	REC21492771	FILTRO COMBUSTIBLE	FUEL FILTER	FILTRO COMBUSTIBILE	FILTRE A CARBURANT
	REC842280	FILTRO AIRE	AIR FILTER	FILTRO ARIA	FILTRE A AIR
	REC876069	FILTRO CÁRTER	CÁRTER FILTER	FILTRO CÁRTER	FILTRE RENIFLARD
	JOH09-819B	IMPULSOR	IMPELLER	GIRANTE	TURBINE
	REC875785	TERMOSTATO 70º	THERMOSTAT 70º	TERMOSTATO 70º	THERMOSTAT 70º
	REC3831425	TERMOSTATO 76º	THERMOSTAT 76º	TERMOSTATO 76º	THERMOSTAT 76º
	REC57-36356	CORREA ALTERNADOR	BELT ALTERNATOR	CINGHIA ALTERNATORE	COURROIE ALTERNATEUR
	GDY15335	CORREA BOMBA	BELT PUMP	CINGHIA POMPA	COURROIE POMPE
TMD100C TMD102A	REC21707134	FILTRO ACEITE	OIL FILTER	FILTRO OLIO	FILTRE A HUILE
	REC21492771	FILTRO COMBUSTIBLE	FUEL FILTER	FILTRO COMBUSTIBILE	FILTRE A CARBURANT
	REC842280	FILTRO AIRE	AIR FILTER	FILTRO ARIA	FILTRE A AIR
	REC876069	FILTRO CÁRTER	CÁRTER FILTER	FILTRO CÁRTER	FILTRE RENIFLARD
	JOH09-819B	IMPULSOR	IMPELLER	GIRANTE	TURBINE
	REC875785	TERMOSTATO 70º	THERMOSTAT 70º	TERMOSTATO 70º	THERMOSTAT 70º
	REC3831425	TERMOSTATO 76º	THERMOSTAT 76º	TERMOSTATO 76º	THERMOSTAT 76º
	GDY15335	CORREA BOMBA	BELT PUMP	CINGHIA POMPA	COURROIE POMPE

		REF				
TAMD102A-D TAMD103A		REC21707134	FILTRO ACEITE	OIL FILTER	FILTRO OLIO	FILTRE A HUILE
		REC21492771	FILTRO COMBUSTIBLE	FUEL FILTER	FILTRO COMBUSTIBILE	FILTRE A CARBURANT
		REC876069	FILTRO CÁRTER	CÁRTER FILTER	FILTRO CÁRTER	FILTRE RENIFLARD
		JOH09-819B	IMPULSOR	IMPELLER	GIRANTE	TURBINE
		REC875785	TERMOSTATO 70º	THERMOSTAT 70º	TERMOSTATO 70º	THERMOSTAT 70º
		REC3831425	TERMOSTATO 76º	THERMOSTAT 76º	TERMOSTATO 76º	THERMOSTAT 76º
		GDY15386	CORREA ALTERNADOR	BELT ALTERNATOR	CINGHIA ALTERNATORE	COURROIE ALTERNATEUR
MD120A TMD120A TAMD120A		REC127695-35150	FILTRO ACEITE	OIL FILTER	FILTRO OLIO	FILTRE A HUILE
		REC21492771	FILTRO COMBUSTIBLE	FUEL FILTER	FILTRO COMBUSTIBILE	FILTRE A CARBURANT
		REC842280	FILTRO AIRE	AIR FILTER	FILTRO ARIA	FILTRE A AIR
		REC876069	FILTRO CÁRTER	CÁRTER FILTER	FILTRO CÁRTER	FILTRE RENIFLARD
		JOH09-819B	IMPULSOR	IMPELLER	GIRANTE	TURBINE
		REC875785	TERMOSTATO 70º	THERMOSTAT 70º	TERMOSTATO 70º	THERMOSTAT 70º
		REC3831425	TERMOSTATO 76º	THERMOSTAT 76º	TERMOSTATO 76º	THERMOSTAT 76º
		GDY15386	CORREA ALTERNADOR	BELT ALTERNATOR	CINGHIA ALTERNATORE	COURROIE ALTERNATEUR
TMD120B		REC21707134	FILTRO ACEITE	OIL FILTER	FILTRO OLIO	FILTRE A HUILE
		REC21492771	FILTRO COMBUSTIBLE	FUEL FILTER	FILTRO COMBUSTIBILE	FILTRE A CARBURANT
		REC842280	FILTRO AIRE	AIR FILTER	FILTRO ARIA	FILTRE A AIR
		REC876069	FILTRO CÁRTER	CÁRTER FILTER	FILTRO CÁRTER	FILTRE RENIFLARD
		REC875785	TERMOSTATO 70º	THERMOSTAT 70º	TERMOSTATO 70º	THERMOSTAT 70º
		REC3831425	TERMOSTATO 76º	THERMOSTAT 76º	TERMOSTATO 76º	THERMOSTAT 76º
		GDY15386	CORREA ALTERNADOR	BELT ALTERNATOR	CINGHIA ALTERNATORE	COURROIE ALTERNATEUR
TAMD120B		REC21707134	FILTRO ACEITE	OIL FILTER	FILTRO OLIO	FILTRE A HUILE
		REC21492771	FILTRO COMBUSTIBLE	FUEL FILTER	FILTRO COMBUSTIBILE	FILTRE A CARBURANT
		REC842280	FILTRO AIRE	AIR FILTER	FILTRO ARIA	FILTRE A AIR
		REC876069	FILTRO CÁRTER	CÁRTER FILTER	FILTRO CÁRTER	FILTRE RENIFLARD
		JOH09-819B	IMPULSOR	IMPELLER	GIRANTE	TURBINE
		REC875785	TERMOSTATO 70º	THERMOSTAT 70º	TERMOSTATO 70º	THERMOSTAT 70º
		REC3831425	TERMOSTATO 76º	THERMOSTAT 76º	TERMOSTATO 76º	THERMOSTAT 76º
		GDY15386	CORREA ALTERNADOR	BELT ALTERNATOR	CINGHIA ALTERNATORE	COURROIE ALTERNATEUR
TMD121C		REC21707134	FILTRO ACEITE	OIL FILTER	FILTRO OLIO	FILTRE A HUILE
		REC21492771	FILTRO COMBUSTIBLE	FUEL FILTER	FILTRO COMBUSTIBILE	FILTRE A CARBURANT
		REC842280	FILTRO AIRE	AIR FILTER	FILTRO ARIA	FILTRE A AIR
		REC876069	FILTRO CÁRTER	CÁRTER FILTER	FILTRO CÁRTER	FILTRE RENIFLARD
		JOH09-819B	IMPULSOR	IMPELLER	GIRANTE	TURBINE
		REC875785	TERMOSTATO 70º	THERMOSTAT 70º	TERMOSTATO 70º	THERMOSTAT 70º
		REC3831425	TERMOSTATO 76º	THERMOSTAT 76º	TERMOSTATO 76º	THERMOSTAT 76º
		GDY15386	CORREA ALTERNADOR	BELT ALTERNATOR	CINGHIA ALTERNATORE	COURROIE ALTERNATEUR
TAMD121C-D TMD122A TAMD122A-F TAMD122C		REC21707134	FILTRO ACEITE	OIL FILTER	FILTRO OLIO	FILTRE A HUILE
		REC21492771	FILTRO COMBUSTIBLE	FUEL FILTER	FILTRO COMBUSTIBILE	FILTRE A CARBURANT
		REC842280	FILTRO AIRE	AIR FILTER	FILTRO ARIA	FILTRE A AIR
		REC876069	FILTRO CÁRTER	CÁRTER FILTER	FILTRO CÁRTER	FILTRE RENIFLARD
		REC875785	TERMOSTATO 70º	THERMOSTAT 70º	TERMOSTATO 70º	THERMOSTAT 70º
		REC3831425	TERMOSTATO 76º	THERMOSTAT 76º	TERMOSTATO 76º	THERMOSTAT 76º
		GDY15386	CORREA ALTERNADOR	BELT ALTERNATOR	CINGHIA ALTERNATORE	COURROIE ALTERNATEUR
TAMD122P-A, D		REC847741	FILTRO ACEITE	OIL FILTER	FILTRO OLIO	FILTRE A HUILE
		REC21492771	FILTRO COMBUSTIBLE	FUEL FILTER	FILTRO COMBUSTIBILE	FILTRE A CARBURANT
		REC842280	FILTRO AIRE	AIR FILTER	FILTRO ARIA	FILTRE A AIR
		REC876069	FILTRO CÁRTER	CÁRTER FILTER	FILTRO CÁRTER	FILTRE RENIFLARD
		GDY15386	CORREA ALTERNADOR	BELT ALTERNATOR	CINGHIA ALTERNATORE	COURROIE ALTERNATEUR
2001, 2022, 2003, 2003T		REC834337	FILTRO ACEITE	OIL FILTER	FILTRO OLIO	FILTRE A HUILE
		REC829913	FILTRO COMBUSTIBLE	FUEL FILTER	FILTRO COMBUSTIBILE	FILTRE A CARBURANT
		REC838929	ÁNODO MOTOR	ENGINE ANODE	ANODO MOTORE	ANODE MOTEUR
	2001, 2002, 2003	JOH09-808B	IMPULSOR	IMPELLER	GIRANTE	TURBINE
	2003T	JOH09-1027B	IMPULSOR	IMPELLER	GIRANTE	TURBINE
		REC877355	TERMOSTATO 62º	THERMOSTAT 70º	TERMOSTATO 70º	THERMOSTAT 70º
		RM875795	TERMOSTATO (74º circuito cerrado)	THERMOSTAT (74º fresh water)	TERMOSTATO (74º con circuito chiuso)	THERMOSTAT 74º (circuit fermé)
	2001	REC966903	CORREA	BELT	CINGHIA	COURROIE
	2002, 2003	REC966900	CORREA	BELT	CINGHIA	COURROIE
	2003T	REC966906	CORREA	BELT	CINGHIA	COURROIE
MD2010 MD2020 MD2030 MD2040	2010, 2020	REC861473	FILTRO ACEITE	OIL FILTER	FILTRO OLIO	FILTRE A HUILE
	2030, 2040	RM3840525	FILTRO ACEITE	OIL FILTER	FILTRO OLIO	FILTRE A HUILE
		REC861477	FILTRO COMBUSTIBLE	FUEL FILTER	FILTRO COMBUSTIBILE	FILTRE A CARBURANT
	2020, 2030, 2040	REC3580509	FILTRO AIRE	AIR FILTER	FILTRO ARIA	FILTRE A AIR
	MD2010 (-5101203008), MD2020 (-5101309052)	JOH09-806B	IMPULSOR	IMPELLER	GIRANTE	TURBINE
	MD2010 (5101203009+)	JOH09-1026B	IMPULSOR	IMPELLER	GIRANTE	TURBINE
	MD2020 (5101309053+), MD2030/2040	JOH09-1026B	IMPULSOR	IMPELLER	GIRANTE	TURBINE
	2010, 2020	RM861911	TERMOSTATO	THERMOSTAT	TERMOSTATO	THERMOSTAT
	2030, 2040	RM3580365	TERMOSTATO	THERMOSTAT	TERMOSTATO	THERMOSTAT
	MD2010A/B/C, MD2020A/B/C	RM973534	CORREA	BELT	CINGHIA	COURROIE
	MD2030A/B/C	REC978482	CORREA	BELT	CINGHIA	COURROIE
	MD2040A/B/C	RM967114	CORREA	BELT	CINGHIA	COURROIE

		REF				
D1-13 D1-20		REC861473	FILTRO ACEITE	OIL FILTER	FILTRO OLIO	FILTRE A HUILE
		REC861477	FILTRO COMBUSTIBLE	FUEL FILTER	FILTRO COMBUSTIBILE	FILTRE A CARBURANT
		JOH09-1026B	IMPULSOR	IMPELLER	GIRANTE	TURBINE
		RM3842015	TERMOSTATO	THERMOSTAT	TERMOSTATO	THERMOSTAT
		RM3809625	CORREA	BELT	CINGHIA	COURROIE
D1-30 D2-40		REC3840525	FILTRO ACEITE	OIL FILTER	FILTRO OLIO	FILTRE A HUILE
		REC861477	FILTRO COMBUSTIBLE	FUEL FILTER	FILTRO COMBUSTIBILE	FILTRE A CARBURANT
		JOH09-1026B	IMPULSOR	IMPELLER	GIRANTE	TURBINE
		RM3842015	TERMOSTATO	THERMOSTAT	TERMOSTATO	THERMOSTAT
	D1-30	RM3812159	CORREA	BELT	CINGHIA	COURROIE
	D2-40	RM21314684	CORREA	BELT	CINGHIA	COURROIE
D2-50 D2-55 D2-60 D2-75		REC3840525	FILTRO ACEITE	OIL FILTER	FILTRO OLIO	FILTRE A HUILE
		REC861477	FILTRO COMBUSTIBLE	FUEL FILTER	FILTRO COMBUSTIBILE	FILTRE A CARBURANT
		REC3580509	FILTRO AIRE	AIR FILTER	FILTRO ARIA	FILTRE A AIR
		JOH09-1027B	IMPULSOR	IMPELLER	GIRANTE	TURBINE
		RM888624	TERMOSTATO	THERMOSTAT	TERMOSTATO	THERMOSTAT
	D2-55	RM967114	CORREA	BELT	CINGHIA	COURROIE
	D2-75	RM3584086	CORREA	BELT	CINGHIA	COURROIE
D3, (-MY2009)		REC8692305	FILTRO ACEITE	OIL FILTER	FILTRO OLIO	FILTRE A HUILE
		RM31261191	FILTRO COMBUSTIBLE	FUEL FILTER	FILTRO COMBUSTIBILE	FILTRE A CARBURANT
		REC21646645	FILTRO AIRE Redondo	AIR FILTER Round	FILTRO ARIA Rotondo	FILTRE A AIR rond
		REC21171277	FILTRO AIRE Cuadrado	AIR FILTER Square	FILTRO ARIA Quadrato	FILTRE A AIR carré
		CEF500178G	IMPULSOR	IMPELLER	GIRANTE	TURBINE
		REC3840816	TERMOSTATO	THERMOSTAT	TERMOSTATO	THERMOSTAT
		REC30731809	CORREA	BELT	CINGHIA	COURROIE
D3, (MY2010+)		REC30788490	FILTRO ACEITE	OIL FILTER	FILTRO OLIO	FILTRE A HUILE
		RM21139810	FILTRO COMBUSTIBLE	FUEL FILTER	FILTRO COMBUSTIBILE	FILTRE A CARBURANT
		REC21379288	FILTRO AIRE	AIR FILTER	FILTRO ARIA	FILTRE A AIR
		CEF500178G	IMPULSOR	IMPELLER	GIRANTE	TURBINE
		REC3840816	TERMOSTATO	THERMOSTAT	TERMOSTATO	THERMOSTAT
		REC30731809	CORREA	BELT	CINGHIA	COURROIE
D4 D6		REC3582732	FILTRO ACEITE	OIL FILTER	FILTRO OLIO	FILTRE A HUILE
		REC21632901	FILTRO ACEITE BY-PASS	OIL FILTER BY-PASS	FILTRO OLIO BY-PASS	FILTRE A HUILE BY-PASS
	-MY2019	REC3583443	FILTRO COMBUSTIBLE	FUEL FILTER	FILTRO COMBUSTIBILE	FILTRE A CARBURANT
	MY2020+	RM23954708	FILTRO COMBUSTIBLE	FUEL FILTER	FILTRO COMBUSTIBILE	FILTRE A CARBURANT
		REC3584145	FILTRO CÁRTER	CÁRTER FILTER	FILTRO CÁRTER	FILTRE CARTER
		REC21702999	FILTRO AIRE	AIR FILTER	FILTRO ARIA	FILTRE À AIR
	SN407905	REC838929	ÁNODO MOTOR	MOTOR ANODE	ANODO MOTORE	ANODE MOTEUR
	AQ	TEN00745 TEN00745AL	ÁNODO ESCAPE	ANODO EXHAUST PIPE	ANODO SCARICO	ANODE D'ÉCHAPPEMENT
	D-4A, D-4D, AQ, IPS	CEF500114T	IMPULSOR	IMPELLER	GIRANTE	TURBINE
	D-4E, D-4F, AQ, IPS	JOH09-1028B	IMPULSOR	IMPELLER	GIRANTE	TURBINE
	D-6A, D-6D, AQ, IPS	JAB17018-0001	IMPULSOR	IMPELLER	GIRANTE	TURBINE
	D-6E, D-6F, AQ, IPS	JOH09-821B	IMPULSOR	IMPELLER	GIRANTE	TURBINE
		REC8149182	TERMOSTATO	THERMOSTAT	TERMOSTATO	THERMOSTAT
		RM21405494	CORREA	BELT	CINGHIA	COURROIE

MATERIALES GENÉRICOS PARA REVISIÓN — GENERIC MATERIALS FOR REVISION — MATERIALI GENERICI REVIEW — MATÉRIAUX GÉNÉRIQUES POUR L'EXAMEN

REF				
GS90012	IMPRIMACIÓN PARA MOTOR	SPRAY PRIMER	PRIMER PER MOTORI	PRIMER POUR MOTEUR
PS111044	PINTURA MOTOR GRIS (1995)	GREY ENGINE PAINTS (1995)	PITTURE MOTORE GRIGIO (1995)	PEINTURE MOTEUR GRIS (1995)
GS90034	PINTURA GRIS AQUAMATIC	GREY ENGINE PAINTS AQUAMATIC	PITTURE MOTORE GRIGIO AQUAMATIC	PEINTURE GRIS AQUAMATIC
GS90005	PINTURA MOTOR ROJO (1972+)	RED ENGINE PAINTS (1972+)	PITTURE MOTORE ROSSO (1972+)	PEINTURE MOTEUR ROUGE (1972+)
GS90007	PINTURA MOTOR VERDE AGUA (1972+)	GREEN WATER ENGINE PAINTS (1972+)	PITTURE MOTORE VERDE ACQUA (1972+)	PEINTURE MOTEUR VERT EAU (1972+)
GS90029	PINTURA GRIS AQUAMATIC 89	GREY ENGINE PAINTS AQUAMATIC 89	PITTURE MOTORE GRIGIO AQUAMATIC 89	PEINTURE GRIS AQUAMATIC 89
GS90003	PINTURA GRIS METAL SX/DPX	GREY METAL ENGINE PAINTS SX/DPX	PITTURE MOTORE GRIGIO METALLIZZATTO SX/DPX	PEINTURE GRIS MÉTAL. SX/DPX
GS90019	BARNIZ TRANSPARENTE PROTECTOR PINTURA EN SPRAY	CLEAR VARNISH, SPRAY PAINT PROTECTOR	VERNICE TRASPARENTE, PROTETTORE DI PITTURA. SPRAY	VERNIS TRANSPARENT, PROTECTEUR
GS90090	PROTECTOR ÓXIDO MOTOR EN SPRAY	SPRAY ENGINE PROTECTOR FROM RUST	PROTETTORE MOTORE DALL'OSSIDAZIONE. SPRAY	PROTECTION MOTEUR CONTRE L'OXYDATION
GS90092	PROTECTOR DIELÉCTRICO EN SPRAY	SPRAY DIELECTRIC PROTECTOR	PROTETTORE DIELETTRICO. SPRAY	PROTECTEUR DIELECTRIQUE
LUB11404	BOTE GRASA MARINA 450 g	MARINE GREASE 450 g	GRASSO MARINO 450 g	GRAISSE MARINE 450 g
LUB11363	GRASA DE LITIO	LITHIUM GREASE	GRASSO AL LITIO	GRAISSE LITHIUM

GUÍA MANTENIMIENTO TRASMISIONES | GUIDE MAINTENANCE TRANSMISSIONS | GUIDA MANUTENZIONE TRASMISSIONI | GUIDE MAINTENANCE TRANSMISSIONS



	REF	OEM				
110S	REC22303438	22303438	PLACA CUBIERTA CONTRA CASCO	COVER PLATE AGAINTS HULL	COPERCHIO PIATTO CONTRO SCAFO	JOINTCOLERETTE SAIL DRIVE
	REC877362	21389074	RETÉN DE GOMA	RUBBER SEAL	PARAOLIO IN GOMMA	KIT SOUFFLET
120S,S-B, S-C, S-D, S-E	REC22303438	854932	PLACA CUBIERTA CONTRA CASCO	COVER PLATE AGAINTS HULL	COPERCHIO PIATTO CONTRO SCAFO	JOINTCOLERETTE SAIL DRIVE
	REC877362	21389074	RETÉN DE GOMA	RUBBER SEAL	PARAOLIO IN GOMMA	KIT SOUFFLET
270 270T	REC876294	876294	FUELLE TRANSON	DRIVE JOINT BELLOW	CUFFIA TRANSON	SOUFFLET DE CARDAN
	REC875822	875822	MANGUITO (270)	COOLANT HOSE (270)	MANICOTTO (270)	DURITE D'EAU (270)
	REC876631	876631	FUELLE ESCAPE	EXHAUST BELLOW	CUFFIA SCARICO	SOUFFLET D'ECHAPPEMENT
280 280TA, PT	REC876294	876294	FUELLE TRANSON	DRIVE JOINT BELLOW	CUFFIA TRANSON	SOUFFLET DE CARDAN
	REC875822	875822	MANGUITO (280, PT)	COOLANT HOSE (280, PT)	MANICOTTO (280, PT)	DURITE D'EAU (280, PT)
	REC876633	876633	FUELLE ESCAPE	EXHAUST BELLOW	CUFFIA SCARICO	SOUFFLET D'ECHAPPEMENT
280DP	REC876294	876294	FUELLE TRANSON	DRIVE JOINT BELLOW	CUFFIA TRANSON	SOUFFLET DE CARDAN
	REC875822	875822	MANGUITO	COOLANT HOSE	MANICOTTO	DURITE D'EAU
	REC876631	876631	FUELLE ESCAPE	EXHAUST BELLOW	CUFFIA SCARICO	SOUFFLET D'ECHAPPEMENT
290, A 290SP-A, A1, A2, C, C1, E 290DP, A, A1, A2, B, B1, C, C1, D, D1, E	REC876294	876294	FUELLE TRANSON	DRIVE JOINT BELLOW	CUFFIA TRANSON	SOUFFLET DE CARDAN
	RM876632	876632	MANGUITO	COOLANT HOSE	MANICOTTO	DURITE D'EAU
	REC876631	876631	FUELLE ESCAPE	EXHAUST BELLOW	CUFFIA SCARICO	SOUFFLET D'ECHAPPEMENT
DPX-S, S1, R, A, G	REC876294	876294	FUELLE TRANSON	DRIVE JOINT BELLOW	CUFFIA TRANSON	SOUFFLET DE CARDAN
	REC3860384	3860384	FUELLE TRANSON (A, AG)	DRIVE JOINT BELLOW (A, AG)	CUFFIA TRANSON (A, AG)	SOUFFLET D'ECHAPPEMENT
	RM876632	876632	MANGUITO	COOLANT HOSE	MANICOTTO	DURITE D'EAU
	REC876631	876631	FUELLE ESCAPE	EXHAUST BELLOW	CUFFIA SCARICO	SOUFFLET D'ECHAPPEMENT
DPH- A,B,C DPR-A	REC3808898	3594509	FUELLE TRANSON	DRIVE JOINT BELLOW	CUFFIA TRANSON	SOUFFLET DE CARDAN
	RM21132674	21132674	KIT FUELLE (CILINDROS DIRECCIÓN)	ANTI-BARNACLE BELLOW KIT (STEERING CYLINDERS)	KIT CUFFIE (CILINDRI STERZO)	KIT SOUFFLETS (CILINDRE DIRECTION)
	CEF500538K	3588753	FUELLE ESCAPE	EXHAUST BELLOW	CUFFIA SCARICO	SOUFFLET D'ECHAPPEMENT
SX-M DP-SM XDP	REC3850426	3850426	KIT FUELLE ESCAPE (SX-M)	BELLOW KIT, EXHAUST (SX-M)	KIT CUFFIA, SCARICO (SX-M)	KIT SOUFFLET D'ECHAPPE-MENT (SX-M)
	RM21277185	21277185	KIT FUELLE (XDP)	BELLOW KIT, DRIVE (XDP)	KIT CUFFIA (XDP)	KIT SOUFFLET (XDP)
	RM3885870	388587	KIT FUELLE ESCAPE (XDP)	BELLOW KIT, EXHAUST (XDP)	KIT CUFFIA, SCARICO (XDP)	SOUFFLET ECHAPPEMENT, KIT (XDP)
SX DPS	REC3841481	22197130	FUELLE TRANSON	DRIVE JOINT BELLOW	CUFFIA TRANSON	SOUFFLET DE CARDAN
	REC3850426	3850426	FUELLE ESCAPE	EXHAUST BELLOW	CUFFIA SCARICO	SOUFFLET ÉCHAPPEMENT
SX-A DPS-A, B	RM22197130	22197130	FUELLE TRANSON	DRIVE JOINT BELLOW	CUFFIA TRANSON	SOUFFLET DE CARDAN
	REC3888916	3888916	FUELLE ESCAPE	EXHAUST BELLOW	CUFFIA SCARICO	SOUFFLET ÉCHAPPEMENT
DPG	REC876294	876294	FUELLE TRANSON	DRIVE JOINT BELLOW	CUFFIA TRANSON	SOUFFLET DE CARDAN
	REC3860384	3860384	FUELLE ESCAPE	EXHAUST BELLOW	CUFFIA SCARICO	SOUFFLET D'ECHAPPEMENT
	RM876632	876632	MANGUITO	COOLANT HOSE	MANICOTTO	DURITE D'EAU

KITS MANTENIMIENTO COLAS | DRIVES MAINTENANCE KIT | KIT MANUTENZIONE PIEDE | KITS D'ENTRETIEN DES EMBASSES



		REF					Un.
SX-A	RECKITSXA	CEF500536K	FUELLE ESCAPE	EXHAUST BELOW	MANICOTTO SCARICO	SOUFFLET D'ECHAPPEMENT	1
		RECKITVSXAAL	KIT ÁNODOS AL	ANODES KIT AL	KIT ANODI AL	KIT ANODES AL	1
		RM22197130	FUELLE TRANSMISION	BELLOWS	MANICOTTO TRASMISSIONE	SOUFFLET DE CARDAN	1
SP-E	RECKITSPE	REC876294	FUELLE TRANSON	BELOW	MANICOTTO TRANSON	SOUFFLET DE CARDAN	1
		REC876631	FUELLE ESCAPE	EXHAUST BELOW	MANICOTTO SCARICO	SOUFFLET ECHAPPEMENT	1
		RECKITV290AL	KIT ÁNODOS AL	ANODES KIT AL	KIT ANODI AL	KIT ANODES AL	1
		REC17276	PIN	PIN	FERMO	GOUPILLE	1
		REC872096	CASQUILLOS HORQUILLA	TILT BUSHING	GHIERA FORCELLA	BAGUES	2
		REC897682	JUNTA	GASKET	GUARNIZIONE	JOINT	1
		REC955974	ARO TÓRICO	O-RING	FASCIA TONDA	JOINT TORIQUE	1
		REC955989	ARO TÓRICO	O-RING	FASCIA TONDA	JOINT TORIQUE	1
DPS-SX	RECKITDPS-SX	REC25-30613	ARO TÓRICO	O-RING	FASCIA TONDA	JOINT TORIQUE	2
		REC3850426	FUELLE ESCAPE	EXHAUST BELOW	MANICOTTO SCARICO	SOUFFLET ECHAPPEMENT	1
		REC3852045	ARO TÓRICO	O-RING	FASCIA TONDA	JOINT TORIQUE	1
		RECKITVSXAL	KIT ÁNODOS AL	ANODES KIT AL	KIT ANODI AL	KIT ANODES AL	1
		REC3852056	PIN	PIN	FERMO	GOUPILLE	1
		REC3852560	RETEN GOMA	RUBBER SEAL	PARAOLIO GOMMA	JOINT CAOUTCHOUC	1
		REC3855081	JUNTA	GASKET	GUARNIZIONE	JOINT	1
		REC955981	ARO TÓRICO	O-RING	FASCIA TONDA	JOINT TORIQUE	1
		REC3841481	FUELLE TRANSOM	U-JOINT BELOW	CUFFIA TRANSON	SOUFFLET DE CARDAN	1
DPR	RECKITDPR	CEF500537K	FUELLE TRANSMISION	BELLOWS	MANICOTTO TRASMISSIONE	SOUFFLET DE CARDAN	1
		CEF500538K	FUELLE ESCAPE	EXHAUST BELOW	MANICOTTO SCARICO	SOUFFLET ECHAPPEMENT	1
		RECKITVDPHAL	ÁNODO	ANODE	ANODO	ANODE	1
		RECKITVDPHAL	ÁNODO	ANODE	ANODO	ANODE	1
DPH	RECKITDPH	CEF500537K	FUELLE TRANSMISION	BELLOWS	MANICOTTO TRASMISSIONE	SOUFFLET DE CARDAN	1
		CEF500538K	FUELLE ESCAPE	EXHAUST BELOW	MANICOTTO SCARICO	SOUFFLET ECHAPPEMENT	1
		RECKITVDPHAL	KIT ÁNODOS AL	ANODES KIT AL	KIT ANODI AL	KIT ANODES AL	1
DPC-D-E	RECKITDPC-D-E	REC876294	FUELLE TRANSON	BELOW KIT	MANICOTTO TRANSON	SOUFFLET DE CARDAN	1
		REC876631	FUELLE ESCAPE	EXHAUST BELOW	MANICOTTO SCARICO	SOUFFLET ECHAPPEMENT	1
		RECKITV290DPAL	KIT ÁNODOS AL	ANODES KIT AL	KIT ANODI AL	KIT ANODES AL	1
		REC17276	PIN	PIN	FERMO	GOUPILLE	1
		REC872096	CASQUILLOS HORQUILLA	TILT BUSHING	GHIERA FORCELLA	BAGUES	2
		REC897682	JUNTA	GASKET	GUARNIZIONE	JOINT	1
		REC955974	ARO TÓRICO	O-RING	FASCIA TONDA	JOINT TORIQUE	1
		REC955989	ARO TÓRICO	O-RING	FASCIA TONDA	JOINT TORIQUE	1
290SP	RECKIT290SP	REC876294	FUELLE TRANSON	BELOW KIT	MANICOTTO TRANSON	SOUFFLET DE CARDAN	1
		REC876631	FUELLE ESCAPE	EXHAUST BELOW	MANICOTTO SCARICO	SOUFFLET ECHAPPEMENT	1
		RECKITV290AL	KIT ÁNODOS AL	ANODES KIT AL	KIT ANODI AL	KIT ANODES AL	1
		REC17276	PIN	PIN	FERMO	GOUPILLE	1
		REC125017	ARO TÓRICO	O-RING	FASCIA TONDA	JOINT TORIQUE	1
		REC876278	CASQUILLOS HORQUILLA	PLASTIC BUSHING	GHIERA FORCELLA	BAGUES	2
		REC876279	CASQUILLOS HORQUILLA	TILT BUSHING	GHIERA FORCELLA	BAGUES	2
		REC897682	JUNTA	GASKET	GUARNIZIONE	JOINT	1
		REC955974	ARO TÓRICO	O-RING	FASCIA TONDA	JOINT TORIQUE	1
		REC955989	ARO TÓRICO	O-RING	FASCIA TONDA	JOINT TORIQUE	1
290DP	RECKIT290DP	REC876294	FUELLE TRANSON	BELOW KIT	MANICOTTO TRANSON	SOUFFLET DE CARDAN	1
		REC876631	FUELLE ESCAPE	EXHAUST BELOW	MANICOTTO SCARICO	SOUFFLET ECHAPPEMENT	1
		RECKITV290DPAL	KIT ÁNODOS AL	ANODES KIT AL	KIT ANODI AL	KIT ANODES AL	1
		REC17276	PIN	PIN	FERMO	GOUPILLE	1
		REC876278	CASQUILLOS HORQUILLA	PLASTIC BUSHING	GHIERA FORCELLA	BAGUES	2
		REC876279	CASQUILLOS HORQUILLA	TILT BUSHING	GHIERA FORCELLA	BAGUES	2
		REC897682	JUNTA	GASKET	GUARNIZIONE	JOINT	1
		REC955974	ARO TÓRICO	O-RING	FASCIA TONDA	JOINT TORIQUE	1
		REC955989	ARO TÓRICO	O-RING	FASCIA TONDA	JOINT TORIQUE	1
280DP	RECKIT280DP	REC876294	FUELLE TRANSON	BELOW KIT	MANICOTTO TRANSON	SOUFFLET DE CARDAN	1
		REC876631	FUELLE ESCAPE	EXHAUST BELOW	MANICOTTO SCARICO	SOUFFLET ECHAPPEMENT	1
		RECKITV280DPAL	KIT ÁNODOS AL	ANODES KIT AL	KIT ANODI AL	KIT ANODES AL	1
		REC17276	PIN	PIN	FERMO	GOUPILLE	1
		REC876278	CASQUILLOS HORQUILLA	PLASTIC BUSHING	GHIERA FORCELLA	BAGUES	2
		REC897682	JUNTA	GASKET	GUARNIZIONE	JOINT	1
		REC955974	ARO TÓRICO	O-RING	FASCIA TONDA	JOINT TORIQUE	1
		REC955989	ARO TÓRICO	O-RING	FASCIA TONDA	JOINT TORIQUE	1

SISTEMA DE ALIMENTACIÓN Y FILTRACIÓN
FUEL & FILTRATION SYSTEM
SISTEMA DI ALIMENTAZIONE E FILTRAZIONE
SYSTÈME D'ALIMENTATION ET DE FILTRATION

MOTORES GASOLINA | GAS ENGINE | MOTORI BENZINA | MOTEUR ESSENCE

GAS

FILTRO DE COMBUSTIBLE Y ELEMENTOS | FUEL FILTERS AND ELEMENTS | FILTRI BENZINA E RACCORDI | FILTRE A ESSENCE ET CARTOUCHE DE RECHANGE

BRACKET | BRACKET | SUPPORTO | TÊTE DE FILTRE À ESSENCE

Con 2 tapones de bronce y 2 tubos de extensión. (2 entradas y 2 salidas).

With 2 brass plugs and 2 extension tubes. (2 inputs & 2 outputs).

Con 2 tappi di bronzo e 2 tubi di estensione. (2 ingressi entrata carburante e 2 uscite carburante).

Avec 2 bouchons en bronze et 2 tubes d'extension. (2 entrées et 2 sorties).

REF		
REC25000	1/4"	AL
REC25010	1/4"	INOX /SS AISI316
REC25020	3/8"	AL
REC25030	3/8"	INOX /SS AISI316
RECOBBRACKET	1/4"	Plast.





REC25000 - REC25020



REC25010 - REC25030



RECOBBRACKET

FILTRO COMBUSTIBLE SEPARADOR DE AGUA | WATER SEPARATING FUEL FILTER | FILTRO SEPARATORE ACQUA-BENZINA | FILTRE À ESSENCE

REF	MICRON	
RACPFF5510	10	$4^{7/16}$"

RACOR



REF	MICRON	
REC24942	10	$4^{7/16}$" = 11 cm
REC35-802893Q01	10	$3^{3/4}$"
REC855686	28	$4^{7/16}$"
REC35-802893Q	25	$3^{3/4}$"
RACPFF5510	10	$4^{7/16}$"

Recmar



REC24942



REC35-802893Q01



REC855686



REC35-802893Q

FILTRO CON BRACKET | OEM FILTER WITH BRACKET | FILTRO BENZINA CON SUPPORTO | FILTRE A ESSENCE AVEC SUPPORT

Con 2 tapones de bronce y 1 tubo de extensión.

With 2 brass plugs & 1 extension tube.

Con 2 tappi di bronzo e 1 tubo di estensione.

avec 2 bouchons en bronze et 1 tube d'extension

REF	MICRON			BRACKET
REC24950	25	1/4"	50 GPH	AL
REC24952	10	1/4"	50 GPH	AL

Recmar



FILTRO DECANTADOR GASOLINA — COMPLETE FUEL FILTER — FILTRO DECANTATORE BENZINA — FILTRE DÉCANTEUR POUR ESSENCE

RACOR



				RAC120R-RAC-01	RAC320R-RAC-01	RAC320R-INOX-01	RAC320R-RAC-02
FLUJO MÁXIMO	MAX. FLOW	FLUSSO MASSIMO	FLUX MASSIMALE	114 l/h 30 gph	340 l/h 60 gph	340 l/h 60 gph	340 l/h 60 gph
ELEMENTO	ELEMENT	ELEMENTO	ÉLÉMENT	RACS3240	RACS3213	RACS3213	RACS3220UL
CAZOLETA TRANSPARENTE (sólo se recomienda para fueraborda.)	CLEAR BOWL (just for outboards)	VASCHETTA TRASPARENTE (solo nei fuoribordo.)	CAZOLETA TRANSPARENTE (uniquement recommandé pour le hors-bord.)	✔ PLAST.	✔ PLAST.	✔ PLAST.	✘ METAL.
ROSCAS CENTRALES	CENTRAL THREADS	FILETTO CENTRALE	FILS CENTRAUX	M18 x 1.5	1 1/4"	1 1/4"	1 1/4"
TAMAÑO ROSCA CABEZA	HEAD PORT SIZE	DIMENSIONE VITE TESTA	TAILLE DU FIL DE TÊTE	1/4-18 NPTF	1/4-18 NPTF	1/4-18 NPTF	1/4-18 NPTF
ALTURA X Ø	HEIGHT X Ø	ALTEZZA X Ø	HAUTEUR X Ø	166 x 81 x 81 mm	238 x 102 x 102 mm	238 x 102 x 102 mm	238 x 102 x 102 mm
PESO	WEIGHT	PESO	POIDS	0,5 kg	0,9 kg	0,9 kg	0,9 kg
CAIDA DE PRESIÓN	PRESSURE DROP	CADUTA DI PRESSIONE	CHUTE DE PRESSION	0.15 PSI 0.01 bar	0.61 PSI 0.04 bar	0.61 PSI 0.04 bar	0.61 PSI 0.04 bar
PRESIÓN MÁXIMA	MAX. PRESSURE	PRESSIONE MASSIMA	PRESSION MAXIMALE	7 PSI 0.05 bar	7 PSI 0.05 bar	7 PSI 0.05 bar	7 PSI 0.05 bar
DESMONTAJE CARTUCHO-CAZOLETA	ELEMENT REMOVAL UNDERBOWL	RIMOZIONE DELLA CARTUCCIA	DÉMONTAGE DE LA CARTOUCHE	25,4 mm 1"	25,4 mm 1"	25,4 mm 1"	25,4 mm 1"
TEMPERATURA DE TRABAJO	OPERATING TEMPERATURE	TEMPERATURA DI LAVORO	TEMPERATURE DE TRAVAIL	-40°C +124°C			

ELEMENTOS DE RECAMBIO — ELEMENT — ELEMENTI DI RICAMBIO — CARTOUCHE DE RECHANGE

REF	OEM	
RACS3240 LENS3240		RAC120R-RAC-01
RACS3227 LENS3227	35-886638	
RACS3213		RAC320R-RAC-01
LENS3213	35-809097	RAC320R-RAC-01 INOX RAC320R-RAC-03
RACS3214	35-809099	
RACS3228UL		RAC320R-RAC-02, bracket RACOR



LENS3240
LENS3227
LENS3214



RACS3240
RACS3227
RACS3214



RACS3228UL

RÁCORES DE LATÓN — BRASS RACORS — RACCORDI IN OTTONE — RACCORDS EN LAITON

REF	OEM			
GS31066	22-89771Q2	1/4" NPT	5/16" = 7.9 mm	2
GS31067		1/4" NPT	3/8" = 9.5 mm	2

GOLDENSHIP



REF			
GS31065	1/4" NPT	3/8" = 9.5 mm	1
GS31066	1/4" NPT	5/16" = 7.9 mm	2
GS31055	3/8" NPT	3/8" = 9.5 mm	2
GS31056	3/8" NPT	5/16" = 7.9 mm	2
GS31157	3/8" NPT	1/4" = 6.4 mm	2



FILTRO GASOLINA — FUEL FILTER — FILTRO BENZINA — FILTRE À ESSENCE

GAS

REF	OEM	
REC982230	877765 855952 841054	AQ120B, 125, 131, 151, 171, 175A AQ200C, D AQ225B, C, D, E, F 230, 250, 251, 280A, 290A 255A, B 260A, B, C, AV





REF	OEM
RACS3228UL	857633



RECMAR	ORIGIN.	OEM	MICRON	
REC3862228	RM3862228	3862228 3852413 3851218	10	4.3, 5.0, 5.7, 5.8, 7.4, 8.1, 8.2L



RECMAR	ORIGIN.	OEM	MICRON	
REC855686	RM855686-2	855686	28	3.0, 4.3, 5.0, 5.7, 8.1, GXI 430, 431, 432, 434, 500, 501, 570, 571, 572, 740 AQ205, 200, 211, 225, 231, 271, 311 BB225, 231, 260, 261



RECMAR	ORING.	OEM	MICRON		BOMBA PUMP POMPA POMPE
REC3847644	RM3847644	3847644	10	3.0, 4.3, 5.0, 5.7, 8.1, GXI	RM21608511



FILTRO DE GASOLINA CARBURADOR — CARBURETOR FUEL FILTER — FILTRO BENZINA CARBURATORE — FILTRE À ESSENCE DE CARBURATEUR

GAS

REF	OEM	
REC35-53336	835576	AQ175, 200, 226, 266, 290 B200, 225, 260



REF	OEM	CARB.
REC93568		Holley 4 bbl



REF	OEM	
REC40155	3852224	Ford 5.0 / 5.8 Fi, FS

REF	OEM	CARB.
REC984491	3854019	Rochester



FILTRO DE ACEITE — OIL FILTER — FILTRO OLIO — FILTRE A HUILE

REF	OEM	
REC8692305	8692305	4.3L GL-J, GL-JF, GXi-J, GXi-JF 5.0L GXi-J, GXi-JF 5.7L Gi300-J, Gi-300-JF, GXi-J, GXi-JF 8.1L Gi-J, Gi-JF, GXi-J, GXi-JF (2007+)



RECMAR	ORIGIN.	OEM		
REC3850559	RM3850559	3850559	13/16" 16 NPT	4.3 GXI, OSI, GL 5.0 Gi, GL, OSI, GXI 5.7 GS, GSi, GXi, OSI, GL 7.4 Gi, GL, GSi 8.1 Gi, GSi 8.2GL, GSi



RECMAR	ORIGIN.	OEM		
REC3517857	RM3517857	3517857 1266286 418432 430143	3/4" 16 NPT	AQ60, 90, 95, 100, 105, 110, 120, 125, 130, 131, 140, 145, 165, 170, 171 MB20 BB115, 140, 145, 165, 170 230A, B 250A, B 251A



RECMAR	ORIGIN.	OEM		
REC841750	RM841750	841750	18mm x 1.5	AQ175, 205 430A, B 431A, B 432A 434A 4.3 GL,GS,GI



RECMAR	ORIGIN.	OEM		
REC35-06003	RM835440-9	835440 3852030 3852412	13/16" 16 NPT	3.0GL, GS AQ200A, B, C, D 211, 231, 260A, 271, 280A, 290A, 311 225A, B, C, D 500A, B 501A, B 570A, 571A, 572A 740A, B 4.3, 5.0, 5.7, 8.1 GI, GL, GXI 7.4GL, GI, GSI 8.2GSI



RECMAR	OEM		
REC35-06007	835779	3/4" 16 NPT	Con base Ford V8 Bloque pequeño V8 Ford small block Con base Ford V8 blocco piccolo Pour moteur Ford V8, petit bloc AQ190A, 240A 5.0FL, FI 5.8FL, FI, FSI



FILTRO DE COMBUSTIBLE Y ELEMENTOS
FUEL FILTERS AND ELEMENTS
FILTRI BENZINA E RACCORDI
FILTRE A CARBURANT ET CARTOUCHE DE RECHANGE

REF	OEM	
REC829913	829913	MD5B, C MD1B, 2B MD3B (19951+, 20838+, 22578+) MD7B (3080+) MD11C, D (50884+) MD7C, D (16372+) 2001, 2002 2003, T, TB



RECMAR	ORIGIN.	OEM	
REC861477	RM861477	861477 21190113 3580096 3841080	2010A, B, C, D 2020A, B, C, D 2030A, B, C, D 2040A, B, D, D D2-40, 50, 55, 60, 75 D1-13, 20



RECMAR	ORIGIN.	OEM	
REC21139810	RM21139810	21139810	D3-110I-D, I-E, I-F D3-140I-E, I-F, A-D, A-E, A-F D3-150I-D, I-E, I-F D3-170I-D, I-E, I-F, A-D, A-E, A-F D3-200I-D, I-E, I-F, A-D, A-E, A-F D3-220I-D, I-E, I-F, A-D, A-E, A-F



ORIGIN.	OEM	
RM31261191	31261191 8683212	D3-110I-A D3-130A-A, I-A D3-160A-A, I-A D3-190A-B



RECMAR	ORIGIN.	OEM	
REC3840335	RM3840335	21624740 3840335 3588378	AD41A, B, D AD41P, L-A AMD44P-A, P-B, P-C AQAD40A, B AQAD41A AQD40A, 41A D41A, B, D, L-A KAD300A KAD32P-A KAD42A, 42B, P-A KAD44P-A, P-B, P-C KAMD300A KAMD42A, B, P-A KAMD43P-A MD22A, B, L-B, P-B MD40A TAMD22A, P-B TAMD40A, B TAMD41A, B, D, P, L, M, H-A, H-B TMD22A, B, P-C TMD40A, B, C TMD41A, B, D, L-A





RECMAR	ORIGIN.	OEM	
REC21492771	RM21492771	21492771 3825133 466987 829993	AD31A, B, D, AD, P, L-A AQAD30A, 31A AQD70C D5A-T, A-TA, A-BTA D7A-T, A-TA, A-BTA KAD32A MD30A, B, D, AQ MD31A MD6A, B MD70B MD7A, B TAMD102A, D TAMD122C, D TAMD30A, B, D, AQ TAMD31A, B, D, P, L, M, S-A TAMD60A, B, C TAMD61A TAMD62A TAMD63L-A, P-A TAMD70C TAMD71B TAMD72P-A, WJ-A TAMD73P-A, WJ-A TAMD74A-A, A-B, C-A, C-B, L-A, L-B, P-A, P-B TMD100C TMD102KB, KD TMD121C, D TMD30A, B, D, AQ TMD31A, B, D, L-A TMD70C TMD75P-A





RECMAR	ORIGIN.	OEM		SENSOR SENDER SENSORE SENSEUR
REC3583443	RM3583443	3583443 21718912	D-4, A-F D-6, A-F (-MY2019)	REC3808616





RECMAR	OEM	
REC3809721	3809721 21140344	D8, 9, 11, 12, 13



new

ORIGIN.	OEM	
RM23954708	23954708 22984479	D4 D6G (MY2020+)



RECMAR	OEM	
REC22377272	22377272 3888460	D8, 9, 11, 12, 13, 16



ORIGIN.	OEM	
RM3817517	3817517 3839469 3828838	D9 D11A-A, A-B, A-D D12D-A MG, D-A MH, D-B MH, C-A MP, D-A MP



RECMAR	OEM	
REC864315	864315 863750	D5 TAMD71, 74, 102, 103, 122, 162, 165



RECMAR	OEM	
REC876554	876554	MD1A, 1B, 2A, 2B, 3B MD5A, B (19950+, -20837, -22578) MD11C, D (-50883) MD17C, D (-16371)



FILTRO CON CAZOLETA — BOWL FILTERS — FILTRO CON COPPA — FILTRE AVEC COUPE

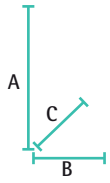



RACOR

	RAC500MA30	RAC900VMA	RAC900MA30	RAC1000VMA	RAC1000MA30	RAC75/500MAX	RAC75/1000MA30
	227 l/h 60 gph	340 l/h 90 gph	341 l/h 90 gph	681 l/h 180 gph	681 l/h 180 gph	454 l/h 120 gph	681 / 1363 l/h 180 / 360 gph
	2010	**2010**	**2040**	**2010**	**2020**	**2010**	**2020**
A X B X C	292 x 147 x 122 mm	432 x 220 x 200 mm	432 x 152 x 178 mm	557 x 220 x 200 mm	559 x 152 x 178 mm	292 x 368 x 241 mm	559 x 476 x 279 mm
	3/4"-16 UNF	7/8"-14 UNF	7/8"-14 UNF	7/8"-14 UNF	7/8"-14 UNF	3/4"-16 UNF	7/8"-14 UNF
KG	2 kg	4,9 kg	3 kg	5,6 kg	5 kg	7,7 kg	13,6 kg
CAIDA DE PRESIÓN PRESSURE DROP CADUTA DI PRESSIONE CHUTE DE PRESSION	0.61 PSI 0.04 bar	0.30 PSI 0.021 bar	0.34 PSI 0.02 bar	0.43 PSI 0.03 bar	0.49 PSI 0.03 bar	0.70 PSI 0.05 bar	3.70 PSI 0.25 bar
MAX	15 PSI 1 bar	15 PSI 1 bar	15 PSI 1 bar	15 PSI 1 bar	15 PSI 1 bar	15 PSI 1 bar	15 PSI 1 bar
MÁX.	102 mm	127 mm	127 mm	254 mm	254 mm	102 mm	254 mm

ELEMENTOS DE RECAMBIO — ELEMENT — ELEMENTI DI RICAMBIO — CARTOUCHE DE RECHANGE

REF 500	REF 900	REF 1000	MICRON
RAC2010SM-OR	RAC2040SM-OR	RAC2020SM-OR	2
RAC2010TM-OR	RAC2040TM-OR	RAC2020TM-OR	10
RAC2010PM-OR	RAC2040PM-OR	RAC2020PM-OR	30

RACOR



S: SECUNDARIO
T: PRIMARIO O SECUNDARIO/FINAL
P: PRIMARIO

S: SECONDARY FINAL
T: PRIMARY OR SECONDARY FINAL
P: PRIMARY

S: SECONDARIO
T: PRIMARIO O SECONDARIO
P: PRIMARIO

S: SECONDAIRE
T: PRIMAIRE OU SECONDAIRE
P: PRIMAIRE

new

REF	OEM		MICRON
REC3581760	3581760	R500MA	30
REC889419	889419	R900MA	
REC889422	889422	R1000MA	

Recmar





REC3581760 REC889419 REC889422

FILTRO DECANTADOR DIESEL — COMPLETE DIESEL FILTER — FILTRO DECANTATORE DIESEL — FILTRE DECANTEUR DIESEL

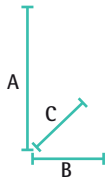

RACOR



	RAC120AS	RAC230R2	RAC245R2	RAC460R2	RAC490R2
	57 l/h 15 gph	114 l/h 30 gph	170 l/h 45 gph	227 l/h 60 gph	341 l/h 90 gph
	RACR12	RACR20	RACR25	RACR60	RACR90
DIESEL	✓	✓	✓	✓	✓
GAS	✓				
CAZOLETA TRANSPARENTE CLEAR BOWL VASCHETTA TRASPARENTE BOL TRASPARENT	✓	✓	✓	✓	✓
INSTALACIÓN VACUÓMETRO VACUUM INSTALLATION INSTALLAZIONE VACUOMETRO INSTALLATION VACUOMETRE	✓	✓	✓	✓	✓
INSTALACIÓN PRESIÓN PRESSURE INSTALLATION INSTALLAZIONE PRESSIONE INSTALLATION PRESSION	✓	✓	✓	✓	✓
A X B X C (mm)	165 x 81 x 81	229 x 102 x 102	267 x 102 x 102	279 x 114 x 121	300 x 114 x 121
KG	0,59 kg	0,90 kg	1 kg	1,3 kg	1,4 kg
CAIDA DE PRESIÓN PRESSURE DROP CADUTA DI PRESSIONE CHUTE DE PRESSION	0.15 PSI 0.01 bar	0.31 PSI 0.02 bar	0.61 PSI 0.04 bar	0.39 PSI 0.03 bar	0.95 PSI 0.06 bar
MAX	7 PSI	30 PSI	30 PSI	30 PSI	30 PSI
	1/4" NPT	1/4" NPT	1/4" NPT	3/8" NPT	3/8'' NPT
BOMBA CEBADO (SÓLO PARA DIESEL) PRIMER PUMP (ONLY DIESEL) POMPA (SOLO PER DIESEL) POMPE (SEULEMENT POUR DIESEL)	✘	✓	✓	✓	✓
Nº TOMAS NUM. OF PORTS N° FORI N° D'ENTREE / SORTIE	4	3	3	4	4
OPCIÓN SENSOR AGUA WATER SENSOR OPTION OPZIONE SENSORE ACQUA OPTION SONDE DE PRESENCE D'EAU	✓	✓	✓	✓	✓

ELEMENTOS DE RECAMBIO — ELEMENT — ELEMENTI DI RICAMBIO — CARTOUCHE DE RECHANGE

REF	MICRON
RACR11T	10



REF	MICRON
RACR12S	2
RACR12T	10
RACR12P	30



REF	MICRON
RACR20S	2
RACR20T	10
RACR20P	30



REF	MICRON
RACR24S	2
RACR24T	10
RACR24P	30



REF	MICRON
RACR25S	2
RACR25T	10
RACR25P	30



REF	MICRON
RACR26S	2
RACR26T	10
RACR26P	30



REF	MICRON
RACR60S	2
RACR60T	10
RACR60P	30



REF	MICRON
RACR90S	2
RACR90T	10
RACR90P	30

REF	MICRON
RACR120SM	2
RACR120TM	10
RACR120P	30



FILTRO DECANTADOR DIESEL — COMPLETE DIESEL FILTER — FILTRO DECANTATORE DIESEL — FILTRE DECANTEUR DIESEL

REF		
REC1140639	REC3581078	50 l/h





Recmar

REF		
REC120	RACR12	50 l/h





D DIESEL

GAS

Recmar

new



Recmar

REF	MICROM			
REC1766160	10	205-420 L/H (2.45PSI)	2 x 11/16" 2 x 10 mm	REC160ELEMENT

new



Recmar

REF	OEM			
REC500MA	22677639 35-850481 35-850481A1	RAC913-08-H6 (13 mm) RAC913-08-H8 (10 mm)	227 l/h	REC3581760 RAC2010TM-OR

new





Recmar

REF		
REC296TWIN	50 L/H	REC3581078

new





Recmar

REF		CUBETA BOWL VASCHETTA SEAU	
REC2656613	50 l/h	G30432 (8mm) GS30433 (10 mm)	METAL.	REC3581078

new



Recmar



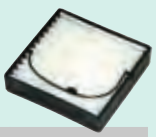

REF			
RECSWK-2000/10	600 L/H	M22X1.5	RECGS01030
RECSWK-2000/5	300 L/H	M162X1.5	RECGS00530

FILTROS TIPO SEPAR 2000 FILTER TYPE SEPAR 2000 FILTRI DI TIPO SEPAR 2000 CARTOUCHE DE RECHANGE

REF	MICROM	(l/h)	(mm)	(mm)	(mm)
RECGS00530	10	300	75	24	75
RECGS01030	30	600	88	55	88
RECGS01830	30	1080	136	55	138

RECMAR


RECGS00530


RECGS01030 RECGS01830

FILTROS AIRE AIR FILTER FILTRI ARIA FILTRE A AIR

REF	OEM	
REC21379288	21379288 21141341	D3



REF	OEM	
REC842280	842280	AQAD70C, D TMD70C, 100A, 120A, 120B TAMD60A, B, C TAMD70C, D, E TAMD120, 121, 122, 162 MD70C, 71, 74, 165



REF ORIGIN.	OEM	
RM3838952	3838952 3827167	TAMD74A-A, A-B, C-A, C-B, L-A, L-B, P-A, P-B, TAMD75P-A



RECMAR	KIT	OEM	Ø	
REC21646645	RM3582357	21646645 21782391 3582358	165 mm	31, 41 D3-110I-A D3-130I-A D3-160I-A TAMD42WJ-A


REC21646645


RM3582357

REF	OEM	Ø	
REC858488	858488	200 mm	MD31, 41 TAMD42B, WJ-A



REF	OEM	
REC3825038	3825038	TAMD63L-A, L-B, P-A



REF	OEM	
REC21196919	21196919 3885441	D12C-A MP, D-A MH, D-A MP, D-B MH, D-B MP, D-C MH, D-C MP, D-D MP, D-E MH, D-E MP, D-F MP, D-G MH, D-G MP, D-H MP D13B-A MP, B-B MP, B-C MP, B-D MP, B-E MH, B-G MP, B-H MP D16C-A MH, C-B MH, C-C MH, C-A MG



VOLVO

RECAMBIOS MARINOS

REF	OEM		REF	OEM
REC3580509	3580509	D2-50F, 60F D2-55A, B, C, D, E, F D2-75A, B, C, F MD2020B, C, D MD2020B (SN 5101311300+) MD2030B, C, D MD2040A, B, C, D	REC3580510	3580510





REF	OEM	
REC21702999	21702999 3818541 3583654	D-4, 6, 9, 11



REF	OEM	
REC21171277	21171277 3889484 3886591 3881586	D3-110, 130, 160, 190



REF	OEM	
REC876185	876185 463505 863344	MD30, 40 KAMD42A, B, PA KAD32P-A, 42A, 43P, 300 KAD44P, A, B, C TAMD61A, 62A, 71, 72

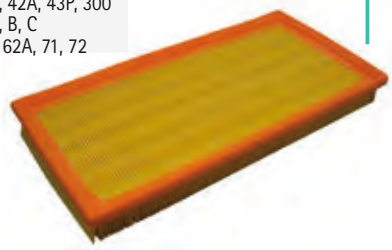

FILTRO DE ACEITE OIL FILTER FILTRO OLIO FILTRE A HUILE

RECMAR	ORIG.	OEM	
REC834337	RM834337	834337 22057107 897321	MD 1B, 2A, 2B, 3B, MD 5A, B, C MD 6A, 6B, 7A, 7B MD 11C, 11D, 17C, 17D 2001, 2002, 2003 Inversors HS1, IPS-A, B, C, D, E, F



RECMAR	ORIG.	OEM	
REC3827069	RM3827069	21549542 3827069 829161	MD21A (antiguo | Old | vecchio | ancien) MD21B AQD21B, 32 TAMD61, 63, 71, 72, 73, 74



RECMAR	ORIG.	OEM	
REC3581621	RM3581621	3581621 21549544 861474 861475	MD21B AQD21B



RECMAR	ORIG.	OEM	
REC3517857	RM3517857	3517857 1266286 418432 430143	MD21A, 22L-B, 30, 31 TMD22, 22B, 31, 36 TAMD22P-B AQD21A KAD32



RECMAR	ORIG.	OEM	
REC3840525	RM3840525	3840525 3589316	D1-30 D2-40, 50, 55, 60, 75 MD2030A, B, C, D MD2040A, B, C, D



RECMAR	ORIG.	OEM	
REC861473	RM861473	861473 3808605 861826	D1-13, 20 MD2010A, B, C, D MD2020A, B, C, D



RECMAR	OEM	
REC21913334	21913334 21687472	D8A1 D8A2



RECMAR	OEM	
REC3831236	3831236 20821230 21640514	D5 D7



RECMAR	ORIG.	OEM	
REC471034	RM471034	471034	MD40, 41 D70 TD30A KAD43P-A KAMD43P-A



RECMAR	ORIG.	OEM	
REC127695-35150	RM4785974	423135 4785974	KAD42A, 42B, 43, 44 KADM42A, 42B, 43, 44 TAMD60A, B, C TAMD70B, C, D, E TAMD120A, B MD70A, B, C TMD70A, AB, B, C AQD70B, C, D, BL, CL THAMD70B, C TMD100A, C TMD120A, B, C TMD121C



RECMAR	ORIG.	OEM	
REC21707134	RM466634	466634 21707134	TAMD61A, 100, 103A, 120B, 122, 122A TMD102, 120B, 121, 122, 122A, 162



RECMAR	ORIG.	OEM	
REC847741	RM847741	847741	MD61, 62, 63, 71, 72, 73, 74, 75, 102, 103, 122 D5, 7



RECMAR	ORIG.	OEM	
REC861476	RM861476	861476 859746	MD22A, L-A, TMD22



RECMAR	ORIG.	OEM	BY-PASS	
REC3827069	RM3827069	21549542 3827069 829161 829390	✓	61, 63, 71, 72, 73, 74, 75



RECMAR	ORIG.	OEM	BY-PASS	
REC3582732	RM3582732	3582732 22030848		D4, 6
REC21632901	RM21632901	21632901 22030852	✓	



RECMAR	ORIG.	OEM	BY-PASS	
REC478736	RM478736	21707133 478736	✓	D9, 11, 12, 13, 16, TMD102 TAMD103, 162, 165



RECMAR	ORIG.	OEM	BY-PASS	
REC21707132	RM477556	21707132 477556 471392	✓	D9, 11, 12, 13, 16 TAMD103, 162, 165, 193



REF	OEM	
REC30788490	30788490	D3-110I-D, I-E, I-F D3-140I-E, I-F, A-D, A-E, A-F D3-150I-D, I-E, I-F D3-170I-D, I-E, I-F, A-D, A-E, A-F D3-200I-D, I-E, I-F, A-D, A-E, A-F D3-220I-D, I-E, I-F, A-D, A-E, A-F

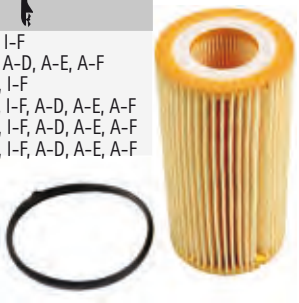

REF	OEM	
REC8692305	8692305	D3-110I-A, B, C D3-130IA, B, C, D3-160A-A, B, C, D3-160I-A, B, C, (2004 +) D3-130A-A, B, C D3-190A, B, C, D3-190IB, C, (2005 +)



new

REF	OEM	
RM23538670	23538670	DPI



FILTRO DE REFRIGENANTE — COOLANT FILTER — FILTRO RAFFREDDAMENTO — FILTRE REFRIGERANT

REF	OEM	
REC21192875	21192875 20532237 1665251	D9 D12 TAMD162, 163, 165



FILTRO DESVAPORIZADORES — AIR FILTER CARTER — FILTRO SFIATO BENZINA — FILTRE RENIFLARD

REF	OEM	
REC876069	876069 3830004 876070 849270	D12D, 30,31,40,41 KAD32P TAMD61A, 62A, 63, 70, 71A, 72A, 73, 74, 120, 122, 161, 162, 163,165



REF	OEM	
REC21368879	21368879	D3-110I-G, I-D, I-E, I-F D3-140A-D, A-E, A-F, A-G, I-G, I-E, I-F D3-150I-D, I-E, I-F, I-G D3-170A-D, A-E, A-F, A-G, I-D, I-E, I-F, I-G D3-200A-D, A-E, A-F, A-G, I-D, I-E, I-F, I-G D3-220A-D, A-E, A-F, A-G, I-D, I-E, I-F, I-G



new

RECMAR	OEM		ORIG.	OEM
REC3584144	3584144	D4 & D6	REC3584145	REC3584145	3584145





RACORS | RACORS | RACCORDI | RACCORDS

REF		
GS30430	8 mm	2
GS30431	10 mm	2

GOLDENSHIP



ORIENTABLES
GUIDEBLE
ORIENTABILE
ORIENTABLE

REF		
GS30432	8 mm	2
GS30433	10 mm	2

GOLDENSHIP



REF				
RAC1/2X16	1/2"	16 mm	500 900 1000	1
RAC1/2X18	1/2"	18 mm		1
RAC1/2X20	1/2"	20 mm		1
RAC3/8X10	3/8"	10 mm		1
RAC3/8X12	3/8"	12 mm		1
RAC3/8X14	3/8"	14 mm		1

RACOR



REF	NPT	NPT		
RAC1/2F-1/2M	7/8"	1/2"	900 1000	1
RAC3/8F-3/8M	3/4"	3/8"	500	1

RACOR



REF	NPT		
BRA125-3/16x1/4	1/4"	3/16"	1
BRA125-1/4x1/2	1/2"	1/4"	1
BRA125-5/16x3/8	3/8"	5/16"	1
BRA125-3/8x3/8	3/8"	3/8"	1
BRA125-3/8x1/2	1/2"	3/8"	1
BRA125-1/2x3/8	3/8"	1/2"	1
BRA125-1/2x1/2	1/2"	1/2"	1
BRA125-1/2x3/4	3/4"	1/2"	1
BRA125-5/8x3/8	3/8"	5/8"	1
BRA125-5/8x3/4	3/4"	5/8"	1
BRA125-3/4x3/4	3/4"	3/4"	1
BRA125-1x3/4	3/4"	1"	1
BRA125-1/4X3/8	1/4"	3/8"	1



new

REF		
REC500MACON	500	3/8" = 10 mm



REF			
GS31066	1/4" NPT	5/16" = 7.9 mm	2
GS31055	3/8" NPT	3/8" = 9.5 mm	2
GS31056	3/8" NPT	5/16" = 7.9 mm	2

GOLDENSHIP



MANGUERA CARBURANTE | FUEL HOSE | TUBO DI CARBURANTE | TUYAU DE CARBURANT

Tubo de goma para el transporte de carburante (diesel o gasolina). Construida en goma negra (NBR). Contenido aromático no superior al 60%. Resistente a la abrasión de los agentes marinos.

Long length rubber hose, suitable for loading diesel, bio-diesel and unloaded fuel for marine pleasure craft inboard engines up to 24 m.

Tubo in gomma per il passaggio di carburante (diesel o benzina). In gomma nera (NBR). Per motori entrobordo su imbarcazioni da diporto fino a 24m.

Tuyau en caoutchouc pour le passage du carburant (diesel ou essence). Caoutchouc noir (NBR). Pour moteurs in-bord sur bateaux de plaisance jusqu'à 24m.

CARBO/7840/A1

REF	Ø (mm)					Lloyd's Register
GS35049	6x16	14 bar	35 mm		40 m	
GS35050	8x17	14 bar	50 mm		40 m	
GS35051	10x19	14 bar	60 mm		40 m	
GS35052	12x22	10 bar	75 mm	-30°C ~ 100°C	30 bars 20 m	Rina CE 0474 Lloyd's Register 96/00/127
GS35053	16x26	10 bar	100 mm		40 m	
GS35054	19x30	10 bar	115 mm		20 m	
GS35055	25x37	10 bar	250 mm		x m	

SAE J 1527 - 2004
USCG A1 R1
ISO 7840 A-1 2004 CE

ht hoses technology



De goma para diesel y gasolina sin plomo. Ideal para fueraborda. Refuerzos texiles internos. Muy flexible. Contenido aromático 50%.

Rubber Hose suitable for loading mineral oils, diesel and unloaded fuel

In gomma per diesel e benzina senza piombo. Ideale per motori fuoribordo. Tessuto interno rinforzato. Molto flessibile.

En caoutchouc pour diesel et essence sans plomb. Idéal pour les moteurs hors-bord et IB. Tissu intérieur renforcé. Très flexible.

CARBUPOMP/10NL

REF	Ø (mm)				
GS35031	6x12	10 bar	50 mm	-25ºC ~80º C	50 m
GS35032	8x15	10 bar	65 mm		50 m



ISO R1307

Manguera para lineas de combustible. Con refuerzo termoplástico que le permite excelente flexibilidad y resistencia a los rayos UV. Color gris. Resistente al alcohol. Especialmente indicado para motores fueraborda.

Marine fuel hose for outboards. Fuel resistant thermo-plastic formulation with 2 spiral reinforcement provides excelent bendability and resistance to UV, aging and permeation by all marine fuels (gasoline/petrol and diesel) including alcohol blends.

Tubi per il condotto del carburante. Con rinforzo termoplastico che gli permette un'eccellente flessibilità e resistenza ai raggi UV. Resistente alle miscele di alcool. Indicato per motori fuoribordo.

Tuyau de carburant marin. La formulation thermoplastique avec 2 renforts en spirale offre une excellente flexibilité et résistance aux UV, au vieillissement et à la perméation de tous les carburants marins (essence et diesel), y compris les mélanges d'alcool.

REF	Ø		
TRI305-0566	8 mm 5/16"	15 m	1
TRI305-0386	10 mm 3/8"	15 m	1

SAEJ 1527

ISO-8469 B1

CE CERTIFIED



TRIDENT

ACCESORIOS PARA FILTROS / FILTER ACCESSORIES / ACCESSORI PER FILTRI / ACCESSORIES POUR FILTRES

LLAVES PARA FILTRO / FILTER KEY / CHIAVE DA FILTRO / CLÉ À FILTRE

REF
RACRK22628

RACOR



REF	
REC70720	65 - 110 mm

Recmar

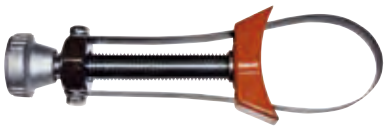

VÁLVULA DRENAJE AGUA DE FILTROS RACOR / DRAIN VALVE FOR RACOR FILTERS / VALVOLA DRENAGGIO ACQUA PER FILTRI RACOR / VANNE DE DRAINAGE D'EAU POUR FILTRE RACOR

REF
RACRK19492UL

RACOR



SENSOR DE AGUA PARA FILTROS DIESEL / WATER SENSOR FOR DIESEL FILTERS / SENSORE ACQUA PER FILTRI DIESEL / SONDE DE PRESENCE D'EAU POUR DIESEL

REF
RECRK21069

Recmar



DIESEL

RELOJ SENSOR DE AGUA / WATER ALARM / ALLARME SENSORE ACQUA / ALARME SENSOR D'EAU

REF
RACRK20726

RACOR



BOMBA DE COMBUSTIBLE | FUEL PUMP | POMPA COMBUSTIBILE | POMPE À CARBURANT

BOMBA DE COMBUSTIBLE MECÁNICA | FUEL PUMP MECHANICAL | POMPA COMBUSTIBILE MECCANICA | POMPE À ESSENCE MECANIQUE

GAS

REF	OEM	
REC855297	855297 841600	430A 431A AQ205A AQ175A



REF	OEM	
REC3854053	3854053	Ford 302, 351 5.0 & 5.8 FLP



REF	OEM		
REC8M0073435	3854858	GM 4 cyl (2.5 / 3.0L) MCM 3.7L 3.0L (SNL097000+)	REC35-8M0046752



REF	OEM	
REC3855276	981650 3855276	5.7 GLPMDA, GLIMDA, GLPNCS, GLPLKE, GLPLKR, GSPLKD, GSPLKE



REF	OEM	
REC826493	826493	500, 501, 570, 572 AQ200, 225, 255, 211, 231, 271, 311, 260, 290



REF	OEM	
REC841161	841161	AQ120B, AQ140A, BB140A (últimas versiones | early versions | ultime versione | dernières versions)) 230A, B AQ125B AQ131A, B, C, D AQ145A, B BB145A, 250A, B AQ151A, B, C, D AQ171A, C



BOMBA DE COMBUSTIBLE MECÁNICA — FUEL PUMP MECHANICAL

REF	OEM	
REC21134777	21134777 833323	MD1B, 2A, 2B, 3B, 5A, 5B, 5C, 6A, 6B, 7A, 7B, 11C, 11D, 17C, 17D 2001, 2002, 2003 (-2301)



REF	OEM	
REC859428	859428	2001, 2002, 2003 (2301+) AQD2B D2A MD1B MD2A, B MD3B MD5A, B, C MD6A, B MD7A, B MD11C, D MD17C, D



REF	OEM	
REC3582500	3582500 3582458 859844	MD22, A, L-A, P-B, L-B TMD22A, B, P-C TAMD22P-B



POMPA COMBUSTIBILE MECCANICA — POMPE À CARBURANT MECANIQUE

REF	OEM	
REC21132189	21132189 3584126	D1-13, B, F D1-20, B, F D1-30, B, F D2-40, B, F D2-50F D2-55, B, C, D, E, F D2-60F D2-75, B, C



REF	OEM	
REC3582310	3582310 860320 1542170	30, 31, 40, 41, 42, KAD32D, T KAMD44P-A, KAD44P-A, KAMD300A



REF	OEM	
REC3580100	3580100	2010, 2020, 2030, 2040, A, B, C, D D2-55A, B, C, D, E, F



VOLVO

RECAMBIOS MARINOS

BOMBA DE COMBUSTIBLE ALTA PRESIÓN | HIGH PRESSURE FUEL PUMP | POMPA COMBUSTIBILE ALTA PRESSIONE | POMPE À ESSENCE HAUTE PRESSION

REF	OEM		PARA BOMBA FOR PUMP PER POMPA POUR POMPE
RM3588865	3588865	GXI, GI (modernos | Moderns | Moderno | Modernes) 4.3, 5.0, 5.7, 8.1 4.3GIPEFS 5.0GIPEFS 5.7GSIPEFS 7.4GIPEFS, GSIPEFS 8.2GSIPEFS	RM21608511



REF	PARA BOMBA FOR PUMP PER POMPA POUR POMPE
REC8865	RM21608511



Kit bomba con tóricas y conector.
Pump kit with o-ring and connetor.
Kit pompa con anelli e connettore.
Kit pompe avec toriques et raccord.

REF	OEM	
REC3817328	3817328	8.1GI, GXI (modernos | Moderns | Moderno | Modernes) 8.1 IPS 3.0 GXIC-J, CXI-J



REF	OEM	
REC3857650	3857650	4.3, 5.0, 5.7 7.4 GI (bracket:) 5.0, 5.8 FI, FS (Ford) 120 PSI (Ford sobre enfriador | on cooler | dispositivo di raffreddamento | avec refrodissement)



KITS BOMBA DE ALTA PRESIÓN | HIGH PRESSURE FUEL PUMP, KIT | KIT POMPA COMBUSTIBILE ALTA PRESSIONE | KIT POMPE À CARBURANT HAUTE PRESSION



REF	OEM		
REC21608512	22608512 23386773 23794966 21545139 21397772 3594785	8.1 (Con regulador de combustible With fuel regulator Con regolatore combustibile Avec regulateur de carburant)	REC3847644

REF	OEM		
RM21608511	21608511 21545138 3594444 3860210 3861355	GXI, GI Moderno 4.3, 5.0, 5.7, 8.1 4.3GIPEFS 5.0GIPEFS 5.7GSIPEFS 7.4GIPEFS, GSIPEFS 8.2GSIPEFS	REC3847644



BOMBA DE COMBUSTIBLE BAJA PRESIÓN | LOW PRESSURE FUEL PUMP | POMPA COMBUSTIBILE BASSA PRESSIONE | POMPE À ESSENCE BASSE PRESSION

REF	OEM		
REC3858261	3858261 3857986 3850809	5.0, 5.8 (Ford) (bracket:)	8 PSI 25 gpm



REF	PARA BOMBA FOR PUMP PER POMPA POUR POMPE
REC8845	RM21608511



REF	OEM		
REC3858714	3858714	4.3, 5.0, 5.7, 7.4 GI, GL (bracket:) GM (Big bloce | Big block | Blocco grande | Big bloc)	8 PSI 45 gpm



KITS BOMBA DE ALTA PRESIÓN | HIGH PRESSURE FUEL PUMP, KIT | KIT POMPA COMBUSTIBILE ALTA PRESSIONE | KIT POMPE À CARBURANT HAUTE PRESSION

REF		
CARP74021	12 Volt.	4-6PSI /20-30 GPH

Poseen todas las medidas de seguridad exigidas.
Puede usarse para trasvase de gasoil.
Listed by Marine Division UL. Used for diesel fuel transfer
Conforme con tutte le misure di sicurezza necessarie.
Si può utilizzare per travasi di gasolio.
Ils disposent de toutes les mesures de sécurité requises.
Peut être utilisé pour le transfert de carburant diesel.



REF
RECEFP-KT



JUNTA BOMBA DE COMBUSTIBLE | FUEL PUMP GASKET | GUARNIZIONE POMPA COMBUSTIBILE | JOINT DE POMPE À CARBURANT

REF	OEM		
REC3501530	3501530	BB 230/250 251/140/145 AQ120/125/131/140/145/151/171	GAS
		D31, D41, D30, D40, D42 D300, D43, D44 D13	DIESEL



new

INYECTORES | INJEKTOR | INIETTORE | INJECTEURS

INYECTORES Y KITS | INJEKTORS & KITS | INIETTORE E KIT | INJECTEURS ET KITS

GAS

REF	OEM	
REC885176	3858969	4.3, 5.0, 5.7 GI, GXI



REF	OEM	
REC3855182	3855182	5.7GLPMDA, GIPMDA, GIPMDACE, GLIMDA, GIIMDA, GIPHUS, GLPNCS, GIPNCACE, GIPNCSCE, GIPNCMCE, GIPNCBCE, GIINCCCE, GIINCSCE, GLPLKA, GLPLKD, GLPLKE, GLPLKR, GSPLKE, GSPLKE, GLIPLKDCE, GIPLKDCE, GIPLKECE, GSICPLKD, GSIPLK 4.3GLPHUB, GSPHUB, GSPHUS, GIPHUSCE, GLPNCA, GLPNCB, GLPNCS, GSJNCC, GSJNCS, GSPNCA, GSPNCB, GSPNCM, GSPNCS, GIPNCACE, GIPNCBCE, GLPLKD, GLPLKE, GSPLKD, GSPLKE, GIPLKDCE, GIPLKECE, GSJLKD, GLPBYC, GSPBYC, GIPBYCCE, GSJBYA, GIJBYA (1994-07)



REF	OEM	
REC3858941	3858941	4.3GXI-A, GLPWTC, GLPWTR, GSPWTC, GSPWTR, GIPWTC, GIPWTR, GIJWTR, GSJWTR, GLPEFS, GIPEFS TBI



REF	
REC853998A1	GM V6 & V8



INYECTOR | INJEKTOR | INIETTORE | INJECTEUR DIESEL

DIESEL

REF	OEM	
REC859494	859494	AD31B, D, XD D31L-A AD41B, D D41B TAMD31B, D, L-A, M-A, P-A, S-A TAMD41B, D, H-A, H-B, L-A, M-A, P-A TMD31B, D, L-A TMD41B AD41L-A, P-A (Indicar nº producto | Indicate product number | Indicare il numero del prodotto | Indiquez le numéro du produit)



REF	OEM	
REC861725	861725	KAD44P-A, P-B, P-C KAMD44P-A, P, P-C



REF	OEM	
REC3581696	3581696	KAD32P



REF	OEM	
REC861103	861103	AD31P-A AD41D D41D, L-A KAD42A, B, P-A KAD43P-A KAMD42A, B, P-A KAMD43P-A TAMD31P-A TAMD41D, H-A, H-B, L-A, M-A, P-A TAMD42B, WJ-A TMD41D, L-A AD41L-A, P-A (Indicar nº producto | Indicate product number | Indicare il numero del prodotto | Indiquez le numéro du produit)



REF	OEM	
REC3583073	3583073	KAD300A, KAMD300-A



KIT CAMISA DE INYECTOR — INJEKTOR SLEEVE KIT — KIT CAMICIA INIETTORE — KIT FOURREAU D'INJECTEUR

REF	OEM	
REC3581536	3581536	AD31L-A, P-A AD41L-A, P-A D41L-A KAD32P-A KAD43P-A KAMD43P-A TAMD31L-A, M-A, P-A, S-A TAMD41H-A, H-B, P-A, L-A, M-A TAMD42WJ-A TMD31L-A TMD41L-A



REF	OEM	
REC889970	889970	D4-180I-B, I-C, I-D, I-F D4-210A-A, I-A, I-B D4-225A-B, I-B, A-C, A-D, I, A-F, I-F D4-260A-F, D-F, I-F D4-300A-F, D-F, I-F D6-280A-A, A-B, A-C, A-D, A-E, I-A, I-B, I-C, I-D, I-E D6-310I-A, A D6-300A-F, D-F, I-F, A-F D6-330A-F, D-F, I-F D6-370A-F, D-F, I-F D6-400A-F D6-435D-F



REF	OEM	
REC861688	861688	KAD44P-A, P-B, P-C KAMD44P-A, P-C KAD300-A KAMD300-A

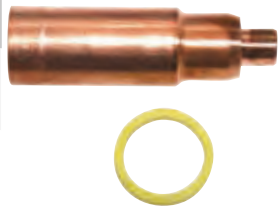

REF	OEM	
REC861255	861255	AD31A, B, D, L-A, XD AD41A, B, D, L-A, P-A AQAD31A AQAD41A D41A, B, D, L-A KAD42A, B, P-A KAD43P-A KAMD42A, B, P-A KAMD43P-A MD31A TAMD31A, 31B, D, L-A, M-A TAMD41A, B, D, H-A, H-B, L-A, M-A, P-A TAMD42B, WJ-A TAMDS31B TD31ACE, TMD31A, B, D, L-A TMD41A, B, D, L-A



new

REF	OEM	
REC85104134	85104134 85124676 3183241 85115324	D12



new

REF	OEM	
REC21351717	21351717 21274700 85113732 85116162	D11, D13, D16, D4, D6, D9



RETENES Y KITS — SEALS & KITS — PARAOLI E KIT — JOINTS ET KITS

REF	
REC1302	AQAD41A AQD41A MD41B, L-A KAD42A KAD43P KAMD42A KAMD43P-A TAMD41A, B, P-A, L-A, M-A, H-A TMD41A, B, L-A



ARANDELA AL — WHASER AL — RONDELLA AL — RONDELLE AL

new

REF	OEM		
REC957170	957170	2001, 2002, 2003 AQD70, MD70 MD11 MD17 MD5, 6, 7	Ø 9.3 x 6.85 x 1.0 mm
REC957181	957181 18840 1218022		18.2 x 21.9 x 1.5 mm
REC957171	957171		8.3 x 11.3 x 1 mm
REC957184	957184 6613687		25.9 x 21.2 x 1.5 mm
REC1542158	1542158	D30A D40A, B	


REC957170


REC957181


REC957171


REC957184


REC1542158

ARANDELA CU — WHASER CU — RONDELLA CU — RONDELLE CUIVRE

new

REF	OEM			
REC1542159	1542159 18671	D30A D40A, B	14.3 x 20.8 x 1.5 mm	
REC947620	947620 946729 6601761 20459900		8.3 x 11.3 x 1.0 mm	
REC969011	969011 13969011 20459972 21108673		14.3 X 19.2 X1.5 mm	
REC981183	981183		6.2 x 11 x 1 mm	
REC18818	18818		19.4 x 25.8 x 2mm	
REC947627	947627 13947627			GASOLINA Y AGUA FUEL & WATER COMBUSTIBILE E ACQUA GASOLINE ET EAU
REC11994	11994		12.2 x 17.9 x 1.5 mm	
REC1542157	1542157	D30A D40A, B, C		
REC947622	947622 13947622 20450903 993436 20549894		16.2 x 19.7 x 1.5 mm	


REC1542159


REC947620


REC969011


REC981183


REC18818


REC947627


REC11994


REC1542157


REC947622

TÓRICA — O-RING — O-RING — JOINT TORIQUE

new

REF	OEM						
REC976018	976018 955988 13955988	D43, 44 D4300		INFERIOR INYECTOR	INJECKTOR DOWN O-RING	INFERIORE INIETTORE	INFÉRIEUR D'INJECTEUR
		D70		VÁLVULA REFLUJO COMBUSTIBLE	FUEL VALVE	VALVOLA COMBUSTIBILE	SOUPAPE ESSENCE
REC944988	944988	D42, 43, 44 D300	17 x 4.5 mm	TUERCA INYECTOR	NUT INJEKTOR	DADO INIETTORE	ÉCROU INJECTEUR
REC3583078	3583078 3887602	D4 / D6		INYECTOR	INJEKTOR	INIETTORE	INJECTEUR


REC976018


REC944988


REC3583078

JUNTA TAPÓN LLENADO ACEITE DE MOTOR — ENGINE OIL FILLER CAP GASKET — GUARNIZIONE DEL TAPPO DI RIEMPIMENTO DELL'OLIO MOTORE — JOINT DU BOUCHON DE REMPLISSAGE D'HUILE MOTEUR

new

REF	OEM	
REC1275379	1275379 940096	D43 D44 D4300



CARBURADORES CARBURATORS CARBURATORI CARBURATEUR

REF	OEM	KIT		
RM21610333	21610333 21132437 3857982 3854086	REC21533394	2	3.0L, GSP, GSM, GLM, GLP





REF	OEM		
MP426574	3855279	4	5.7 GSP 600 CFM



REF	OEM	KIT		
MP426422	3858331 3859066 3854346 21610334 2850245	REC3854020	2	500 CFM 5.7, GLP, GLI







REF	OEM	KIT		
MP426766	3855957	REC3854105	4	7.4L & 8.2L 750 CFM



KITS ADAPTADORES CARBURADORES | CARBURETORS ADAPTER KITS | KIT ADATTATORE CARBURATORI | KITS ADAPTATEURS DE CARBURATEURS

HOLLEY

REF
RECHOL17-6



REF	OEM	
REC27-65577	27-65577	4
REC27-41609	27-41609	4

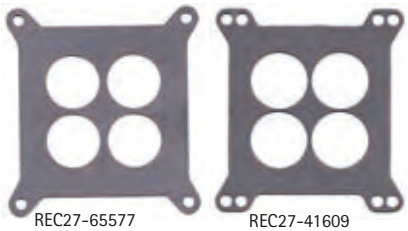

REC27-65577 REC27-41609

REF
REC2696



REF	OEM	
REC27-70142	27-70142	2
REC27-60715	27-60715	2



REC27-70142 REC27-60715

JUNTAS | GASKET | GUARNIZIONE | JOINTS

REF	OEM
REC27-8079821	841031

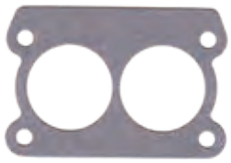

REF	OEM	
REC3853283	3853283	3.0 GS, GL 4.3 GL-P, J, JF



REF	OEM	
REC824677	824677	SOLEX Carburetor



JUNTAS BASE | GASKET CARBURETOR BASE | GUARNIZIONE BASE CARBURATORE | JOINT BASE DE CARBURATEUR

new

REF	OEM	
REC908765	856033 826479	V6 & V8, 4BBL

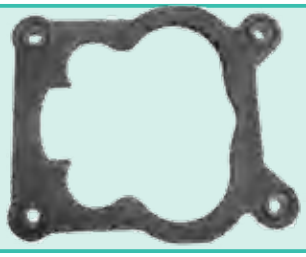

TUBO COMBUSTIBILE BOMBA A CARBURADOR | FUEL TUBE FROM PUMP TO CARBURETOR | TUBO DA COMBUSTIBILE A POMPA CARBURATORI | TUYAU CARBURANT, POMPE À CARBURATEUR

REF	
REC18-8115	3/8" x 25 - 5/8"
REC18-8114	3/8" x 31" - 5/8"



BOYAS — FLOATS — GALLEGGIANTI — FLOTEURS

ROCHESTER

REF	
REC1397-3327	305" (5.0L) 307" (5.0L) 350" (5.7L) 454" (7.4L) AQ225B, C, D, E, F AQ255A, B AQ260A, B 290A 501A 501A/MS4A 570/S4A



ROCHESTER & MERCAB

REF	
REC3302-9031	AQ175A AQ200D, F AQ500A



REF	OEM
REC3854018	3854018



KIT JUNTAS DE CARBURADOR — CARBURETOR GASKETS KIT — KIT GUARNIZIONE CARBURATORI — KIT JOINTS CARBURATEURS

REF	OEM	
REC875407	875407	AQ100, 105A, 110, 115, 120 AQ130A, B AQ165A



REF	OEM	
REC823426A1	855889	AQ225B, C, D, E, F AQ255A, B AQ260A, B, AV, C AQ290A 1A501A MS4A, 570 MS4A 305"(5.0L) 307"(5.0L) 350"(5.7L) 454"(7.4L)



REF	OEM	
REC841994	841994	AQ175A, 200, 225, 260, 290

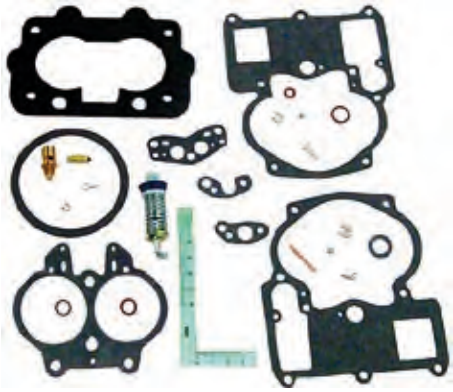

REF	OEM	
REC841294	841293	AQ120B, 140A



REF	OEM	
REC856472	856472	AQ115A, B AQ125A, B AQ130C, D AQ131A, B, C, D AQ145A, B AQ151A, B, C AQ170A, B, C AQ171A, C

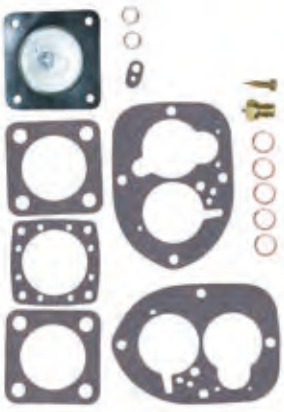

REF	OEM	
REC3855017	3855017	8.2L GL HU, MD



REF	OEM	
REC21533394	854256 21533394	3.0 GL, GS



REF	OEM	
REC3854020	3854020	4.3GL WT, GS WT, GI 5.0L, GL 5.7GL



REF	OEM	
REC1396-4656	3854106	HOLLEY (2 bbl) 5.0L, 5.8L FORD FI, FL, SX FORD HO,MD, NC

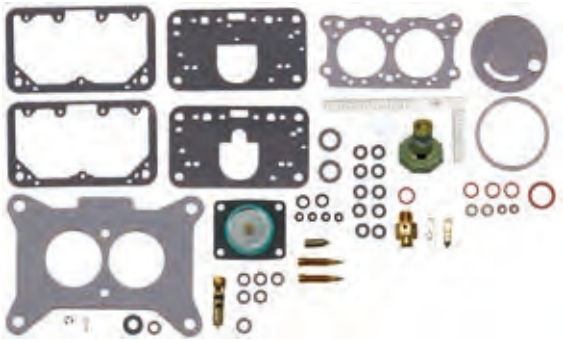

REF	OEM	
REC1396-5238	3854107	HOLLEY (4 bbl) 4.3L, GL,GS 5.0L, 5.8L FORD HU, MD, NC



REF	OEM	
REC3854105	3854105	7.4L Gi, GL, GSi 8.2L GSi HU, NC, LK, MD

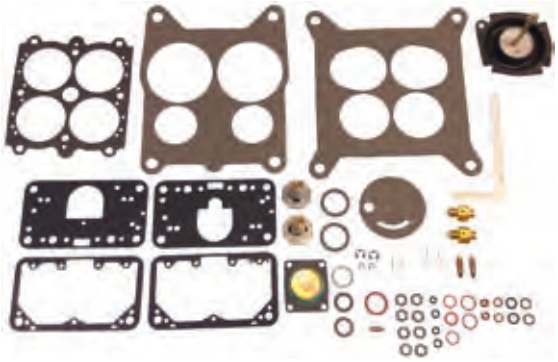

REF	OEM	
REC985052		7.5 FORD HOLLEY (4 bbl)



REF	OEM	
REC76104		740A MS5A

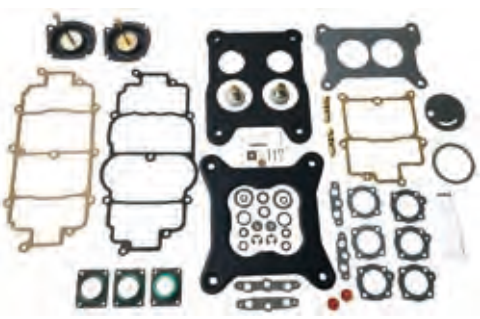

GUÍA CARBURADORES — GUIDE CARBURETORS — GUIDA CARBURATORI — GUIDE DES CARBURATEURS

	CYL	COD.	CARB.	KIT.	
AQ115A, B AQ125A, B AQ130C, D	4		SOLEX44 PA-1	REC856472	
AQ131A, B, C, D AQ145A, B			SOLEX44 PA-1	REC856472	
AQ120B AQ140A	4		SOLEX44 PHN-3	REC841294	REC3854018
AQ120A AQ130B	4			REC875407	
3.0L GL, GS, GLP	4	H-2	R-80316A, 1A	REC21533394	
AQ170A, B, C	6		SOLEX44 PA-1	REC856472	
AQ175A	6	R-2	17059059	REC841994	REC3302-9031
4.3L GI, GL, GS	6	H-2	R-80312A -A1	REC3854020	
4.3L GI ,GL, GS	6	H-4	R-80403A -A1	REC1396-5238	
AQ200D, F AQ500A	8	R-2	17057133	REC841994	
501A, 501A/MS4A, 570/MS4A	8	R-4	17059283,296,298	REC823426A1	REC1397-3327
5.0L, 5.7L GM	8	R-4		REC823426A1	REC1397-3327
5.0L, 5.8L, FORD	8	H-2	R-80382A-1A	REC1396-4656	
5.0L, 5.8L FORD	8	H-4	R-80383A-1A	REC1396-5238	
740 A/MS5A	8	H-4	R-84026AA	REC76104	
7.4 GM ROCHESTER	8	R-4		REC841994	REC1397-3327
7.4L GL	8	H-4	R-80378A-1A	REC3854105	
8.2L GI	8	H-4	R-80378A-1A	REC3855017	
7.5L FORD	8	H-4		REC985052	

JUNTAS BASE APAGALLAMAS — GASKET ARRESTORS — GUARNIZIONE PARAFIAMMA — JOINT DE PARE FLAMES

REF	OEM	
REC831239	831239	250/251 AQ & BB 125, 131, 145, 151, 165, 170, 171



TURBO — TURBO — TURBINE — TURBO

TUBO — TURBO — TURBINE — TURBO

RECmar®

	REF	OEM	
TAMD41A, B, D, L-A, H-A, H-B, P-A, M-A TAMD42WJ-A TMD41A, B, D D41A, B, D AQAD41A AD41A, D, B, L-A,P-A KAD42A, B, P-A KAD43P-A KAMD42B, P-A KAMD43P-A	REC861260	861260	REC3582563
MD40A TMD40A, B, C TAMD40A, B AD40B AQD40A AQAD40A, B	REC845294	845294	REC3582595





	REF	OEM		
AD30A AQAD30A MD30, A TAMD30, A TMD30, A	**REC846037**	846037	**REC3582595**	
AQAD31A AD31A, B, L-A, P-A AD41D D41D TMD31A, B TAMD31A, B, L-A, M-A TAMD41B, D KAD32P-A	**REC3581528**	3581528	**REC3582563**	
KAD300-A KAMD300-A	**REC3802125**	3583006	**REC3582563**	
KAMD44P-A, P-C KAD44P, P-B, P-C	**REC3802105**	3581755	**REC3582563**	
TAMD22P-B TMD22A, B, P-C	**REC3802092**	3581150	**RM859834**	
TAMD71A, B TAMD61A	**REC865428**	865428		

	REF	OEM		
TMD22A TMD22-B TMD22P-C	**REC861407**	861407	**RM859834** **REC861414**	
D3-110I-D, I-E, I-F, I-G, I-H D3-140, 150, 170, 200, 220	**REC3801387**	21163289 21354008	**RM3883844**	
D3-110I-A, I-B, I-C D3-130, 160	**REC3801270**	3847392	**RM3883844**	
D3-190	**REC3801271**	3847393	**RM3883844**	
D4-180, 210, 225	**REC3802150**	3582769	**RM3588435**	
D4-260	**REC3802149**	3582768	**RM3588435**	
D4-300	**REC3801173**	38879363	**RM3588435**	

	REF	OEM	
D6-280, 300, 310	REC3802152	3584138	RM3588435
D6-330, 350, 370	REC3802151	3584053	RM3588435
D6-400, 435	REC3801138	3809911	RM3588435

RECMAR







REF	OEM	
REC840962	840962	2003T, TB 2003TB SOLAS



new

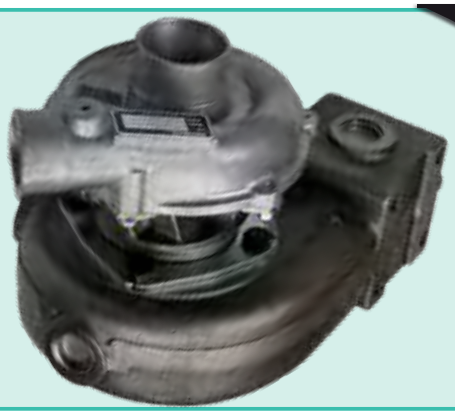

RECMAR

MANGUERA TUBE TUBO DURITE

REF	OEM	
REC3843854	3843854	D6-400, D6-435



new

SISTEMA ELÉCTRICO
ELECTRIC SYSTEM

SISTEMA ELETTRICCO
SYSTÈME ÉLECTRIQUE

SENSORES — SENSORS — SENSORE — CAPTEURS

SENSOR TPS — TPS SENDER — SENSORE TPS — CAPTEUR TPS

REF	OEM	
REC803148	3855296	7.4 GSI 8.2 GSI DPX 385, 415 BY/EF WT/HU LK/NC



REF	OEM	
REC8M0125617	3855184	V6, 305, 350, 454, 502, EFC



REF	OEM	
REC853678T	3857487	4.3, 5.0, 5.7, 8.1, 8.2L



SENSOR MAP — MAP SENSOR — SENSORE MAP — CAPTEUR MAP

REF	OEM	
REC3850396	3850396	4.3, 5.0, 5.7, 7.4L (1994-07) GI, GXI



SENSOR MAT/MAP — MAT/MAP SENSOR — SENSORE MAT/MAP — CAPTEUR MAT/MAP

REF	OEM	
REC8M0087834	3859020 3858987	V6 GI, GXI V8 GI, GXI



REF	OEM	
REC31216308	31216308	D3-110, 220



SENSOR IAC — IAC SENDER — SENSORE IAC — SONDE IAC

REF	OEM	
REC3855194	3855194 3855185	4.3, 5.0, 5.7, 7.4 GIIHUBCE, GIINCCCE, GIINCSCE, GIPHUSCE, GIPLKDCE, GIPLKECE, GIPNCACE, GIPNCBCE, GIPNCMCE, GIPNCSCE, GSIINCC, GSIXHUS, GSIXNCB 8.2 GSIXNCB DPX385XLKE, 415XLKE



REF	OEM	
REC3843751	3843751 3857696	4.3GXIE-M, P, Q, 225-R 7.4 GI 8.1 GI, GXI V6-225-E-A Se instala en el cuerpo de mariposa Installs on the butterfly body Si nstalla sul corpo farfalla A installer sur le corps de papillon



SENSOR PICADO — KNOCK SENDER

REF	OEM	
REC8M0077616	3854512	7.4 GL, GI, GS 8.2 (1989-01) GS, GS



REF	OEM	
REC806612T	3850357 22024631	4.3, 5.0, 5,7L GI / GXI (Modelos modernos | new models | modelli nuovi | Nouveaux modèles)

GAS



SENSORE DI CADUTA — CAPTEUR DE CLIQUETIS

REF	OEM	
REC3854905	3854905	4.3L (1994-02), 5.0L Gxi-A (2001-02), 5.7L GiL-A (2001), Gi-A, GXI-A, GXI-B, GiI-A, GSiI-A, GXiI-A, GXiI-B (2000-03), 5.7GLPNCS, GIPNCACE, GIPNCSCE, GIPNCMCE, GIPNCBCE, GIINCCCE, GIINCSCE (1995-96)



SENSOR POSICIÓN ÁRBOL DE LEVAS — CAMSHAFT SENSOR

REF	OEM	
REC3863130	3863130	3.0, 4.3, 5.0, 5.7L GI, GXI V6 & V8 Para distribuidor de tapa plana For flat cap distributor Per distributore a coperchio piatto Pour distributeurs avec le couvercle plane

GAS



REF	OEM	
REC8631533	8631533	D3-110 --> D3-190 (I-A, A-A)

D DIESEL



SENSORE POSIZIONE ASSE A CAMME — SONDE POSITION D'ARBRE À CAMMES

REF	OEM	
REC3859082	3859082 3861323	8.1Gi-A, B, BF, C, CF, D, DF, 8.1LGSi-A, 8.1GXi-A, AF, B, BF, C, 8.1Gi-E, EF, 8.1GXi-D, DF, 8.1OSi-A, AF, 8.1GiI-E, 8.1GXiI-D (2001-07)

GAS



REF	OEM	
REC8658726	8658726	D3-110 --> D3-220

D DIESEL



SENSOR POSICIÓN CIGÜEÑAL — CRANKSHAFT SENSOR

REF	OEM	
REC892617	3808516	8.1L

GAS



REF	OEM	
REC21124849	21124849	V6 (modernos | new | nuovi | nouveau) Para tapas de distribución metálicas For metallic distribution caps Per tappi di distribuzione in metallo Pour carter de distribution en metal

GAS



SENSORE POSIZIONE ALBERO MOTORE — SONDE POSITION DE VILEBREQUIN

REF	OEM	
REC864297T01	3858979	4.3, 5.0, 5.7L Para tapas de distribución de plástico For plastic distribution caps Per tappi di distribuzione in plastica Pour carter de distribution en plastique

GAS



KIT TEMPERATURA Y PRESIÓN DE ACEITE CON ALARMA

COMPLETE TEMPERATURE & OIL PRESSURE WARNING KIT

KIT TEMPERATURA PRESSIONE DELL'OLIO CON ALLARME

KIT SONDE TEMPERATURE ET PRESSION D'HUILE AVEC ALARME

REF	OEM
REC41400	





SENSOR PRESIÓN DE ACEITE

OIL PRESSURE SENDER

SENSORE PRESIONE OLIO

SONDE DE PRESSION D'HUILE

REF	OEM		
REC8M0068784	3857532	80 PSI	3.0, 4.3, 5.0, 5.7, 7.4, 8.1, 230A, B 250A, B



REF	OEM	
REC3852215	3852215	4 cyl V6, V8 3.0, 4.3, 5.0, 5.7, 7.4, 8.2



REF	OEM	
REC3887328	3887328 3842442	V6 GI, GXI V8 GI, GXI



REF	OEM	
REC1324750	1324750	MB10, B 18, 20, 30 AQ120B, 125A, 140A, 145A, 200B, 210A, 225A, 225B MD21A, 21B, 29, 32 2001, 2002, 2003



REF	OEM	
REC3545696	3545696	D3-110 --> D3-190



REF	OEM	
REC3808797	3808797	D1-13, 20, 30 D2-40, 55C, 60F, 75



REF	OEM	
REC21250645	21250645 3808796	D1-13, B, F D1-30, B, F D1-20, B, F D2-40, B, F D2-55D, E, F D2-60F D2-75, B, C, F



REF	OEM	
REC807078	807078	MD1A, 1B, 2A, 2B, 3B, 5A, 5B, 6A, 6B



REF	OEM	ESTACIONES STATIONS STAZIONI STATIONS	
REC866835	866835	1	D31, 32, 41, 42, 43, 44, 63, 72, 74, 75, 103, 122, 162, 165
REC866836	866836	2	D12D MD2010A, 2020A, 2030A, 2040A



REF	OEM	
REC829587	829587	MD5C, 7A, 7B, 11C, 11D, 17C, 17D

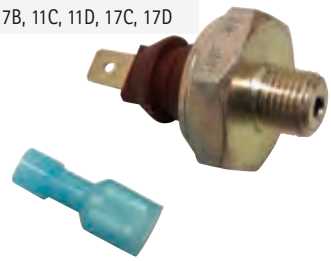

SENSOR RAIL DE PRESIÓN | OIL PRESSURE SENDER | SENSORE PRESIONE OLIO | SONDE DE PRESSION D'HUILE

REF	OEM	
REC3843100	3843100 3884352 3587927	D3, D4, D6



POTENCIÓMETRO MANDO | CONTROL POTENTIOMETER | POTENZIOMETRO DI CONTROLLO | POTENTIOMÈTRE

REF	OEM	
REC1336385	1336385	EDC / EVC



SENSOR DE TEMPERATURA AIRE | AIR TEMPERATURE SENSOR | SENSORE TEMPERATURA ARIA | SONDE DE TEMPERATURE D'AIR

REF	OEM	
REC805223T	3854527	4.3L EFI 5.0L Gxi-A (2001-02) 5.7L GiL-A (2001) 5.7L Gi-A (2000-01) 5.7L GSiL-A (2000-01) 5.7L Gxi-A (2000-01) 5.7L XiL-A (2000-01) 5.7L Gxi-B (2001-02 7.4L (1994-00) (Varios | Many | Varie | divers) 8.1L (2005+) (Varios | Many | Varie | divers)



SENSOR TEMPERATURA AGUA | WATER TEMPERATURE SENDER | SENSORE TEMPERATURA ACQUA | SONDE DE TEMPERATURE D'EAU

REF	OEM	
REC3862500	3862500	3.0, 4.3, 5.0, 5.7, 8.1 En codo de escape For exhaust elbow Per il gomito di scarico Pour coude d'échappement



REF	OEM	
REC872066	872066	3.0, 4.3, 5.0, 5.7L (1998-07)



REF	OEM	
REC3854159	3854159	5.0FI, FSi, FLi 5.8FI, FSi, FLi

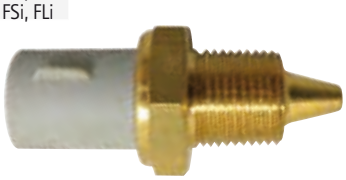

REF	OEM	
REC806490T	3853787	5.0L FL, FI, 5.8 FL, FI, FSI



REF	OEM	
REC3850397	3850397	D3 4.3 5.0 5.7 7.4 8.1



REF	OEM	ESTACIONES STATIONS STAZIONI STATIONS			
REC827151	827151	1	40-120ºC	KAMD42P-A, 43P-A, KAD32P, 42P-A, 43P-A MD2010C, D MD2020C, D MD2030C, D MD2040C, D MD21, 11, 17, 31, 41 30, 40, D2 AQD21	REC957181
REC840074	840074	2		D31, 32, 41, 42, 43 MD1, 2, 3, 7, 11, 17 AQD2B	

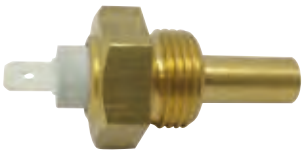

DIESEL

REF	OEM		
REC8653103	8653103	D3-110 --> D3-190	REC957181



DIESEL

SENSOR AVISADOR DE TEMPERATURA DEL AGUA — WATER TEMPERATURE WARNING SENSOR — SENSOR ALARMA TEMPERATURA — SONDE D'ALARME DE TEMPERATURE

REF	OEM			
REC873066	873066	97º	D31, 32, 41, 42, 43	REC957181



DIESEL

SENSOR DE AGUA EN COMBUSTIBLE — WATER IN FUEL SENSOR — SENSORE AQUA NEL COMBUSTIBILE — SONDE DE PRESENCE D'EAU

REF	OEM	
REC3808616	3808616	D3, 4, 6



DIESEL

REF	OEM	
REC3588916	3588916 874109	D1, 2, 3, 4, 6, 9, 12 31, 30, 41, 42, 43, 44, 300 MD2010, 2020, 2030, 2040 MD22



DIESEL

SENSOR AVISADOR DE PRESIÓN DE ACEITE — OIL PRESSURE WARNING SENSOR — SENSORE DI AVVERTIMENTO DELLA PRESIONE DELL'OLIO — SONDE ALARME DE PRESSION D'HUILE

REF	OEM		
REC863169	863169	2001, 2002, 2003 D12D, 31, 32, 40, 41, 42, 43, 44, 60, 61, 71, 72, 73, 74, 75, 100, 102, 103, 120, 121, 122, 162, 300	0.7 bar



DIESEL

REGULADOR VOLTAJE — VOLTAGE REGULATOR — REGOLATORI DI VOLTAGGIO — REGULATEUR

REF	OEM	
REC847605	847605	AQ170C MD11A, B, 2B, 3B, 6A, 60, 70, 100, 120 MB10A



SENSOR DE CIGÜEÑAL Y R.P.M. | CRANKSHAFT SENSOR & R.P.M. | SENSORE ALBERO MOTORE E R.P.M. | SONDE DE POSITION DE VILEBREQUIN

REF	OEM	
REC21426987	21426987 20513343	D1-13B, 20B, 30B, D2-40F, 55B, 55C, 55D, 55E, 55F, 75B, 75C, 75F D4-180I-B, I-C, I-D, I-E, I-F, D4-210A-A, I-A, I-B D4-225A-B, I-B, A-C, A-D, I-C, I-D, A-E, I-E, A-F, I-F D4-260A-A, A-B, A-C, A-D, D-B, D-C, D-D, I-A, I-B, I-C, I-D, A-E, D-E, I-E, A-F, D-F, DI-F D6-280A-A, A-B, A-C, A-D, A-E, I-A, I-B, I-C, I-D, I-E D4-300A-A, A-C, A-D, D-A, D-C, I-A, I-C, I-D, A-E, D-E, D-D, I-E, A-F, D-F, I-F D6-300A-F, D-F (MC), I-F D6-310I-A, A-A, A-B, A-C, A-D, D-B, D-C, D-D, I-B, I-C, I-D, A-E, D-E, I-E D6-330A-B, A-C, A-D, D-B, D-C, D-D, I-B, I-C, I-D, A-E, D-E, I-E, A-F, D-F, I-F D6-350A-A, A-B D6-370A-B, A-C, A-D, D-B, D-C, D-D, I-A, I-B, I-C, I-D, A-E, D-E, I-E, A-F, D-F, I-F D6-400A-E, A-F D6-435D-A, D-D, D-C, D-E, I-A, I-C, I-D, I-E, D-F, I-SC-F, I-TC-F, I-WJ-F D9A2A D9-425, D9-500, D9-500 (R4), D9-500 (R5), D9-575 D9A2B D9-425, D9-500 (R5), D9-575 D9A2C D9-425 D9A2E D9-425 D9A2F D9-575 D9A2K D9-575 D11A-A, A-B, A-C, A-D, A-C (IPS), A-D (IPS), A-E, A-E (IPS) D12D-A, D-B, D-C, D-E, D-G MH D12C-A, D-A, D-B, D-C, D-D, D-E, D-FP, D-G, D-H MP D13B-A, B-B, B-C, B-D, B-G, B-H, B-J, B-K, B-K (IPS), B-L, B-M MP



BOMBILLA RELOJ INSTRUMENTOS | BULB WATCH INSTRUMENTS | LAMPADINA OROLOGIO STRUMENTI | AMPOULE ROUGE

REF	OEM	
REC863946	863946	12V 1.2W Rojo. Compatible con casi todos los instrumentos. Red. Compatible with almost all instruments. Rosso. Compatibile con quasi tutti gli strumenti. Rouge. Compabile avec presque tous les instruments.



COMPRESOR | COMPRESSOR | COMPRESSORE | COMPRESSEUR

MÓDULO ELECTRÓNICO | ELECTRONIC MODULE | MODULO ELETTRONICO | MODULE ELECTRONIQUE

REF	OEM	
RM860993	860993 860433 860434 860435	KAD42A - KAMD42A (-2204202416)
RM881797	881797 872616	KAD42A - KAMD42A (2204202417+) KAD32, PA



EMBRAGUE COMPRESOR | SOLENOID CLUTCH | FRIZIONE COMPRESSORE | EMBRAYAGE DE COMPRESSEUR

REF	OEM	
RM3581724	3581724 3581062 860786	D4-260 KAD32P-A KAD43P-A KAD42 KAD44 KAD300





RM85108974
P. 592

MOTORES DE ARRANQUE — STARTERS — MOTORINI AVVIAMENTO — DÉMARREUR

Motor de arranque para substituir a todos los motores de tamaño pequeño con tornillos fijación en diagonal excepto los 7.4L

Starter to replace all the little engines with diagonally fixation screws exepting 7.4L.

Motorino d'avviamento per sostituire tutti i motori V 6 e V8 con motorini con viti di supporto trasversali eccetto i motori 7.4L

Démarreur de remplacement pour les moteurs GM 4L V6 et V8 avec des vis de fixation décalées sauf 7.4L

REF	OEM						OEM	
REC50-863007A1	3885317 3857747 3660566	12V 1.4 kW	11	14"	REC3859054	4 cyl V6 & V8 3.0L	REC10-861788	10-861788





Motor de arranque Heavy Duty. Tornillos de fijación en diagonal.

Starter with diagonally fixation screws.

Motorino d'avviamento Heavy Duty con viti di supporto trasversali.

Démarreur à usage intensif. Vis de fixation décalées.

REF	OEM						OEM	
REC3885317	3860764	12V 1.7 kW	11	14"	RECPG260	V6 & V8 7.4L	REC10-861788	10-861788





REF	OEM						
REC3854190	3854190 841066	1.4 kW 12V	10		REC0987883	FORD 5.0 & 5.8L	2



Tornillos de fijación en diagonal.

Starter with diagonally fixation screws.

Viti di supporto trasversali.

Vis de fixation décalées

REF	OEM						OEM	
REC50-99418A2	3850525 3853982	12V	9	14 1/4"	REC3853869	V6 & V8	REC10-861788	10-861788





Motor de arranque pequeño 4 en línea.

Starter Clockwise for 4L.

Viti di supporto trasversali

Démarreur pour moteur 4 Cyl en ligne. Vis de fixation paralelles

REF	OEM						OEM	
REC50-806965A4	3854750 3856003	12V 1.4 kW	11	12 3/4"	REC3859054	V6 & V8	MP0180-001	
							REC10-861788	10-861788



MP0180-001



REC10-861788



REF	OEM						OEM
REC50-8M0090697	3862308	12V 1.4 kW	11	12 3/4"	REC3859054	3.0L V6, V8	MP0180-001
							REC10-861788 10-861788


MP0180-001


REC10-861788



Contrarrotación o montaje en campana.

Starter counter clockwise.

Controrotante, posizionato nella campana.

Contre-rotation ou montage sur cloche.

REF	OEM			
REC50-808011A05	21129980 3862985	12V 1.4 kW	9	4, 6 & 8 cyl 5.7 MIE / 6.2 MIE.



REF	OEM			
REC50-97499A2	841377	12V 1.4 kW	9	4, 6 & 8 cyl 4 in line mod.470



REF	OEM			
REC21323043	21323043 3583555 3801351 3803929	12V 1.4 kW	9	D2-50, 55, 60, 75



REF	OEM			
REC21302969	21302969	12V 1.4 kW	9	2030 D1-30 D2-40



REF	OEM			
REC3827444	874385 3827444	24V 6 kW	12	TAD1240, 1241, 1242, 1250, 1251, 1252 D12



REF	OEM			
REC873549	872241 859593	12V 1.1 kW	9	HITACHI VALEO AQ120, 125, 145, 131, 151, 171, 251A, 2001, 2002, 2003



REF	OEM			
REC3840888	3840888 3803904	12V 0.95 kW	8	MD2010A, B, C, D MD2020A, B, C, D D1-13, B, F D1-20, B, F



REF	OEM			
REC3581774	3581774 188486 8599252	12V 3.1 kW	11	VALEO AQ30, 31, 40, 41 AD30, 31, 40, 41 TAMD30, 31, 40, 41, 42, 43, 44, 300

REF	OEM
REC968048	968048



REF	OEM			
REC3848965	3848965 3801204 30782228	12V	9	D3-110 --> D3-190



REF	OEM			
REC21423488	21423488 3801296 3803938 3803648 3588491 874501 3803855 3804296	12V	11	D4, 6



DESCONECTADOR DE SEGURIDAD — CUT OFF SWITCH — SCONETTATORE DI SICUREZZA — COUPE CIRCUIT DE SECURITE

REF	OEM	
REC40970	3817092	D3, D4, D6, V6, V8
REC40990	22027280	



REC40970

new



REC40990

LLAVES DE ARRANQUE | START KEYS | CHIAVE DI AVVIAMENTO | CONTACTEUR DE DEMARRAGE

REF	OEM	A	
REC3587071	3587071		
RM3587072	3587072		
GS11152	856659	28 mm	3

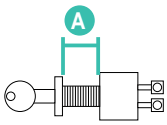



GS11152



REC3587071



RM3587072

ALTERNADORES | ALTERNATORS | ALTERNATORI | ALTERNATEURS

ALTERNADORES | ALTERNATORS | ALTERNATORI | ALTERNATEUR

REF	OEM			
REC3884858	3884858 3803577 3803940	12V 130A	D12, 31, 41, 61, 62, 63, 71, 72, 74	



REF	OEM		6 (50 mm)	
REC8676498	8676498 3803645	12V 140 A	SERPENTÍN GROOVE PULLEY SERPENTINA SERPENTINE	D3-110 --> D3-190



REF	OEM			
REC874502	874502 3803650 3840181 3803911 3587216 3803846 3819662 3803903	12V 115 A	6 (50 mm SERPENTÍN GROOVE PULLEY SERPENTINA SERPENTINE	D1-13, B, F D1-20, B, F D1-30, B, F D2-40, B, F D2-55, C, D, E, F D2-60F D2-75, B, C, F D4 D6



Alternador tipo Delco. Con terminal cuentavueltas y polea simple. Regulador atuoexcitante

Delco Type Alternator. With tachometer terminal & simple pulley Self-exciting regulator.

Alternatore tipo Delco. Con terminale per contagiri e puleggia singola.

Alternateur de type Delco. Avec borne de compte tours et poulie unique.

REF	OEM		6 (50 mm)	
REC841769	873770	12V 63 A	SIMPLE SINGLE SINGOLA SIMPLE	D1-30, B, F D2-40, B, F D2-55, C, D, E, F D2-60F D2-75, B, C, F D4 D6

RED +
CASE -
BLACK exc
WHITE tach



REF	OEM			REG.	
REC3860769	3860769 3854809	12V 55A	SIMPLE SINGLE SINGOLA SIMPLE	INTERNO INTERNAL INTERNO INTERNE	GM 3.0, 4.3, 5.7, 7.4, 8.2 Ford 5.0, 5.8



REF	OEM			
			5	
REC31419556	31419556 30667118 30659131	12V 150A	SERPENTÍN GROOVE PULLEY SERPENTINA SERPENTINE	D3-110 --> D3-220



MANDO

REF	OEM			REG.	
REC3860082	3862612 3860798	12V 65A	SERPENTÍN GROOVE PULLEY SERPENTINA SERPENTINE	INTERNO INTERNAL INTERNO INTERNE	8.1GiA, B, BF, C, CF, D, DF 8.1GXi-A, AF, B, BF, C, CF 8.1GXil-A, B, C 8.1GSi-A, 8.1Gil-A, B, C, D.
REC3860171	83857561 3860171		SIMPLE SIMPLE PULLEY NORMALE SIMPLE		3.0, 4.3, 5.0, 5.7, 5.8, 7.4, 8.2
REC3857813	3857813		SERPENTÍN GROOVE PULLEY SERPENTINA SERPENTINE		3.0, 4.3, 5.0, 5.7, 5.8, 7.4, 8.2



REC3860082



REC3860171



REC3857813

VALEO

Prácticamente para todos los motores diesel y gasolina con alternador.
No incluye polea RM841812

For almost all diesel and gas engines with alternators
PULLEY RM841812 not included.

Utiliazzabile per la maggior parte dei motori diesel e benzina con alternatore.
Non incluso puleggia RM841812

Pratiquement pour tous les moteurs diesel et à essence avec alternateur.
Sans poulie RM841812

REF	OEM			OEM	REG.
REC873770	873770	12V 60A	RM841812	841812	INTERNO INTERNAL INTERNO INTERNE





DELCO

REF	OEM			REG.	
REC3862612	3862612	12V 65A	SIMPLE SIMPLE PULLEY NORMALE NORMAL	INTERNO INTERNAL INTERNO INTERNE	4.3 GLM - E, EF 5.0GL - F, FF
REC3884950	3862665 3884950 3862613		6 SERPENTÍN GROOVE PULLEY SERPENTINA SERPENTINE		3.0GLP-A, B 3.0GLM-A, B 4.3 & 5.7 EFI



TRIM

MOTOR TRIM COMPLETO — TRIM ENGINES ASSY — MOTORI TRIM COMPLETO — MOTEUR TRIM COMPLET

REF	OEM		MOTOR ENGINE MOTORE MOTEUR		
REC3586765	3586765 854346 3857265 3861027	12V	REC854525	2	Para colas 280-290 y versiones antiguas SX. For 280-290 drives and SX early versions. Fine thread. Per piedi 280-290 e versione vecchia SX. Pour embases 280-290 et versions anciennes SX. (1976-05)



REF	OEM		MOTOR ENGINE MOTORE MOTEUR		
REC3587079	3587079 3857079 3857489 3858069 3860879	12V	REC3861575	2	Para colas SX última versión con rosca gruesa. Complete trim motor for SX drive late model with coarse thread. Per piedi SX ultima versione. Pour embases SX dernières versions.



REF	OEM			
REC852928	3586765 852928	12V	3	Modelo antiguo Old Style Modello vecchio Modèle ancien (1977-00)



MOTOR TRIM HIDRAULICO — HYDRAULIC TRIM MOTOR — MOTORI TRIM IDRAULICO — MOTEUR DE TRIM HYDRAULIQUE

REF	OEM		KIT			
REC854525	3858071	12V	REC3586765	2	4 mm	Para colas 280-290 y versiones antiguas SX. For 280-290 drives and SX early versions. Fine thread. Per piedi 280-290 e versione vecchia SX. Pour embases 280-290 et versions anciennes SX. (1976-05)



MOTOR TRIM MECÁNICO | MECHANICAL TRIM MOTOR | MOTORI TRIM MECANICO | MOTEUR DE TRIM MECANIQUE

REF	OEM			
REC850834	850834	12V	2	ROLL PIN TYPE



MOTOR TRIM SX | SX TRIM MOTOR | MOTORI TRIM SX | MOTEUR DE TRIM SX

REF	OEM				
REC3853945	3853945	12V	2	3	(1994+) 3.0 & 8.2L



MOTOR TRIM /TILT | TRIM/TILT MOTOR | MOTORI TRIM / TILT | MOTEUR DE TRIM /TILT

REF	OEM				KIT	
REC3861575	3861575	12V	2	2.8 mm	REC3587079	Para colas SX última versión con centros de tornillos a 58,4 mm. Later version 2.3" bolt centers w/coarse thread Per piedi SX ultima versione con misura interna delle viti da 58,4 mm. Pour les embases SX, dernière version avec entraxe des vis à 58,4 mm. DPH, DPR



CONVERTIDOR DE 3 A 2 CABLES | 3 TO 2 WIRE WIRED CONVERTER | CONVERTITORE CAVI DA 3 A 2 FILI | FAISCIEAU CONVERTISSEUR 3 À 2 FILS

REF
REC84-819514T26

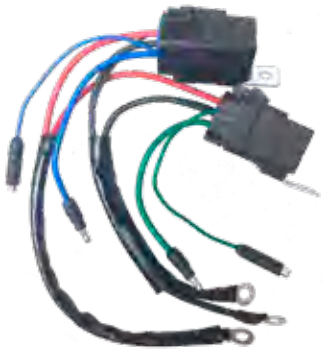

DEPÓSITO TRIM | RESERVOIR TRIM | VASCHETTA TRIM | RESERVOIR TRIM

REF	OEM		Ø
REC18525A1	854531	1	
REC883166A2	3861570	4	97 mm
REC3858077	3858077	4	99 mm



REC18525A1



REC883166A2
REC3858077



P. 24

SENSOR TRIM — TRIM SENSOR — SENSORE TRIM — SONDE DE TRIM

REF	OEM	
REC22314183	873531 22314183 828726	290, SP, DP

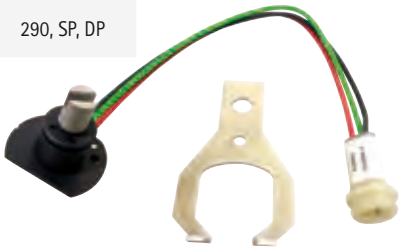

REF	OEM	
REC21484383	21484383 3841840	SX-A



REF	OEM		
REC3594989	3594989 3861837 3854842 3863129	2	SX-M, LT, MDB, MHP, MACLT, MAC, MDC, MBAC



REF	OEM	
REC3858212	21652399 3858212	SX (reloj digital europeo) (digital european gauge) (strumento digitale europeo) (Jauge digitale europe)



REF	OEM		
REC3863007	3849411 3863007 3849413 3855535	3	SX (reloj analógico europeo) (digital analogic gauge) (strumento analogico europeo) (horloge analogique european)



SOPORTE SENSOR TRIM — TRIM SENSOR SUPPORT — SUPPORTO SENSORE TRIM — SUPPORT SONDE DE TRIM

REF	OEM
REC3852555	3852555



PULSADOR TRIM MANDO — TRIM CONTROL SWITCH — INTERRUTTORE DI CONTROLLO DEL TRIM — BOUTON-POUSSOIR TRIM

REF	OEM
REC3856844	3856844 3856839



INTERRUPTOR TRIM — TRIM SWITCH — INTERRUTTORE TRIM — INTERRUPTEUR DE TRIM

REF	OEM	
REC3855650	3855650 876317 853846	DP-D1, C, E, G DPX SP-C1, E SX



TUBO CILINDRO TRIM | TRIM CYLINDER TUBE | TUBO CILINDRO TRIM | TUBE VERIN DE TRIM

REF	
RMTUBOVOLVO	Pistones antiguos | Old piston: Pistone vecchio | Pistones anciennes: 852755, 854610, 853308, 853309, 854550



PISTON TRIM | PISTON TRIM | PISTONE TRIM | VERINS DE TRIM

REF	OEM	
RM3857471	3857471	SX-MLT, MACLT



REF	OEM
RM3860881	3860881 872837



FULL TILT

REF	OEM		
REC22187386	22187386 3889955	SX-A, DPS-A	ESTRIBOR STD DESTRA TRIBORD
REC22187385			BABOR PORT SINISTRA BABORD



REF	OEM		
REC21840806	21840806 3888301 3857470	DPH, DPR	ESTRIBOR STD DESTRA TRIBORD
REC22121309			BABOR PORT SINISTRA BABORD



HERRAMIENTA PARA TUERCA | TOOL FOR END NUT | STRUMENTO PER DADO | CLE POUR ECROU DE VERIN DE TRIM

REF	PISTONES PISTONS PISTONI VERINS
REC19876	RM3860881 RM872612-7



KIT PISTON TRIM | PISTON TRIM KIT | PISTONE TRIM KIT | KITS VERINS DE TRIM

REF	OEM	
RM3885196	3885196 3850683	Para substituir los pistones (3852414) de colas SX To replace the original piston (3852414) Per sostituire i pistoni del piedi SX (3852414) Remplace les vérins des embases SX (3852414)



REF	OEM	
RM872612-7	872612 854610 853439	Con terminal de horquilla. With terminal. Terminale a forcella Embout à fourche.



KIT REPARACIÓN TRIM · REAPIR KIT TRIM PISTON · KIT RIPARAZIONE PISTONE TRIM · KIT REPARATION VERIN DE TRIM

REF	PARA FOR PER POUR
RECKITDP	RM3860881





REF	PARA FOR PER POUR	
REC22169	REC21840806 REC22121309	DPH, DPR





REF	PARA FOR PER POUR
RECKITDP2	RM872612-7





REF	PARA FOR PER POUR	
REC22172	REC22187386 REC22187385	DPS-A SX-A



REF	PARA FOR PER POUR
REC19088	REC21840806 REC22121309





REF	PARA FOR PER POUR	
REC3854247	3854247	SX DP-SM SX-M, S, C



DESPIECE TRIM · TRIM COMPONENTS · ESPLOSO TRIM · COMPOSANTS DE TRIM

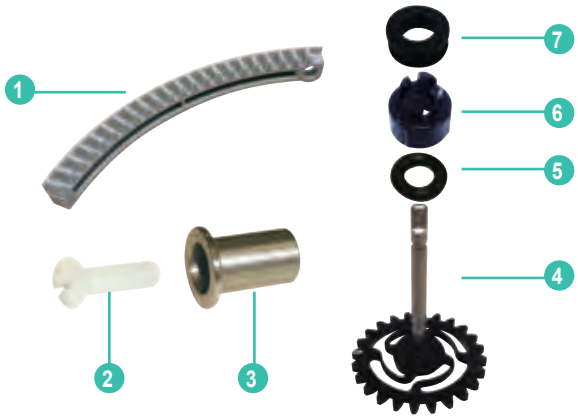

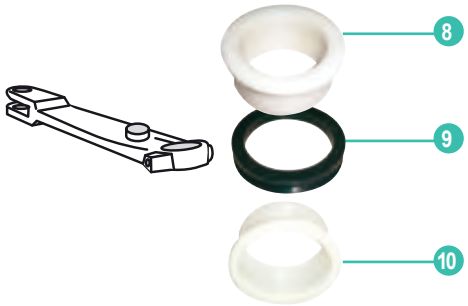

	REF	OEM				
1	REC872812	872812	CREMALLERA TRIM	GEAR SEGMENT	CREMAGLIERA	CREMAILLERE EN PLASTIQUE
2	REC853759	853759	TORNILLO CREMALLERA	SEGMENT SCREW	VITE CREMAGLIERA	VIS DE CREMAILLERE
3	REC853760	853760	CASQUILLO TORNILLO	RIVET NUT	BOCCOLA	ECROU RIVET
4	RM852984-4	852984	PIÑÓN INDICADOR	DRIVE GEAR	PIGNONE INDICATORE TRIM	ROULETTE DE TRIM
5	REC925050	925050	ARANDELA	O-RING	RONDELLA	JOINT TORIQUE
6	REC851430	851430	CASQUILLO	BUSHING	BOCCOLA	ENTRAINEMENT
7	REC966207	966207	RETÉN	SEAL	PARAOLIO	JOINT
8	RM872363	872363	CASQUILLO SUPERIOR (ESTRIADO)	UPPER BUSHING (SPLINE)	BOCCOLA SUPERIORE (SCANALATA)	BAGUE SUPERIEURE (CANNELEE)
	RM854705	854705	CASQUILLO SUPERIOR (CUADRADO)	UPPER BUSHING (SQUARE)	BOCCOLA SUPERIORE (QUADRATA)	BAGUE SUPERIEURE (CARREE)
9	REC839195	839195	RETÉN (HORQUILLA ESTRIADA)	RING (SPLINE)	PARAOLIO (FORCELLA SCANALATA)	JOINT (CANNELE)
	RM977313	977313	RETÉN (HORQUILLA CUADRADA)	RING (SQUARE)	PARAOLIO (FORCELLA QUADRATA)	JOINT (CARRE)
10	REC872362	872362	CASQUILLO INFERIOR (ESTRIADO)	LOWER BUSHING (SPLINE)	BOCCOLA INFERIORE (SCANALATA)	BAGUE INFERIEURE (CANNELEE)
	RM854704	854704	CASQUILLO INFERIOR (CUADRADO)	LOWER BUSHING (SQUARE)	BOCCOLA INFERIORE (QUADRATA)	BAGUE INFERIEURE (CARREE)

LATIGUILLOS TRIM SX-C, SX-R, SX-S | TRIM HOSES SX-C, SX-R, SX-S | TUBI TRIM SX-C, SX-R, SX-S | FLEXIBLES DE TRIM SX-C, SX-R, SX-S

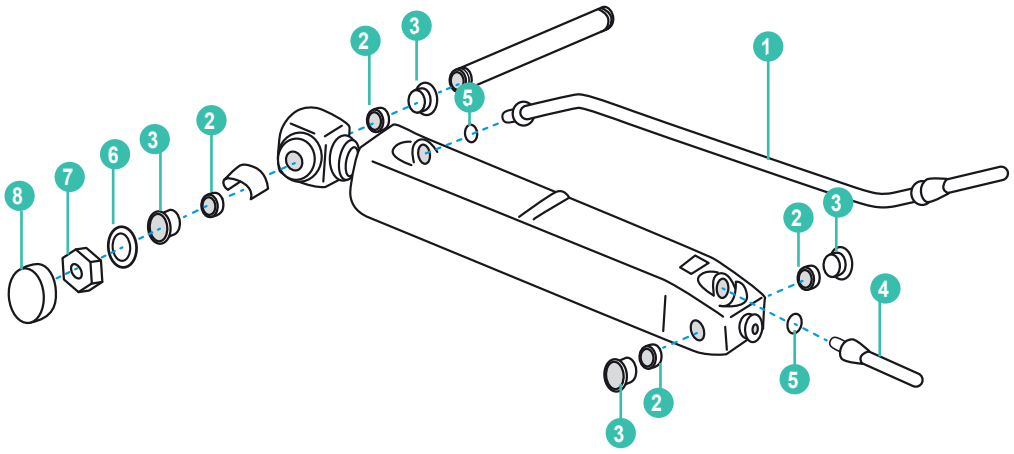

	REF	OEM				
1	REC3853854	3853854	LATIGUILLO TRIM ESTRIBOR BAJADA	TRIM HOSE STARBOARD DOWN	TUBO IDRAULICO DESTRA DISCESA	FLEXIBLE TRIBORD BAS
	REC3853856	3853856	LATIGUILLO TRIM BABOR BAJADA	TRIM HOSE PORT DOWN	TUBO IDRAULICO SINISTRA DISCESA	FLEXIBLE BABORD BAS
2	RM3853424	3853424	ARO	RING	O-RING	RONDELLE AXE DE VERIN
3	REC3853423	3853423	CASQUILLO HORQUILLA	BUSHING	BOCCOLA	BAGUE
4	REC3853855	3853855	LATIGUILLO TRIM ESTRIBOR SUBIDA	TRIM HOSE STARBOARD UP	TUBO IDRAULICO DESTRA SALITA	FLEXIBLE TRIBORD HAUT
	REC3853857	3853857	LATIGUILLO TRIM BABOR SUBIDA	TRIM HOSE PORT UP	TUBO IDRAULICO SINISTRA SALITA	FLEXIBLE BABORD HAUT
5	REC3852165	3852165	ARO TÓRICO	O-RING	O-RING	JOINT TORIQUE
6	RM3852573	3852573	ARANDELA	WASHER	RONDELLA	RONDELLE
7	REC11-859135	3852648	TUERCA	NUT	DADO	ECROU
8	RM3852958	3852958	TAPA	CAP	COPERCHIO	CACHE

LATIGUILLOS TRIM SX-M | TRIM HOSES SX-M | TUBI TRIM SX-M | FLEXIBLES DE TRIM SX-M

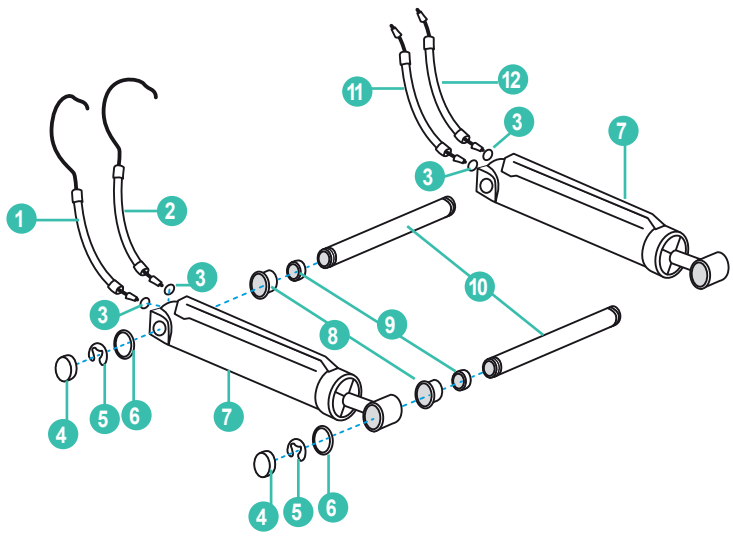

	REF	OEM				
1	REC3857523	3857523	LATIGUILLO TRIM	TRIM HOSE	TUBO IDRAULICO	FLEXIBLE DE TRIM
2	REC3853857	3853857	LATIGUILLO TRIM	TRIM HOSE	TUBO IDRAULICO	FLEXIBLE DE TRIM
3	REC3852165	3852165	ARO TÓRICO	O-RING	O-RING	JOINT TORIQUE
4	REC3857522	3857522	TAPA	CAP	COPERCHIO	CACHE
5	REC3857521	3857521	CLIP	CLIP	CLIP	CLIP
6	RM3857588	3857588	ARANDELA	WASHER	RONDELLA	RONDELLE
7	RM3857470	3857470	PISTÓN TRIM	TRIM PISTON	PISTONE TRIM	VERIN DE TRIM
8	REC3853423	3853423	CASQUILLO HORQUILLA	BUSHING	BOCCOLA	BAGUE
9	RM3853424	3853424	ARO	RING	O-RING	RONDELLE AXE DE VERIN
10	RM3857431	3857431	PASADOR	COTTER PIN	CHIAVISTELLO	AXE DE VERIN DE TRIM
11	REC3857524	3857524	LATIGUILLO TRIM	TRIM HOSE	TUBO IDRAULICO	FLEXIBLE DE TRIM
12	REC3853855	3853855	LATIGUILLO TRIM	TRIM HOSE	TUBO IDRAULICO	FLEXIBLE DE TRIM

LATIGUILLOS TRIM | TRIM HOSES | TUBI TRIM | FLEXIBLES DE TRIM

BOMBA --> TRANSOM | PUMP --> TRANSOM | POMPA --> TRANSOM | POMPE ---> PLATINE

REF	OEM
REC852839	852839



TRANSOM --> PISTÓN | TRANSOM --> PISTON | TRANSOM --> PISTONE | PLATINE --> VERINS

REF	OEM
RM857624	857624



BOMBA --> COLECTOR | PUMP --> MANIFOLD | POMPA --> DISTRIBUTORE | POMPE --> COLLECTEUR

REF	OEM	
RM3853825	3853825	SX



BOMBA --> PISTON | PUMP --> PISTON | POMPA --> PISTONE | POMPE --> VERIN

REF	OEM	
REC873228	873228	DP, DPX
REC873229	873229	
REC21945911	21945911 3884410	SX-A



REC873228



REC873229



REC21945911

COLECTOR --> CILINDRO BABOR (SUBIDA) | MANIFOLD --> CYLINDER PORT (UP) | COLETTORE --> CILINDRO SINISTRA (SALITA) | COLLECTEUR --> VERIN BABORD (HAUT)

REF	OEM	
REC3853857	3853857	SX



COLECTOR --> CILINDRO BABOR (BAJADA) | MANIFOLD --> CYLINDER PORT (DOWN) | COLETTORE --> CILINDRO SINISTRA (DISCESA) | COLLECTEUR --> VERIN BABORD (BAS)

REF	OEM		NO
REC3853856	3853856	SX	SXM, MAC, MDA, MDB, MLT
REC3857523	3857523	SX SXM, MAC, MDA, MDB, MLT DPS SXM, MAC, MDA, MDB, MLT	



REC3853856



REC3857523

COLECTOR --> CILINDRO ESTRIBOR (SUBIDA) | MANIFOLD --> CYLINDER STD (UP) | COLETTORE --> CILINDRO DESTRA (SALITA) | COLLECTEUR --> VERIN TRIBORD (HAUT)

REF	OEM	
REC3853855	3853855	SX



COLECTOR --> CILINDRO ESTRIBOR (BAJADA) | MANIFOLD --> CYLINDER STD (DOWN) | COLETTORE --> CILINDRO DESTRA (DISCESA) | COLLECTEUR --> VERIN TRIBORD (BAS)

REF	OEM		NO
REC3853854	3853854	SX	SXM, MAC, MDA, MDB, MLT SX/DPS
REC3857524	3857524	SX SXM, MAC, MDA, MDB, MLT	



REC3857524



REC3853854

CILINDRO --> BOMBA | CYLINDER -->PUMP | CILINDRO --> POMPA | VERIN --> POMPE

REF	OEM	
REC21721548	21721548 3809559	DPH-A, -B
REC21721550	21721550 3809560	DPR-A, -B

REC21721550





REC21721548

SOLENOIDES , RELÉS Y FUSIBLES | SOLENOID, RELAY & FUSES | SOLENOIDI, RELÉ E FUSIBILE | SOLENOIDE, RELAIS ET FUSIBLES

SOLENOIDES | SOLENOID | SOLENOIDI | SOLENOIDE

REF	OEM	
REC852565	852565	AQD30, 31, 40, 41 AQ131A, B, C, D AQ145A, B AQ151A, B, C AQ171A, C 175A, 205, 231, 260



REF	OEM		
REC3853839	3853839	12V	5.0 & 5.8 FORD FI/FL



SOLENOIDE DE PARADA INYECTORA | STOP SOLENOID | SOLENOIDI STOP | SOLENOIDE DE STOP

REF	OEM		
REC876614	876614	50A	KAD32P-A, 42A,42B, 42P-A, 43P-A, 44P-A, 44P-B, 44P-C, 300-A KAMD42B, 42P-A, 43P, 43P-A, 43P-B, 300-A TAMD22A, 22P-B, 31B, 31D, 31M-A, 31P-A, 31S-A, 41B, 41D, 42B, 42WJ-A, 41H-A, 41H-B, 41P-A, 41L-A, 41M-A, 42A AD31B, 31D-A, 31L-A, 31P-A, 31XD, 41B, 41D, 41L-A, 41P-A D41B, 41D, 41L-A TMD22-A, 22-B, 22P-C, 31D, 31L-A, 31B, 41D, 41L-A MD22A, 22A-A, 22L-A, 22L-B, 22P-B, 31A MS2A-E, 2B-A, 2B-R, 2A-E, 2B-L, 2L-E, 120S-E TM41B 120S-E

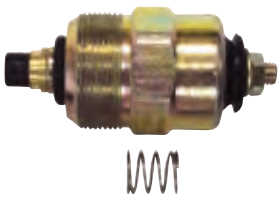

REF	OEM	
REC3584127	3584127	D1-13, B, F D1-20, B, F D1-30, B, F D2-40, B, F D2-55F, B, D, D, E D2-60F D2-75F, B, C



EXTENSOR DE SOLENOIDE PARA TERMINALES | SOLENOID EXTENSOR FOR TERMINALS | PROLUNGA TERMINALE PER SOLENOIDE | PROLONGATEUR POUR SOLENOIDE

REF
REC855314



SOLENOIDE ARRANQUE | STARTER SOLENOID | SOLENOIDI AVVIAMENTO | SOLENOIDE DÉMARRAGE

REF	OEM	⚡	STARTER
REC859618	859618		REC3581774
REC0987883	3854194	12V	REC3854190 RECRA122002
REC3859054			REC50-863007A1 REC50-8M0090697



REC859618



REC0987883



REC3859054

DELCO REMY

REF	
REC3853869	7,5 cm
REC13037	9,5 cm



RELÉ CAJA FUSIBLES | FUSES BOX RELAY | RELÉ DELLA SCATOLA FUSIBILE | RELAIS

REF	OEM	⚡	
REC3861376	3861376	12V	V6, V8 Modelos nuevos New models Modelli nuovi Nouveaux models



RELÉ STARTER TRIM/TILT | TRIM/TILT STARTER | RELÉ TRIM/TILT AVVIAMENTO | RELAIS DÉMARRAGE TRIM/TILT

REF	OEM	⚡	
RM3841366	3841366		4 cyl, V6, V8 Modelos nuevos New models Modelli nuovi Nouveaux modèles
REC1504952	1504952	12V 30A	131, 145, 175, 250 V8 TMD30, 40 Para | for | per | pour: TRI MEST-1089
REC3854138	3854138	12V	3.0, 4.3, 5.0, 5.7, 5.8, 7.4







RELÉ — RELAY — RELÉ — RELAIS

REF	OEM			
REC3861375	3861375	12V	3.0L, V6, V8 Modelos nuevos New models Modelli nuovi Nouveaux modèles	
REC1504952	3858809 1504952	12V 30A	(1998 SX-M-MAC, MDA, MLT) 3.0GLP-D 4.3GL-E, GL-EF, GXi-F, GXi-FF, OSi-F, OSi-FF 5.0GL-F, GL-FF, GXi-F, GXi-FF, Si-F, Si-FF, Gi-F/FF, GXi-G/GF, OSi-E/EF, OXi-E/EF, GXi-F, GXi-G 8.1Gi-G/GF, GXi-F/FF, OSi-C/CF, GiL-G, GXiL-F DPH-A, H-B, R-A EF drives SX-M TSKs (1998-05) SX-M DP-SM, (WT drives, PJX-C, PJX-S SX-M, MACLT, -MDA, -MDB, -MPH, -MTD, DP-E, DP-S, -S1, -S2, DP-SM, -SM) XDP-B MD22, 63, 71, 73, 74 30, 40, 61, 70 V8	
REC1324492	1324492	12V 30A	115, 130, 165 MD1, 21, 71	
REC876037	876037	12V 30A	2010, 2020, 2030, 2040 30, 31, 40, 41, 42, 102, V8	
REC841177	841177	12V 30A	V6, V8, 2001, 2002, 2003 AQ125B AQ131A, B, C, D AQ145B AQ151A, B, C	
REC22637542	22637542 846762 873740 860339	12V 70A	2003 MD22 D3 TMAD22 D30, 31, 32, 40, 41, 42, 43, 44	

RELÉ PARADA DE EMERGENCIA — EMERGENCY STOP RELAY — RELÉ ARRESTO DI EMERGENZA — RELAIS DU STOP

REF	OEM		
REC21400091	21400091 873765 11305263	12V	KAD D(EVC)



RELÉ BOMBA GASOLINA ELECTRICA — RELAY FOR FUEL ELECTRIC PUMP — RELE POMPA BENZINA ELETTRICA — RELAIS DE POMPE A ESSENCE

REF	OEM		
REC3857533	3857533	12V 30/40 A	4.3, 5.0, 5.7, 7.4, 8.2



FUSIBLE TÉRMICO MOTOR | IGNITION CIRCUIT BREAKER | FUSIBILE TERMICO MOTORE | FUSIBLE TERMIQUE MOTEUR

REF	OEM	
BS2141	841178	40A
BS2142	3854164	50A
BS2143	3854186	60A



FUSIBLE MOTOR TRIM | TRIM FUSE ASSY | FUSIBILE MOTORINI TRIM | FUSIBLE MOTEUR DE TRIM

REF	OEM	
REC88-79023T10		110A
RM88-79023A91		90A



FUSIBLE | FUSE | FUSIBILE | FUSIBLE

REF	OEM		
REC3819905	3819905 856355 853502 852939	55A	D22, 30, 31, 32, 40, 41, 42, 43, 44, 300 230, 250, 500, 501, 430, 431, 432 AQ131 --> AQ311



FUSIBLE ATM | ATM FUSE | FUSIBILE ATM | FUSIBLE ATM

REF		
AM603905	5 A	2
AM603910	10 A	2
AM603915	15 A	2
AM603920	20 A	2
AM603930	30 A	2



FUSIBLE ATC | ATC FUSE | FUSIBILE ATC | FUSIBLE ATC

REF		
BS5291	3 A	2
BS5299	4 A	2
BS5292	5 A	2
BS5293	7,5 A	2
BS5294	10 A	2
BS5295	15 A	2
BS5296	20 A	2
BS5297	25 A	2
BS5298	30 A	2

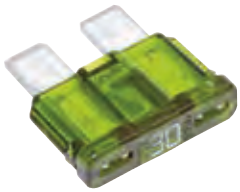

FUSIBLE MAXI | MAXI FUSE | FUSIBILE MAXI | FUSIBLE MAXI

REF		
BS5138	30 A	2
BS5139	40 A	2
BS5140	50 A	2
BS5141	60 A	2
BS5142	70 A	2
BS5143	80 A	2



SISTEMA ENCENDIDO
IGNITON SYSTEM

SISTEMA DI ACCENSIONE
SYSTÈME D'ALLUMAGE

BOBINAS — COILS — BOBINE — BOBINES

BOBINA DE ENCENDIDO — IGNITION COIL — BOBINA DI ACCENSIONE — BOBINE D'ALLUMAGE

REF	OEM	
REC3287677	3287677	AQ171A, C AQ251A, (1988-92)



REF	OEM	
REC3854002	3854002	4L, V6 & V8 DELCO



REF	OEM	
REC3859078	3859078	8.1L



REF	OEM	
REC3861985	3861985	4.3L GXI 5.0L GXI 5.7L GXI



REF	OEM	
REC3854161	3854161	FORD 5.0L / 302Ci EFI 5.8L / 351Ci EFI (1993-96)



REF	OEM	
REC3861267	3861267	8.1Gi-A, B, BF, C, CF, D, DF 8.1GSi-A 8.1GXi-A, AF, B, BF, C DPX375, 420



REF	OEM	
REC21436799	21436799	Delco HVS V6, V8 (Versión moderna | Late models | Versione moderna | Versions modernes) GXI

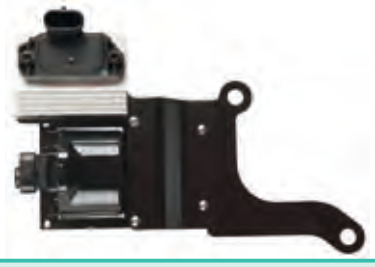

ENCENDIDO ELECTRÓNICO — ELECTRONIC IGNITION — ACCESIONE ELETTRONICA — BOBINE D'ALLUMAGE ÉLECTRONIQUE

NO USA RESISTENCIA EXTERNA
HEI
Sistema de encendido Thunderbolt

USE WITHOUT EXTERNAL RESISTOR
HEI
Thunderbolt ignition system

NON UTILIZZA RESISTENZA ESTERNA
HEI
Sistema di accensione Thunderbolt

N'UTILISE PAS DE RÉSISTANCE EXTERNE
HEI
Système d'allumage Thunderbolt.

REF	OEM
REC300-00879	3852217



USA RESISTENCIA EXTERNA
HEI
DELCO 1115202

USE WITH EXTERNAL RESISTOR
HEI
DELCO 1115202

UTILIZZA RESISTENZA ESTERNA
HEI
DELCO 1115202

UTILISE UNE RÉSISTANCE EXTERNE
HEI
DELCO 1115202

REF	OEM
REC1463-9382	835998

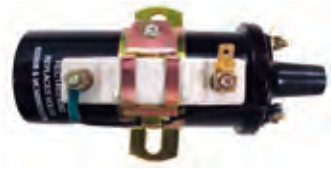

MÓDULOS IGNICIÓN IGNITION MODULES MODULI AVVIAMENTO MODULES D'ALLUMAGE

REF	OEM	
REC3854001	3854001	4L, V6 & V8 DELCO



REF	OEM	
REC3858984	3858984	V6 & V8 Vortec



REF	OEM	
REC3854003	3854003	4L, V6 & V8 DELCO



BUJÍAS SPARK PLUG CANDELE BOUGIES

BUJÍAS SPARK CANDELE BOUGIES

	CHAMPION
SERIES AQ	
120 (B21)	CHARN7YC
125A, B 145	CHARN7YC
130, A, B, C, D	CHARL82YC
131, A, B,C ,D	CHARN7YC
140, A 145A, B	CHARN7YC
151A, B, C	CHARN7YC
165A	CHARL82YC
170, A, B, C	CHARL82YC
171A, C	CHARN9YC
175, A	CHARV15YC4
180	CHARJ12YC
190, A FORD	CHARV15YC4
200, A, B, C, D, F 205A	CHARV15YC4
210A (177315+)	CHARV9YC
211A, DP, 231D, P 271D, P	CHARV15YC4
255, A, C	CHARV15YC4
255D 305 CID 225E, F	CHARV15YC4
230A, B 250A, B	CHARN7YC
231A, B 240A FORD 255B 280A	CHARV15YC4
260A, B 271A, B, C, D 290, A, B	CHARV15YC4
311, A, B 430, 531, 500A, 501A	CHARV15YC4
570A, 571A, 572, 740A	CHARV15YC4
SERIES B/BB	
18A, C 30B	CHARL82C
100, A	CHARL86C
115A, B 165A	CHARL82YC
140	CHARN9YC
145, A	CHARN7YC
225, A, B, C 231A	CHARV15YC4
260, A, B, C 261	CHARV15YC4

	CHAMPION
SERIES OCEAN	
GM V-6, 2002 4.3L OSi-XDP	CHARS12YC
GM V-8, 2002 5.0L OSi-XDP	CHARS12YC
GM V-8, 2002 5.7L OSi-XDP	CHARS12YC
GM V-8, 2002 5.7L OSXi-XDP	CHARS12YC
PJX WATER JET	
4.3L Gi, GS	CHARS12YC
SERIES SX COBRA	
3.0L GS	CHARS12YC
4.3L GIPNCA	CHARV15YC4
4.3L GIPNCS	CHARS12YC
5.0L FL	CHARV15YC4
5.0L Fi, Gi Gen 1+, GL Gen 1+	CHARS12YC
5.7L Gi, GL, GLi, GS	CHARV15YC4
5.7L GS Gen 1+, GSi Gen 1+	CHARS12YC
5.8L FL	CHARV15YC4
5.8L Fi, FSi	CHARS9YC
7.4L GL, Gi	CHARV15YC4
7.4L Gi L29	CHARS12YC
SERIES C	
C5, 10, 23	CHARD16
SERIES DPX	
7.4L DPX 385	CHARV15YC4
8.2L DPX 415	CHARV15YC4
SERIES DUOPROP	
4.3L GIPNCA	CHARV15YC4
4.3L, GIPNCS	CHARS12YC
5.0L FL	CHARV15YC4
5.0L Fi, 5.0L GL Gen 1+	CHARS12YC
5.0L Gi GEN 1+	CHARS12YC
5.7L Gi, GL, GLi, GS	CHARV15YC4

	CHAMPION
5.7L GS Gen 1+, GSi Gen 1+	CHARS12YC
5.8L FL	CHARV15YC4
5.8L FSi	CHARS9YC
7.4L Gi, GL	CHARV15YC4
7.4L Gi L29	CHARS12YC
7.4L GSi, 8.2L GSi	CHARV15YC4
SERIES ALTA CILINDRADA **HIGH HORSEPOWER SERIES** **SERIE ALTO CILINDRO** **SERIE HAUTE CILINDRÉE**	
SERIES M	
MB36A, B	CHARJ12YC
MB250S	CHAP8Y
PZ-200	CHARV15YC4
SERIES INTRABORDA **INBOARD SERIES** **SERIE ENTROBORDO** **SERIE INBORD**	
2002, 5.7L Gi	CHARV15YC4
2002, 5, 5.7L GSi, GXi	CHARS12YC
5.8L FL/HS1	CHARV15YC4
5.8L FSi, HS1	CHARS9YC
7.4L GL, Gi/HS1	CHARV15YC4
7.4L Gi L29 STANDARD	CHARS12YC
7.4L Gi L29 PLATINUM	CHARS12PYP
2002, 8.1L Gi/GSi	CHARS15LYC
2002, 8.2L GL/HS1	CHARV15YC4



BUJÍAS SPARK CANDELE BOUGIES

	STANDARD	IRIDIUM
SERIES AQ		
145A, B	NGKBPR7ES	NGKBPR7EIX
130, A, B, C, D	NGKBP7HS	NGKBPR7EIX
131, A, B, C, D, 140A	NGKBPR7ES	NGKBPR7EIX
150, A, B	NGKXR5	
151A, B, C	NGKBPR7ES	NGKBPR7EIX
165A 170, A, B, C	NGKBP7HS	NGKBPR7EIX
171A, C	NGKBPR6ES	NGKBPR7EIX
175, A	NGKYR5	NGKYR5IX
180	NGKXR5	NGKYR5IX
190	NGKYR5	NGKYR5IX
200, A, B, C, D, F	NGKUR5	NGKUR6IX
210A (177315+)	NGKUR6	NGKUR6IX
211/DP 211A	NGKYR5	NGKYR5IX
225B, A, B, C, D	NGKUR6	NGKUR6IX
225E, F	NGKYR5	NGKYR5IX
230A, B 250A, B	NGKBPR6ES	NGKBPR6EIX
231/DP 231A, B	NGKYR5	NGKYR5IX
240A 255B	NGKUR6	NGKUR6IX
260, A, B	NGKBR6FS	NGKBR6FIX
271/DP	NGKYR5	NGKYR5IX
271A, B, C, D	NGKBR6FS	NGKBR6FIX
280A	NGKUR6	NGKUR6IX
290A, B 311A, B	NGKBR6FS	NGKBR6FIX
430, 500A, 501A, 531, 570A	NGKBR6FS	NGKBR6FIX
571A, 572, 740A	NGKBR6FS	NGKBR6FIX
SERIES DPX		
5.7L DPX 375	NGKTR55	NGKTR55IX
7.4L DPX 385 GSi EFI	NGKBR6FS	NGKBR6FIX
8.1L DPX 420	NGKTR55	NGKTR55IX
8.2L DPX 415 GSi EFI	NGKBR6FS	NGKBR6FIX
SERIES DUOPROP		
4.3L Gi EFI (.460 Rch.)	NGKBPR6FS	NGKUR6IX
4.3L Gi EFI (.708 Rch.)	NGKBPR6EFS	NGKTR6IX
4.3L GL 2 bbl, GS 4 bbl	NGKBPR6EFS	NGKTR6IX
5.0L Fi EFI	NGKTR5	NGKTR5IX
5.0L FL 2bbl	NGKUR4	NGKUR4IX
5.0L Gi,GL Gen 1+	NGKBPR6EFS	NGKTR6IX
5.7L Gi EFI	NGKBPR6FS	NGKUR6IX
5.7L GL 2 bbl	NGKBR6FS	NGKBR6FIX
5.7L GLi EFI	NGKBPR6FS	NGKTR6IX
5.7L GS 4 bbl	NGKBR6FS	NGKBR6FIX

	STANDARD	IRIDIUM
5.7L GS, GSi Gen 1+	NGKBPR6EFS	NGKTR6IX
5.7L GXi	NGKTR55	NGKTR55IX
5.8L FL 4 bbl	NGKUR4	NGKUR4IX
5.7L FSi EFI HO	NGKBPR6EFS	NGKTR6IX
7.4L Gi EFI, Gi L29	NGKBPR6EFS	NGKTR6IX
7.4L GL 4 bbl	NGKBR6FS	NGKBR6FIX
7.4L GSi EFI	NGKBR6FS	NGKBR6FIX
8.1L GXi	NGKTR55	NGKTR55IX
8.2L GSi EFI	NGKBR6FS	NGKBR6FIX
PJX WATER JET		
4.3L Gi EFI	NGKBPR6EFS	NGKTR6IX
4.3L GS 4 bbl	NGKBPR6EFS	NGKTR6IX
SX COBRA GRANDE		
3.0L GS 2 bbl	NGKBPR6EFS	NGKTR6IX
4.3L Gi EFI (.460 Rch.)	NGKBPR6FS	NGKUR6IX
4.3L Gi EFI (.708 Rch.)	NGKBPR6EFS	NGKTR6IX
4.3L GL 2 bbl	NGKBPR6EFS	NGKTR6IX
4.3L GS 4 bbl	NGKBPR6EFS	NGKTR6IX
5.0L Fi EFI	NGKTR5	NGKTR5IX
5.0L FL 2 bbl	NGKUR4	NGKUR4IX
5.0L Gi Gen 1+	NGKBPR6EFS	NGKTR6IX
5.0L GL Gen 1+	NGKBPR6EFS	NGKTR6IX
5.7L Gi EFI	NGKBPR6FS	NGKUR6IX
5.7L GL 2 bbl	NGKBR6FS	NGKBR6FIX
5.7L GLi EFI	NGKBPR6FS	NGKUR6IX
5.7L GS 4 bbl	NGKBR6FS	NGKBR6FIX
5.7L GS Gen 1+	NGKBPR6EFS	NGKTR6IX
5.7L GSi Gen 1+	NGKBPR6EFS	NGKTR6IX
5.7L GXi	NGKTR55	NGKTR55IX
5.8L FL 4 bbl	NGKUR4	NGKUR4IX
5.8L FSi EFI HO	NGKBPR6EFS	NGKTR6IX
7.4L Gi EFI	NGKBPR6FS	NGKUR6IX
7.4L Gi L29	NGKBPR6EFS	NGKTR6IX
7.4L GL 4 bbl	NGKBR6FS	NGKBR6FIX
SERIES OCEAN		
4.3L OSi-XPD	NGKTR5	NGKTR5IX
5.0L OSi-XPD	NGKTR5	NGKTR5IX
5.7L OSi-XPD	NGKTR5	NGKTR5IX
5.7L OOXi-XPD	NGKTR5	NGKTR5IX





P. 36

JUEGOS DE CABLES, ALTO RENDIMIENTO

Núcleo del cable de Kevlar de 8 mm antimagnético. Funda de silicona amarilla. Terminales bujías con muelle de acero inox. Terminal del distribuidor de cobre. Terminales bobina. Silicona resistente a altas temperaturas. Garantía de 5 años.

HD SPARK PLUG WIRE SET

Antimagnetic Kevlar core. Yellow silicone boot & jacket. SS snaplock. Brass distributor terminal. Coil terminals. High resistant silicone. 5 year warranty.

KIT CAVI CANDELE, ALTE PRESTAZIONI

Nucleo del cavo di Kevlar da 8 mm antimagnetico. Copertura di silicone gialla. Terminali candele con molle di acciaio inox. Terminale lato spinterogeno in rame. Terminale Bobine. Silicone resistente alle alte temperature. Garanzia di 5 anni.

KIT FAISCEAU DE BOUGIE HAUTE PERFORMANCE

Noyau en Kevlar antimagnétique. Gaine en silicone jaune.Embout de BOUGIES d'allumage avec ressort en acier inoxydable. Terminal de distribution en laiton. Bornes de bobine. Silicone haute résistance. Garantie de 5 ans.

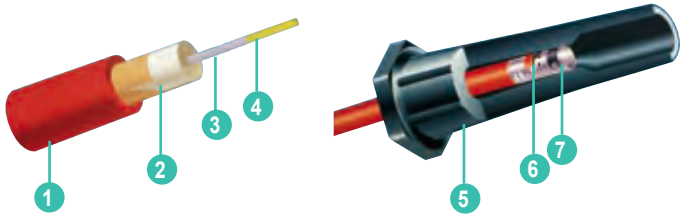

1	CAMISA DE SILICONA DE 8 MM	8 MM SILICONE JACKET	RIVESTIMENTO IN SILICONE DA 8 MM	GAINE SILICONE DE 8MM
2	LÁTEX RESISTENTE ALTAS TEMPERATURAS	HEAT RESISTANT LATEX	LATEX RESISTENTE ALLE ALTE TEMPERATURE	LATEX RÉSISTANT À HAUTE TEMPÉRATURE
3	ACERO INOX	STAINLESS STEEL	ACCIAIO INOX	ACIER INOX
4	NÚCLEO DE KEVLAR	KEVLAR CORE	NUCLEO DE KEVLAR	NOYAU DE KEVLAR
5	CAPUCHÓN DE SILICONA	SILICONE JACKET	RIVESTIMENTO IN SILICONE	CAPUCHON EN SILICONE
6	TRENZADO ESPECIAL FIBRA DE VIDRIO	FIBERGLASS BRAIDING	FIBRA DI VETRO	TRESSE EN FIBRE DE VERRE
7	TERMINAL DE ACERO INOX	STAINLESS STEEL TERMINAL	TERMINALE DI ACCIAIO INOX	TERMINAL EN ACIER INOX

	ARRANQUE IGNITION AVVIAMENTO ALLUMAGE			
	CYL	CONVEN.	ELECT.	REF	OEM
4L. Base Volvo	4	✓		REC15-404	875571
V6 Base GM	6	✓		REC15-604	3857166
V8 Base GM	8	✓		REC15-801	3857166
V8 Base GM (Tapa delco plana | Flat Cap | Calotta Delco piatta | tête d'allumeur plane)	8	✓		REC15-806	3857166
4L. Base GM	4		✓	REC15-405	3888324
V6 Base GM	6		✓	REC15-601	3888325
V6 Base GM-MPI	6		✓	REC15-606	3888327
V8 Base GM	8		✓	REC15-804	3888326
V8 5.0/5.7 GM-MPI	8		✓	REC15-815	3888328
V8 8.1L	8		✓	REC15-808	3861295



DISTRIBUIDOR — DISTRIBUTOR — SPINTEROGENO — ALLUMEUR

6 CYL AQ170

TAPA — CAP — CALOTTA — TÊTE D'ALLUMEUR

REF	OEM	DELCO	
REC241669	241669	Delco Bosch Ø 73mm	AQ165, 170
REC243658	243658	Delco Bosch Ø 90mm	AQ170B, C



REC241669



REC243658

PLATINO — POINT — PUNTINE — VIS PLATINÉES

REF	OEM	
RM243801	243801	AQ170 (Versión moderna | Late models | Versione moderna | Version moderne)



ROTOR — ROTOR — ROTORE — DOIGT D'ALLUMEUR

REF	OEM		
REC238258	238258	AQ170	Bosch 6 cyl.



4 CYL

1 TAPA / CAP / CALOTTA / TÊTE D'ALLUMEUR

REF	OEM
REC243797	243797
REC841263	841263
REC870690	870690


REC243797


REC841263


REC870690

2 PLATINO / POINT / PUNTINE / VIS PLATINÉES

REF	OEM
REC243799	243799
REC1306169	1306169




REC1306169

3 ROTOR / ROTOR / ROTORE / DOIGT D'ALLUMEUR

REF	OEM
REC243903	243903



4 CONDENSADOR / CONDENSER / CONDENSATORE / CONDENSATEUR

REF	OEM
REC841262	841262 241710


REC841262

KIT

REF
REC9-29307


REC243903 + REC243799 + REC841262

	1	2	3	4
AQ115, 120B, 130, 140A	REC243797	REC243799	**REC243903**	REC841262
AQ120B AQ125A, B AQ131A, B, C, D AQ140A AQ145A, B AQ151A, B, C AQ230A AQ250A	REC841263	REC243799	**REC243903**	
AQ115A, B AQ120 AQ130A, B, C, D	REC870690	REC1306169	**REC243903**	REC841262

PRESTOLITE

1 TAPA / CAP / CALOTTA / TÊTE D'ALLUMEUR

REF	OEM
REC392-9086T	841926
REC392-9766	3853815
REC835702	835702



REC392-9086T



REC392-9766



REC835702

2 PLATINO / POINT / PUNTINE / VIS PLATINÉES

REF	OEM
REC8M6001219	835705



3 ROTOR / ROTOR / ROTORE / DOIGT D'ALLUMEUR

REF	OEM
REC3853801	3853801
REC834975	834975



REC3853801



REC834975

4 CONDENSADOR / CONDENSER / CONDENSATORE / CONDENSATEUR

REF	OEM
REC8M6001249	835704



KIT

REF
REC392-6324Q1



REC3853801 + REC8M6001219 + REC8M6001249

REF
REC392-6325Q1



REC834975 + REC8M6001219 + REC8M6001249

	1	2	3	4
V6 PRETOLITE AQ175A AQ205A AQ430A, B AQ431A, B	REC392-9086T	REC8M6001219	**REC3853801**	REC8M6001249
V8 PRESTOLITE (Atornillado | screw-down | Avvitato | vissée) AQ211A AQ231A, B AQ271A, B AQ311A AQ500A, B AQ501A, B	REC392-9766	REC8M6001219	**REC3853801**	REC8M6001249
V8 PRESTOLITE (Clip) 190A, 200D, 225D, 240A, 255B, 260A, 280A, 290A	REC835702	REC8M6001219	**REC834975**	REC8M6001249

MALLORY
AQ210A, 200B, 225A,B,C,255A,B

TAPA | **CAP** | **CALOTTA** | **TÊTE D'ALLUMEUR**

REF	OEM
REC12532	841244



PLATINO | **POINT** | **PUNTINE** | **VIS PLATINÉES**

REF	OEM
REC391-5090	835304



ROTOR | **ROTOR** | **ROTORE** | **DOIGT D'ALLUMEUR**

REF	OEM
REC841243	841243



CONDENSADOR | **CONDENSER** | **CONDENSATORE** | **CONDENSATEUR**

REF	OEM
REC8M6001217	835308



MALLORY

TAPA | **CAP** | **CALOTTA** | **TÊTE D'ALLUMEUR**

REF	OEM
REC982209	508932



PLATINO | **POINT** | **PUNTINE** | **VIS PLATINÉES**

REF	OEM
REC391-5090	835304



ROTOR | **ROTOR** | **ROTORE** | **DOIGT D'ALLUMEUR**

REF	OEM
REC89825302	508935



CONDENSADOR | **CONDENSER** | **CONDENSATORE** | **CONDENSATEUR**

REF	OEM
REC8M6001217	835308



KIT

REF
REC391-5090Q1



REC89825302 + REC391-5090 + REC8M6001217

4-CYL DELCO EST
GM 3.0L / 181CI / 4-CYL

TAPA | **CAP** | **CALOTTA** | **TÊTE D'ALLUMEUR**

REF	OEM
REC3854260	3854260



ROTOR | **ROTOR** | **ROTORE** | **DOIGT D'ALLUMEUR**

REF	OEM
REC3854261	3854261



CABLES | **WIRE** | **CAVI** | **FAISCEAU**

REF	OEM
REC15-405	



V6 DELCO EST
GM 4.3L / 262CI / V6

TAPA | **CAP** | **CALOTTA** | **TÊTE D'ALLUMEUR**

REF	OEM
REC3854331	3854331



ROTOR | **ROTOR** | **ROTORE** | **DOIGT D'ALLUMEUR**

REF	OEM
REC3854311	3854311



CABLES | **WIRE** | **CAVI** | **FAISCEAU**

REF	OEM
REC15-601	



V6 GXI

TAPA

REF	OEM
REC898253T23	3859019

CAP | CALOTTA | TÊTE D'ALLUMEUR



ROTOR

REF	OEM
REC898253013	898253013 3858977

ROTOR | ROTORE | DOIGT D'ALLUMEUR



CABLES

REF	OEM
REC15-606	

WIRE | CAVI | FAISCEAU



V8 DELCO EST
VOLVO GM V8

TAPA

REF	OEM
REC3854548	3854548

CAP | CALOTTA | TÊTE D'ALLUMEUR



ROTOR

REF	OEM
REC3854549	3862014

ROTOR | ROTORE | DOIGT D'ALLUMEUR



CABLES

REF	OEM
REC15-804	

WIRE | CAVI | FAISCEAU



V8 GXI

TAPA | **CAP** | **CALOTTA** | **TÊTE D'ALLUMEUR**

REF	OEM
REC898253T22	3858975



ROTOR | **ROTOR** | **ROTORE** | **DOIGT D'ALLUMEUR**

REF	OEM
REC898253013	898253013 3858977



CABLES | **WIRE** | **CAVI** | **FAISCEAU**

REF	OEM
REC15-815	



V8 FORD
FORD 5.0L / 302CI EFI & 5.8L / 351CI EFI (1993-96)

TAPA | **CAP** | **CALOTTA** | **TÊTE D'ALLUMEUR**

REF	OEM
REC3854217	3854217



ROTOR | **ROTOR** | **ROTORE** | **DOIGT D'ALLUMEUR**

REF	OEM
REC3854218	3854218



DISTRIBUIDORES | **DISTRIBUTORS** | **SPINTEROGENI** | **ALLUMEURS**

REF	OEM		
REC807964A1		V6 (modelo antiguo HEI | late model HEI | modello vecchio HEI | modèle ancien HEI) 4.3 GL, GXI-A	REC15-601



REF	OEM		
REC805222A1	3857449	V8 (modelo antiguo HEI | late model HEI | modello vecchio HEI | modèle ancien HEI) 5.0, 5.7 GL, GS, GXI-A 7.4GII, GS	REC15-804



REF	OEM		
REC817377		3.0 GL, GS Delco	REC15-405

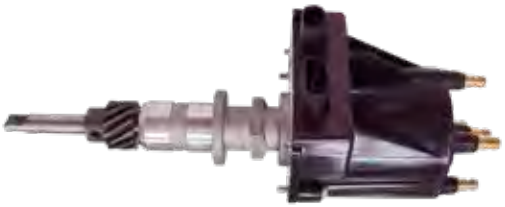

REF	OEM		
REC40005334	40005334	V6 GXI	REC15-606

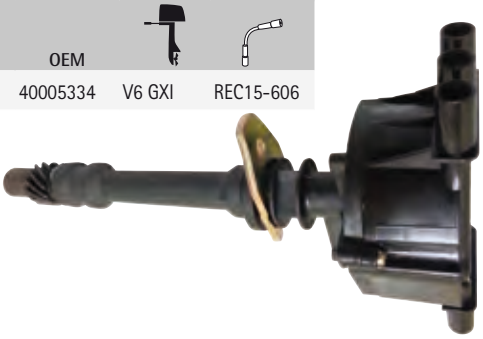

REF	OEM		
REC21622232	21622232	V8 GXI, GI	REC15-815

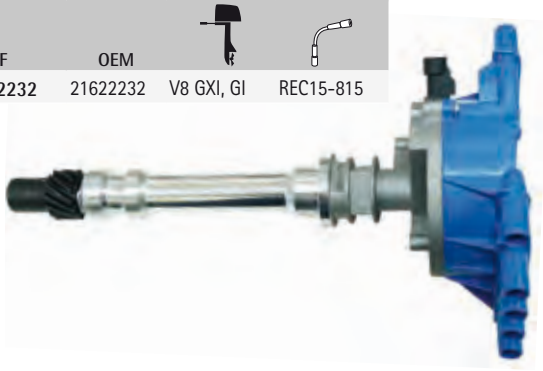

KITS DE CONVERSIÓN ELECTRÓNICO

Sustituyen condensadores y contactos por componentes electrónicos.
Usa bobina, tapa y rotor estandard.
De fácil instalación, una pieza y dos cables.
Precisión entre 1/4'' calibrado de 0 a 8000 rpm.

ELECTRONIC CONVERSION KITS

To subsitute condensers for electronic devices
Uses standard.coil, cap & rotor
Easy installation; one piece, two cables.
Precisely calibrated between 1/4'' from 0 to 8000

KIT DI CONVERSIONE ELETTRICO

Sustituisce condensatori e contatti per componenti eletronici.
Uilizza bobina, calotta e rotore standard.
Facile installazione, una pz e due cavi.
Precisione 1/4" calibrato da 0 a 8000.

KITS DE CONVERSION ÉLECTRONIQUE

Remplace les condensateurs et les vis platinées par des composants éléctroniques. Utilise une bobine, un t^^ete et un rotor standard. Installation facile, une seule pièce et deux fils. Précision de 1/4" calibrée de 0 à 8000 rpm.

REF	
REC26900	GM 4 cil.



REF	
REC26904	8 cyl. MALLORY YL / YD



REF	
REC18-5295	PRESTOLITE V4 cyl.



REF	OEM	
REC3854077	3854077	V8 GM



REF	
REC26905	PRESTOLITE V8 (tornillo en tapa | screw on cap | vite nella calotta | tête vissée)



REF	
REC26901	6 cyl. DELCO



REF	
REC26905	PRESTOLITE V8 (clip en tapa | clip on cap | clip nella calotta | tête clipsée)



DELCO®
(4, 6, 8 CYL GM)

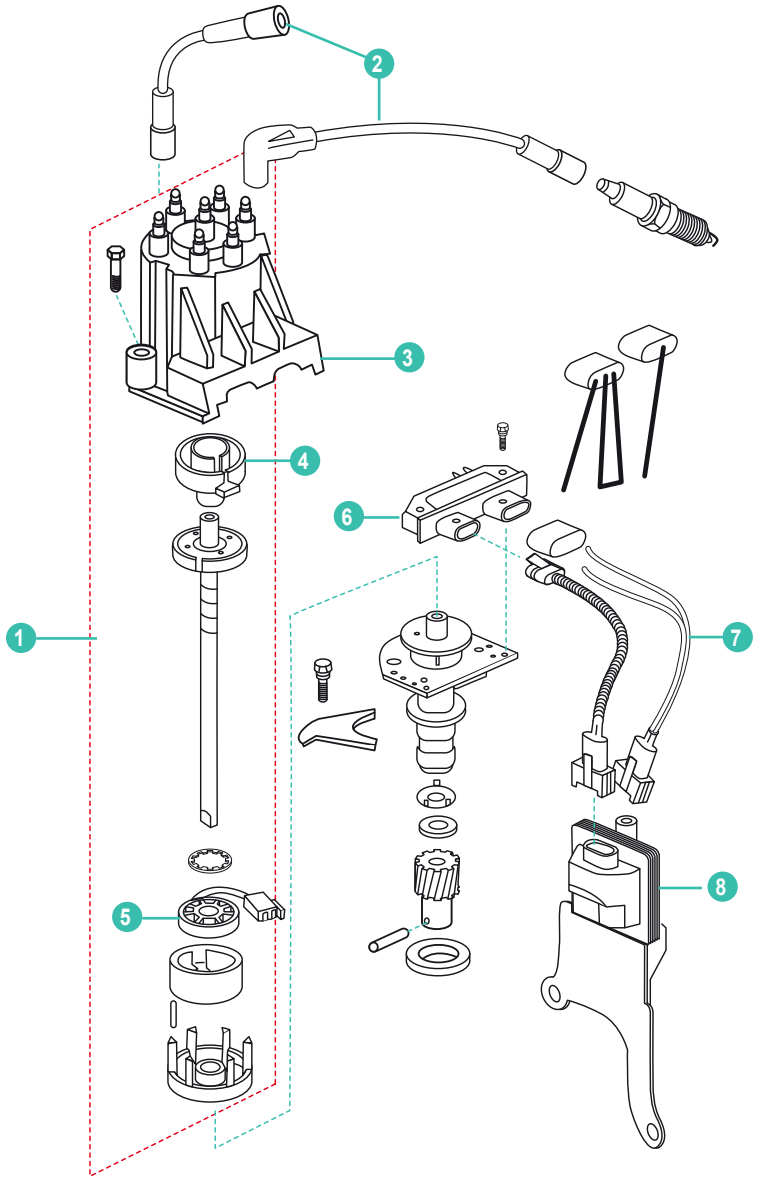

	REF	OEM				
	REC817377	817377	DISTRIBUIDOR 4 CYL	DISTRIBUTOR 4 CYL	DISTRIBUTORE 4 CYL	DISTRIBUTEUR 4 CYL.
1	REC807964A1	807964A1	DISTRIBUIDOR 6 CYL	DISTRIBUTOR 6 CYL	DISTRIBUTORE 6 CYL	DISTRIBUTEUR 6 CYL.
	REC805222A1	805222A1	DISTRIBUIDOR 8 CYL	DISTRIBUTOR 8 CYL	DISTRIBUTORE 8 CYL	DISTRIBUTEUR 8 CYL.
	REC15-405	3888324	KIT CABLE ARRANQUE: 3.0L	IGNITION WIRE SET: 3.0L	KIT CAVI INIEZIONE: 3.0L	KIT FAISCEAU DE BOUGIE 3.0L
2	REC15-601	3888325	KIT CABLE ARRANQUE: V6	IGNITION WIRE SET: V6	KIT CAVI INIEZIONE: V6	KIT FAISCEAU DE BOUGIE V6
	REC15-804	3888326	KIT CABLE ARRANQUE: V8	IGNITION WIRE SET: V8	KIT CAVI INIEZIONE: V8	KIT FAISCEAU DE BOUGIE V8
	REC3854260	3854260	TAPA 4 CYL	CAP 4 CYL	COPERCHIO 4 CYL	TETE D'ALLUMEUR 4 CYL.
3	REC3854331	3854331	TAPA 6 CYL	CAP 6 CYL	COPERCHIO 6 CYL	TETE D'ALLUMEUR 6 CYL.
	REC3854548	3854548	TAPA 8 CYL	CAP 8 CYL	COPERCHIO 8 CYL	RETE D'ALLUMEUR 8 CYL.
	REC3854311	3854311	ROTOR V6	ROTOR V6	ROTORE V6	DOIGT D'ALLUMAGE V6
4	REC3854549	3854549	ROTOR V8	ROTOR: V8	ROTORE: V8	DOIGT D'ALLUMAGE V8
	REC3854261	3854261	ROTOR 4 CYL	ROTOR 4 CYL	ROTORE 4 CYL	DOIGT D'ALLUMAGE 4 CYL
5	REC3854001	3854001	MÓDULO IMPULSOS	MODULE	MODULO	MODULE
6	REC3854003	3854003	MÓDULO DISTRIBUIDOR	MODULE: DISTRIBUTOR	MODULO DISTRIBUZIONE	MODULE DISTRIBUTEUR
7	REC500442		CABLE: DISTRIBUIDOR - BOBINA	WIRE LEAD: DIST- COIL	CAVO: DISTRIBUZIONE - BOBINA	FAISCEAU: DISTRIBUTEUR - BOBINE
8	REC500442	3854002	CABLE: BOBINA	WIRE LEAD: COIL HARNESS	CAVO BOBINA	FAISCEAU POUR BOBINE
9	REC84-817376T01	3854084	CABLES: BOBINA A DISTRIBUIDOR	CABLES: BOBINA A DISTRIBUIDOR	KIT CAVI BOBINA+FILTRO	FAISCEAU POUR BOBINE / DISTRIBUTEUR
10	REC294005		CABLE INTERRUPTOR	IGNITION WIRE: SHIFT INTERUPTER	CAVO INTERRUTTORE	FAISCEAU POUR SHIFT INTERRUPTEUR
11	REC91-888863	885163	HERRAMIENTA: DISTRIBUCIÓ, DELCO HEI/EST	TOOL:TIMING, DELCO HEI/EST	ATREZZI :TIMING, DELCO HEI/EST	OUTIL: ALLUMAGE DELCO HEI/EST

MPI V6 & V8 (GM)

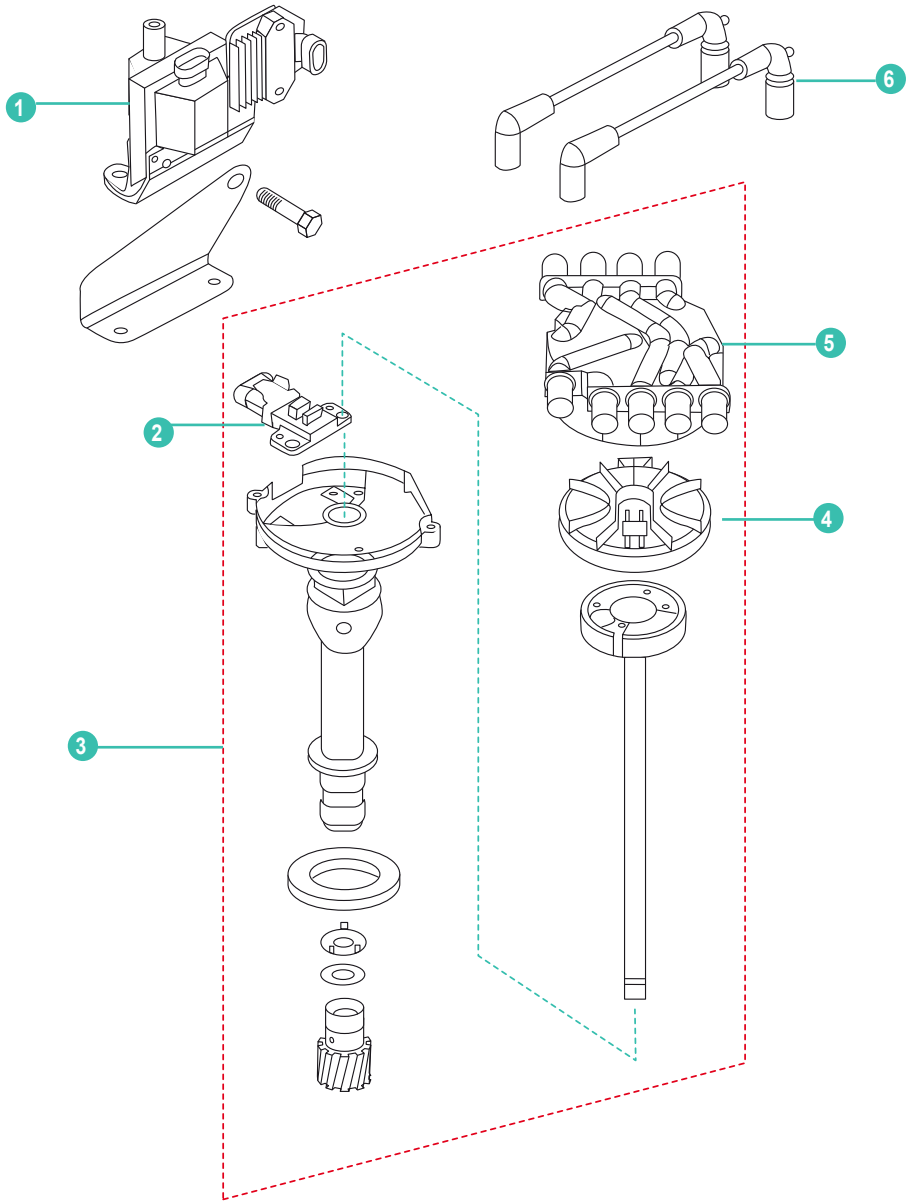

	REF	OEM				
1	REC3861985	3861985	BOBINA ENCENDIDO	IGNITION COIL	BOBINA INIEZIONE	BOBINE D'ALLUMAGE
2	REC3863130	3863130	SENSOR POSICIÓN ÁRBOL DE LEVAS	POSITION SENDER CRANKSHAFT	SENSORE POSIZIONE ALBERO A CAMME	SONDE DE POSITION D'ARBRE À CAMES
3	REC40005334	40005334	DISTRIBUIDOR V6	DISTRIBUTOR V6	DISTRIBUTORE V6	DISTRIBUTEUR V6
	REC21622232	21622232	DISTRIBUIDOR V8	DISTRIBUTOR V8	DISTRIBUTORE V8	DISTRIBUTEUR V8
4	REC898253013	3858977	ROTOR	ROTOR	ROTORE	DOIGT D'ALLUMAGE
5	REC898253T23	3859019	TAPA V6	CAP V6	COPERCHIO V6	TETE D'ALLUMEUR V6
	REC898253T22	3858975	TAPA V8	CAP V8	COPERCHIO V8	TETE D'ALLUMEUR V8
6	REC15-606	3888327	KIT CABLES V6	WIRES KIT V6	KIT CAVI V6	FAISCEAU DE BOUGIE V6
	REC15-815	3888328	KIT CABLES V8 (5.0L, 5.7L)	WIRES KIT V8 (5.0L, 5.7L)	KIT CAVI V8 (5.0L, 5.7L)	FAISCEAU DE BOUGIE V8 (5.0L, 5.7L)

SISTEMA DE REFRIGERACIÓN
COOLING SYSTEM
SISTEMA DI RAFFREDDAMENTO
SYSTÈME DE REFROIDISSEMENT

TERMOSTATO — THERMOSTAT — TERMOSTATO — THERMOSTAT

SISTEMA DE TERMOSTATO D31/D41/D42/D43/D44/D300 | **THERMOSTAT SYSTEM D31/D41/D42/D43/D44/D300** | **SISTEMA DE TERMOSTATO D31/D41/D42/D43/D44/D300** | **SYSTÈME DE THERMOSTAT D31/D41/D42/D43/D44/D300**

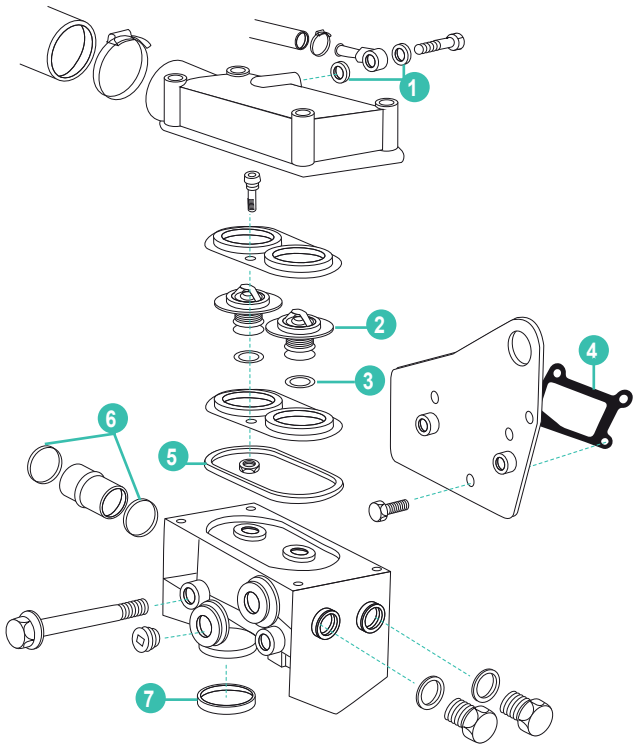

	REF	OEM				
1	REC11994	110386 11994 18839 233033 243621 3580629 6603088 6604939 859851 859853 861835	ARANDELA	WASHER	RONDELLA	RONDELLE
2	REC3831424	3831424 875849 876128 889425	TERMOSTATO	THERMOSTAT	TERMOSTATO	THERMOSTAT
3	REC416033	1317466 416033 418361	JUNTA	GASKET	GUARNIZIONE	JOINT DE THERMOSTAT
4	REC1542187	1542187	JUNTA	GASKET	GUARNIZIONE	JOINT
5	REC838807	838807	ARO TÓRICO	O'RING	O'RING	JOINT TORIQUE
6	REC968927	968927	ARO TÓRICO	O'RING	O'RING	JOINT TORIQUE
7	REC3583913	1542198 3583913	ARO TÓRICO	O'RING	O'RING	JOINT TORIQUE

CUERPOS TERMOSTATO | THERMOSTATO HOUSING | CORPO TERMOSTATO | CORPS DE THERMOSTAT

REF	OEM	
REC3850360	3850360	V6 & V8 (1993-11)



KITS TERMOSTATO | THERMOSTATO KIT | KIT TERMOSTATO | KITS THERMOSTAT

REF	OEM		°C
REC876080	876080 876797 875781 875790 824912 82812	AQ60, 90 ,95, 110, 105, 115, 120A, 130 MB18 MB20A, B, C	60 °C



REF	OEM		°C
REC875791	875791 831040	AQ165A AQ170A, B, C BB165, 170	55°C



REF	OEM		°C
REC875580	875580	AQ120B AQ125A, B AQ131A, B, C, D AQ140A AQ145A, B AQ151A, B, C AQ171A, C 230A 250A 251A, B BB140	82 °C



REF	OEM	°C
REC3853799	3853799	71 °C



REF	OEM		°C
REC876305	876305 875794 424299 835177	V6 & V8 (antiguos | all old style | vecchi | anciennes)	62 °C



REF	OEM	°C	Ø THERMO.
REC3853983	3853983	7.4 GL,Gi,GSi, 8.2 GL,GSi	60 °C	38 mm



REF	OEM		°C
REC3587597	3587597	4.3GL-B, C, E 4.3GXi-F, Si-F 5.0GL-F, C, D 5.0GXi-F, OSi-F 5.7GL-C, D 5.7Gi-F, OSi-E, GXi-G, OSXi-E 5.7GiL-F, G V6-200, 225 V8-225, 270, 300, 320, 380	66 °C



REF	OEM		°C
REC3856961	3856961	4.3 GL, GS, Gi, GXi-B, GXi-BF 5.0 FL, Fi, Gi, GL 5.7 GL, Gi, GS, GSi, GSX 5.8 FL, Fi, FSi 8.1 GI, GSI, GXI, OSI	70 °C



REF	OEM		°C
REC3831426	3831426 875788 824200	V8, D40 5.0GXi-EF, 0OSi-EF 8.1GXi A, B, C 8.1GXi AF, BF, CF 8.1GXiL-A, B, C 8.1GiA, B, C, D 8.1Gi-BF, CF, DF 8.1GiL-A, B, C, D	70 °C



REF	OEM		°C
REC875796	875796	MB10A	60 °C



KITS TERMOSTATO — THERMOSTATO KIT — KIT TERMOSTATO — KITS THERMOSTAT

DIESEL

REF	OEM		°C
REC876080	876080 876097	MD2A, B MD3B MD11C, D MD17C, D	60 °C



REF	OEM		°C
REC875796	875796	MD6A, B MD7A, B	60 °C



REF	OEM		°C	CIRUCUITO CERRADO FRESH WATER CIRCUIT CIRCUITO APERTO CIRCUIT FERMÉ
REC877355	877355	2001AG, B, BG 2002AG, B, BG, D	62 °C	✗
RM875795	875795	2003AG, B, BG, D, T, TB	74 °C	✓



REF	OEM		°C
REC875783	875783	MD5A, B, C	60 °C



REF	OEM		°C
RM861911	861911	2010A, B, C, D 2020A, B, C, D	75°C



REF	OEM		°C
RM3580365	3580365	D2-55A, B MD2030A, B, C, D MD2040A, B, C, D	82°C



REF	OEM		°C	CIRUCUITO CERRADO FRESH WATER CIRCUIT CIRCUITO APERTO CIRCUIT FERMÉ
REC877349	877349	MD11C, D MD17C, D	74 °C	✓



REF	OEM		°C
RM6210419	6210419	MD22A, L-A, L-B, P-B TMD22A, B, P-C TAMD22P-B	



REF	OEM		°C
REC3831426	3831426	MD31A (versión antigua | old style | versione vecchia | version ancienne) MD40A MD41A (versión antigua | old style | versione vecchia | version ancienne) (Se necesita1 pieza | 1 piece needed | Ne serve 1 pz | 1 pièce est necesaire)	70°C



REF	OEM		°C
REC3831424	3831424	MD31 / MD41 (Versión moderna | New style | versione moderna | version moderne) KAD32, 42, 43, 44, 300	81°C



REF	OEM		°C
REC3831425	3831425	MD30A (Se necesitan 2 piezas | 2 pieces needed | Ne serve 2 pz | 2 pièces sont necesaires) MD40A (Se necesita1 pieza | 1 piece needed | Ne serve 1 pz | 1 pièce est necesaire)	76°C



REF	OEM		°C
REC3839110	3839110	TAMD61, 62, 63, 71, 72, 73, 74-P 162C, 163A-A, 163P-A	75°C



REF	OEM		°C
RM3842015	3842015	D1-13A, B, F D1-20A, B, F D1-30A, B, F D2-40A, B, F	90°C



RECAMBIOS MARINOS

REF	OEM		°C
RM888624	888624	D1-20A, B, F D2-50F D2-55C, D, F D2-75A, B, C, F D2-60F	83°C



REF	OEM		°C
RM21412646	21412646	D9A2	86°C



REF	OEM		°C
REC3840816	3840816	D3 110 --> D3 220HP	79°C



REF	OEM		°C
REC21412639	21412639	D9A2, A-MG D12C-A, D-A, D-B, D-G, D-H (MP) D13B-A, B-B, B-C, B-D, B-E, B-G, G-H (MP)	82°C



REF	OEM		°C
REC8149182	8149182	D4, 6, TAMD63L-A, P-A TAMD122A, P-A, P-C TMD122A, P-B	82°C



REF	OEM		°C
REC876080		AQD2B MD2B, 3B MD11C, D MD17C, D	60°C



REF	OEM		°C
RM3588437	3588437	D4, 6 INTERCOOLER	82°C



REF	OEM		°C
REC20450736	20450736	D5A-A TA, A-B TA D7A-B TA, C-B TA, C-A TA TD420VE TAD420VE, 620VE, 650VE, 660VE, 750VE, 760VE	82°C



REF	OEM		°C
REC875785	875785	MD19, 27, 29A, 32A MD21A, B AQD19, 27, 29A, 32A AQD21A, B	71 °C



RETÉN SOPORTE DOBLE TERMOSTATO / DOUBLE THERMOSTAT SUPPORT GASKET / PARAOLIO SUPPORTO, TERMOSTATO DOPPIO / JOINTS DU SUPPORT DOUBLE DE THERMOSTAT

new

REF	OEM	
REC838807	838807	D31/D41/D42 /D43/D44 D13/D300



JUNTAS TERMOSTATO — THERMOSTAT GASKET — GUARNIZIONE TERMOSTATO — JOINTS DE THERMOSTAT

REF	OEM	
REC27-33918	835417 3852111	



REF	OEM	
REC27-8146801	3852096	3.0L



REF	OEM
REC835581	835581



REF	OEM
REC0307239	3852071



REF	OEM
REC856004	856004



REF	OEM	
REC3583780	3583780	MD2040A, B, C, D D2-55, B, C, D, E, F



REF	OEM
REC1542187	1542187

30, 31, 32, 40, 41, 42, 43, 44, 300



REF	OEM	
REC3580514	3580514	MD2040A, B, C, D D2-50F D2-55, B, C, D, E, F



new

REF	OEM
REC416033	416033 7416033



INTERCAMBIADOR DE CALOR — HEAT EXCHANGER — SCAMBIATORE DI CALORE — ÉCHANGEUR DE CHALEUR

KITS INTERCAMBIADOR — HEAT EXCHANGER KITS — KIT SCAMBIATORI — KITS JOINTS D'ÉCHANGEUR

REF	
REC23011	D2-55A, B

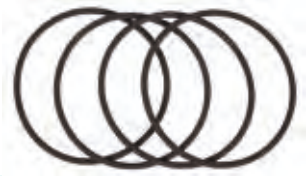

REF	
REC23013	D3-110I-A, I-B, I-C D3-130A-A, A-B, A-C, I-A, I-B, I-C D3-160A-A, A-B, A-C, I-A, I-B, I-C D3-190A-B, A-C, I-B, I-C

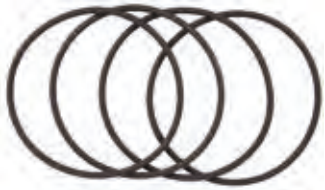

REF	
REC23012	D2-55C, D, F D2-75A, B, C, F



REF	
REC23048	D4-180I-F, I-B, I-C, I-D, I-E D4-210A-A, I-A, I-B D4-225A-F, I-F, A-B, I-B, A-C, A-D, I-C, I-D, A-E, I-E D4-260A-F, D-F, I-F, A-A, A-B, A-C, A-D, D-B, D-C, D-D, I-A, I-B, I-C, I-D, D-E, I-E, A-E D4-300A-F, D-F, I-F, A-A, A-C, A-D, D-A, D-C, I-A, I-C, I-D, A-E, D-E, D-D, I-E D6-280A-A, A-B, A-C, A-D, A-E, I-A, I-B, I-C, I-D, I-E D6-310I-A, A-A, A-B, A-C, A-D, D-B, D-C, D-D, I-B, I-C, I-D, A-E, D-E, I-E D6-330A-B, A-C, A-D, D-B, D-C, D-D, I-B, I-C, I-D, A-E, D-E, I-E D6-350A-A, A-B D6-370A-B, A-C, A-D, D-B, D-C, D-D, I-A, I-B, I-C, I-D, A-E, D-E, I-E D6-400A-E D6-435D-A, D-D, D-C, D-E, I-A, I-C, I-D, I-E



REF

REC23015 D1-13A, B, F
D1-20A, B, F
D1-30A, B, F



REF

REC22155 D22
MD22A, L-A



REF

REC22077 D22
MD22L-B, P-B



REF

REC22156 D22
TMD22A



REF

REC22148 D22
TMD22B
TAMD22P-B

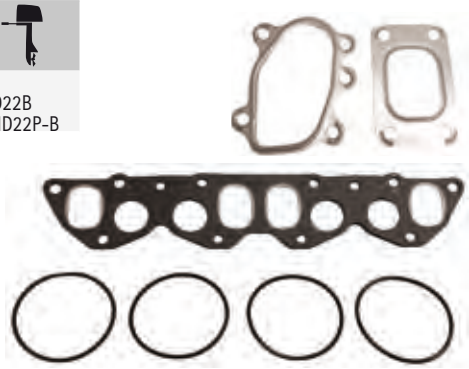

REF

REC22032 Para circuito de agua dulce
Fresh water cooling system
Per circuito acqua dolce
Pour circuit d'eau douce
2002, 2003 AG, B, BG



REF

REC22033 Para circuito de agua dulce
Fresh water cooling system
Per circuito acqua dolce
Pour circuit d'eau douce
2003T, TB



REF

REC22122 MD21A



REF

REC22123 AQD21A
MD21B



REF

REC22124 AQD29, A
AQD32A
MD29, A
MD32A



REF	
REC22105	MD30 TMD30A TAMD30A AD30A AQAD30A

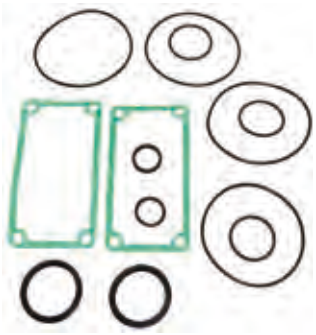

REF	
REC22106	MD40A TMD40A AQD40A



REF	
REC22107	AQD40B TMD40B, C AQAD40A, B TAMD40A, B



REF	
REC22108	TMD31A, 31B, 41B TAMD31A, 31B, 41B AD31A, 31B, 41B D41B, A



REF	
REC22109	TMD31L-A, 41L-A TAMD31P-A, L-A, M-A TAMD41P-A, L-A, M-A, H-A AD31P-A, L-A AD41P-A, L-A D41L-A KAD32P, P-A KAD43P, P-A KAD44P, P-A, P-B, P-C KAD300A KAMD300A



JUNTAS INTERCAMBIADOR — HEAT EXCHANGER GASKETS — GUARNZIONE SCAMBIATORI — JOINTS D'ÉCHANGEUR

new

REF	OEM		
REC976051	976051	D4/D6	49.2 x 5.7 mm

tubo de agua
water tube
tubi acqua
tube d'eau



new

REF	OEM	
REC3583647	3583647	D4/D6

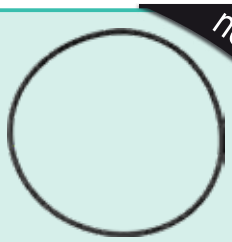

new

REF	OEM	
REC859061	859061 842669	AQD40A MD40A TMD40A

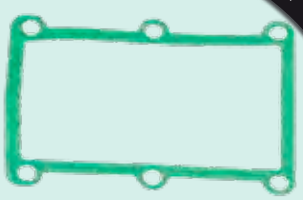

new

REF	OEM	
REC855405	855405	230/250/251 AQ131/AQ151/AQ171



new

REF	OEM		
REC964106	964106	D31, D41, D32, D42, D43, D44, D300, D13, D4, D6, D8, D122	14.4 x 8.7 x 1.5 mm



new

REF	OEM	
REC859045	859045 845291	D30/D40

tapa superior
upper cover
copperchio superiore
couvercle supérieur

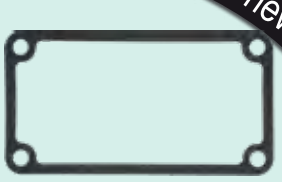

INTERCOOLER | INTERCOOLER | INTERCOOLER | INTERCOOLER

new

REF	OEM	
REC859047	859047 845585	D40

Tapa lateral
Side cover
Coperchio laterale
Couvercle lateral



REF	
REC22103	AQ120B, 125, 140, 145 BB140A, 145A



REF	
REC22015	AQ131,151,171 230, 250, 251

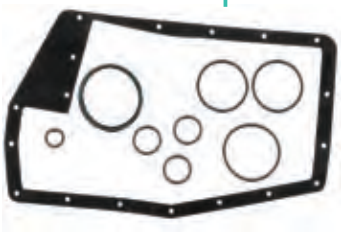

INTERCAMBIADOR DE AGUA | WATER EXCHANGER | SCAMBIATORE ACQUA | ÉCHANGEUR D'EAU



REF
REC22037

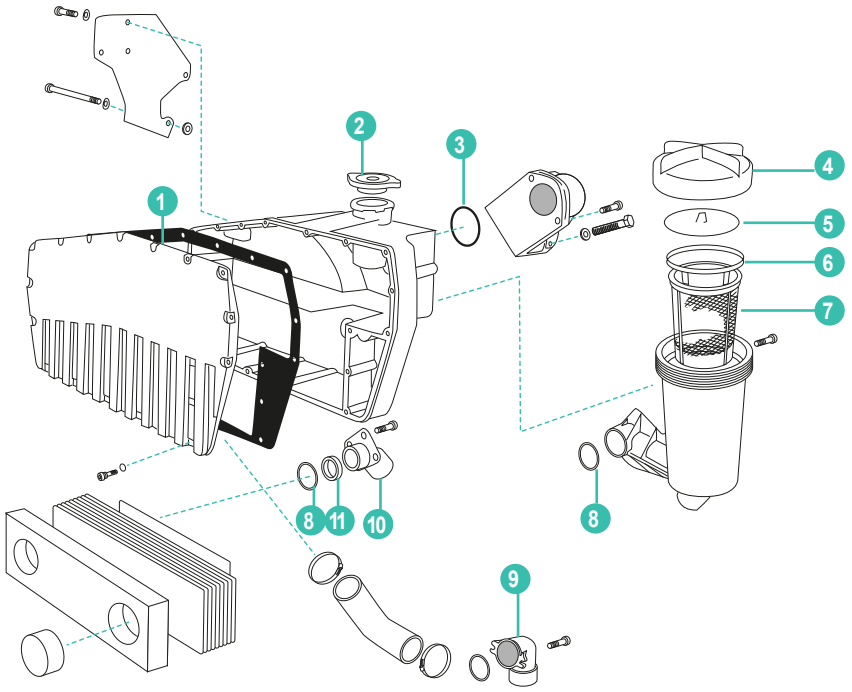

	REF	OEM					
1	REC855405	855405	JUNTA	GASKET	GUARNIZIONI	JOINT	
2	RM829205	818666 829205	TAPON	CAP	TAPPO	BOUCHON	
3	REC975672	925091 975672	ARO TORICO	RUBBER O-RING	FASCIA TONDA	JOINT TORIQUE	
4	RM855410	855410	TAPA	COVER	COPERCHIO	COUVERCLE	
5	RM855433	855433	TAPA PRESION	PRESSURE PLATE	COPERCHIO PRESSIONE	PLATEAU DE PRESSION DU FILTRE A EAU	230A, B 250A, B 251A AQ131 AQ151 AQ171
6	RM855423	855423	JUNTA	GASKET	GUARNIZIONI	JOINT DE COUVERCLE DU FLTRE A EAU	
7	RM855409	855409	FILTRO	STRAINER	FILTRO	FILTRE	
8	REC948610	925067 948255 948610	ARO TORICO	O-RING	FASCIA TONDA	JOINT TORIQUE	
9	RM855791	831931 855791	CONECTOR CAJA	CONNECTOR	CONNETTORE	RACCORD	
10	RM856083	855407 856083	CONECTOR	CONNECTING PIPE	CONNETTORE	PIPE DE CONNEXION	
11	REC855582	825582	ANILLO RETEN	O-RING	FASCIA TONDA	JOINT TORIQUE	

FILTRO AGUA SALADA — SEA WATER FILTER — FILTRO ACQUA SALATA — FILTRE EAU DE MER

REF	OEM		
REC3583840	3583840 21219693	2001, 2002, 2003, 2010, 2020, 2030, 2040 MD AQD21, 30, 31, 41, D1, 2	Ø32 mm



REF	OEM	
REC21655254	21655254 21610728 3594159 3809093 3594161 3809097 3587046	Ø 50 mm
REC21880386	21880386 21641712 860631	



REC21880386 REC21655254

REF	OEM	
REC21457172	21457172 3889148 3809070 3582986 3809071 3583338	D4 & D6 (con cola | with sterndrive | con piede | avec embase)



ENFRIADOR DE AIRE — AFTERCOOLER — REFRIGERATORE ARIA — REFROIDISSEUR D'AIR

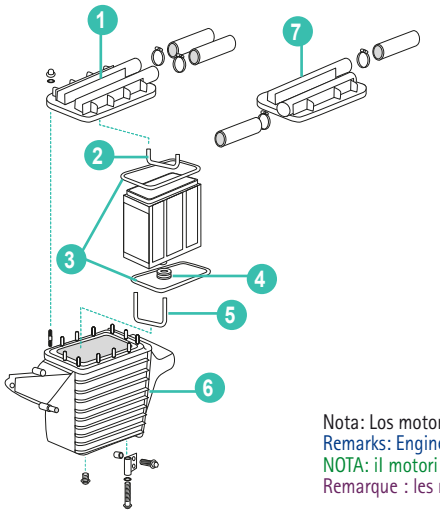

Nota: Los motores 44 y 300 utilizan la misma carcasa pero diferente elemento y tapa.
Remarks: Engines 44 & 300 uses same housing but different insert and cover.
NOTA: il motori 44 e 300 montano la stessa carcassa, ma differente elemento e coperchio.
Remarque : les moteurs 44 et 300 utilisent le même boîtier mais un élément et un couvercle différents.

	REF	OEM					
1	RM860409	860409	TAPA	COVER	COPERCHIO	COUVERCLE	AQAD31A AD31A, B, XD, D-A, L-A, P-A AD41A, B, D, L-A, P-A AQAD41A KAD300-A KAD42A, B, P-A KAD43P KAD44P KAMD300-A KAMD42A, B, P-2 KAMD44P-A, P-C TAMD31A, B, D, L-A, P-A, M-A, S-A TAMD41A, B, D, H-A, H-B, P-A, L-A, M-A TAMD42B TAMD42WJ-A
2	REC847573	847573	JUNTA	GASKET	GUARNIZIONE	JOINT	
3	REC860920	860920	JUNTA	GASKET	GUARNIZIONE	JOINT	
4	REC858979	858979	JUNTA	GASKET	GUARNIZIONE	JOINT	
5	REC3582639	3582639	JUNTA	GASKET	GUARNIZIONE	JOINT	
6	RM861657	861657	CARCASA	HOUSING	CARCASSA	CARTER	
7	REC861263	861263	TAPA 44/300	COVER 44/300	COPERCHIO 44/300	COUVERCLE 44/300	

JUNTAS ENFRIADOR — AFTERCOOLER GASKETS — GUARNZIONE REFRIGERATORE — JOINTS DE REFFROIDISEUR

REF	
REC22111	AQAD40A, B TAMD40A, B

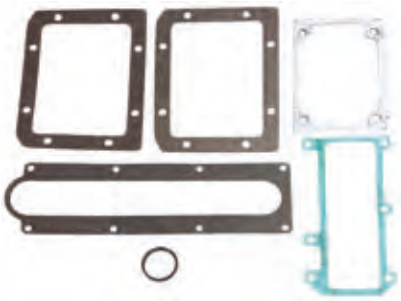

REF	OEM	
REC949721	949721 12279 14012279 13949721 925062	26.2 x 3 mm

new



ADMISIÓN
INTAKE
ASPIRAZIONE
ADMISSION

new



REC859034



REC859196



REC859065

REF	OEM	
REC859196	859196 845353	D40
REC859034	859034 1542289	D30A D40A,B,C
REC859065	859065 842645	D40A, B,C

REF	
REC22154	D22 TAMD22P-B

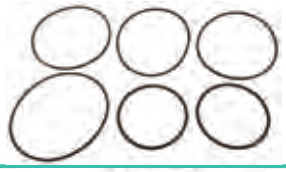

REF	
REC22110	AQAD30A TAMD30A



REF	
REC23014	D4-180I-F, I-B, I-C, I-D, I-E D4-210A-A, I-A, I-B D4-225A-F, I-F, A-B, I-B, A-C, A-D, I-C, I-D, A-E, I-E D4-260A-F, D-F, I-F, A-A, A-B, A-C, A-D, D-B, D-C, D-D, I-A, I-B, I-C, I-D, D-E, I-E, A-E D4-300A-F, D-F, I-F, A-A, A-C, A-D, D-A, D-C, I-A, I-C, I-D, A-E, D-E, D-D, I-E D6-280A-A, A-B, A-C, A-D, A-E, I-A, I-B, I-C, I-D, I-E D6-310I-A, A-A, A-B, A-C, A-D, D-B, D-C, D-D, I-B, I-C, I-D, A-E, D-E, I-E D6-330A-B, A-C, A-D, D-B, D-C, D-D, I-B, I-C, I-D, A-E, D-E, I-E D6-350A-A, A-B D6-370A-B, A-C, A-D, D-B, D-C, D-D, I-A, I-B, I-C, I-D, A-E, D-E, I-E D6-400A-E, D6-435D-A, D-D, D-C, D-E, I-A, I-C, I-D, I-E

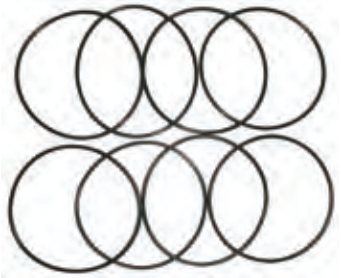

REF	OEM	
REC858570	858570	D31/D41/D32/D42 D43/D44 D13

new



ENFRIADOR DE ACEITE — OIL COOLER — SCAMBIATORE OLIO — REFFROIDISEUR D'HUILE

CARCASA — HOUSING — CARCASSA — CARTER

REF		
SED3094200	ACER INOX AISI316 SS AISI316 ACIACIO INOX AISI316 ACIER INOX. AISI316	30, 31, 40, 41 & 42
RECOILCOOLER	AL	

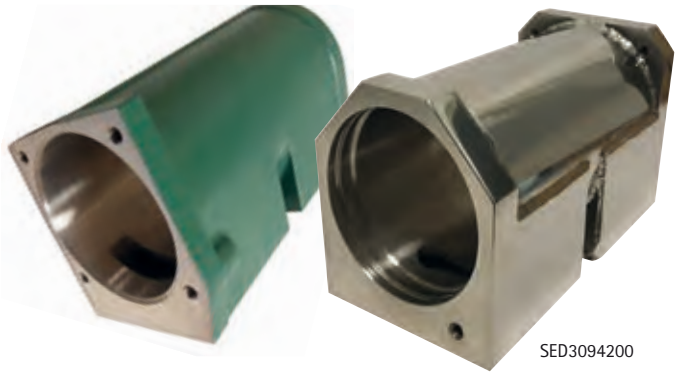

RECOILCOOLER

SED3094200

KIT RETENES ENFRIADOR DE ACEITE — OIL COOLER SEAL KIT — KIT TENUTE REFRIGERATORE OLIO — KIT JOINTS DU REFFROIDISEUR D'HUILE

REF	
REC22070	AQ105, 115, 120, 130, 145, 151, 165A, 170, 171 BB115, 140, 145, 165, 170 MB20A, B, C 230A, B 250A, B 251A



REF	
REC22153	D22 MD22L-B, P-B TAMD22P-B TMD22B

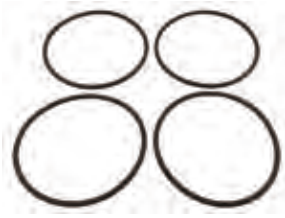

REF	
REC22152	D22, 30, 31, 32, 40, 41, 42, 43



REF	
	Con circuito de agua dulce With fresh water cooling system Con circuito ad acqua dolce Avec circuit d'eau douce
REC22022	2003T, TB



REF	
REC22128	MD29, 29A 32A AQD29A, 32A



REF	
REC22127	MD21A, B AQD21A, B



REF	
	Para tapa de enfriador con 3 tornillos 3 bolt oil cooler cap Per modello con 3 viti couvercle avec 3 vis
REC22143	KAD32P-A, 42P-A, 43P-A, 44P-A, 300A KAMD42P-A, 43P-A, 44P-A, 300A TAMD42WJ-A D31, 32, 41, 42, 43, 44, 300



REF	
	Para tapa de enfriador con 4 tornillos 4 bolt oil cooler cap Per modello con 4 viti couvercle avec 4 vis
REC22104	MD30, 31, 40, 41, 42, 43, 44, 300



REF	
REC22149	D30, 31, 32, 40, 42, 43 D41, A, B, D, L-A AD30A, 40B AD31A, B, D, L-A, P-A, XD AD41AM, L-A, P-A AQAD30A, 31A, 40A, 41A AQD40AM MD30AM, 31, 40A TAMD30A, 40A, 42B, 42WJ-A TAMD31A, L-A TAMD41A, B, D, H-A, L-A, M-A, P-A TMD30A, 31A, 40A TMD41A, B, D, L-A KAD32P-A, 43P-A, 300A KAD42A, B, P-A KAD44P-A, P-B, P-C KAMD42A, B, P-A KAMD43P-A, 300A KAMD44P-A, P-B, P-C KAD44P-A, P-B, P-C



RETENES Y JUNTAS — OIL SEAL & GASKETS — PARAOLIO E O-RING — JOINTS SPI ET TORIQUES

new

REF	OEM		(mm)				
REC976041	976041	D4/D6	42.2 x 3				
REC949974	94997		27.2 x 3				
REC976106	976106 190187						
REC949721	949721 12279 14012279 13949721 925062		26.2 x 3 mm				
REC975309	975309	D4/D6 D162/D163	38.2 x 32.2 x 3				
REC859086	859086 842586	D31/D41/D30/D40/D32/D42/ D43/D44 D13					
REC949722	949722 13949722	D4/D6 D162/D163/D165 D61/D62/D63/71/72 D73/D74/D75	36.2 x 3	ENFRIADOR ACEITE BOMBA ACEITE Y FILTRO	OILCOOLER OIL PUMP & FILTER	SCAMBIATORE OLIO POMPA OLIO E FILTRO	REFFROIDISSEUR D'HUILE POMPE A HUILE ET FILTRE
REC969415	969415	D12/D13/D16/D5/9D7/D8/D9 D4/D6/D162/D103/D2010 D163/D74/D75	49.5 x 3	SISTEMA ACEITE Y REFRIGERACIÓN	OIL SYSTEM & COOLING	SISTEMA OLIO E SCAMBIATORE	SYSTÈME D'HUILE ET REFFROIDISSEUR
REC949658	949658 12276		24.2 x 3	TUBO ENFRIADOR BOMBA AGUA INVERSORA	OILCOOLER TUBE WATER PUMP INVERTER	TUBO SCAMBIATORE POMPA ACQUA INVERSORA	TUYAU REFFROIDISSEUR, POMPE A EAU INVERSEUR
REC859010	859010 845301	MD40		ENFRIADOR ACEITE	OILCOOLER	SCAMBIATORE OLIO	REFFROIDEISSEUR D'HUILE
REC859131	859131 844084	D40A,B		COLECTOR ADMISIÓN	INTAKE MANIFOLD	COLLETTORE ASPIRAZIONE	CARTER ADMISSION


REC976041


REC949974


REC976106


REC949721


REC975309

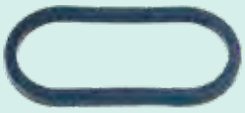
REC859086


REC949722


REC969415


REC949658


REC859010

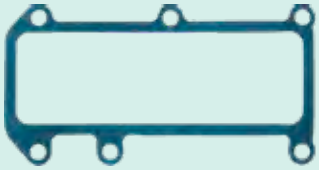
REC859131

BOMBAS DE AGUA DE CIRCULACIÓN — BLOCK CIRCULATING WATER PUMPS — POMPE ACQUA RICIRCOLO DI BLOCCO — POMPE DE BRASSAGE

GAS

BOMBAS DE AGUA — WATER PUMPS — POMPE ACQUA — POMPE A EAU

REF	OEM	
REC271975	271975 1275148 3547560	131A, B, C, D 151A, B, C 171A,C 230A, B 250A, B 251A



REF	OEM	
REC46-8M0113733	3858340 3854017	3.0L



REF	OEM	
REC3587508	3587508 828023	140A 120B 125A 145A



REF	OEM	
REC46-8M0113735	3855991 856609 3854118	7.4L 8.2L



REF	OEM	
REC879194401	21124846	V6 (⊘ bypass) 4.3L-J, GL-JF, GXI225-R, GI200-R, GXIE225-R, GXIE-M, GXIE-P, GXIE-Q, GXI-J, GXI-JF, OSI-V, OSI-JF, GXI-P, GXI-Q (2008+)



REF	OEM	
REC46-8M0113734	3853850	V6 & V8 (bloque pequeño | small block | blocco picolo | petit bloc) ⊘: 4.3L-J, GL-JF, GXI225-R, GI200-R, GXIE225-R, GXIE-M, GXIE-P, GXIE-Q, GXI-J, GXI-JF, OSI-V, OSI-JF, GXI-P, GXI-Q (-2007)



REF	OEM	
REC46-8M0113736	3861341	GM 8.1L



REF	OEM	
REC3853796	3853796	V8 Ford, 302 & 351



JUNTAS BOMBAS DE AGUA — WATER PUMPS GASKETS — GUARNIZIONE POMPE DELL'ACQUA — JOINTS DE POMPE A EAU

REF	OEM		BOMBA PUMP POMPA POMPE
REC27-803192A2	24-803192A2	740, 7.4, 8.2L	REC46-8M0113735



REF	OEM		BOMBA PUMP POMPA POMPE
REC27-56880		Ford V8 (302, 351)	REC3853796



REF	OEM		BOMBA PUMP POMPA POMPE
REC27-33956	3853342	4 & 6 Cyl.	REC46-8M0113733



REF	OEM	
REC22014		AQ120B, 125A, 140A, 145A BB140A, 145A

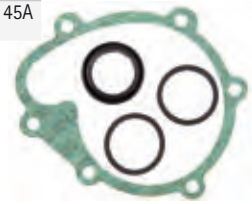

REF	OEM	
REC22038		AQ125B, 145B



REF	OEM		BOMBA PUMP POMPA POMPE
REC30677767	30677767	D3	REC3801404



REF	OEM	
REC3818912	3818912	D4 D6



new

REF	OEM	BOMBA PUMP POMPA POMPE
REC859027	859027 1542229	REC23059414



new

REF	OEM	
REC430017	430017	AQ165 AQ170 BB165 BB170



new

REF	OEM	
REC1378491	1378491 1376344	230,250,251 131,151,171



REF	OEM		BOMBA PUMP POMPA POMPE
REC27-34897	3852477	GM V6 & V8 (bloque pequeño | small block | blocco picolo | petit bloc)	REC46-8M0113734 REC879194401



REF	OEM		BOMBA PUMP POMPA POMPE
REC27-49110	3853361	V-8 (big bloce | big block | blocco grande | big bloc)	REC46-8M0113735



REF	
REC22039	AQ131A, B, C, D AQ151A, B, C AQ171A, C 230A, 250A, 251A

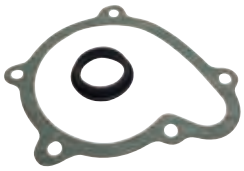

REF	
REC22013	AQ165A BB165A AQ170A, B, C BB170A, B, C



GUÍA BOMBAS DE CIRCULACIÓN — WATER CIRCULATING PUMPS APPLICATION — GUIDA POMPA DI RICIRCOLO — GUIDE POMPES D'EAU

	BOMBA PUMP POMPA POMPE	OEM	JUNTA BOMBA GASKET PUMP GUARN. POMPA JOINT POMPE	OEM	CUERPO TERMOS. THERMOS. HOUSING CORPI TERMOSTAT CORS THERMOSTAT	OEM	JUNTA CUERPO GASKET HOUSING GUARNI. CORPI JOINT DE CORPS	OEM	MANGUITO HOSE MANICOTTO DURITE	OEM
AQ131A, B, C, D AQ115A, B, C AQ171A, C 230A, B 250A, B 251A	REC271975	271975								
B21 B23 AQ120B AQ125A AQ140A BB140A AQ145A BB145A	REC3587508	3587508								
3.0GLMMDA, GSPMDA, GSMHUB, GSPHUB, GSMNCA, GSPNCA, GSMNCS, GSPNCS, GSMLKD, GSPLKG	REC46-8M0113733	3858340	REC27-33956	3853342	BAOMC29-910303	3854254	REC27-8146801	3852096	RM3852289	3852289
3.0GSP-A, -B, -C WTR, WTS, BYCCE, EFS GSM-A, -B, -C, WTR, WTS, BYMCE GLP-A, -B, -C, -D, -E, -J, -N GLM-A, -B, -C	REC46-8M0113733	3858340	REC27-33956	3853342			REC27-8146801	3852096	RM3857391	3857391

	BOMBA PUMP POMPA POMPE	OEM	JUNTA BOMBA GASKET PUMP GUARN. POMPA JOINT POMPE	OEM	CUERPO TERMOS. THERMOS. HOUSING CORPI TERMOSTAT CORS THERMOSTAT	OEM	JUNTA CUERPO GASKET HOUSING GUARNI. CORPI JOINT DE CORPS	OEM	MANGUITO HOSE MANICOTTO DURITE	OEM
4.3GXIE-M, GL-P, GL-J, GL-JF, GXI-J, GXI-JF, GXI-P, GXI-Q, GXIE-P, GXIE-Q, GXI-225-R, GI-200-R, GXIE-225-R, OSI-J, OSI-JF V6-200-A V6-225-A, -E-A	REC879194401	21124846	REC27-34897	3852477			REC27-33918	3852111	REC3862523	3862526
V8 (bloque pequeño | small block | blocco picolo | petit bloc) & V6 ⃠ : 4.3GXIE-M, GL-P, GL-J, GL-JF, GXI-J, GXI-JF, GXI-P, GXI-Q, GXIE-P, GXIE-Q, GXI-225-R, GI-200-R, GXIE-225-R, Osi-J, Osi-JF V6-200-A V6-225-A,-E-A	REC46-8M0113734	3853850	REC27-34897	3852477	REC3850360	3850360	REC27-33918	3852111	RM3852288	3852288
8.1 GIE-P, -J, -K, -M, -JF, -KF, -MF GXIE-P, -J, -K, -M, -JF, -KF, -MF GICE-P, -Q IPSCE-PF, -Q, -JF, -MF IPSE-JF GI-A, -B, -C, -D, -E, -F, -J, J-F, -G, H, -J, -GF, -EF, -FF, -HF GSI-A GXI-A, -B, -C, -D, -E, -F, -G, -J, -JF, -DF, -EF, -FF, -GF GiI-A, -B, -C, -D, -E, -G, -H GSiI-A GXiI-A, -B, -C, -D, -E, -F, -G OSi-A, -B, -C, -D, -J, -AF, -BF, -CF, -DF, -JF OSiE-J, -JF GIC-400-J, -JF, -Q	REC46-8M0113736	3861341					REC27-33918	3852111		
740A, B 7.4GLPMDA, GLPMDM, GLIMDA, GLIMDM, GLPHUS, GIPHUSCE, GSIXHUS, GLIHUB, GIIHUBCE, GLPNCS, GLPNCB, GIINCCCE, GIPNCBCE, GIPNCSCE, GLINCC, GLINCS, GSIINCC, GSIXNCB, GLPNCA, GLPNCM, GIINCSCE, GIPNCACE, GIPNCMCE GLINCS, GSIINCS, GSIXNCMGLPLKD, GLPLKE, GIPLKDCE, GIPLKECE 8.2GLPMDA, GLPMDM, GLIMDA, GLIMDM, GSIXNCB	REC46-8M0113735	3855991					REC27-33918	3852111		
5.0FI, FL 5.8FI, FL (Ford 302 & 351)	REC3853796	3853796	REC27-56880	3852824	REC3850360	3850360	REC27-33918	3852111		

BOMBAS DE AGUA — WATER PUMPS — POMPE ACQUA — POMPE DE BRASSAGE

DIESEL

REF	OEM	
REC23059414	23059414	D31, 41, 42, 43, 44, 300 KAD32P



RECAMBIOS MARINOS

DESPIECE BOMBA DE AGUA | WATER PUMPS PARTS | ESPLOSO POMPE DELL'ACQUA | PIÈCE DE POMPE D'EAU

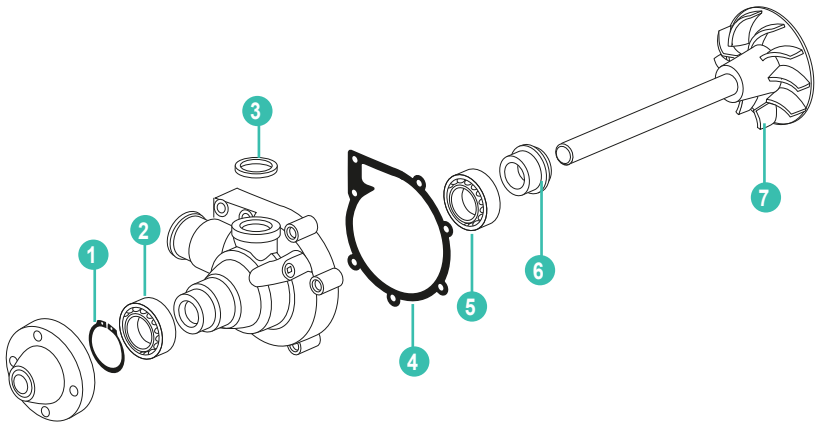

	REF	OEM				
	REC23059414	23059414	BOMBA COMPLETA	PUMP ASSY	POMPA COMPLETA	POMPE COMPLETE
1	REC914462	914462	CIRCLIP	CIRCLIP	CIRCLIP	CIRCLIP
2	REC181538	181538	COJINETE	BEARING	CUSCINETTO	ROULEMENT
3	REC3583913	3583913	RETÉN	SEALOIL	PARAOLIO	JOINT D'ETANCHEITE
4	REC859027	859027	JUNTA	GASKET	GUANIZIONE	JOINT
5	REC1660609	1660609	COJINETE	BEARING	CUSCINETTO	ROULEMENT
6	REC1676432	1676432	ESTOPADA	SEAL KIT	KIT PARAOLI	KIT JOINT
7	REC3583087	3583087	RODETE CON EJE	IMPELLER & SHAFT	GIRANTE POMPA ACQUA	TURBINE DE POMPE A EAU

RODAMIENTO | BEARING | CUSCINETTO | ROULEMENT

new

REF	OEM	
REC1660609	1660609 181670	D31, 40, 41, 30, 21, 70, 32, 300 D13, 42, 43, 44, 100, 120, 102, 103 D121, 122, 162, 163, 165, 60, 61, 62, 63, 71, 72, 73, 74, 75



ANILLO DE DESGASTE ESTOPADA | SEALING RING | GUARNIZIONE | JOINT

new

REF	OEM	
REC421306	421306	D31, D41, D30, D40, D21, D70, D42, D100, D120, D102, D121, D122, D162, D60, D61, D62, D63, D71, D72, D73 AQ: 115, 130, 165, 170 B: 20, 115, 165, 170



ESTOPADA | SEAL KIT | KIT PARAOLIO | KIT JOINTS

new

REF	OEM	
REC1676432	1676432 1545283 421174 1665527 15442883 1674032	D31, 40, 41, 30, 21, 70, 32, 300 D13, 42, 43, 44, 100, 120, 102, 103 D121, 122, 162, 163, 165, 60, 61, 62, 63, 71, 72, 73, 74, 75



KIT REPARACIÓN BOMBAS DE AGUA | WATER PUMPS REPAIR KIT | KIT RIPARAZIONE POMPE ACQUA | KIT POMPE A EAU

REF	OEM	
REC3801404	3801404 3801636 30751022 31293668	D3



JUNTAS BOMBAS DE AGUA | WATER PUMPS GASKETS | GUARNIZIONE POMPE DELL'ACQUA | KITS REPARATION ET KITS JOINTS DE POMPE D'EAU

REF	OEM	
REC876793	876793 876560	D30, 31, 32 TD30A AQAD30A AQAD31A MD30A TAMD30A TMD30A TMD31A, L-A TD31ACE AD31, L-A, P-A TAMD31L-A, M-A, P-A, S-A, A KAD32P



REF	OEM	
REC876794	876794 876544	D40, 41, 41A, 41L-A, 42, 43, 44, 300 TD40A MD40A TMD40A, B, C AQD40A TAMD40A, B AQAD40A, B TMD41A, L-A TAMD41A AD41A, L-A TAMD41H-A, H-B, L-A, M-A, P-A TAMD42WJ-A, B KAD42A, P-A KAMD42A, P-A KAD43P-A KAMD43P-A KAD44P-A, P-B, P-C KAMD44P-A, P-B, P-C KAD300 KAMD300



REF	
REC22125	MD21A AQD21A MD21B AQD21B (Versiones nuevas | Early version | Nuova versione | Nouvelle version)

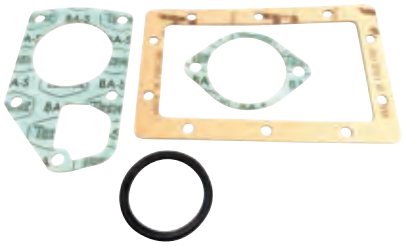

REF	
REC22126	MD21B AQD21B (Versión moderna | Late version with pipe cooler | Versione moderna | version moderne)

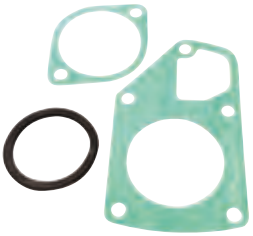

RODETE CON EJE | IMPELLER AND SHAFT | GIRANTE POMPA ACQUA | TURBINE DE POMPE À EAU

REF	OEM		POMPA
REC3583087	3583087	D31, 41, 42, 43, 44, 300, 32	REC23059414



new

GAS

MOTORES GASOLINA | GAS ENGINE | MOTORI BENZINA | MOTEUR ESSENCE

BOMBAS DE AGUA | WATER PUMPS | POMPE ACQUA | POMPE A EAU

REF	OEM				
JOH10-32621-2	855578 828026 855517	AQ120B AQ125A, B AQ131A, B, C, D AQ140A AQ145A, B AQ151A, B, C AQ171A, C AQ251C AQ230A, B AQ250A, B BB140A BB145A	REC875575	REC831009	REC831622



REF	OEM			
JOH10-32058-1	831178	AQ165A AQ170A, B, C MD21A MO 103387-9 MD21B AQD21B, A BB165A BB170A, B, C	REC875575	REC831009

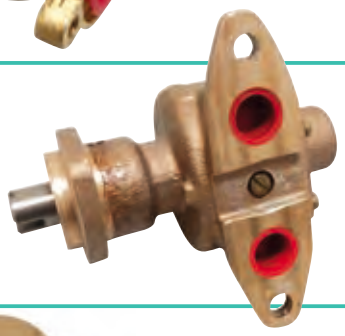

REF	OEM				
RM21212798	21212798 3812522	3.0GLP-D, P-E, P-J, P-N	REC21213664	REC3817687	



REF	OEM			
RM21212801	21212801 21131568	3.0GXIC-J, GXI-J	REC21213664	REC3817687

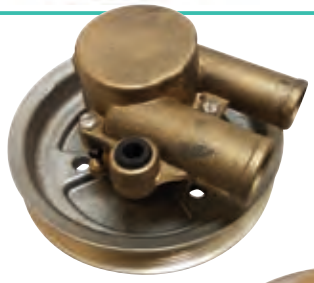

REF	OEM			
RM21214595	21214595 3812696 3862485 3861417	3.0GLP-A, B, C 3.0GLM-A, B, C 3.0GSP-A, B, C 3.0GSM-A, B, C	REC21213660	REC3857954

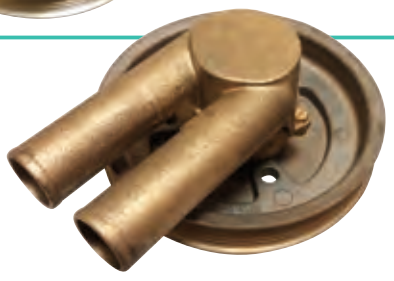

REF	OEM			
REC21214599	21214599 3812693 3862482 3857202	3.0GSMEFS, GSPEFS 4.3GXI-C, GXI-CF, GXI-D, GXI-DF, GXI-SI, GXI-E, GXI-EF, OSI-E, OSI-EF 5.0GXI-C, GXI-CF, GXI-D, SI-C, SI-CF, SI-D, SI-DF, SI-E, GXI-EF, DSI-E 5.7GI, GXI, OSI, SXI, GXIL	REC21213660	REC3857954



REF	OEM		
SHEG9903	3857794 3851982 3855079 3852399	3.0GL, GS 4.3GLP, GS, GI 5.0GL, GI, GS 5.7GL, GI 7.4GL, GI, GS 8.2GSI	JOH09-1027B

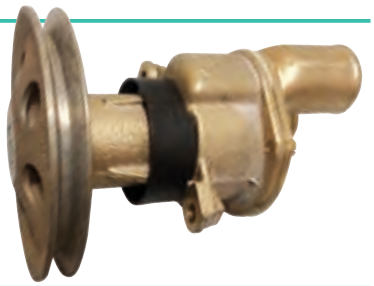

REF	OEM			
SHEG9901	3858847 3851623 3852398 3855778	4.3GLM, GLP, GS, GI 5.0 Ford FI, FL, FS 5.7GI, GL 5.8 Ford FI, FL, FS 7.4GL, GI 8.2GL	JOH09-1027B	165 mm

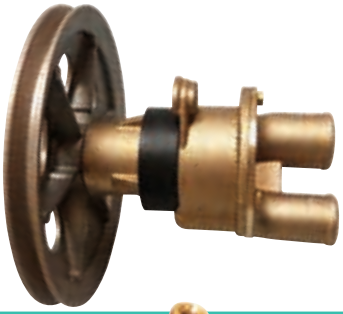

REF	OEM			
REC3860703	3860703 856513	V6 & V8	CEF500104	RM826422



REF	OEM				
RM21214596	21214596 3812697 3862487 3858229	4.3GL-A, GL- B, GL-C, GL-D, GLP 5.0GL-A, GL-B, GL-C, GL-D, GL-E, GLP 5.7GL-A, GL-B, GL-C, GL-D, GL-E	REC21213660	REC3857954



REF	OEM			
RM21255090	21255090 3812520	4.3GL-E, GL-EF 5.0GL-F, GL-FF	REC21213664	REC3812240



REF	OEM			
REC21212799	21212799 3812519	4.3GL-G, GL-GF, GXI-F, OSI-F, GXIE-M, GL-P, GXI-P, GXI-Q, GXI-GF, OSI-GF, GXI-G, OSI-G 5.0GL-M, GL-HI, GXI-F, GXI-FF, OSI-FF, GXI-G, GXI-GF, OSI-G, OSI-GF, GIF-FF, GXI-G, GXI-GLI, OSI-E, OSI-EF, OSI-GF, SXI-G, SXI-GF, GI-F, GXIL-G, GIL-G, GXIL-H	REC21213664	REC3817688 REC3812240

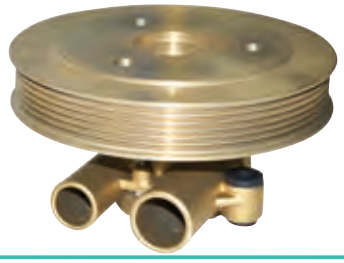

REF	OEM			
REC21214601	21214601 3812695 3862484 3860795	8.1	JOH09-1027B	REC3857954



REF	OEM			
REC21212800	21212800 3812518	8.1 GIE-P, FXIE-P, CICE-P/Q, G, H 8.1 IPS 8.1 OSI-C/CF, D, DF 8.1 GI-G, H		CEF500178G



REF	OEM			
JOH10-35098-3	829895	AQ60, 90, 95, 100, 105, 110, 115, 120A, 130 MB18, 20 MD3B, 17C, D Sin rosca | Without thread | Senza filetto | Non fileté	REC3586496	REC975672



GAS DIESEL

IMPULSORES — IMPELLER — GIRANTE — TURBINES

REF	OEM	
REC3586494 JOH09-806B CEF500100GX	3586494 875807 876689	MB10A



REF	OEM	BOMBA PUMP POMPA POMPE	
REC13554-0001 JOH09-812B CEF500124	13554-0001	REC3860703	



REF	OEM	
REC3593659 JOH09-1026B CEF500116GX	35993659	AQ95, 100, 110 AQ115, A, B AQ120 AQ130A, B, C, D BB115A, B, C



REF	OEM	BOMBA PUMP POMPA POMPE	
REC3854286 SHE09959K CEF500103T	3854286	POLEA PULLEY PULIGGIA POULIE	3.0GL, GS 4.3GL, GS, GLM MDA, GLP MDA, GSP MDA 5.0FL, Fi 5.7GL, Gi, GIP MDA, GIP MDACE, GLP MDA 5.8FL, Fi, FSi 7.4GL (MD) 8.2GLP MDA, GLP MDM AQ200B, C AQ225B, C AQ255A



REF	OEM	
REC875575 JOH09-801B CEF500170CG	875575	AQD21A, B MD21A, B 230A, B 250A, B 251A AQ115A, B AQ120B AQ125A, B AQ130A, B, C, D AQ131A, B, C, D AQ140A AQ145A, B AQ151A, B, C AQ165A AQ170A, B, C AQ171A, C AQD21A BB115A, B, C BB140A BB145A BB165A BB170A, B, C MB20A, B, C, D



REF	OEM	
REC10615K SHE10615K CEF500120T	835874	AQ190A AQ240A 64 mm H=41mm



REF	OEM		
REC21213664 CEF500178G	21213664	3.0GLP-J 4.3GL-J, GL-JF, GXi-B, GXi-BF, GXi-C, GXi-CF, GXi-D, GXi-DF, GXi-E, GXi-EF, GXi-J, GXi-JF, OSi-B, OSi-BF, OSi-C, OSi-CF, OSi-D, OSi-DF, OSi-E, OSi-EF 5.0GXi-J, GXi-JF 5.7 Gi-300-J, Gi-300-JF, GXi-J, GXi-JF 8.1Gi-J, Gi-JF, GXi-J, GXi-JF 8.2GSIPWTR	AQ60F, 90, 95, 95A, 100, 110, 120 AQ115A, B AQ130A, B, C, D BB100 BB115A, B, C BB30 DPX415XWTR MB18, F MB20A, B, C Nuevos modelos | New models | Modeli nuovi | Modèles nouveaux



REF	OEM			
REC22120-0001 CEF500104	876120	431A (Producción anterior | Earlier production | Produzione precedente | Production antérieure) 570A 571A 572A	AQ200D (w = 50 mm) AQ205A, D AQ225E, F AQ255B AQ260A, B AQ271A, B, C, D AQ280A AQ290A AQ311A, B BB225A, B, C BB231A BB260A, B, C	6



REF	OEM				
REC21213660 JOH09-1027B CEF500107T	21213660	430A, B 431A, B 432A 434A 500A, B 501A, B 570A 571A 572A AQ175A AQ200D, F AQ205A AQ211A	AQ231A, B AQ255B AQ260A, B AQ271A ,B, C, D AQ280A AQ290A AQ311A, B BB225A, B, C BB231A, BB260A, B, C BB261A	3.0GL, GS (HU, NC, LK, BY, WT, EF) 4.3GIPBYCCE, GIPLKDCE, GIPNCBCE, GIPNCMCE, GLPBYC, GLPHUB, GLPLKD, GLPNCA, GLPNCB, GLPNCS, GSPBYC, GSPLKD, GSPNCB, GSPNCM, GL, GS (MD, HU, NC, LK, BY), Gi 5.0GL, Gi (BY), FL, Fi (HU, NC), FLPNCA, FLPNCS, GIPBYCCE, GLPBYC 5.7GL, Gi, GS, GSi, GIPLKECE, GLIPLKDCE, GLPLKA, GLPLKD, GLPLKE, GSICPLKD, GSIPLKE, GSPBYC, GSPLKD, GSPLKE 5.8FL, Fi, FSi (HU, NC), FLPNCA 7.4Gi, GSi, GL (HU, NC, LK), GIPBYCCE, GIPHUSCE, GIPLKDCE, GIPLKECE, GiPNCACE, GiPNCBCE, GiPNCMCE, GiPNCSCE, GLPHUS, GLPLKD, GLPNCA, GLPNCS, GSIPBYCCE, GSIPLKD, GSIXHUS 8.2GSi (HU, NC, LK, BY), GL (HU), GSIPBYCCE, GSIPLKD, GSIXNCB	4



GUÍA DE IMPULSORES (MÁS COMUNES) — IMPELLER APPLICATION (MORE COMMON) — GUIDA GIRANTE (PIU COMUNE) — GUIDE DES TURBINES (LES PLUS COMMUNES)

		REF	CEF	JABSCO	JOHNSON	SHERWOOD
3.0GLP-C		REC21213660	CEF500107T		JOH09-1027B	
3.0GLP-D, E, J3.0GXI-J3.0GXIC-J		REC21213664	CEF500178G			
4.3GL-J/JF, GXI-J/JF, G/GF, OSI-J/JF, G/GF		REC21213664	CEF500178G			
5.0GL-J/JF, GXI-J/JF, G/G-F, OSI-J/JF, G/G-F		REC21213664	CEF500178G			
5.7GI300-J/JF/F/FF, OSI-J/JF, GXI-J/JF/G/GF, OSXI-J/JF/E/EF		REC21213664	CEF500178G			
7.4GL (MD)		REC3854286	CEF500103T			SHE09959K
7.4GL (HU,NC,LK), GI, GSI, DPX385		REC21213660	CEF500107T		JOH09-1027B	
8.1GI-J/JF,H/HF, GXI-J/JF,G/GF, OSI-J/JF, D/DF		REC21213664	CEF500178G			
8.2GL		REC3854286	CEF500103T			SHE09959K
8.2GSI, DPX415 (HU-BY-WT)		REC21213660	CEF500107T		JOH09-1027B	
500A, B501A, B		REC21213660	CEF500107T		JOH09-1027B	
570A, 571A, 572A, AQ225B	31	REC21213660	CEF500107T		JOH09-1027B	
570A, 571A, 572A, 740A,B	50	REC18777-0001	CEF500104	JAB18777-0001-P		
AQ95, 100, 110 AQ115, A, B BB115A, B, C AQ120 AQ130A, B, C, D		REC3593659	CEF500116GX		JOH09-1026B	
AQ120B AQ125A,B AQ131A, B, C, D AQ140, A BB140A • BB145A AQ145A,B AQ151A, B, C AQ165 AQ170A, B, C AQ171 230A, B 250B		REC875575	CEF500170CG		JOH09-801B	
AQ225A, B,C		REC3854286	CEF500103T			SHE09959K
AQ225B, D, E, F BB225A, B, C BB231A AQ260A, B BB260A, B, C • BB261A AQ271A, B, C, D AQ280A • AQ290A		REC18777-0001	CEF500104	JAB18777-0001-P		
AQ311A, B	50					
AQ231A, B AQ260A BB225A, B, C BB260A, B, C BB261A AQ271A, B, C, D AQ280A • AQ290A		REC21213660	CEF500107T		JOH09-1027B	
AQ311A, B	31					

BOMBAS DE AGUA | WATER PUMPS | POMPE ACQUA | POMPE A EAU

REF	OEM					
JOH10-35098-3	829895	AQ60, 90, 95, 100, 105, 110, 115, 120A, 130 MB18, 20 MD3B, 17C, D Sin rosca | Without thread | Senza filetto | Non fileté			REC3586496	REC975672



REF	OEM			TUBO | TUBE		KIT	KIT EJE SHAFT KIT KIT ASSE KIT ARBRE
JOH10-24707-01	840557 861009	2001, B, AG, BG 2002, B, D, AG, BG 2003, B, D, AG, BG	REC3586496	REC829714	REC925093	REC21951368	REC21951414



REF	OEM			KIT	KIT EJE SHAFT KIT KIT ASSE KIT ARBRE
JOH10-35157-1	858065 840076 833415 833883 807368	MD11D, C MD6A, B MD7A, B MD1B, 2B AQD2B MD5A, B, C MB10A Sin rosca | Without thread Senza filetto | Non fileté	REC3586496	REC21951368	REC21951422



REF	OEM			KIT	KIT EJE SHAFT KIT KIT ASSE KIT ARBRE
JOH10-35157-3	807368 833415 833522 833883	MD11D, C MD6A, B MD7A, B MD1B, 2B AQD2B MD5A, B, C MB10A Sin rosca | Without thread Senza filetto | Non fileté	REC3586496	REC21951368	REC21951422



REF	OEM			TUBO | TUBE	
JOH10-24268-4	858150	2003T, TB	JOH09-1027B	REC418411	REC925093

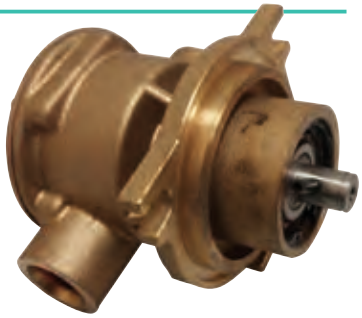

REF	OEM			
JOH10-24130-3	838522 844971	TAMD40A, B AQAD40A, B (Modelos antiguos | old style | modello vecchio | modèles anciens)	JOH09-1028B	REC968971



REF	OEM					
JOH10-24061-3	842843	TMD30A TAMD30A AQAD30A AQD40A MD40A TMD40A, B, C, (Modelos antiguos | old style | modello vecchio | modèles anciens)	REC3841697	REC829433	REC968971	



REF	OEM					
JOH10-24277-3	858469	TMD31A, B TMD41A, B TAMD31A, B AQAD41A, B AQAD31A D41A, B AD31A, B (Modelos antiguos | old style | modello vecchio | modèles anciens)	REC3841697	REC858467	REC968971	



REF	OEM					
REC3583115	3583115 860629 3581558 860827	31, 32, 40, 41, 42, 43, 44, 300 Para manguitos fijados con abrazaderas. For hose connectors with clamps. Modello pompa de montare con manicotti bloccati con fascette Pour les manchons clampés.	REC3841697	REC858467	REC968971	



REF	OEM	
REC3829311	3829311 846354	TAMD61A, B SN (-1101014435 / XXXXX:A) TMD100C, 102A, 122A, 121C, 120B TAMD102A, 102C, 121C, 121D



REF	OEM	
REC3829313	3829313 3829312 866396 845189	TAMD102A, 102D, 103A, 120B, 122A, 122C, 122D, 122P-A, 122P-B, 122P-C



REF	OEM	
REC3837935	3837935 3825493 876809 863437	TAMD162A, B, C, C-B, C-C TAMD163A-A, P-A TAMD165A-A, C-A, P-A



REF	OEM		
REC3593655	3593655 3580945 3580222 3580223 3580910 3580920	D1-30, B, F D2-40, B, F MD2030A, B, C, D MD2040A, B, C, D	REC3593659



REF	OEM			KIT
REC3593654	3593654 3580064 3580944 3580900	D1-13, B, F D1-20, B, F MD2010A, B, C, D MD2020A, B, C, D	REC3593659	REC23035



REF	OEM			KIT
REC3583089	3583089	D2-50F D2-55B, C, D, E, F D2-60F D2-75B, C, F	JOH09-1027B	REC23038



REF	OEM		
REC21141637	21141637 3593656 3884694	D3-110I-A, I-B, I-C D3-130A-A, I-A, I-B, A-B, A-C D3-160A-A-, I-A, I-B, I-C, A-B, A-C D3-190I-B, I-C, A-B, A-C	JOH09-812B



REF	OEM		
REC21379102	21379102 21106041	D3-110 --> D3-220	JOH09-812B



REF	OEM			KIT
REC3584062	3584062	D4-180I-B, I-C, I-D, I-E, I-F D4-210A-A, I-A, I-B D4-225A-C, A-D, I-B, I-C, I-D, I-E, I-F D4-260A-A, A-B, A-C, A-D, D-B, D-C, D-D, I-A, I-B, I-C, I-D D4-300A-A, A-C, A-D, D-A, D-C, D-D, I-A, I-C, I-D	JAB17937-0001-P	REC062MINORKIT



REF	OEM			KIT
REC21419374	21419374	D4-225A-E, A-F D4-260A-E, A-F, D-E, D-F D4-300A-E, A-F, D-E, D-F	REC3841697	REC374MINORKIT



REF	OEM			KIT
REC3838288	3838288	D5A-T, A-TA, A-BTA D7A-T, A-TA, A-BTA D7C-TA, C-BTA	REC3841697	REC288MINORKIT



REF	OEM			KIT
REC21419376	21419376	D6	REC3887761	REC376MINORKIT



REF	OEM			KIT
REC21380890	21380890 3589907 3584063	D6	REC3593573	REC890MINORKIT



BOMBAS DE AGUA SISTEMAS IPS
WATER PUMPS IPS SYSTEM
POMPE ACQUA SISTEMA IPS
POMPE A EAU SYSTÈME IPS

REF	OEM			KIT
REC21380886	21380886 3819485 3836314	D9A D11A	JAB17018-0001	REC886MINORKIT



REF	OEM			KIT
REC22063494	22063494	D11B1-AMP D11B2-AMP (IPS)	JAB17018-0001	REC494MINORKIT



REF	OEM			KIT
REC21219723	21219723	D11A-D (IPS) D11A-C MP D11B2-A MP	REC21730344	REC723MINORKIT



REF	OEM			KIT
REC3838207	3838207 865295	D12D-A, D-B, D-C, C-A, D-F, D-E, D-G	JAB17938-0001-P	REC207MINORKIT



REF	OEM			KIT
REC22905150	22905150 3886848	D13B, C	JAB17938-0001-P	REC207MINORKIT



REF	OEM			KIT
REC22905155	22905155 3589104	D16C-DMH, AMH, BMH, CMH, AMG	JAB17938-0001-P	REC207MINORKIT



IMPULSORES IMPELLER GIRANTE TURBINES

REF	OEM	
REC21730344 CEF500105T JOH09-1029B	2170344	TAMD40 AD40 D11B2 TAMD71B TAMD61A TAMD62A D11A, B, C (IPS)



REF	OEM	
REC875575 JOH09-801B CEF500170CG	875575	AQD21A, B MD21A, B



REF	OEM	
CEF500380	3555413	MB2, 505



REF	OEM	
REC3593659 CEF500116GX JOH09-1026B	3593656 22222936	D1-13 A, B, F D1-20 A, B, F D1-30 A, B, F D2-40 A, B, F MD17D MD2030A, B, C, D MD2040A, B, C, D MD3B MD2020 (101309052+) MD2010 (5101203008+)



REF	OEM	
REC17937-0001 JAB17937-0001-P CEF500114T	3588475	D4-180i-B, I-C D4-210A-A, A-B, i-A, i-B D4-225A-B, A-C, i-B, I-C D4-260A-A, A-B, A-C, D-B, D-C, i-A, i-B, I-C D4-300A-A, A-C, D-A, D-C, I-A, I-C AQ21A MD21A AQD21B MD21B (xxxx103387+)

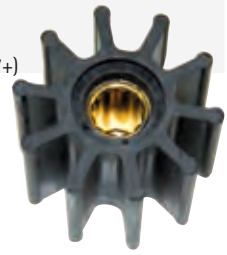

REF	OEM	
REC3593573 JAB17018-0001 CEF500177GT	3593573 21730348	D6-280A-A, A-B, i-A, i-B D6-310A-A, A-B, D-A, D-B, i-A, i-B D6-330A-B, A-C, D-B, D-C, I-B, I-C D6-350A-A, A-B D6-370A-B, A-C, D-A, D-B, D-C, i-A, i-B, I-C D6-435D-A, D-C, i-A, I-C D11A-A D9A2A, B, D, F



REF	OEM	
REC21213664 CEF500178G	21213664	D3-110I-A, I-B, I-C D3-130A-A, A-B, A-C, I-A, I-B, I-C D3-160A-A, A-B, A-C, I-A, I-B, I-C D3-190A-B, A-C, I-B, I-C



REF	OEM	
JAB17938-0001-P CEF500163G	3830459	D12C-A, D-A, D-B, D-C, D-D, D-F MP D13B-E, B-N MH D13C1-A, C2-A, C3-A, C4-A MP D12D-A, B, C, E, G MH • D12 D16C-A, B, C MH, MG

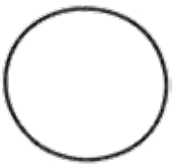

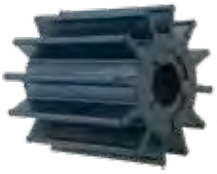

REF	OEM	
REC21213660 CEF500207 JOH09-1027B	21213660	D2-55 A, B, C, D, E D2-75 A, B, C, F MD22A, L-A TMD22A Impulsor con casquillo estriado Grooved socket impeller Girante con mozzo scanalato Turbine avec douille cannelée



REF	OEM	
REC3586496 CEF500121GX JOH09-808B	21951342	2001, B 2002, B 2003, B MD11D MD5A, B, C MD6B MD7A, B



REF	OEM	
REC3586494 CEF500100GX JOH09-806B	3586494	2003T, TB 2010 (-5101203008) 2020 (-5101309052) AQD2B MD1, 1B, 2, 2B, 6 MD1 (14016+) MD2 (4211+) MD2010A, B, C, D MD2020A, B, C, D MD22A, L-A, L-B, P-B TAMD22P-B TMD22A, B AQD21A, B MD21A MD21B (-103386)



REF	OEM	
REC3887761 JOH09-821B CEF500162G	21951358 3887761	TAMD63L-A, P-A D6-280A-E D6-310A-E, D-E D6-300A-F, D-F, A-E, D-E D6330A-F, D-F D6-370A-F, D-F, I-F, A-E, D-E D6-400A-F, DF, A-E D6-435D-F, I-SC-F, I-WJ-F



REF	OEM	
REC875697 JOH09-814B CEF500145T	875697 21951364 875814	TAMD162A, B, C TAMD163A, P-A TAMD102A TAMD103A-A TAMD120B TAMD121C, D TAMD122A, C, D, P-A, P-B



REF	OEM			
REC21730344 JOH09-819B CEF500135	21951362 8777066	AQAD40A, B MD100A, B MD120A TAMD120A TAMD40B TAMD61A TAMD62A TAMD71A, B TAMD72A, P-A TMD100A, C TMD102A TMD120A, B TMD121C TMD122A TAMD73P-A, WJ-A TAMD74A-A, A-B, C-A, L-A, L-B7, P-A, P-B TAMD75P-A	Ø 95 mm	5



REF	OEM			
REC3841697 JOH09-1028B CEF500106GT	3841697 21951356	AD31A, B, D, L-A, P-A, X AD41A, B, D, L-A, P-A AQAD30A, 31A, 41A AQD32A, 40A, 41A AQD70B, C, D D4 D41A, B, D KAD300-A KAD32P KAD42A, B, P-A KAD43P, P-A KAD44P, P-B, P-C 00-A KAMD42A, B, P-A KAMD43P KAMD44P-A, P-B, P-C MD30A, 31A, 32A, 70B, 70C TAMD30A TAMD31A, B, D, L-A, M-A, P-A, S TAMD41A, B, D, H-A, M-A, P-A TAMD42WJ-A TAMD60A, B TAMD70B, C, D, E TMD30A TMD31A, B, D, L-A TMD40A, B, C TMD41A, B, D, L-A THAMD70B-C	Ø 65 mm	6



GUÍA DE IMPULSORES (MÁS COMUNES) — IMPELLER APPLICATION (MORE COMMON) — GUIDA GIRANTE (PIU COMUNE) — GUIDE DES TURBINES (LES PLUS COMMUNES)

DIESEL

	REF	CEF	JABSCO	JOHNSON
MD1A, BMD2A, BMD5A, B, CMD6A, B MD7A, BMD11C, D (Lid 4 screws)	REC3586496	CEF500121GX		JOH09-808B
MD1A, BMD2A, BMD5A, B, CMD6A, B MD11C, D (Lid 6 screws)	REC3586494	CEF500100GX		JOH09-806B
MD3BMD17C, D20012002 2003	REC3586496	CEF500121GX		JOH09-808B
MD21A, BAQAD21A, B	REC875575	CEF500170CG		JOH09-801B
MD22A, BTMD22A, BTAMD22A2003T D2-50, -55, -60, -75		CEF500107T		JOH09-1027B
MD2010 SN -5101309052 MD2020 SN -5101309052	REC3586494	CEF500100GX		JOH09-806B
MD2010 SN +5101203009 MD2020 SN +5101309053 MD2030 MD2040	REC3593659	CEF500116GX		JOH09-1026B
MD30A, B, D, AQTAMD30A, B, D, AQTMD30A, B, D, AQAQAD30A, 31A AD31, A, B, D, XC, P, -AMD31, ATMD31A, B, D, L-ATAMD31A, B, D, P, L, M, S-A KAD32AMD40ATMD40A, B, CTAMD40B AQD40AAQAD40A, BTMD41A, B, D, L-ATAMD41A, B, D D41A, B, D, L-AAD41A, B, DAQD41AAQAD41A TAMD41P, L, M, H-A, H-BAD41P, L-AKAD42A, B, P-AKAMD42A, B, P-A	REC3841697	CEF500106GT		JOH09-1028B
TAMD40 AD40	REC21730344	CEF500105T		JOH09-1029B
KAD43P-AKAMD43P-AKAD44P-A, P-B, P-CKAMD44P-A, P-B, P-C KAD300AKAMD300A	REC3841697	CEF500106GT		JOH09-1028B
D1-13, -20, -30, -40	REC3593659	CEF500116GX		JOH09-1026B
D3	REC21213664	CEF500178G		
D4 E-F AQ & IPS	REC3841697	CEF500106GT		JOH09-1028B
D4 A-D AQ & IPS, ALL INBOARD MODELS	REC17937-0001	CEF500114T	JAB17937-0001-P	
D6 E-F AQ & IPS	REC3887761	CEF500162G		JOH09-821B
D6 A-D AQ & AQ & IPS, ALL INBOARD MODELS	REC3593573	CEF500177GT	JAB17018-0001	

COMPONENTES BOMBA DE AGUA | WATER PUMP COMPONENTS | COMPONENTI DELLA POMPA DELL'ACQUA | ACCESSOIRES DE POMPE A EAU

VÁLVULA DE VACÍO | VACUUM VALVE | VALVOLA DI VUOTO | VANNE À VACUUM

REF	OEM		Ø
REC21662702	21662702	D1, D2 MD201, MD2020, MD2030, MD2040	19 mm

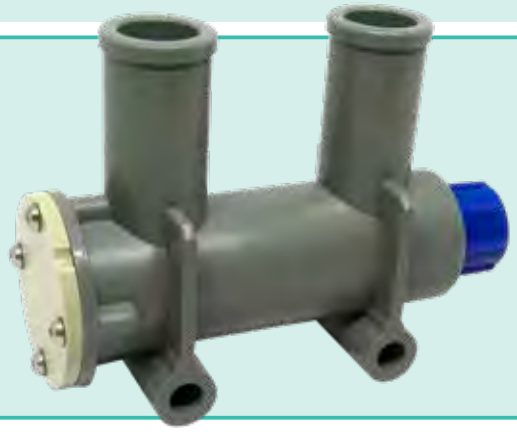

new

TOPE BOMBAS | PUMP STOP | ALETTA ARRESTO POMPE | BUTEE DE POMPE A EAU DE MER

REF	OEM	BOMBA PUMP POMPA POMPE
REC3857954	3857954	REC21214599 REC21214601 RM21214596 RM21214595

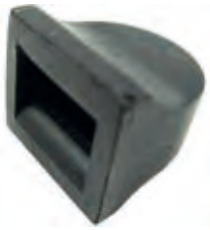

CONSOLA PARA BOMBAS | PUMP CONSOLE | TIRANTE PER POMPE | SUPPORT DE POMPE A EAU

REF	OEM
REC3812240	3812240



REF	OEM
REC3817687	3817687



CONSOLA PARA BOMBAS E INTERCAMBIADORES DE CALOR | CONSOLE FOR PUMPS AND HEAT EXCHANGERS | TIRANTE PER POMPA E SCAMBIATORE DI CALORE | SUPPORT DE POMPE A EAU ET D'ECHANGEURS

REF	OEM
REC3817688	3817688



PIN CENTRADOR | LOOKING PING | PIN CENTRATORE | PIN DE CENTRAGE

REF	OEM
REC826239	826239



new

DIESEL GAS

PASADOR EJE BOMBA DE AGUA | PIN | SPINOTTO | CLAVETTE

REF	OEM	
REC973639	973639	2001, 2002, 2003



new

COJINETE BOMBA | WATER PUMP BEARING | CUSCINETTO POMPA | ROULEMENT DE POMPE

Cojinete (2 Piezas) para bomba en cigüeñal tapa de 4 tornillos

Bearing (2 pcs) 4 bolt crankshaft cover

Cuscinetto (2pz) per pompa albero motore, 4 vite nel coperchio

Roulement (2 pièces) pour la pompe , couvercle avec 4 vis.

REF	OEM		
REC183861	183861	175A 200C, D, F 211A 225C, D, F 231A, B 255A, B 260A 271A, C 290A	311A, B 430A, B 431A, B 500A, B 570A, 571A, 572A BB225A, AV, B, C 231B 255AV 260A, AV, B



REF	OEM	
RECV11010	861812 3578536 3884972 11010 6600756	2003T, B, TB D31, 32, 40, 41, 42 43, 44, 300



new

REF	OEM	BOMBA PUMP POMPA POMPE
REC181717	181717	JOH10-35098-3 JPH10-24707-01 REC3593654



TAPA DEPÓSITO EXPANSIÓN | EXPANSION DEPOSIT COVER | COPERCHIO DEPOSITO ESPANSIONE | BOUCHON DE VASE D'EXPANSION

REF	OEM
REC1674083	1674083 1357775 463828 1674084 3850064



TORNILLOS TAPA DE LA BOMBA | SCREW PUMP COVER | VITI COPERCHIO POMPA | VIS DU COUVERCLE DE POMPE

REF	OEM		
REC855728	855728	V6 & V8	6
REC840785	804693 803723 840785	AQ200D, 225D, 225B, 260A, 280A, 290 MD1A, B, MD2D, B, MD3B, MD17C, A	6
REC841693	841693	AQ175A, 200D, 211A, 225D, F V6 & V8	4
REC840384	833997 840384	MD11C	4



REC855728
REC840785



REC841693
REC840384

new

REF	OEM
REC21951302	21951302



PESTAÑA DE SUJECCIÓN PARA BOMBAS CON COJINETE DE BOLA | MOUNTING CLAMP FOR BALL BEARING PUMPS | PIASTRA DI SUPPORTO PER POMPA CON CUSCNETTO A SFERE | BRIDE DE POMPE A EAU AVEC ROULEMENT

REF	OEM	
REC833878	833878	AQ60, 90, 95, 100, 105, 110, 115, 120A, 130 MD6A, B MD7A, B MD1B, 2B, 3B AQD2B MD11C, D MD17C, D MD20A, B, C



ANILLO TÓRICO TRASERO BOMBA AGUA | BACK O-RING | FASCIA TONDA | JOINT TORIQUE

new

REF	OEM	
REC3580380	3580380 3580917	D1/D2 MD2010 MD2020 MD2030 MD2040



JUNTA TAPA IMPULSOR | IMPELLER GASKET COVER | GUARNIZIONE COPPERCHIO GIRANTE | JOINT DE COUVERCLE DE TURBINE

new

REF	OEM		BOMBA PUMP POMPA POMPE
REC833994	833994	MD11, MD17 MD1, MD2, MD5 2001, 2002, 2003 AQD2B, MD6, MD7, MB10A	JOH10-24707-01 JOH10-35157-1 JOH10-35157-3
REC840385	840385	AQ115, AQ130, AQ165, AQ170 B20, BB115, BB170 MB20, AQD21, AQD2B D1, D2, MD11, MD17, MD1, 2010, 2020, 2030, 2040	JOH10-35098-3 REC3593654
REC819959	819959	D1/D2 MD1, MD11, MD17 MD2010, 2020, 2030, 2040 AQ115, 130, 165, 170	



REC833994



REC840385



REC819959

JUNTA TAPA BOMBA | PUMP COVER GASKET | GUARNIZIONE POMPA | JOINT DE POMPE

new

REF	OEM		BOMBA PUMP POMPA POMPE
REC124240-01883	862583	D11, D12, D13, D16 MD120, 122, 102, 103, 120, 162, 163, 165	
REC827250	827250	AQ & BB 115, 130, 165,170, 20 D21	JOH10-32058-1



REC124240-01883



REC827250

CENTRADORES BOMBA ASPIRACIÓN | WATER PUMPS CROSS PIECES | CENTRATORI POMPA ASPIRAZIONE | TOC D'ENTRAINEMENT DE POMPE A EAU

REF	OEM	
REC831009	831009 806256	AQ120, 120B, 125, 130, 131, 140A, 145, 151, 165, 170, 171, 230A, 250A, 251A MD3B MD17C, D MD21A, B



REF	OEM	
REC858467	858467	MD31, 41 KAD32, 42, 43, 44, 300 KAMD42



REF	OEM		
REC829433	829433	TMD, TAMD, AQAD, MD30A TMD, AQD, MD40A	6



CIRCLIP | CIRCLIP | CIRCLIP | CIRCLIP

new

REF	OEM
REC914515	914515



KIT RETENES Y JUNTAS BOMBA ASPIRACIÓN / GASKET KITS FOR RAW WATER PUMPS / KIT PARAOLIO E GUARNIZIONI / KIT JOINTS DE POMPE

REF		
REC22042	AQ60, 90, 95, 100, 105A, 110, 115, 120A AQ130A, B, C, D MB18 • MB20A, B, C • MD3B, 17C, D BB30, 100 • BB115, B, C Para bombas sin cojinete de bola For pumps without ball bearing Per pompe senza cuscinetto Pour pompe, sans roulement	REC3593659



REF		
REC22009	AQ60F, 90, 95, 100, 105A, 110, 115, 120, 130 MB18, 20 • MD3B, 17C, D BB30, 100 • BB115B, C D1-13A, B, F • D1-20A, B, F • D2-40A, B Para bombas sin cojinete de bola For pumps without ball bearing Per pompe senza cuscinetto Pour pompe, sans roulement	REC3593659



REF		
REC22047	AQ165A AQ170A, B, C BB165A BB170A, B, C AQD21A, B MD21A MO (103387+) MD21B	REC875575



REF		
REC22072	AQ120B, 125, 131, 140, 145, 151, 171, 230A, 250A, 251A	REC875575



REF		
REC22053	MB10A D1A, D2A MD1A, B • MD2, 2A, 2B, 6A AQD2A, B Versiones nuevas con cojinete plano Early version with plain bearing Nuova versione con cuscinetto piano Nouvelle version avec roulement plat	REC3586494



REF		
REC22054	MD5A, B, C MD6B MD7A, B MD11C, D 2001, 2002, 2003AG, B, BG	REC3586494



REF		
REC22040	2003T, TB	REC21213660



REF	
REC22167	MD2010C, D MD2020C, D MD2030C, D MD2040C, D



REF			
REC22016	D30, 31, 32, 40, 41 ,42, 43, 44	REC3841697 Ø 65 mm	6



REF			
REC22089	AQAD40A, B TAMD40A, B	REC21730344 Ø 95 mm	5

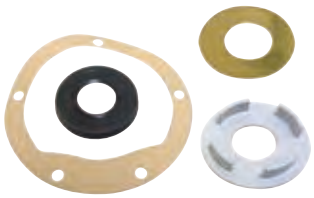

KITS REPARACIÓN BOMBA ASPIRACIÓN — IMPELLER WATER PUMPS SERVICES KIT — KIT RIPARAZIONE POMPA ASPIRAZIONE — KITS RÉPARATION DE POMPE A EAU

KITS DE EJE — SHAFT KIT — KIT ASSE — KIT ARBRE

new

REF	OEM	
REC21951422	21951422	MD5, MD6, MD7, MD11



new

REF	OEM	
REC21951414	21951414	2001, 2002, 2003



KITS DE BOMBA — PUMP KIT — KIT POMPA — KIT POMPE

new

REF	OEM	
REC21951368	21951368	2001, 2002, 2003



REF	OEM		
REC875698	875698 21951420	AQ60, 90, 95, 100, 105, 110, 115, 120, 130 MD3B, 17C, 17D • MB18 • M20A, B, C	REC875698



REF	OEM		
REC22073		AQ60, 90, 95, 100, 105, 110, 115, 120, 130 MD18, 20, 3B, 17C, 17D	REC3593659

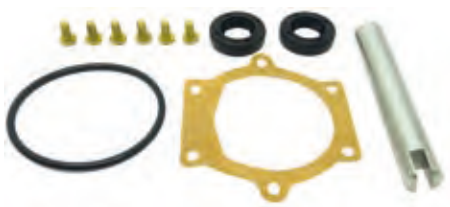

REF	OEM	
REC23035		MD2010C, D • MD2020C, D MD2030A, B, C, D • MD2040A, B, C, D D1-13A, B, F • D1-20A, B, F • D1-30A, B, F • D2-40A, B, F



REF	
REC23038	D2-55A, B, C, D, E, F D2-75A, B, C, F



REF	
REC207MINORKIT	D12D-A MH, D-B MH, D-A MP, D-B MP, D-C MP, D-D MP, D-E MP, D-F MP, D-G MP, D-H MP, D-C MH, C-A MP D16C-A MH, C-B MH, C-C MH, C-A MG



REF	OEM		
REC875383	875383	AQ165A, 170A, 170B, 170C BB165A, 170A, 170B, 170C MD21A (103387+), 21B AQD21A (103387+), 21B Viene sin leva Cam not included Camma non inclusa Livré sans came	REC875575



REF	OEM		
REC875574	875574 876081	AQ120B AQ125A, B AQ131A, B, C, D AQ140A AQ145A, B AQ151A, B, C Viene sin leva Cam not included Camma non inclusa Livré sans came	REC875575



REF	OEM		
REC875584	875584	MD5A, B, C MD6B MD7A, B MD11C Viene sin leva y sin tapa Cam & cover not included Camma e coperchio non inclusa Livré sans came ni couvercle	REC3586496



REF	OEM		
REC877373	877373 876088 876529 875759	31, 32, 40, 41, 42, 43, 44, 300	REC3841697 Ø 65 mm



REF	OEM		
REC875756	875756	2001, 2003 AG, B, BG 2002AG, B, BG, D MD1A, B MD2A, B MD5A, B, C MD6A, B MD7A, B MD11C, D AQD2B Viene sin leva y sin tapa Cam & cover not included Camma e coperchio non inclusa Livré sans came ni couvercle turbo.	REC3586496



REF	OEM		
REC875769	875769 21951410	AD40B AQAD40A, B TAMD40A, B	REC21730344 Ø 95 mm



REF	BOMBA PUMP POMPA POMPE
REC062MINORKIT	REC3584062



REF	BOMBA PUMP POMPA POMPE
REC288MINORKIT	REC3838288



REF	BOMBA PUMP POMPA POMPE
REC890MINORKIT	REC21380890



REF	BOMBA PUMP POMPA POMPE
REC886MINORKIT	REC21380886



REF	BOMBA PUMP POMPA POMPE
REC376MINORKIT	REC21419376



REF	BOMBA PUMP POMPA POMPE
REC494MINORKIT	REC22063494



REF	BOMBA PUMP POMPA POMPE
REC374MINORKIT	REC21419374



REF	BOMBA PUMP POMPA POMPE
REC723MINORKIT	REC21219723



REF	BOMBA PUMP POMPA POMPE
REC207MINORKIT	REC3838207 REC22905150 REC22905155



RETENES | SEALS | PARAOLIO | BAGUE

CUERPO TERMOSTATO | THERMOSTAT HOUSING | CORPO TERMOSTATO | CORPS DE THERMOSTAT

REF	OEM	
REC3583913	3583913 1542198	D31, D41, D300, D32, D42, D43, D44



RETÉN INFERIOR FILTRO AGUA ANTIGUO | LOWER SEAL OLD WATER FILTER | PARAOLIO INFERIORE FILTRO ACQUA VECCHIO | BAGUE INFÉRIEURE DE FILTRE A EAU (ANCIEN)

REF	OEM	
REC845354	845354	D31, D41, D30, D13



EJE DE LA BOMBA | PUMP SHAFT | ASSE POMPA | JOINT TORIQUE D'ARBRE DE POMPE

REF	OEM	
REC960166	960166	2003 D30, 31, 41, 70, 32, 300, 42, 43, 44, 40, 3, 4 740 AQ & BB 115, 130, 165, 170, 20



DISTRIBUIDOR — DISTRIBUTOR — DISTRIBUTORE — JOINT DE DISTRIBUTEUR

new

REF	OEM	
REC969331	969331 967763	250A, B 251A AQ131A, B, C, D AQ151A, B, C AQ171A, C



RETÉN BOMBA DE AGUA — WATER PUMP SEALS — PARAOLIO POMPA ACQUA — JOINT SPI DE POMPE A EAU

REF	OEM	GAS	DIESEL
REC804695	804695	AQ60, 90, 95, 100, 105, 110, 115, 120A, 130 MB10A, 18, 20	MD1B, 2B, 3B, 6A MD17C, D



REF	OEM	GAS	DIESEL
REC833996	833996	AQ60, 90, 95, 100, 105, 110, 115, 120A, 130 MB18, 20	MD3B MD5 A, B, C, D1, D2 MD6B MD7A, B MD11C, D, 2001, 2002, 2003 MD17C, D 2010, 2020, 2030, 2040 Para bombas con rodamiento en eje bomba For pumps with bearing in shaft Per pompa con cuscinetto nell'asse della pompa Pour pompe avec roulement dans l'arbre de la pompe



REF	OEM	GAS	DIESEL
REC827247	827247	AQ120B, 125, 131, 140, 145, 151, 165, 170, 171, 230A, 250A, 251A AQ430A, B AQ431A, B 500A, B 501A, B 570A, 571A, 572A Para bomba con tapa de 4 tornillos. Todas las bombas V6/V8 modernas instaladas en cigüeñal. 4 bolt cover. All modern V6 / V8 pumps installed on crankshaft. Per pompa con 4 viti nel coperchio. Tutte le moderne pompe V6 / V8 installate sull'albero motore. Pour pompe avec couvercle à 4 vis. Toutes les pompes V6/V8 modernes montage en bout de vilebrequin.	2003T MD21A (103387+), B MD30, 31, 40, 41 KAD42A KAMD42A, D3, 300 Para bomba con tapa de 6 tornillos 6 bolt cover Per pompa con 6 vite in coperchio Pour pompe avec couvercle à 6 vis



new

REF	OEM	
REC430172	430172	AQ165A AQ170A, B, C BB165A BB170A, B, C



RETENES TUBOS REFRIGERACIÓN — ENGINE HOSES SEALS

REF	OEM	Ø ext	
REC831622	831622	29 mm	AQ120B AQ125A, B AQ131A, B, C, D AQ140A AQ145A, B AQ151A, B, C AQ171A, C



REF	OEM	Ø ext	
REC831617	831617	29 mm	AQ165A AQ170A, B, C, MD21 (103387+), B



REF	OEM	Ø ext	
REC418412	418412	27 mm	AQ120B AQ125A, B AQ131A, B, C, D AQ140A AQ145A, B AQ151A, B, C, D AQ165A AQ170A, B, C AQ171A, C 230A, 250A, 251A MD21A, B



REF	OEM	Ø ext	
RM831960	831960	21 mm	2001, 2002, 2003



REF	OEM	Ø ext	
REC418445	418445	23 mm	AQ90, 95, 100, 105, 110, 115, 120, 130 MD11C, D MD17C, D 2001, 2002, 2003



REF	OEM	Ø ext	
REC430020	430020	34 mm	AQ120B AQ125A, B AQ131A, B, C, D AQ140A AQ145A, B AQ151A, B, C AQ171A, C 230A, 250A, 251A



GOMMINI TUBI DI REFRIGERAZIONE — JOINTS TUYAUX DE REFROIDISSEMENT

REF	OEM	Ø ext	
REC829714	829714	17 mm	AQ90, 95, 100, 105, 110, 115, 120, 130 MB10A MD5A, B, C MD7A, B MD11D



REF	OEM	Ø ext	
REC418411	418411	20 mm	AQ90, 95, 100, 105, 110, 115, 120, 130 MB18, 20 MD11C, D MD17C, D 2001, 2002, 2003



new

REF	OEM	
REC968555	968555	AQ131, AQ151, AQ171 230, 250, 251



new

REF	OEM	
REC430272	430272	AQ, BB 165 & 170



new

REF	OEM	
REC430018	430018	AQ165A AQ170A, B, C BB165A BB170A, B, C



new

REF	OEM	
REC955976	955976 12262 926033 14012262 6647311	AQ120, 125, 140, 145 BB140, 145



KITS RETENES TUBOS REFRIGERACIÓN — ENGINE HOSES SEALS KIT

REF	
REC22061	AQ115, 130 BB115



REF	
REC22037	AQ131, 151, 171, 230, 250, 251



KIT GOMMINI TUBI DI REFRIGERAZIONE — KITS JOINTS POUR TUYAUX DE REFROIDISSEMENT

REF	
REC22051	AQ120B, 125, 140, 145 BB140A, 145A



REF	
REC22012	AQ165, 170 BB165, 170



VOLVO

RECAMBIOS MARINOS

KITS RETENES TUBOS REFRIGERACIÓN — ENGINE HOSES SEALS KIT — KIT GOMMINI TUBI DI REFRIGERAZIONE — KITS JOINTS POUR TUYAUX DE REFROIDISSEMENT

REF	OEM	
REC22011	876224	2001, 2002, 2003, AG, B, BG



REF	
REC22017	2002, 2003, AG, B, BG Con circuito agua dulce. Fresh water cooling system Circuito acqua dolce Circuit eau douce



REF	
REC22008	2003T, TB Con circuito agua dulce. Fresh water cooling system Circuito acqua dolce Circuit eau douce



REF	
REC22019	MD5A, B, C



REF	
REC22024	MD6A, B MD7A, B



REF	
REC22021	MD11C, D



REF	
REC22025	MD17C, D



REF	
REC22114	MD30A TMD30A



REF	
REC22115	AQAD30A TAMD30A AD30A



REF	
REC22116	MD40A TMD40A, B, C TAMD40A, B AQD40A AQAD40A AD40B



REF	
REC22113	D31, 32, 41, 42, 43, 44



TUBO AGUA TERMOSTATO — THERMOSTAT WATER TUBE — TUBO ACQUA TERMOSTATO — TUYAU D'EAU THERMOSTAT

REF	OEM	
REC968927	968927	D31, D41, D300, D32, D42, D43, D44



NTERCAMBIADOR / EXCHANGER / SCAMBIATORE / ECHANGEUR

new

REF	OEM		
REC430272	430272	D70	



new

REF	OEM		
REC855582	855582	230, 250, 251 AQ 131, 151, 171	



new

REF	OEM		
REC925096	925096 12330	D40, D162, 163, 165	124.5 X 3 mm



ADMISIÓN AIRE / AIR INTAKE / ASPIRAZIONE ARIA / ADMISSION D'AIR

new

REF	OEM	
REC948610	948610	39.2 X 3 mm



ENFRIADOR / COOLER / RAFFREDDATORE / REFFROIDISSEUR

new

REF	OEM		
REC925068	925068 23405 14023405 11991571	MD30	42.2 X 3 mm



SISTEMA DE REFRIGERACIÓN / COOLING SYSTEM / SISTEMA RAFFREDAMENTO / SYSTÈME DE REFFROIDISEMENT

new

REF	OEM		
REC925096	925096 12330	IPS, MS3	124.5 X 3 mm



new

REF	OEM	
REC948610	948610	39.2 X 3 mm



new

REF	OEM		
REC925066	925066 12291 14213244 14012291 213244	36.2 X 3 mm	



new

REF	OEM	
REC925055	925055	14.3 X 2.4 mm



new

REF	OEM	
REC925255	925255	64.5 X 3 mm



new

REF	OEM	
REC858986	858986 842744	



CUERNO ESCAPE | EXHAUST TUBO | CORNA DI SCARICO | CORNE D'ÉCHAPPEMENT

REF	OEM		
REC925068	925068 23405 14023405 11991571	D4, D6	42.2 X 3 mm



COLECTOR ESCAPE | EXHAUST MANIFOLD | COLLETTORE SCARICO | COLLECTEUR D'ÉCHAPPEMENT

REF	OEM	
REC838766	838766	D31, D41, D32, D300, D42, D43, D44



SISTEMA LUBRICACIÓN | LUBRICATION SYSTEM | SISTEMA LUBRIFICAZIONE | SYSTÈME DE LUBRIFICATION

REF	OEM	
REC469846	469846 424342	



REF	OEM		
REC949659	949659 14012288 12288 925065		34.2 X 3 mm



REF	OEM	
REC469483	469783 422581	D31, D41, D30, D40, D432, D42, D43, D44, D13, D300



REF	OEM			
REC949657	949657 13949657 925060	D IPS		22.2 X 3 mm



TAPONES DRENAJE | DRAIN TAPS | RUBINETTI | BOUCHONS DE VIDANGE

REF	OEM		ø
REC82744	82744	AQ60, 90, 95, 100, 105, 110, 115, 120, 130, 140, 145, 151, 165, 170, 171, 230A, 250A, 251A MB10A, 18, 20 MD19, 21, 27, 29, 32	1/8"



REF	OEM		ø
REC82745	82745	AQ90, 95, 100, 105, 110, 115, 120, 130, 140, 145, 151, 165, 170, 171, 230A, 250A, 251A MB18, 20 AQD40 AQAD40 TMD40	1/4"



REF	OEM		
REC829592	829592	MD5C MD11C, D MD17C, D	



REF	OEM		ø
REC807036	807036	MD1A, B • MD2A, B • MD3B MD5A, B • MD6A MD6B (Versión antigua | Old version | Versione vecchia | Ancienne version)	10 x1



REF	OEM		ø
REC997641	949918	230A, 250A, 251A, 430, 431 500B, 501B, 570, 572 MD30, 31, 40, 41	1/4"



REF	OEM		ø
REC947893	947893	MD31A, B MD40, 41B 2001, 2002, 2003	1/4"



REF	OEM		ø
REC997641	947894	AQ151, 171 230A, 250A, 251A	1/4"



MANGUITOS DE MOTOR HOSES

MANICOTTO MOTORE DURITE MOTEUR

MANGUITO HOSE

MANICOTTO DURITE

REF	OEM		
RM3852289	3852289	3.0 (1994-98) MD, HU, LK, NC	



REF	OEM		
RM3857391	3857391	3.0 (1998-11) BY, EF, WT	



REF	OEM		
RM3852288	3852288	V6 & V8 4.3, 5.0, 5.7	



REF	OEM		
REC3862523	3862523	V6 & V8 (Nuevos modelos | New models | Nuovi modelli | Nouveaux modèles)	



MANGUITO CIRCUITO REFRIGERACIÓN CERRADO CLOSED COOLING SYSTEM HOSE

MANICOTTO SYSTEMA RAFFREDAMENTO CHIUSO DURITE SYSTÈME REFROIDISSEMENT FERMÉ

REF	OEM	
REC3862852	3862852	V6 & V8 (Nuevos | News | Nuovi | Nouveux)

new



CORREAS Y COMPONENTES | BELTS & COMPONENTS | CINGHIE E COMPONENTI | COURROIES ET COMPOSANTS

PIÑON CIGÜEÑAL | CRANKSHAFT GEAR | PIGNONE ALBERO MOTORE | PIGNON DE VILEBREQUIN

REF	OEM	
RM855428	855428	AQ125A AQ131A, B, C, D AQ145B AQ151A, B, C 230, 250



PIÑON ARBOL DE LEVAS | CAMSAHFT GEAR | PIGNONE ALBERO A CAMME | PIGNON D'ARBRE À CAME

REF	OEM		PIEZAS NECESARIAS REQUIRED PARTS PARTI NECESSARIE PIECES NÉCESSAIRES
RM856239	856239 855473 831972	AQ125A AQ131 A, B, C, D AQ145B AQ151 A, B, C 230, 250	2



CORREA DISTRIBUCIÓN | TIMING BELT | CINGHIA DISTRIBUZIONE | COURROIE DE DISTRIBUTION

REF	OEM	
REC463377	463377	AQ120B AQ125A AQ131A, B, C, D AQ140A AQ145A, B AQ151A, B, C 230A, B 250A, B
REC855506	855506	251A AQ71 A, B, C B25



TAPÓN SEGUIDAD TAPA DE CORREAS | PLUG SAFETY COVER BELTS | TAPPO SICUREZZA COPERCHIO CINGHIE | BOUCHON D'ÉTANCHÉITÉ, CARTER DE COURROIES

REF	OEM	
REC861019	861019	KAD32, 42, 43, 44, 300



KIT DISTRIBUCIÓN | TIMING BELT KIT | KIT DISTRIBUZIONE | KIT DISTRIBUTION

REF	OEM	
REC31359568	31359568 31258305 30731772	D3-110I-A, I-B, I-C, I-D, I-E, I-F D3-130A-A, A-B, A-C, I-A, I-B, I-C D3-140A-E, A-F, I-E, I-F, A-D D3-150I-D, I-E, I-F D3-160A-A, A-B, A-C, I-A, I-B, I-C D3-190A-B, A-C, I-B, I-C D3-170I-D, I-E, I-F, A-D, A-E, A-F D3-200I-D, I-E, I-F, A-D, A-E, A-F D3-220A-D, A-E, A-F, I-D, I-E, I-F



POLEA RUPTURA | RUPTURE PULLEY | PULEGGIA | POULIE

REF	OEM	
REC3860079	3860079	4.3 GI, GSI, GXI, OS 5.0 GI, GSI, GXI 5.7 GI, GXI, OS 7.4 GI, GSI Se instala bajo el alternador It is installed under the alternator È installato sotto l'alternatore À installer sous l'alternateur
RM3885250	3885250 3587858 3587859 3861010	4.3 GL, GXI, GI, OSI 5.0 GXI, GI, OSI 5.7 GI, GXI, OSI 8.1 GI, GXI, IPSCE, OSI



REC3860079



RM3885250

RODILLO TENSOR | TENSION ROLLER | TENDICINGHIA | GALET TENDEUR

REF	OEM		Ø	TENSOR TENSIONER TENDICINGHIA TENDEUR
REC3582324	3582324	KAD32, 43, 44, 300 KAMD43, 44, 300 TAMD42WJ-A	95 mm	
REC21585053	21585053			RM3885250
REC861563	861563	KAD32P-A, 43, 44, 300 KAMD43, 44, 300 TAMD42WJ-A		


REC3582324


REC21585053


REC861563

TENSOR CORREA ALTERNADOR D4/D6 | ALTERNATOR BELT TENSIONER D4/D6 | TENDICINGHIA ALTERNATORE D4/D6 | TENDEUR DE COUROIE D'ALTERNATEUR D4/D6

REF	OEM	
REC22774756	22774756 21344508 3582694 3583665	D4-180, 225, 260, 300, 310 D6-280, 300, 310, 330, 370, 400, 435



TENSOR CORREA COMPRESOR D4/D6 | COMPRESSOR BELT TENSIONER D4/D6 | TENDICINGHIA COMPRESSORE D4/D6 | TENDEUR DE COUROIE DU COMPRESSEUR D4/D6

REF	OEM	
REC22171036	22171036 21786692 3847481 3883784 3588305 3582692	D4-260, 300 D6-350, 370, 400, 435



POLEA COMPRESOR ALTERNADOR | ALTERNATOR COMPRESSOR PULLEY | PULEGGIA ALTERNATORE | POULIE DU COMPRESSEUR ALTERNATEUR

REF	OEM	
REC21280913	21280913 3848896 3809465 3883786 21172053	D4-260, 300 (SN -2004017297) D6-350, 370, 400, 435 (SN -2006032252)
REC3847482	3847482	D4-260, 300 (SN 2004017298+) D6-350, 370, 400, 435 (SN 2006032252+)
REC31251252	31251252 30757056 30637961	D3-110I-A, I-B, I-C D3-130A-A, I-A, A-B, I-B, A-C, I-C D3-160A-A, I-A, A-B, I-B, A-C, I-C D3-190A-B, I-B, A-C, I-C


REC21280913


REC31251252


REC3847482

TENSIÓMETRO DISTRIBUCIÓN | TENSIONER | TENDICINGHIA DISTRIBUZIONE | TENDEUR

REF	OEM	
REC855507	855507	AQ171 A, C 251A KAD42A KAMD42A KAD42B, KAMD42B (Para compresor | For compressor | Per compressore | Pour compresseur : -2204208023)
REC831986	831986	AQ120B, 125, 131, 140, 145, 151, 230A, 250A, 250B


REC855507


REC831986

GUÍA DE CORREAS SERPENTIN Y TENSORES / SERPENTINE BELTS & TENSIONERS GUIDE / GUIDA CINGHIE SERPENTINA E TENDICINCHIE MOTORE / GUIDE DES COURROIES SERPENTIN ET TENDEURS

	SERPENTIN SERPENTINE SERPENTINA SERPENTIN	TENSOR TENSIONER TENDICINGHIA TENDEUR
3.0GLM-C	RM3586324	
3.0GLP-C, -D	RM3586325	
3.0GLP-J, -N	REC3888177	
3.0GXI-J	REC21132392	
3.0GXIC-J	REC21132392	
4.3GIPEFS	REC3860086	REC3860079
4.3GL-G, -GF	RM3889124	RM3885250
4.3GL-J, -JF	REC21132390	RM3885250
4.3GL-P	RM21399021	RM3885250
4.3GXI-A, -B, -BF, -C, -CF, -D, -DF	REC3860086	REC3860079
4.3GXI-E, -EF	RM3586326	REC3860079
4.3GXI-F, -FF, -G, -GF	RM3889124	RM3885250
4.3GXI-P, -Q	RM21399021	RM3885250
4.3GXIE-P, -Q	RM21399021	RM3885250
4.3GXI-225-R, GXIE-225-R	RM21399021	RM3885250
4.3GXIE-J, -JF, -M	REC21132390	RM3885250
4.3GI-200-R	RM21399021	RM3885250
4.3OSI-J, -JF	REC21132390	RM3885250
4.3OSI-B, -BF, -C, -CF, -D, -DF	REC3860086	REC3860079
4.3OSI-E, -EF	RM3586326	REC3860079
4.3OSI-G, -GF	RM3889124	RM3885250
V6-200-A, -225-A, -225-E-A	RM21399021	RM3885250
5.0GIPEFS, GSIPEFS	REC3860086	REC3860079
5.0GL-H, -HF	RM3889124	RM3885250
5.0GL-J, -JF	REC21132390	RM3885250
5.0GIC-J, -JF	REC21132390	RM3885250
5.0GICE-J, -JF, -M, -MF	REC21132390	RM3885250
5.0GXI-A, -B, -BF, -C, -CF, -D, -DF	REC3860086	REC3860079
5.0GIC-225-S, GICE-225-S	RM21399021	RM3885250
5.0GXIE-270-R	RM21399021	RM3885250
5.0GXIC-270R	RM21399021	RM3885250
5.0GXI-270-R	RM21399021	RM3885250
5.0GXICE-270-R	RM21399021	RM3885250
5.0GXICE-J, -JF, -M, -MF	REC21132390	RM3885250
5.0GXICE-P	RM21399021	RM3885250
5.0GXIC-J, -JF	REC21132390	RM3885250
5.0GXIC-P	RM21399021	RM3885250
5.0GXI-E, -EF	RM3586326	REC3860079
5.0GXIE-J, -JF, -K, -KF, -M, -MF, -N	REC21132390	RM3885250
5.0GXIE-P	RM21399021	RM3885250
5.0GXI-F, -FF, -G, -GF	RM3889124	RM3885250
5.0GXI-J, -JF, -N	REC21132390	RM3885250
5.0GXI-P	RM21399021	RM3885250
5.0OSI-B, -C, -CF, -D, -DF	REC3860086	REC3860079
5.0OSI-E, -EF	RM3586326	REC3860079
5.0OSIE-J, -JF	REC21132390	RM3885250
5.0OSI-F, -FF, -G, -GF	RM3889124	RM3885250
5.0OSI-J, -JF	REC21132390	RM3885250
5.7GI-300-J, -JF, -N	REC21132390	RM3885250
5.7GI-300-P, -300-R	RM21399021	RM3885250
5.7GI-A, -B, -BF, -C, -CF	REC3860086	REC3860079
5.7GIC-300-R	RM21399021	RM3885250
5.7GIC-300-J, -JF	REC21132390	RM3885250
5.7GIC-300-P, -300-R	RM21399021	RM3885250
5.7GICE-300-J, -JF, -M, -MF	REC21132390	RM3885250
5.7GICE-300-P, -300-R	RM21399021	RM3885250
5.7GI-A, -D, -DF	REC3860086	REC3860079
5.7GI-E, -EF	RM3586326	REC3860079
5.7GIE-300-J, -JF, -K, -KF, -M, -MF, -N	REC21132390	RM3885250
5.7GiE-300-P, -300-R	RM21399021	RM3885250

	SERPENTIN SERPENTINE SERPENTINA SERPENTIN	TENSOR TENSIONER TENDICINGHIA TENDEUR
5.7GI-F, -FF, -G, -GF	RM3889124	RM3885250
5.7GIL-A, -B, -C, -D	RM3861500	REC3860079
5.7GSIL-A	RM3861500	REC3860079
5.7GSIPEFS	REC3860086	REC3860079
5.7GXI-A, -B, -C, -CF, -D, -DF, -E, -EF	REC3860086	REC3860079
5.7GXI-320-R, GXIE-320-R	RM21399021	RM3885250
5.7GXIC-320-R, GXICE-320-R	RM21399021	RM3885250
5.7GXICE-J, -JF, -M, -MF	REC21132390	RM3885250
5.7GXIC-J, -JF	REC21132390	RM3885250
5.7GXICE-P	RM21399021	RM3885250
5.7GXIC-JF	REC21132390	RM3885250
5.7GXIC-P	RM21399021	RM3885250
5.7GXIE-J, -JF, -K, -KF, -M-MF, -N	REC21132390	RM3885250
5.7GXIE-P	RM21399021	RM3885250
5.7GXI-F, -FF	RM3586326	REC3860079
5.7GXI-G, -GF, -H, -HF	RM3889124	RM3885250
5.7GXI-J, -JF	REC21132390	RM3885250
5.7GXIL-A, -B, -C, -D, -E	RM3861500	REC3860079
5.7GXI-N	RM21399021	RM3885250
5.7GXI-P	REC21132390	RM3885250
5.7OSI-300-J, -JF	REC21132390	RM3885250
5.7OSI-A, -AF, -B, -BF, -C, -CF	REC3860086	REC3860079
5.7OSI-D, -DF	RM3586326	REC3860079
5.7OSI-G, -GF, -E, -EF	RM3889124	RM3885250
5.7OSXI-A, AF, B, -BF, -C, -CF	REC3860086	REC3860079
5.7OSXI-D, -DF	RM3586326	REC3860079
5.7OSXIE-J, -JF	REC21132390	RM3885250
5.7OSXI-E, -EF, -G, -GF	RM3889124	RM3885250
5.7SI-C, -CF	REC3860086	REC3860079
5.7OSIE-300-J, -JF	REC21132390	RM3885250
5.7SXI-B	REC3860086	REC3860079
5.7SXI-J, -JF	REC21132390	RM3885250
V8-225-C-A, -CE-A, -C-B, -CE-B	RM21399021	RM3885250
V8-270-A, B, -E, -A, -C-A, -CE, -A, -E, -B, -C, -B, -CE, -B	RM21399021	RM3885250
V8-300-A, B, -E, -A, -C-A, -CE, -A, -E, B, -C, -B, -CE, -B	RM21399021	RM3885250
V8-320-A, B, -E, -A, -C-A, -CE, -A, -E, -B, -C, -B, -CE, -B	RM21399021	RM3885250
8.1GIC-400-Q, -J, -JF	RM21132385	RM3885250
8.1GICE-400-J, -JF	RM21132385	RM3885250
8.1GICE-M, -MF, -P, -Q	RM21132385	RM3885250
8.1GIE-J, -JF, -K, -KF, -M, -MF, -P	RM21132385	RM3885250
8.1GI-A, -B, -BF, -H, -HF, -G, -GF	REC21132390	RM3885250
8.1GI-J, -JF	RM21132385	RM3885250
8.1GIL-H	RM3889127	RM3885250
8.1GSI-A	REC21132390	RM3885250
8.1GXIE-J, -JF, -K, -KF, -M, -MF, -P	RM21132385	RM3885250
8.1GXI-A, -AF, -G, -GF, -F, -FF	REC21132390	RM3885250
8.1GXI-J, -JF	RM21132385	RM3885250
8.1GXIL-G	RM3889127	RM3885250
8.1IPSCE-JF, -MF, -PF, -Q	RM3861501	RM3885250
8.1IPSE-JF	RM21132385	RM3885250
8.1OSI-C, -CF, -D, -DF	REC21132390	RM3885250
8.1OSIE-J, -JF	RM21132385	RM3885250
8.1OSI-J, -JF	RM21132385	RM3885250

GUÍA DE CORREAS SERPENTIN Y TENSORES — SERPENTINE BELTS & TENSIONERS GUIDE — GUIDA CINGHIA SERPENTINA E TENDICINCHIA MOTORE — GUIDE DES COURROIES SERPENTIN ET TENDEURS

	SERPENTIN SERPENTINE SERPENTINA SERPENTIN	TENSOR TENSIONER TENDICINGHIA TENDEUR	Ø RODILLO TENSOR TENSIONER ROLLER Ø Ø RULLO TENDICINGHIA Ø GALET TENDEUR
D3-110I-A	REC30731809	REC31251252	
D3-110I-B	REC30731809	REC31251252	
D3-110I-C	REC30731809	REC31251252	
D3-110I-D	REC30731809	REC31251252	
D3-130A-A	REC30731809	REC31251252	
D3-130A-B	REC30731809	REC31251252	
D3-130A-C	REC30731809	REC31251252	
D3-130I-A	REC30731809	REC31251252	
D3-130I-B	REC30731809	REC31251252	
D3-130I-C	REC30731809	REC31251252	
D3-140A-D	REC30731809	REC31251252	
D3-150I-D	REC30731809	REC31251252	
D3-160A-A	REC30731809	REC31251252	
D3-160A-B	REC30731809	REC31251252	
D3-160A-C	REC30731809	REC31251252	
D3-160I-A	REC30731809	REC31251252	
D3-160I-B	REC30731809	REC31251252	
D3-160I-C	REC30731809	REC31251252	
D3-170A-D	REC30731809	REC31251252	
D3-170I-D	REC30731809	REC31251252	
D3-190A-B	REC30731809	REC31251252	
D3-190A-C	REC30731809	REC31251252	
D3-190I-B	REC30731809	REC31251252	
D3-190I-C	REC30731809	REC31251252	
D3-200A-D	REC30731809	REC31251252	
D3-200I-D	REC30731809	REC31251252	
D3-220A-D	REC30731809	REC31251252	
D3-220I-D	REC30731809	REC31251252	
D4 (DH)	REC21407028	REC22774756	
D4	RM21405494	REC22774756	
D6 (DH)	REC21407028	REC22774756	

	SERPENTIN SERPENTINE SERPENTINA SERPENTIN	TENSOR TENSIONER TENDICINGHIA TENDEUR	Ø RODILLO TENSOR TENSIONER ROLLER Ø Ø RULLO TENDICINGHIA Ø GALET TENDEUR
D6	RM21405494	REC22774756	
KAD300	RM3582424	REC3582324	95 mm
KAD300A	RM3582424	REC3582324	95 mm
KAD32P-A	RM3582424	REC3582324	95 mm
KAD32P-A	REC861564	REC861563	
KAD43P-A	RM3582424	REC3582324	95 mm
KAD43P-A	REC861564	REC861563	
KAD44P-B	RM3582424	REC3582324	95 mm
KAD44P-B	REC861564	REC861563	
KAD44P-C	RM3582424	REC3582324	95 mm
KAD44P-C	REC861564	REC861563	
KAMD300	RM3582424	REC3582324	95 mm
KAMD300	REC861564	REC861563	
KAMD300-A	RM3582424	REC3582324	95 mm
KAMD300-A	REC861564	REC861563	
KAMD44P	RM3582424	REC3582324	95 mm
KAMD44P	REC861564	REC861563	
KAMD44P-A	RM3582424	REC3582324	95 mm
KAMD44P-A	REC861564	REC861563	
KAMD44P-B	RM3582424	REC3582324	95 mm
KAMD44P-B	REC861564	REC861563	
KAMD44P-C	RM3582424	REC3582324	95 mm
KAMD44P-C	REC861564	REC861563	
D9A2A MH/MP/MG (425/500/575)	REC1066823		
D9A2A MH/MP/ MG (425/500/575) SN7009156811+	REC982570		
D11A, B	REC982570		
D12D/C (-A, -B, -C, -D, -E, -F, -G, -H)	REC978217		

GUÍA DE CORREAS BOMBA AGUA — V-BELTS GUIDE WATER POMPE — GUIDA CINGHIA MOTORE POMPA ACQUA — GUIDE DES COURROIES DE POMPE D'EAU

	Alternador Alternator Alternatore Alternateur	Bomba agua Water pump Pompa acqua Pompe à eau	Distribución Camshaft Distribuzione Distribution	Bomba agua salada Sea water pump Pompa acqua salata Pompe eau de mer	Dirección asistida Power steering Servosterzo Direction assistée	REF	OEM	Piezas necesarias Required parts Parti necessarie Pièces nécessaires
AQ60F, 90, 95, 95A, 100, 105A, 110, 115, 115A, 115B, 120, 125, 130, 130A BB115, A	✓					REC966891	966891	
AQ120A, B AQ125A, B AQ140A, AQ145A	✓					REC966694	966694	
AQ130B, C, D	✓					REC966891	966891	
AQ131A, B, C, D	✓	✓				REC966382	966382	
			✓			REC463377	463377	
AQ145B	✓	✓				REC966382	966382	
			✓			REC463377	463377	
AQ151A, B, C 2.5L AQ152	✓	✓				REC966382	966382	
			✓			REC463377	463377	
AQ165A, B, C AQ170A, B, C	✓	✓				REC966694	966694	
AQ171A, C	✓	✓				REC966382	966382	
			✓			REC855506	855506	
AQ175A	✓	✓				REC978750	978750	
AQ200B,C AQ307 GM	✓	✓				REC978750	978750	
				✓		GDY17291	967158	2
AQ200D, F AQ225A, B, C, D, E, F	✓	✓				REC978750	978750	
				✓		GDY17291	967158	2
AQ205A					✓	REC967111	967111	
	✓	✓				REC978750	978750	
AQ211A AQ231A, B					✓	REC967111	967111	
	✓	✓				REC978750	978750	
AQ255A, B • AQ260A, B AQ271A, B, C, D • AQ280A • AQ290A AQ311A, B	✓	✓				REC978750	978750	
				✓		GDY17291	967158	2
230A, 250, 251	✓	✓				REC966382	966382	
			✓			REC463377	463377	

	Alternador Alternator Alternatore Alternateur	Bomba agua Water pump Pompa acqua Pompe à eau	Distribución Camshaft Distribuzione Distribution	Bomba agua salada Sea water pump Pompa acqua salata Pompe eau de mer	Dirección asistida Power steering Servosterzo Direction assistée	REF	OEM	Piezas necesarias Required parts Parti necessarie Pièces nécessaires
431					✓	REC967111	967111	
	✓	✓				REC978750	978750	
501A, B 570A 572A	✓	✓				REC978750	978750	
		✓			✓	REC967111	967111	
740A, B	✓	✓				RM967191	967191	
AQ271A, B, C, D AQ311A, B 5.7L (V-8 350)	✓	✓				REC978750	978750	
		✓			✓	REC967111	967111	
3.0GL - 3.0GS (MD, HU, LC, LK, BY, WT)	✓	✓				REC3850268	3850268	
	✓				✓	REC3853536	3853536	
3.0GLP-A 3.0GSP-A, P-B, P-C	✓				✓	REC3860092	3860092	
	✓					RM3860093	3860093	
					✓	REC3857835	3857835	
4.3 GL 4.3 GS		✓				REC3852106		
	✓				✓	REC3852464	3852464	
	✓					RM3852504	3852504	
4.3 Gi		✓				REC3852106		
	✓				✓	REC3852464	3852464	
5.0 FL		✓				GDY15382	3852348	
	✓				✓	REC3858462	3858462	
	✓					REC3852106	3852106	
5.0 Fi		✓				GDY15382	3852348	
	✓				✓	REC3858462	3858462	
					✓	REC3857835	3857835	
	✓					REC3852106		
5.0 GL, BY		✓				GDY15295	978457	
BY, PJX, WT, EF	✓				✓	REC3852464	3852464	
5.7 GL MD, HU, NC		✓				REC3852106	3852336	
BY, WT, EF	✓				✓	REC3852464	3852464	
7.4Gi, GL, Gsi (PNCA, PNCM)		✓				RM3850430	3850430	
7.4Gi, GL, Gsi (LK, BY, INCCE, PNCB)		✓				RM978454	978454	
7.4Gi, GL, Gsi (BY, WT, MD,HU, NC, LK)	✓					RM3854643	3854643	
	✓	✓			✓	RM3860087	3860087	
7.4 GL (MD, HU, NC, LK)	✓					RM3852607	3852607	
8.1 Gi, Gsi	✓	✓			✓	REC21132390	3861034	
8.2GL, Gsi	✓					RM3852607	3852607	
8.2GL, Gsi (LK, BY, WT)		✓				RM978454	978454	
	✓					RM3854643	3854643	
8.2GL, Gsi (PNCA, PNCM)		✓				RM3850430	3850430	
8.2 Gsi (EF)	✓	✓			✓	RM3860087	3860087	

		Alternador Alternator Alternatore Alternateur	Bomba agua Water pump Pompa acqua Pompe à eau	Circuito ref. cerrado Raw water cooling system Circuito refrig. chiuso Circuit reffroid. fermée	Dirección asistida Power steering Servosterzo Direction assistée	Compresor Compressor Compressore Compresseur	REF	OEM	Piezas necesarias Required parts Parti necessarie Pièces nécessaires
MD1 (-M011131)		✓	✓				REC57-96834Q	952141	
MD1 (M011131+)		✓	✓				REC966990	966990	2
MD1B MD2B AQDB		✓	✓				REC966990	966990	2
	35-1/2"	✓	✓				REC966906	966906	
	40-1/2"	✓	✓				REC3852106	966916	
MD2		✓ (-M06274)	✓ (-M06274)				REC966990	966990	2
		✓ (M06275+)	✓ (M06275+)				REC966914	966914	
		✓	✓				REC3852106	966906	
MD5A, B		✓	✓				REC966990	966698	
MD5C (-M030016)		✓	✓				REC966990	966698	
MD6A (M01234+)		✓	✓				REC3858462	966700	
		✓	✓				REC966931	966931	
MD6B MD7A		✓	✓				REC966933	966933	
MD7B		✓	✓				REC966707	966707	
MD11C MD11D	35-1/2"	✓					REC966906	966906	
	51"	✓	✓	✗			REC966990	966698	
	55"	✓	✓				REC966931	966931	
MD11C • MD11D		✓	✓	✓			REC966942	966942	
MD17C		✓	✓	✗			REC966383	966383	
MD17C		✓	✓	✓			GDY15545	966929	

		Alternador Alternator Alternatore Alternateur	Bomba agua Water pump Pompa acqua Pompe à eau	Circuito ref. cerrado Raw water cooling system Circuito refrig. chiuso Circuit reffroid. fermée	Dirección asistida Power steering Servosterzo Direction assistée	Compresor Compressor Compressore Compresseur	REF	OEM	Piezas necesarias Required parts Parti necessarie Pièces nécessaires
2001		✓					REC966903	966903	
2002 2003		✓					REC966900	966900	
2003T		✓					REC966906	966906	
MD21A		✓	✓				REC829207	829207	
MD21B		✓	✓				REC829207	829207	
MD22		✓	✓				RM966912	966912	
			✓				REC3580835	3580835	
D1-13, 20							RM3809625	3809625	
D1-30							RM3812159	3812159	
D2-40							RM21314684	21314684	
D2-55		✓					RM967114	967114	
D2-75		✓					RM3584086	3584086	
D3		✓					REC30731809	30731809	
					✓		REC22352491	22352491	
		✓					REC22283751	22283751	
			✓				REC21160912	21160912	
D4, 6		✓					RM21405494	3583729	
						✓	RM21407026	21407026	
D4 (300) D6 (400/435)						✓	REC21405493	21405493	
D8		✓					REC22954700	22954700	
MD2010A, B, C MD2020A, B, C		✓					RM973534	973534	
MD2030A, B, C		✓					REC978482	978482	
MD2040A, B, C		✓					RM967114	967114	
AQAD30A, 31A, 40A, 40B AQD40A, 41A MD30A, 31A, 40A		✓	✓				REC966978	966978	
AQAD32A MD32A		✓	✓		✓		REC966387	966387	
KAD32P-A						✓	RM3581460	3581460	
		✓	✓				REC861564	861564	
		✓					REC977542	977542	
KAD42						✓	REC860388	860388	
		✓	✓				REC976483	976483	
		✓					REC977542	977542	
AQAD41A		✓	✓				REC966978	966978	
MD70			✓				DAY17305	958481	
		✓					REC966906	966906	
MD100A			✓				GDY17291	9671587	
	29-1/4"		✓				GDY15335	966958	
	33-1/4"	✓					REC57-36356	966974	
MD100B		✓					REC57-36356	966974	
TAMD30A, 31A, 40A, 40B, 41A TMD30A, 31A, 40A, 40B, 40C, 41A		✓	✓				REC966978	966978	
TAMD61A		✓					RM967193	967193	2
TAMD63L-A, P-A							REC866653	866653	
TAMD70B, C, D, E, TMD70B,C							RM966953	966953	
TAMD71A		✓					RM967193	967193	2
TAMD74A-A, A-B, C-A, C-B, L-A, L-B, P-A, P-B							REC3827273	3827273	
TAMD73P-A, WJ-A TAMD74P-A							REC866653	866653	
TAMD102A		✓					GDY15386	966870	

PARTES DEL MOTOR
ENGINE PARTS
PARTI MOTORE
PIECES MOTEUR

JUNTAS PARA BASES GM Y FORD / MARINE GASKETS TO GM & FORD ENGINES / GUARNIZIONI PER MOTORI GM E FORD / JOINTS POUR MOTEURS GM ET FORD

Los Kits están diseñados y catalogados específicamente para aplicaciones marinas. Su calidad es superior a las juntas originales.

The gaskets kits are designed and cataloged specifically for marine engine applications. Their quality is even better than the oem's.

I kit di guarnizioni sono disegnati e fabbricati specificatamente per applicazioni marine. La qualità è assolutamente paragonabile a quelle originali.

Les kits sont spécifiquement conçus et catalogués pour les applications marines. Leur qualité est supérieure à celle des joints d'origine.

SERIE SERIAL				
1700-17099	KIT JUNTAS DE CULATA (pack individual)	CYLINDER HEAD GASKET (single-packed)	GUARNIZIONI TESTATA (quantità 1)	KIT JOINTS DE CULASSE (paquet individuel)
17100-17199	JUEGOS DE CONVERSIÓN Todas las juntas y retenes de aceite que no se encuentran en los juegos de culata. Incluye las juntas del cárter y los retenes.	CONVERSION KITS All gaskets and oil seals not found in a Head Set. This includes timing cover gaskets and seals, oil pan gaskets, and rear main bearing seals.	KIT PARTE BASSA Include tutte le guarnizioni ed i paraoli della parte bassa del motore, viene fornita anche la guarnizione della coppa dell'olio.	KITS DE CONVERSION Tous les joints d'étanchéité et joints d'huile qui ne sont pas contenus dans les kits de culasse. Comprend les joints de carter et les joints d'huile.
17200-17299	KIT DE DESCARBONIZACIÓN Todas las juntas y retenes necesarios para el trabajo de las válvulas, incluyendo la culata, la tapa de la válvula y juntas de colector de admisión y colector de escape. (Los juegos de 4 cyl no contienen las juntas del colector de admisión/ escape. Deben pedirse por separado).	HEAD SETS SERIES All gaskets and seals necessary for a valve griding job, including cylinder head gaskets, valve cover gaskets, intake & exhaust manifold gaskets (except 4 cyl intake set), and valve stem seals.	KIT PARTE ALTA (SMERIGLIO) Include tutte le guarnizioni ed i paraoli della parte alta del motore, testate, carter distribuzione, aspirazione e scarico. (Motori a 4 cyl. la guarnizione aspirazione è da ordinare separatamente).	KIT DE DÉCARBONISATION Tous les joints requis pour le travail sur les soupapes, y compris les joints de culasse, de couvercle de soupape, de collecteur d'admission et d'échappement (les kits 4 cylindres ne contiennent pas de joints de collecteur d'admission/échappement). Ils doivent être commandés séparément.
17300-17399	KIT DE COLECTOR DE ADMISIÓN Juntas de la parte de admisión del colector, retenes y juntas de la base del distribuidor.	INTAKE MANIFOLD SETS Intake manifold side gaskets, intake manifold end seals, and distributor mounting gasket.	KIT GUARNIZIONE ASPIRAZIONE Guarnizioni laterali del collettore di aspirazione, guarnizioni e guarnizioni della base del distributore.	KIT DE COLLECTEUR D'ADMISSION Joints de collecteur d'admission, joints d'étanchéité et joints de base de distributeur.
17400-17499	KIT DE COLECTOR DE ESCAPE (de colector a culata)	EXHAUST MANIFOLD (manifold-to-cylinder head gaskets)	KIT GUARNIZIONE SCARICO (dalla testata al collettore)	KIT COLLECTEUR D'ÉCHAPPEMENT (collecteur à la culasse)
17700-17749	KIT DE CONTRARROTACIÓN RETÉN TRASERO DEL CIGÜEÑAL Retenes traseros del cigüeñal diseñados para motores de rotación opuesta a la normal. (Retenes de rotación normal incluídos en el set de conversión)	REVERSE ROTATION REAR MAIN BEARING SEAL SETS Rear main bearing seals designed to seal a crankshaft which rotates in the opposite direction from normal (Standard rotation seal is included in conversion set)	PARAOLIO MOTORI CONTROROTANTI ALBERO MOTORE Nei motori rotazione STD il paraolio viene già incluso nel kit della parte bassa. (Guarnizioni a rotazione normale incluse nel set di conversione)	KIT CONTRE-ROTATION JOINTS D'HUILE DE VILEBREQUIN ARRIÈRE Joints de vilebrequin arrière conçus pour les moteurs à contre-rotation (joints à rotation normale inclus dans le kit de conversion).
17750-17799	KIT DE RETENES TAPA DEL CIGÜEÑAL DE CONTRARROTACIÓN Retenes de la tapa del cigüeñal diseñados para motores de rotación opuesta a la normal. (Retenes de rotación normal incluídos en el set de conversión).	REVERSE ROTATION TIMING COVER SEAL SETS SERIES Timing cover seals designed to seal crankshaft which rotates in the opposite direction from normal (standard rotation seal is included in Conversion set and Timing cover set)	PARAOLIO CARTER DISTRIBUZIONE CONTROTOTANTI Guarnizioni del coperchio dell'albero a gomiti progettate per motori controrotanti (le guarnizioni per la rotazione normale sono incluse nel set di conversione).	KIT DE JOINTS DE COUVERCLE DE VILEBREQUIN CONTRE-ROTATIF Joints de couvercle de vilebrequin conçus pour les moteurs à contre-rotation (joints à rotation normale inclus dans le kit de conversion).
17900-17949	KIT DE TAPA VÁLVULA Todas las juntas de las tapas de las válvulas para sellar el motor.	VALVE COVER SET SERIES All valve cover or push rod cover gaskets (and grommets if required) required to seal one engine.	KIT COPERCHIO PUNTERIE Tutte le guarnizioni del coperchio della valvola per sigillare il motore.	KIT DE COUVERCLE DE SOUPAPE Tous les joints de couvercle de soupape pour l'étanchéité du moteur.
17950-17999	KIT DE CÁRTER Todas las juntas y retenes del cárter de aceite, o la junta del cárter de aceite de goma moldeada de una pieza, necesarias para sellar un motor.	OIL PAN SETS SERIES All oil pan gaskets & seals, or one-piece molded rubber oil pan gasket, required to seal one engine.	GUARNIZIONE COPPA DELL'OLIO Tutte le guarnizioni e le tenute della coppa dell'olio, o la guarnizione in gomma stampata in un unico pezzo, necessarie per sigillare un motore.	KIT DE CARTER D'HUILE Tous les joints de carter d'huile, ou un joint de carter d'huile en caoutchouc moulé d'une seule pièce, nécessaires à l'étanchéité d'un moteur.

3.0 GS (135-150 HP), GL (135 HP), GXI (150 HP)

	REF	CULATA	CYLINDER HEAD	TESTATA	CULASSE
	REC17000	JUNTA CULATA	CYLINDER HEAD	GUARNIZIONE TESTATA	JOINT DE CULASSE
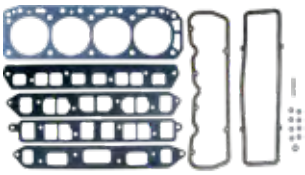	REC17200	KIT JUNTAS SUPERIOR	GASKET HEAD SET	KIT PARTE ALTA	KIT DE JOINTS SUPÉRIEURS

	REF	INFERIOR	CONVERSION	PARTE BASSA	CONVERSION
	REC17102	KIT JUNTAS Retén 1 pieza. Junta cárter 1 pieza.	GASKET SET 1 piece rear main bearing seal 1 piece oil pan gasket	KIT Paraolio in 1 pz. Guarnizione coppa dell'olio in 1 pz.	KIT JOINTS INFERIEURS Joint spi 1 pièce. Joint de carter 1 pièce.

	REF	COLECTOR ADMISIÓN-ESCAPE	MANIFOLD INTAKE & EXHAUST	ASPIRAZIONE-SCARICO	ADMISSION ET ÉCHAPPEMENT
	REC27-815528	Junta (6229718+) sólo 3.0 LX	Gasket (6229718+) only 3.0 LX	Guarnizione (6229718+) solo 3.0 LX	Joint (6229718+) 3.0 LX uniquement
	REF	TAPA VÁLVULAS	VALVE COVER	COPERCHIO VALVOLE	CACHE CULBUTEUR
	REC17900	Junta	Gasket	Guarnizione	Joint
	REF	TAPA EMPUJADORES	PUSH ROD COVER	COPERCHIO ASTE PUNTERIE	COUVERCLE
	REC17903	Junta	Gasket	Guarnizione	Joint

4.3 GI (205 HP); 4.3 GL (190 HP); 4.3 GS (205 HP); 4.3 GXI (225 HP)
430, 430 DP (155 HP)
431 (180 HP); 431 (205 HP)
432 DP (164 HP)
434 DP (187 HP)

	REF	CULATA	CYLINDER HEAD	TESTATA	CULASSE
	REC17010	Se necesitan dos	2 required	Necessarie 2	Deux sont nécessaires
	REC17210	Motor sin eje equilibrado. Incluye juntas tapa válvulas y retenes.	Engine without balance shaft. Valve cover gaskets and premium valve stem seals included.	Motore senza asse bilanciato. Include guarnizione coperchio punterie e paraoli valvole.	Moteur sans arbre d'équilibrage. Comprend les joints de cache culbuteur et les joints d'étanchéité.
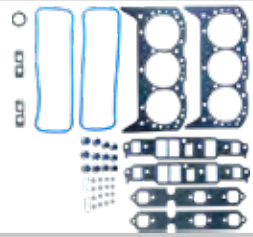	REC17211	Motor con eje equilibrado. Incluye juntas tapa válvulas y retenes.	Engine with balance shaft. Valve cover gaskets and premium valve stem seals included.	Motore con asse bilanciato. Include guarnizione coperchio punterie e paraoli valvole.	Moteur avec arbre d'équilibrage. Comprend les joints de cache culbuteur et les joints d'étanchéité.
	REF	INFERIOR	CONVERSION	PARTE BASSA	PARTIE BASSE
	REC17116	Retén de 1 pieza.	1 piece rear gasket.	Paraolio posteriore in 1 pz	joint spi 1 pièce
	REF	COLECTOR ADMISIÓN-ESCAPE	MANIFOLD INTAKE & EXHAUST	ASPIRAZIONE-SCARICO	ADMISSION ET ÉCHAPPEMENT
	REC17310	Junta Admisión-Escape	Intake-Exhaust Gasket	Guarnizione aspirazione	Joint d'admission et d'échappement
	REC824326002	Junta Admisión Vortec (2 unid.)	Intake Gasket Vortec (2 units)	guarnizione aspirazione Vortec (2 unità)	Joint d'admission Vortec (2 pièces)
	REC27-99757	Kit juntas colector - escape	Exhaust gasket set	Kit guarnizione scarico	Kit joints collecteur d'échappement

	REF	CARTER	OIL PAN	COPPA DELL'OLIO	CARTER D'HUILE
	REC17971	1 junta carter (Retén 1 pieza)	1 piece oil pan gasket (1 piece seal)	Guarnizione coppa in 1 pz (paraolio 1 pz)	1 joint de carter (Joint spi 1 pièce)
	REC27-142471	1 Junta Carter de goma (-2008)	1 rubber oil pan gasket (-2008)	Guarnizione 1 pz (-2008)	1 Joint de carter en caoutchouc (-2008)
	REC21124852	1 Junta Carter de goma (2008+)	1 rubber oil pan gasket (2008+)	Guarnizione 1 pz (2008+)	1 Joint de carter en caoutchouc (2008+)
	REF	TAPA VÁLVULAS	VALVE COVER	COPERCHIO VALVOLE	CACHE CULBUTEUR
	REC17920	Motor sin eje equilibrado.	Engine without balance shaft	Motore senza asse equilibrato.	Moteur sans arbre d'équilibrage.
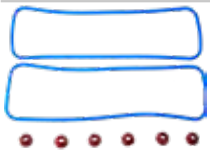	REC17921	Motor con eje equilibrado.	Engine with balance shaft	Motore con asse equilibrato.	Moteur avec arbre d'équilibrage

5.0 FI (220 HP); 5.0FL (190 HP)
215 (215 HP); 220 (220 HP); 225 (225 HP)
FORD

	REF	CULATA	CYLINDER HEAD	TESTATA	CULASSE
	FEL17060	Se necesitan dos	2 required	Necessarie 2	Deux sont nécessaires
	FEL17260	Incluye retenes de válvulas.	Premium valve stem seals included.	Include paraoli valvole.	Comprend les joints de queue de soupape.
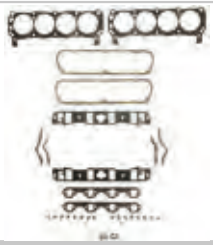	FEL17261	Con tapa válvulas de aluminio. Incluye retenes de válvulas.	With cast aluminum valve covers. Premium valve stem seals included.	Con coperchio punterie in alluminio. Inlcude paraolio valvole.	Avec le cache culbuteur en Aluminium. Comprend les joints de queue de soupape.
	REF	INFERIOR	CONVERSION	PARTE BASSA	PARTIE BASSE
	FEL17161	Retén 1 piezas, 1 pieza junta cárter. Incluye junta de cárter.	1 piece rear main bearing seal & 1 piece oil pan gasket. Rubber oil pan gasket included.	Paraolio in 1 pz, 1 pz guarnizione coppa dell'olio. Include guarnizione coppa.	Joint spi 1 pièce Joint de carter 1 pièce. Comprend le joint de carter.
	FEL17160	Retén 2 piezas, 4 piezas junta cárter.	2 piece rear main bearing seal & 4 piece oil pan gasket.	Paraolio in 2 pz, 4 pz guarnizione coppa dell'olio.	Joint spi 2 pièces Joint de carter 4 pièces.
	REF	COLECTOR ADMISIÓN-ESCAPE	MANIFOLD INTAKE & EXHAUST	ASPIRAZIONE-SCARICO	ADMISSION ET ÉCHAPPEMENT
	FEL17360	Kit junta admisión	Intake gasket set	Kit guarnizioni aspirazione	Kit joints d'admission
	REC3852455	Junta escape	Exhaust gasket	Guarnizione scarico	Joints collecteur d'échappement

	REF	CARTER	OIL PAN	COPPA DELL'OLIO	CARTER D'HUILE
	FEL17995	Retén 2 piezas	2 pieces seal	Paraolio 2 pz	Joint spi 2 pièces
	FEL17997	1 pieza junta de goma.	1 piece oil pan gasket	Guarnizione 1 pz	1 Joint de carter de caoutchouc.
	REF	TAPA VÁLVULAS	VALVE COVER	COPERCHIO VALVOLE	CACHE CULBUTEUR
	FEL17945	Con tapa de válvulas de acero	With iron valve cover	Con coperchio valvole in aciaio	Cache culbuteur en acier
	FEL17946	Con tapa válvulas de aluminio.	With cast aluminium valve covers.	Con coperchio valvole in alluminio.	Cache culbuteur en Aluminium

5.0GXI (270HP)
AQ200 (200 HP); AQ211 (210 HP); AQ225 (225 HP); AQ231 (229 HP)
BB225 (225HP); BB231 (229 HP)
500 DP (187 HP); 500 DP (190 HP)
501, 501 DP (204 HP); 501, 501 DP (205 HP)

	REF		CULATA	CYLINDER HEAD	TESTATA	CULASSE
	REC17020	3853380	Se necesitan dos	2 required	Ne servono 2	2 sont nécessaires
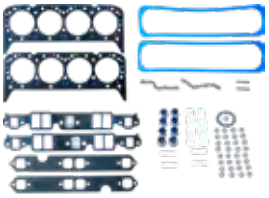	REC17224		Tornillo centro tapa válvulas. Incluye retenes válvulas.	With center bolt desing valve covers. Premium valve stem seals included.	Viti coperchio punterie al centro. Include paraoli valvole.	Cache culbuteur avec les vis centrales. Comprend les joints de queue de soupapes.
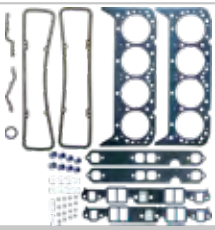	REC17220		Tornillo en el lateral tapa válvulas. Incluye retenes válvulas.	Rim bolt desing valve covers. Premium valve stem seals included.	Viti coperchio punterie nel perimetro. Include paraoli valvole.	Cache culbuteur avec les vis laterales. Comprend les joints de queue de soupapes.
	REF		INFERIOR	CONVERSION	PARTE BASSA	PARTIE BASSE
	REC17125		Retén de 1 pieza y junta cárter de 1 pieza Incluye junta de cárter.	One-piece rear main bearing seal & 1 piece oil pan gasket. Oil pan gasket included.	Paraolio in 1 peze e guarnizone coppa in 1 peze. Include paraolio coppa.	Joint spi 1 pièce. Joint de carter 1 pièce. Comprend le Joint spi.
	REC17120		Retén de 2 piezas y junta cárter de 4 piezas	Two-piece rear main bearing seal & 4 pieces oil pan gasket.	Paraolio in 2 peze e guarnizione coppa in 4 pezi.	Joint spi 2 pièces et joint de carter 4 pièces.
	REF		COLECTOR ADMISIÓN-ESCAPE	MANIFOLD INTAKE & EXHAUST	ASPIRAZIONE-SCARICO	ADMISSION ET ÉCHAPPEMENT
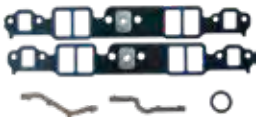	REC17320	856365	Kit junta admisión-escape.	Intake-exhaust gasket set.	Kit guarnizioni aspirazione - scarico.	Kit joints d'admission.

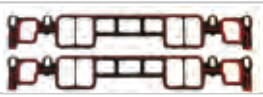	REC27-807473A1	3857662	JUNTA ADMISIÓN Vortec (2 unid.) Junta de plástico.	INTAKE GASKET Vortec (2 units). Gasket in plastic.	GUARNIZIONE ASPIRAZIONE Vortec necessita 2 pz. Guarnizione in plastica	JOINT ADMISSION Vortec (2 unités). Joint en plastique.
	REC27-33395	856034	Kit juntas colector escape	Oil pan - exhaust gasket set.	Kit guarnizione Coppa olio - scarico.	Kit joints collecteur d'échappement.
	REF		CARTER	OIL PAN	COPPA DELL'OLIO	CARTER D'HUILE
	REC17982	3856138	Junta cárter 1 pieza. Junta de cárter incluida.	1 piece oil pan gasket. Molded rubber oil pan gasket included.	Guarnizione in 1 pz. Guarnizione coppa included.	Joint de carter 1 pièce.
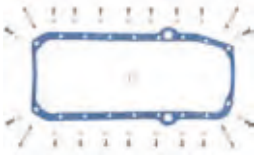	FEL17983		Junta 1 pieza. Para motores con retén trasero de 2 piezas.	1 piece molded rubber gasket for engines with Two-piece rear main bearing sea.	Guarnizione in 1 pz, paraolio posteriore in 2 px.	Joint de carter 1 pièce pour moteurs avec Joint spi arrière 2 pièces.
	REC17980	855729	Varilla aceite de BABOR con retén trasero de 2 piezas y junta cárter de 4 piezas.	PORT dipstick with 2-piece rear main bearing seal & 4-piece oil pan gasket.	Asticella olio a SINISTRO con paraolio posteriore in 2 pz. e guarnizione coppa da 4 pz.	Jauge d'huile à BABORD avec Joint spi arrière en 2 pièces et joint de carter en 4 pièces.
	REC17981		Varilla aceite de ESTRIBOR con retén trasero de 2 piezas y junta cárter de 4 piezas.	STARBOARD dipstick with 2-piece rear main bearing seal & 4-piece oil pan gasket	Asticella olio DESTRO con paraolio posteriore in 2 pz e guarnizione coppa da 4 pz.	Jauge d'huile à TRIBORD avec Joint spi arrière en 2 pièces et joint de carter en 4 pièces.
	REF		RETÉN TRASERO CIGÜEÑAL	Crankshaft rear seal	PARAOLIO POSTERIORE ALBERO MOTORE	JOINT AIRRÈRE DE VILEBREQUIN
	FEL17725		Retén partido. Contrarrotación. De goma; dos piezas.	Split seal Rev. rotation, rubber; two-piece	Controrotazione in 2 pz. in gomma.	Joint contre-rotation en 2 pièces, en caoutchouc.
	REF		TAPA VÁLVULAS	VALVE COVER	COPERCHIO VALVOLE	COUVERCLE SOUPAPE
	REC17931	3852687	Tornillo centro tapa válvulas con juntas.	Molded rubber gaskets incl.	Coperchio punterie con viti centrali.	Fixation par vis centrale
	REC17930	835096	Tornillo en el canto.	Rim bolt desing	Coperchio punterie con viti nel perimetro.	Fixation par 4 vis latérales.
	REF		RETÉN DISTRIBUCIÓN	OIL SEAL TIMING COVER	PARAOLIO DISTRIBUZIONE	JOINT SPI DE DISTRIBUTION
	REC3853341	3853341	Reten contrarotación. Motor sin tapa distribución de plástico.	Reverse rotation oil seal. Engines without plastic timing cover.	Paraolio controrotante. Motore senza carter distribuzione in plastica.	Joint contre rotation pour moteur sans carter de distribution en plastique.

AQ260 (260 HP); AQ271 (270 HP); AQ271 (275 HP); AQ290 (290 HP); AQ311 (307 HP); BB260, BB261 (260 HP); 5.7 GI (250 HP); 5.7 GL (215 HP), GXI (320HP); 570, 570 DP (245 HP); 571 (273 HP); 572 (225HP)

	REF		CULATA	CYLINDER HEAD	TESTATA	CULASSE
	REC17030	3853380	Se necesitan dos	2 required	Ne servono 2	2 sont nécessaries
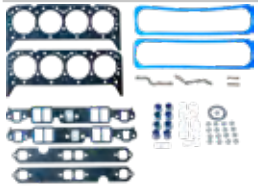	REC17214		Tornillo centro tapa válvulas. Incluye retenes válvulas.	With center bolt desing valve covers. Premium valve stem seals included.	Viti coperchio punterie al centro. Include paraoli valvole.	Cache culbuteur avec les vis centrales. Comprend les joints de queue de soupapes.
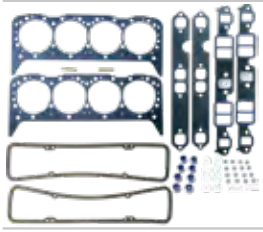	REC17230		Tornillo en el lateral tapa válvulas. Incluye retenes válvulas.	Rim bolt desing valve covers. Premium valve stem seals included.	Viti coperchio punterie nel perimetro. Include paraoli valvole.	Cache culbuteur avec les vis laterales. Comprend les joints de queue de soupapes.

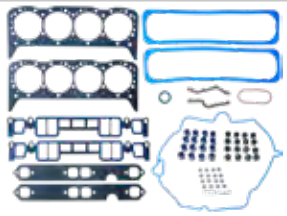	REC17232	Juntas del colector admisión de plástico. Retenes válvulas incluidos. VORTEC	Gasket head set whith plastic intake manifold gaskets. Premium valve stem. Seals incl. VORTEC	Kit con guarnizione aspirazione in plastica. Paraoli valvole inclusi. VORTEC	Kit joint collecteur aspiraration de plastique. Comprend les joints de queue de soupapes. VORTEC
	REF	INFERIOR	CONVERSION	PARTE BASSA	CONVERSION
	REC17125	Retén de 1 pieza y junta cárter de 1 pieza Incluye junta de cárter.	One-piece rear main bearing seal & 1 piece oil pan gasket. Oil pan gasket included.	Paraolio in 1 peze e guarnizone coppa in 1 peze. Include paraolio coppa.	Joint spi 1 pièce. Joint de carter 1 pièce. Comprend le Joint spi.
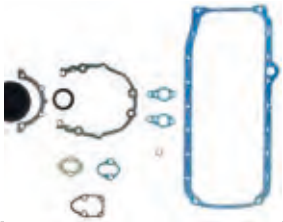	FEL17124	Con tapa de distribución de plástico, retén de 1 pieza y junta cárter de 1 pieza.	Engine with plastic timing cover, with 1 piece bearing seal & 1 piece oil pan gasket.	Cárter distribuzione in plastica, paraolio in 1 pz e guarnizone coppa olio in 1 pz.	Pour carter de distribution en plastique, joint arrière monobloc et joint de carter monobloc. Joint de carter inclus.
	REC17120	Retén de 2 piezas y junta cárter de 4 piezas	Two-piece rear main bearing seal & 4 pieces oil pan gasket.	Paraolio in 2 peze e guarnizione coppa in 4 pezi.	Joint spi 2 pièces et joint de carter 4 pièces.
	REF	COLECTOR ADMISIÓN-ESCAPE	MANIFOLD INTAKE & EXHAUST	ASPIRAZIONE-SCARICO	ADMISSION ET ÉCHAPPEMENT
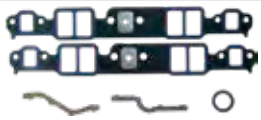	REC17320	Kit Juntas Admisión-Escape	Intake-Exhaust Gasket Set	Kit guarnizioni aspirazione - SCARICO	Kit joints d'admission
	REC27-807473A1 3857662	JUNTA ADMISIÓN Vortec (2 unid.) Junta de plástico.	INTAKE GASKET Vortec (2 units) Gasket in plastic.	GUARNIZIONE Vortec necessita 2 pz guarnizione in plastica	JOINT ADMISSION Vortec (2 pièces). Joint en plastique.
	REC27-33395	Kit juntas colector -escape	Oil pan - Exhaust gasket set	Kit guarnizione coppa olio - SCARICO	Kit joints collecteur-d'échappement
	REF	CARTER	OIL PAN	COPPA DELL'OLIO	CARTER D'HUILE
	REC17982	Junta cárter 1 pieza. Incluye Junta de cárter.	1 piece oil pan gasket. Molded rubber oil pan gasket included.	Guarnizione in 1 pz. Include guarnizione coppa.	Joint de carter 1 pièce. Comprend joint de carter.
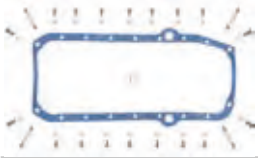	FEL17983	1 pieza junta para motores con retén trasero de 2 piezas.	1 piece molded rubber gasket for engines with 2-piece rear main bearing seal.	Guarnizione in 1 pz, paraolio posteriore in 2 px.	Joint 1 pièce pour moteurs avec Joint spi arrière 2 pièces.
	REC17980 855729	Varilla aceite de BABOR con retén trasero de 2 piezas y junta cárter de 4 piezas.	PORT dipstick with 2-piece rear main bearing seal & 4-piece oil pan gasket.	Asticella olio a SINISTRO con paraolio posteriore in 2 pz. e guarnizione coppa da 4 pz.	Jauge d'huile à BABORD avec Joint spi arrière en 2 pièces et joint de carter en 4 pièces.
	REC17981	Varilla aceite de ESTRIBOR con retén trasero de 2 piezas y junta cárter de 4 piezas.	STARBOARD dipstick with 2-piece rear main bearing seal & 4-piece oil pan gasket	Asticella olio DESTRO con paraolio posteriore in 2 pz e guarnizione coppa da 4 pz.	Jauge d'huile à TRIBORD avec Joint spi arrière en 2 pièces et joint de carter en 4 pièces.
	REF	RETÉN TRASERO CIGÜEÑAL	Crankshaft rear seal	PARAOLIO POSTERIORE ALBERO MOTORE	JOINT AIRRÈRE DE VILEBREQUIN
	FEL17725	Retén partido. Contrarrotación. De goma; dos piezas.	Split seal Rev. rotation, rubber; two-piece	Controrotazione in 2 pz. in gomma.	Joint en caoutchouc en 2 pièces pour moteur en contre rotation.

	REF		TAPA VÁLVULAS	VALVE COVER	COPERCHIO VALVOLE	CACHE CULBUTEUR
	REC17931	3852687	Tornillo centro tapa válvulas con juntas.	Molded rubber gaskets incl.	Coperchio punterie con viti centrali.	Cache culbuteur avec vis centrales.
	REC17930	835096	Tornillo en el canto.	Rim bolt desing	Coperchio punterie con viti nel perimetro.	Cache culbuteur avec vis latérales.

	REF		RETÉN DISTRIBUCIÓN	OIL SEAL TIMING COVER	PARAOLIO DISTRIBUZIONE	JOINT SPI DE DISTRIBUTION
	REC3853341	3853341	Reten contrarotación. Motor sin tapa distribución de plástico.	Reverse rotation oil seal. Engines without plastic timing cover.	Paraolio controrotante. Motore senza carter distribuzione in plastica.	Joint contre rotation pour moteur sans carter de distribution en plastique.

5.8 FL (235 HP); 5.8 FSI (265 HP); 240 (240 HP)

	REF	CULATA	CYLINDER HEAD	TESTATA	CULASSE
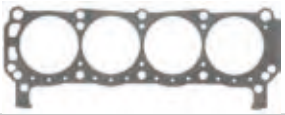	FEL17060	Se necesitan dos.	2 required.	Ne servono 2.	2 sont nécessaries.
	FEL17260	Con retenes valvula.	Premium valve stem.	Include paraolio valvole.	Comprend les joints de queue de soupapes.
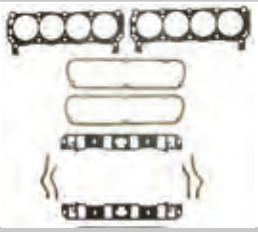	FEL17261	Con tapa válvulas de aluminio. Incluye retenes de válvulas.	With cast aluminum valve covers. Premium valve stem seals included.	Con coperchio punterie in alluminio. Inlcude paraolio valvole.	Avec le cache culbuteur en Aluminium. Comprend les joints de queue de soupape.

	REF	INFERIOR	CONVERSION	PARTE BASSA	PARTIE BASSE
	FEL17166	Retén 1 pieza, 1 pieza junta cárter.	1 piece rear main bearing seal & 1 piece oil pan gasket	Paraolio in 1 pz, 1 pz guarnizione coppa dell'olio.	Joint spi 1 pièce et joint de carter 1 pièce.
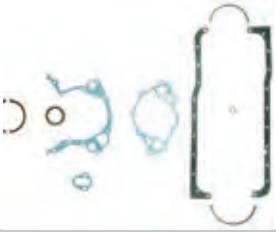	FEL17165	Retén 2 piezas, 4 piezas junta cárter.	2 piece rear main bearing seal & 4 piece oil pan gasket,	Paraolio in 2 pz, 4 pz guarnizione coppa dell'olio.	Joint spi 2 pièces et joint de carter 4 pièces.

	REF		COLECTOR ADMISIÓN-ESCAPE	MANIFOLD INTAKE & EXHAUST	ASPIRAZIONE-SCARICO	ADMISSION ET ÉCHAPPEMENT
	FEL17360		Kit Juntas Admisión.	Intake gasket set.	Kit guarnizioni aspirazione -.	Kit joints admission
	REC3852455	3852455	Junta escape.	Exhaust gasket.	Guarnizione scarico.	Joints de collecteur d'échappement.

	REF	CARTER	OIL PAN	COPPA DELL'OLIO	CARTER D'HUILE
	FEL17996	Cárter 4 piezas.	4 piece oil pan gasket.	4 pz coppa.	Joint de carter en 4 pièces.
	FEL17998	Cárter 1 pieza	Oil Pan 1 piece	1 pz. coppa.	Joint en 1 pièce.

	REF	TAPA VÁLVULAS	VALVE COVER	COPERCHIO VALVOLE	CACHE CULBUTEUR
	FEL17945	Con tapa de válvulas de acero	With iron valve cover	Con coperchio valvole in aciaio	Cache culbuteur en acier
	FEL17946	Con tapa válvulas de aluminio.	With cast aluminium valve covers.	Con coperchio valvole in alluminio.	Cache culbuteur en Aluminium

7.4 GI (330 HP GEN. V); 7.4 GL (300 HP GEN. V); 7.4 GSI (385 HP GEN. V) 740 (300 HP GEN. IV); 740 DP (300 HP GEN. IV); 740 DP (300 HP GEN. V)

	REF		CULATA	CYLINDER HEAD	TESTATA	CULASSE
	REC17040	856575	Gen IV exc. H.O. Se necesitan dos	Gen IV exc. H.O. 2 required	Gen IV escluso H.O. Necessarie 2	Gen IV exc. H.O. Deux sont nécessaires.
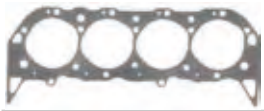	REC17042	3853511	Gen IV & V. Se necesitan 2.	Gen IV & V. 2 required	Gen IV e V. Necessarie 2	Gen IV et V. Deux sont nécessaires.
	REC17240		Gen IV exc. H.O. con admisión ovalada. Se incluye retenes de válvula.	Gen IV exc. H.O. with oval intake ports. Premium valve stem seals included.	Gen IV escluso H.O. con aspirazione ovale. Inclusi paraoli valvole.	Gen IV exc. H.O. avec admission ovale. Joints de queue de soupape inclus.
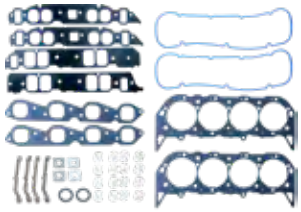	REC17242		Gen V EFI y H.O. Se incluye retenes de válvula. Gen VI. EFI y H.O. juntas de goma de tapa válvulas y retenes incluídos	Gen V. EFI or H.O. ; premium valve stem seals incl. Gen VI, EFI & H.O. molded rubber valve cover gaskets and premium valve stem seals incl.	Gen V EFI e H.O. Include paraoli valvole. Gen VI, EFI e H.O., guarnizione coperchio punterie e paraoli inclusi.	Gen V EFI et H.O. Joint de soupape inclus. Gen VI. EFI et H.O. joints de couvre-soupapes et joints en caoutchouc inclus.
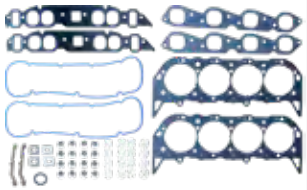	REC17243		Gen V & VI solo H.O. con admisión rectangular, juntas tapa válvulas y retenes incluídos.	Gen V & VI, H.O. only, with rectangular intake ports valve cover gaskes and premium valve stem seals incl.	Gen V e VI solo H.O. con aspirazione rettangolare, guarnizione coperchio punterie e paraoli inclusi.	Gen V et VI H.O. uniquement avec admission rectangulaire, joints de cache culbuteur et joints de queue de soupape inclus.
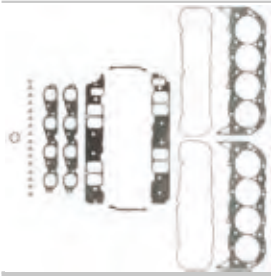	FEL17205		Gen VI sólo EFI Juntas de tapa válvulas y retenes incluídos.	Gen VI, EFI only, valve cover gaskets and premium valve stem seals incl.	Gen VI, solo EFI guarnizione rettangolare, guarnizione coperchio punterie e paraoli inclusi.	Gen V EFI uniquement. Joints de cache culbuteur et joints de queue de soupape inclus.
	REF		INFERIOR	CONVERSION	PARTE BASSA	PARTIE BASSE
	REC17140		Gen IV con retén trasero de dos piezas y junta cárter de 4 piezas.	Gen IV with two piece rear main bearing seal & four piece oil pan gasket.	Gen IV con paraolio posteriore in 2 pz. e guarnizione coppa dell'olio in 4 pz.	Gen V avec joint arrière en 2 parties et joint de carter en 4 parties.

	FEL17145		Gen V con retén trasero de una pieza y junta cárter de 1 pieza. Junta cárter incluída.	Gee V with one piece rear main bearing seal & one piece oil pan gasket. Oil pan gasket included.	Gene V con paraolio posteriore in 1 pz. e guarnizione coppa dell'olio in 1 pz.	Gen V avec joint arrière en 1 pièce et joint de carter en 1 pièce. Joint de carter inclus.
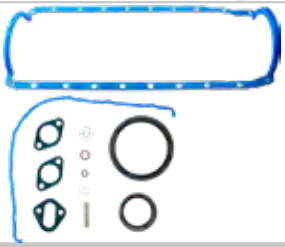	REC17146		Gen VI con retén trase-ro de una pieza y junta cárter de 1 pieza. Junta cárter incluída.	Gen VI with one piece rear main bearing seal & one piece oil pan gasket. oil pan gasket. incl.	Gen VI con paraolio posteriore in 1 pz. e guarnizione coppa dell'olio in gomma in 1 pz.	Gen VI avec joint à lèvre arrière en une seule pièce et joint de carter en 1 pièce. Joint de carter inclus.
	REF		COLECTOR ADMISIÓN-ESCAPE	MANIFOLD INTAKE & EXHAUST	ASPIRAZIONE-SCARICO	ADMISSION ET ÉCHAPPEMENT
	REC17341		Gen IV, V y VI sólo H.O. con admisión rectangular. Gene IV, excl. H.O. con admisión rectangular.	Gen IV, V & VI, H.O. only with rectangular intake ports. Gen IV excl. H.O. with rect. intake ports.	Gen IV, V e VI solo H.O. con aspirazione rettangolare. Gen IV escluso H.O. con aspirazione rettangolare.	Gen IV, V et VI uniquement H.O: avec admission rectangulaire. Gen IV, exc. H.O. avec admission rectangularie.
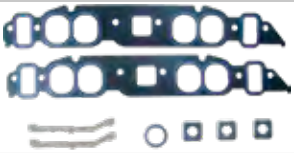	REC17340	856616	Gen IV,excl. H.O. con admisión oval. Gen V y VI y H.O. con admisión ovalada.	Gen IV excl. H.O. with oval intake ports. Gen V & VI, & H.O. with oval intake ports.	Gen IV escluso H.O. con aspirazione ovale. Gen V e VI e H.O. con aspirazione ovale.	Gen IV, exc. H.O. avec admission ovale. Gen V, VI et H.O. avec admission ovale.
	REC27-46820	3852472	KIT JUNTA ESCAPE Gen IV, V y VI.	EXHAUST GASKET SET Gen IV, V & VI	KIT GUARNIZIONI SCARICO Gen IV, V e VI	KIT JOINTS D'ÉCHAPPEMENT Gen IV, V et VI.
	REF		CARTER	OIL PAN	COPPA DELL'OLIO	CARTER D'HUILE
	FEL17985	856889	Gen IV, 4 piezas.	Gen IV, 4 pieces gasket.	GEN IV, 4 pz.	Gen IV, 4 pièces.
	FEL17986	3853510	Gen V & VI 1 pieza, incluye junta de goma.	Gen V & VI 1 piece oil pan gasket. Rubber gasket included.	Gen V & VI 1 pz, guarnizione in gomma inclusa.	Gen V et VI 1 pièce. Comprend joint en caoutchouc.
	REF		RETÉN TRASERO CIGÜEÑAL	Crankshaft rear seal	PARAOLIO POSTERIORE ALBERO MOTORE	JOINT SPI ARRIERE DE VILEBREQUIN
	REC26-14756		Gen IV. Retén Contrarrotación dos pieza.	Gen IV. Reverse rotation oil seal Two- pieces	Gen IV. Controrotante in 2 pz.	Gen IV. Joint spi contre-rotatif en 2 parties.
	REF		TAPA VÁLVULAS	VALVE COVER	COPERCHIO VALVOLE	CACHE CULBUTEUR
	REC17935	856626	Gen IV	Gen IV	Gen IV	Gen IV
	REC17937	3853513	Gen V & VI	Gen V & VI	Gen V e VI	Gen V et VI

820 DPX (385 HP GEN. V)

	REF		CULATA	CYLINDER HEAD	TESTATA	CULASSE
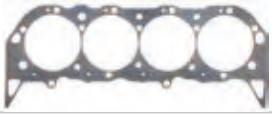	FEL17049		Gen IV sólo H.O. super medida. Se necesitan 2.	Gen IV H.O. only super bore 2 required	Gen IV solo H.O. maggiorata. Necessarie 2	Gen IV seulement H.O. super taille. 2 sont nécessaires.
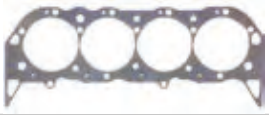	REC17048	3853587	Gen IV, V & VI. Se necesitan 2.	Gen IV, V & VI. 2 required	Gen IV, V e VI. Necessita 2	Gen IV, V et VI. 2 sont nécessaires.

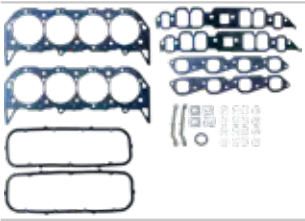	REC17248	Gen IV. Se incluye retenes de válvula y juntas tapa válvulas.	Gen IV. Premium valve stem seals & valve cover gasktes included.	Gen IV. Include paraolio e guarnizione del coperchio valvola	Gen IV. Les joints de cache culbuteur et de queue de soupape sont inclus.
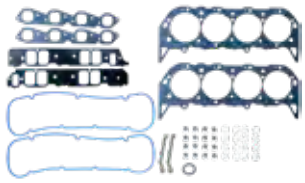	REC17207	Gen V & VI solo EFI. Se incluye retenes de válvula y juntas tapa válvulas.	Gen V & VI EFI only. Premium valve stem seals & valve cover gaskets included.	Gen V e VI solo EFI. Include paraolio e guarnizione del coperchio valvola	Gen V & VI EFI uniquement. Les joints de cache culbuteur et de queue de soupape sont inclus.
	REF	INFERIOR	CONVERSION	PARTE BASSA	PARTIE BASSE
	FEL17145	Gen V con retén trasero de una pieza y junta cárter de 1 pieza. Junta cárter incluída.	Gene V with one piece rear main bearing seal & one piece oil pan gasket. Oil pan gasket. incl.	Gen V con paraolio posteriore in 1 pz. e guarnizione coppa dell'olio in 1 pz. Include guarnizione coppa.	Gen V avec joint arrière en 2 parties et joint de carter en 4 parties. Joint de carter inclus.
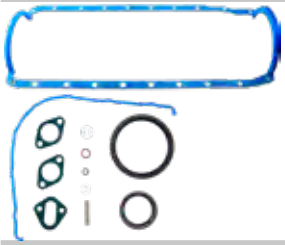	REC17146	Gen VI con retén trasero de una pieza y junta cárter de 1 pieza. Junta cárter incluída.	Gen VI with one piece rear main bearing seal & one piece oil pan gasket. Oil pan gasket. incl.	Gen VI con paraolio posteriore in 1 pz. e guarnizione coppa dell'olio in gomma in 1 pz. Include guarnizione coppa.	Gen VI avec joint arrière en 1 pièce et joint de carter en 1 pièce. Joint de carter inclus.
	REF	COLECTOR ADMISIÓN-ESCAPE	MANIFOLD INTAKE & EXHAUST	COLLETTORE ASPIRAZIONE-SCARICO	ADMISSION ET ÉCHAPPEMENT
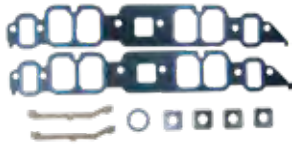	REC17341	Gen IV, V y VI sólo H.O. con admisión rectangular. Gene IV, excl. H.O. con admisión rectangular.	Gen IV, V & VI, H.O. only with rectangular intake ports. Gen IV excl. H.O. with rect. intake ports.	Gen IV, V e VI solo H.O. con aspirazione rettangolare. Gen IV escluso H.O. con aspirazione rettangolare.	Gen IV, V et VI uniquement H.O: avec admission rectangulaire. Gen IV, exc. H.O. avec admission rectangularie.
	REC17342	JUNTA ADMISIÓN Gen V & VI sólo EFI.	INTAKE GASKET Gen V & VI only EFI.	GUARNIZIONE ASPIRAZIONE Gen V & VI solo EFI.	Joint d'admission Gen V et VI uniquement EFI.
	REC27-46820 3852472	JUNTAS ESCAPE Gen IV, V & VI	EXHAUST GASKET Gen IV, V & VI	GUARNIZIONE SCARICO Gen IV, V & VI	Joints de collecteur d'échappement Gen IV, V et VI.
	REF	CARTER	OIL PAN	COPPA DELL'OLIO	CARTER D'HUILE
	FEL17986 3853510	Gen V & VI 1 pieza, incluye junta de goma.	Gen V & VI 1 piece oil pan gasket. Rubber gasket included.	Gen V & VI 1 pz, guarnizione in gomma inclusa.	Gen V et VI 1 pièce. Comprend joint en caoutchouc.
	REF	RETÉN TRASERO CIGÜEÑAL	Crankshaft rear seal	PARAOLIO POSTERIORE ALBERO MOTORE	JOINT SPI ARRIERE DE VILEBREQUIN
	REC26-14756	Gen IV. Retén Contrarrotación dos pieza.	Gen IV. Reverse rotation oil seal Two- pieces	Gen IV. Controrotante in 2 pz.	Gen IV. Joint spi contre-rotatif en 2 parties.
	REF	TAPA VÁLVULAS	VALVE COVER	COPERCHIO VALVOLE	CACHE CULBUTEUR
	REC17935	Gen IV	Gen IV	Gen IV	Gen IV
	REC17937	Gen V & VI	Gen V & VI	Gen V e VI	Gen V et VI

JUNTAS MOTOR — ENGINE GASKETS — GUARNIZIONE MOTORE — JOINTS MOTEUR

MOTORES GASOLINA BASE VOLVO — GAS ENGINE VOLVO BASE — MOTORI BENZINA BASE VOLVO — MOTEUR ESSENCE BASE VOLVO

GAS

JUNTAS CULATA — CYLINDER HEAD GASKETS — GUARNIZIONE TESTATA — JOINTS DE CULASSE

REF	OEM		KIT
REC1378645	31378645 463412	AQ120B, 125A, 140A B21 BB140A	REC876300



REF	OEM		KIT
REC1378646	1378646 1326785 1332644	AQ125B AQ131A, B, C, D AQ145A, B AQ151A, B, C AQ171A, C 230A, B 250A, B 251A	REC876301 REC876302 REC876303



REF	OEM		GRUESO THICKNESS SPESSORE EPAISSEUR
REC419310	419310 419763	AQ115A AQ130A, C, MB20B, B 20 Agujeros ovalados Oval holes Fori ovali Trous ovales	0,8 mm



REF	OEM		GRUESO THICKNESS SPESSORE EPAISSEUR
REC857621	857621 876783 875543 419628	AQ115A AQ30B, MB20A, B 20 Agujeros redondo Round holes Fori rotondi Trous ronds	2.0 mm



REF	OEM		GRUESO THICKNESS SPESSORE EPAISSEUR	KIT
REC9139282	9139282 462623	AQ115B AQ130D MB20, C, B 20 Agujeros ovalados Oval holes Fori ovali Trous ovales	1,2 mm	REC876358



REF	OEM		GRUESO THICKNESS SPESSORE EPAISSEUR	KIT
REC9139284	913928 3855409 461056 430107 461618	AQ165 AQ170A, B, C, B 30 Agujeros ovalados Oval holes Fori ovali Trous ovales	0,8 mm	REC876337



KIT JUNTAS SUPERIOR — GASKET HEAD SETS — KIT GUARNIZIONI PARTE ALTA — POCHETTE HAUTE

REF	OEM		GRUESO THICKNESS SPESSORE EPAISSEUR
REC876356	876356	AQ115A AQ130A, C MB20B Agujeros ovalados Oval holes Fori ovali Trous ovales	0,8 mm

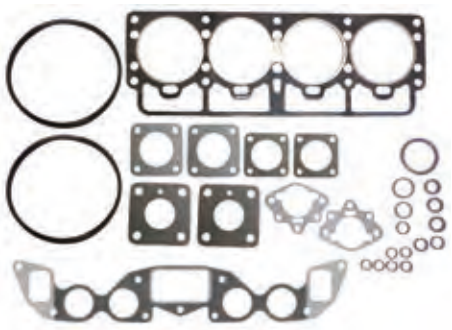

REF	OEM	
REC876337	876337 876335 875402 875533	AQ165A AQ170A, B BB165A BB170A, B

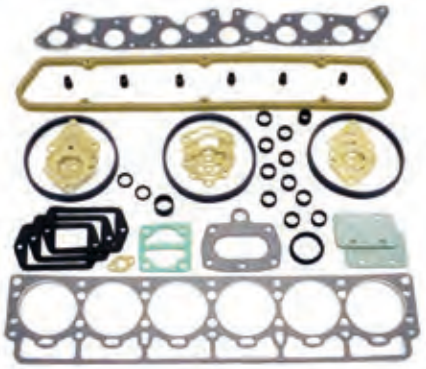

REF	OEM		GRUESO THICKNESS SPESSORE ÉPAISSEUR
REC876358	876358 875569	AQ115B AQ130D MB20C BB115C Agujeros ovalados Oval holes Fori ovali Trous ovales	1,2 mm

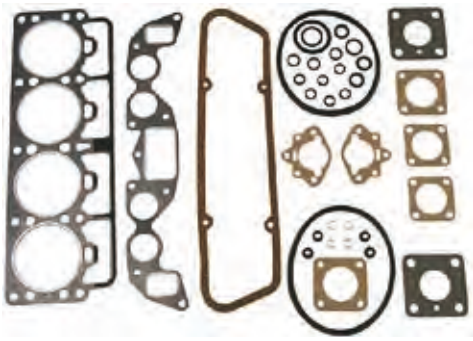

REF	OEM	
REC876300	876300 875587	AQ120B, 125A, 140A BB140A

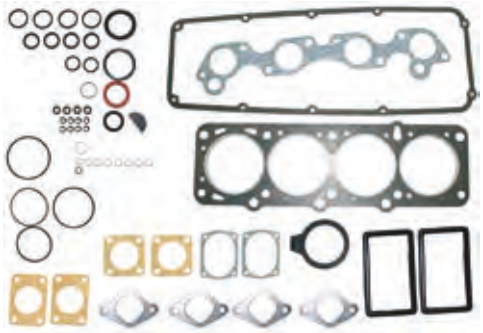

REF	OEM	
REC876337	876359 875570	AQ170C BB170C

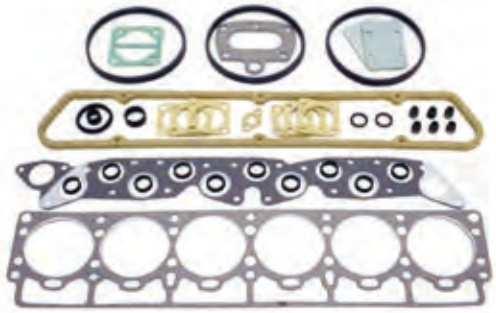

REF	OEM	
REC876302	876302 876022	AQ125B AQ131A, B, C, D AQ145B AQ151A, B, C 230A, B 250A, B



REF	OEM	
REC876301	876301 875678	AQ145A BB145A



REF	OEM	
REC876303	876303 876071	AQ171A, C 251A

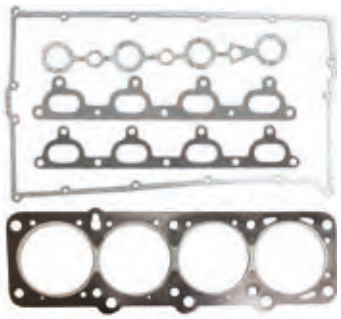

JUNTAS TAPA DISTRIBUCIÓN — TIMING COVER GASKET — GUARNIZIONI COPERCHIO DISTRIBUZIONE — JOINT CARTER DE DISTRIBUTION

new

REF	OEM	
REC1378493	1378493 1276817 463359	AQ/B 230/250/251 120/125/131/140/151/171/145

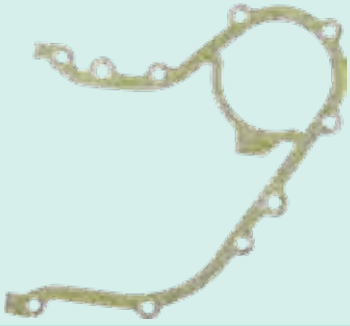

JUNTAS TAPA BALANCINES — VALVE COVER GASKET — GUARNIZIONI COPERCHIO PUNTERIE — JOINTS DE CACHE CULBUTEUR

REF	OEM	
REC419678	419678	AQ60F, 90, 95, 95A, 110, 120 AQ115A, B AQ130A, B, C, D MB20A, B, C



REF	OEM	
REC430039	430039	AQ165A AQ170A, B, C BB165A BB170A, B, C



REF	OEM	
REC1378909	1378909	AQ120B, 125A, 140, 145A BB140A, 145A

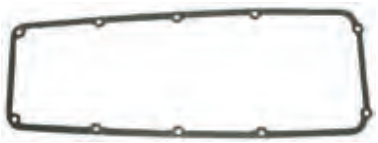

REF	OEM	
REC1378870	1378870 1336753	AQ125B AQ131A, B, C, D AQ145B AQ151A, B, C 230A, B 250A, B



REF	OEM	
REC1378853	1378853	AQ171A, C 251A

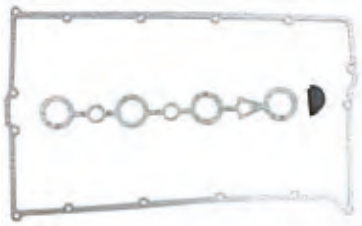

JUNTA PORTARETÉN TRASERO CIGÜEÑAL — CRANKSHAFT REAR SEAL GASKET — GUARNIZIONE PARAOLIO POSTERIORE ALBERO MOTORE — JOINT ARRIERE DE VILEBREQUIN

new

REF	OEM	
REC1378492	1378492 463829	AQ/B 230/250/251 120/125/131/140/151/171/145



JUNTAS DE ADMISIÓN — INTAKE GASKET — GUARNIZIONE DI ASPIRAZIONE — JOINTS D'ADMISSION

REF	OEM	
REC1378879	1378879 1266796 463225	AQ120B AQ125A, B AQ131A, B, C, D AQ140A BB140 AQ145A, B AQ151A, B, C 230A 250A



REF	OEM	
REC1378854	1378854	AQ171A, C 251A



JUNTAS DE ADMISIÓN & ESCAPE — INTAKE & EXHAUST GASKET — GUARNIZIONE DI ASPIRAZIONE E DI SCARICO — JOINTS D'ADMISSION & D'ECHAPPEMENT

REF	OEM	
REC1378913	1378913 461092	AQ165A AQ170A, B, C BB170C



JUNTAS DE ESCAPE BASE VOLVO / EXHAUST GASKET BASE VOLVO / GUARNIZIONE DI SCARICO BASE VOLVO / JOINTS D'ECHAPPEMENT BASE VOLVO

REF	OEM		COLECTOR MANIFOLD COLETTORE COLLECTEUR
REC856044	856044 824633	AQ115A, B AQ130A, B, C, D BB115A, B, C	HGE4532



REF	OEM	
REC855513	855513	AQ171A,C 251A



REF	OEM	
REC855967	855967	230A, B 250A, B AQ120, 125, 131, 140, 145,151



REF	OEM	
REC1378911	1378911 418870	AQ60F, 90, 95, 95A, 100, 105A, 110, 120 BB30, 10 MB18 MB20A, B, C



JUNTAS DE CÁRTER / OIL PAN GASKET / GUARNIZIONE COPPA DELL'OLIO / JOINTS DE CARTER D'HUILE

REF	OEM		
REC1378864	1378864 463587 418262	AQ60F, 90, 95, 95A, 105, 110 AQ115A, B, AQ120, B AQ125A, B AQ130A, B, C, D AQ131A, B, C, D AQ140A	AQ145A, B AQ151A, B, C AQ171A, C 230A, B 250A, B 251A MB18 MB20A, B, C

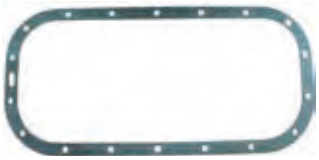

REF	OEM	
REC1378914	1378914 461113	AQ165A, B AQ170A, B, C BB165A BB170A, B, C



KIT JUNTAS INFERIOR / CONVERSION GASKET SETS / KIT GUARNIZIONI PARTE BASSA / POCHETTE BASSE

REF	OEM	
REC876342	876342 875400	AQ60F, 90, 95, 95A, 105, 110, 120 AQ115A, B AQ130A, B, C, D MB20A, B, C Incluye juntas para B18, 20 Includes B18, 20 mod. gaskets Include le guarnizione per B18, 20 Joints pour B18, 20 sont inclus.

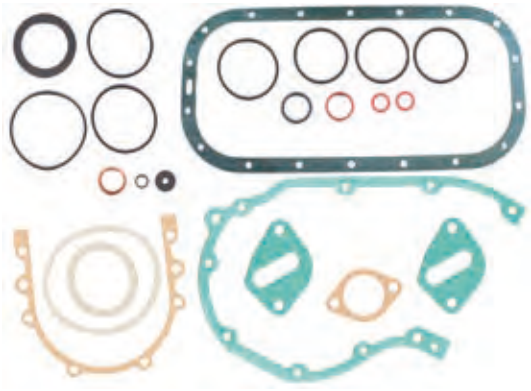

REF	OEM	
REC876306	876306 875403	AQ165A AQ170A, B, C BB165A BB170A, B, C

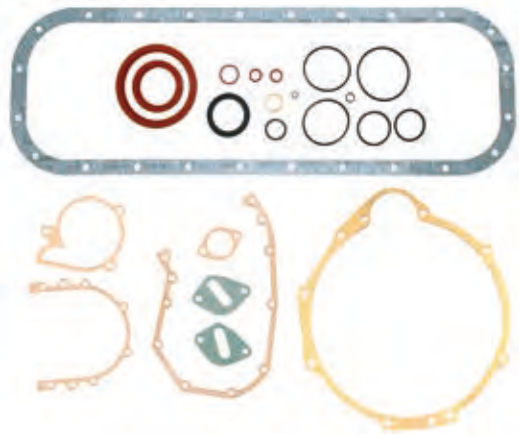

REF	OEM		
REC876393	876393 876433 875588	AQ120B AQ125A AQ140A	AQ145A BB140A BB145A



REF	OEM	
REC876448	876448 876023	AQ125B AQ145B

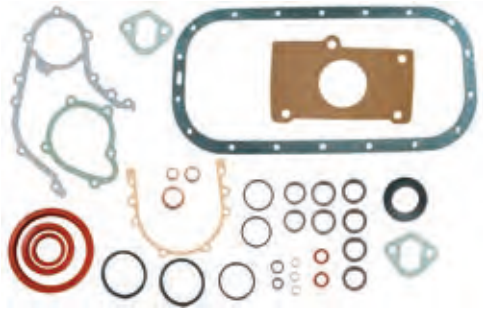

REF	OEM	
REC876304	876304 876072	AQ131A, B, C, D AQ151A, B, C 171A, C 230A, B 250A, B 251A

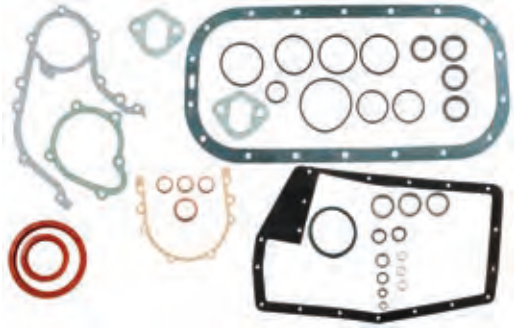

Permatex P. 27

MOTORES DIESEL | DIESEL ENGINE | MOTORI DIESEL | MOTEUR DIESEL

JUNTAS CULATA | CYLINDER HEAD GASKETS | GUARNIZIONE TESTATA | JOINTS DE CULASSE

REF	OEM		KIT	Ø
REC859151	859151 833070	MD1B, 2B, 3B AQD2B	REC876377	89 mm



REF	OEM		KIT
REC859137	859137 833453	MD11C, D MD17C, D	REC876376 REC876380



REF	OEM		KIT
REC840569	840569	2001 AG, B, BG	REC876307

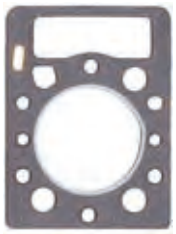

new

REF	OEM	
REC861865	861865	MD2010/B/-C/-D



REF	OEM		KIT
REC859134	859134 838127	MD5A, B, C	REC876341



REF	OEM		KIT
REC859094	859094 840328	2002 AG, B, BG, D	REC876308

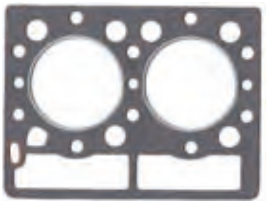

REF	OEM		Ø
REC833274	833274	D1A, 2A AQD2A MD1, 1A, 2, 2A	79 mm



REF	OEM		GRUESO THICKNESS SPESSORE EPAISSEUR	KIT
REC3809167	3809167 859136 840270 860749	MD 7A, B MO 35145+	0,8 mm	REC876431

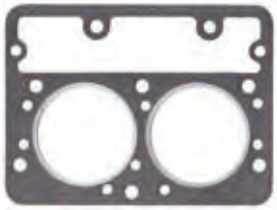

new

REF	OEM	
REC3580234	3580234	MD2020/B/-C/-D

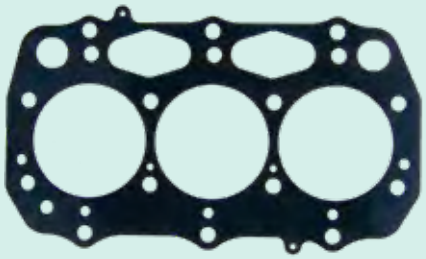

REF	OEM		KIT
REC859135	859135 3875376	MD6A, B	REC876379

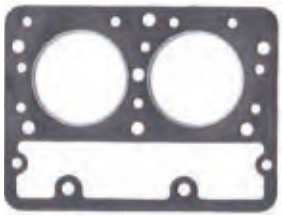

REF	OEM		KIT
REC3580309	3580309	MD2030A, B, C, D	REC21760



REF	OEM		GRUESO THICKNESS SPESSORE EPAISSEUR	KIT
REC3809167	859136	MD7A MO -35144	1,3 mm	REC876431

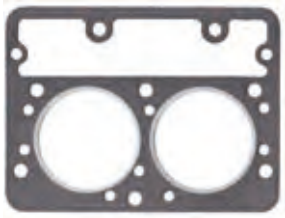

REF	OEM		KIT
REC3584202	3584202 3580482	2040 MD2040A, B, C, D	REC21761

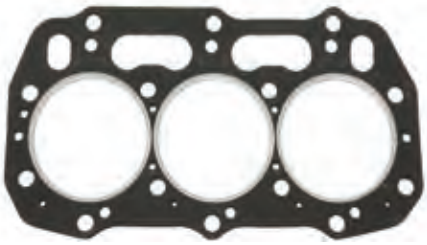

REF	OEM		GRUESO THICKNESS SPESSORE EPAISSEUR
REC3808602	3808602	D1-13, B, F	1,2 mm
REC3809647	3809647		1,3 mm



REF	OEM		GRUESO THICKNESS SPESSORE EPAISSEUR
REC3812109	3812109	D1-20A, B, F	1,2 mm
REC3886431	3886431		1,3 mm



REF	OEM		KIT
REC859093	859093 840405	2003, AG, B, BG, D, T, TB	REC876310

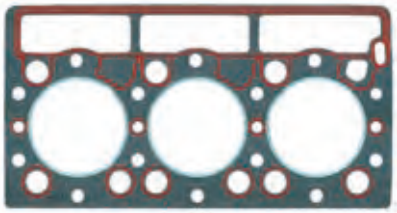

REF	OEM		GRUESO THICKNESS SPESSORE EPAISSEUR
REC3840842	3840842	D1-30A, B, F	1,3 mm
REC3812199	3812199		1,2 mm



REF	OEM		GRUESO THICKNESS SPESSORE ÉPAISSEUR	KIT
REC21192973	21192973 3840843	D2-40A, B, F	1,2 mm	
REC21192974	21192974 3889517		1,3 mm	



REF	OEM		KIT
REC859647	859647	MD22A, L-A, L-B, P-B TAMD22P-B TMD22A, B	REC21762 REC21763 REC21764 REC21765



REF	OEM		KIT
REC3582432	3582432 858993 838628	D31 KAD32 P-A, P	REC3582435



REF	OEM		KIT
REC859150	859150 1544109	AD30A AQAD30A MD30A TAMD30A TD30A TMD30A	REC3582597

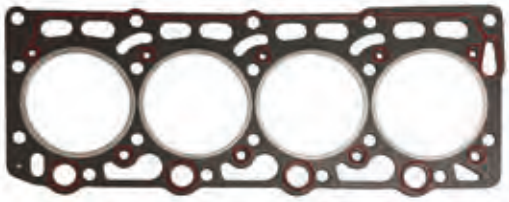

REF	OEM		GRUESO THICKNESS SPESSORE ÉPAISSEUR	KIT
REC859152	859152 829531 829214	MD21A, B AQD21A, B	1,6 mm	REC876417



REF	OEM		KIT
RM21228429	21228429	D2-55A, B, C, E D2-75A, B, C D2-50F	REC3589322



REF	OEM	
REC21165389	21165389 3581868	D4



REF	OEM		GRUESO THICKNESS SPESSORE ÉPAISSEUR	A	CLASE CLASS CLASSE CLASSE
REC30731261	30731261	D3-110I-A, I-B, I-C	1.02 mm	1	A
REC30731262	30731262	D3-130A-A, I-A, A-B, I-B, A-C, I-C	1.07 mm	2	B
REC30731263	30731263	D3-160A-A, I-A, A-B, I-B, A-C, I-C,	1.12 mm	3	C
REC30731264	30731264	D3-190A-B, I-B, A-C, I-C.	1.17 mm	4	D
REC30650525	30650525		1.27 mm	5	E



REF	OEM		KIT
REC3583786	3583786 3582433 3580742 858992 876853	41 KAD42A KAMD42A D43, 44, 300	REC3583787 REC3583788

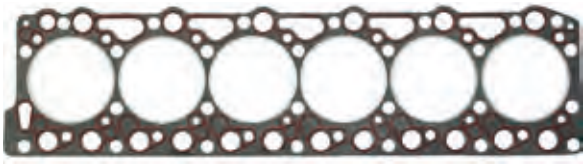

REF	OEM		KIT
REC21165390	21165390 3581869	D6	REC21371111



REF	OEM		KIT
REC859155	859155 858503	40A, B, C	REC3582596

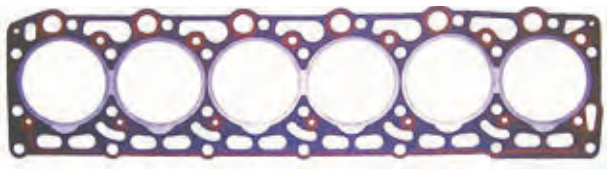

KIT JUNTAS SUPERIOR — GASKET HEAD SETS — KIT GUARNIZIONI PARTE ALTA — POCHETTE HAUTE

REF	OEM	
REC876377	876377 875500 875502 875504 876374 876375	MD1B, MD2B (Se necesitan 2 kits | 2 kits required | 2 kit ne servono | 2 sont nécessaires) MD3B (Se necesitan 3 kits | 3 kits required | 3 kit ne servono | 3 sont nécessaires)

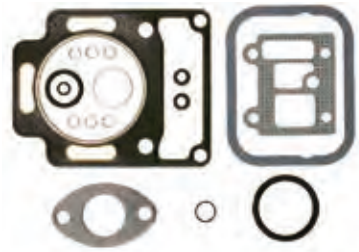

REF	OEM	
REC876341	876341 875561	MD5A, B, C



REF	OEM	
REC876307	876307	2001, AG, B, BG

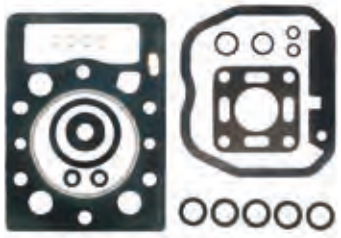

REF	OEM	
REC876308	876308	2002, AG, B, BG, D

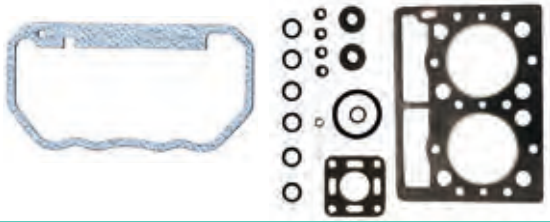

REF	OEM	
REC876376	876376 875553	MD11C, D No incluye kit de gomas: REC875550 Kit seals not included: REC875550 Non include kit dei paraolio: REC875550 Les joints de chemise ne sont pas inclus: REC875550

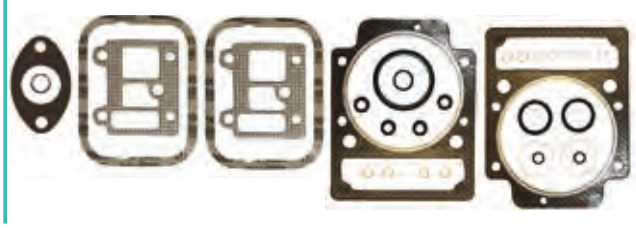

REF	OEM	
REC876380	876380 875572	MD17C, D No incluye kit de gomas: REC875550 Kit seals not included: REC875550 Non include kit dei paraolio: REC875550 Les joints de chemise ne sont pas inclus: REC875550

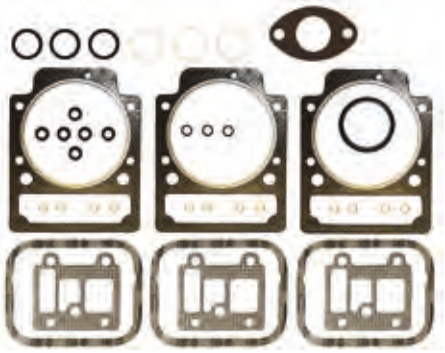

REF	OEM	
REC876379	876379 875508	MD6A, B

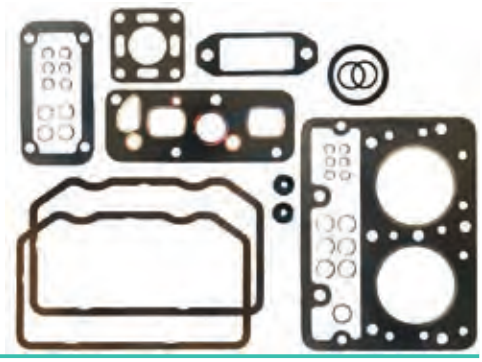

REF	OEM		GRUESO THICKNESS SPESSORE ÉPAISSEUR
REC876431	876430 876431	MD7A	1.3 mm

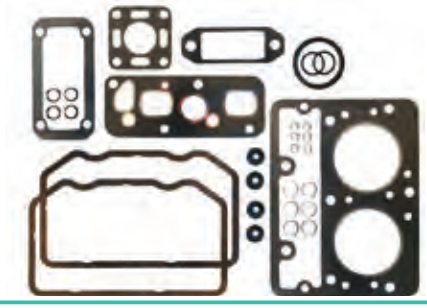

REF	OEM	
REC876310	876310	2003, D, T, TB, AG, B, BG

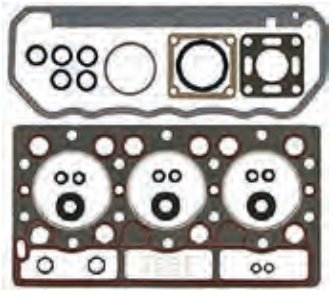

REF	
REC21760	2030A, B, C, D



REF	
REC21761	2040A, B, C, D

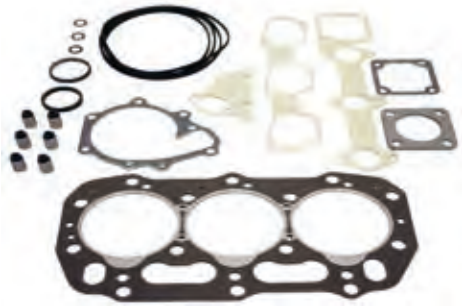

REF	OEM	
REC3589322	3589322	D2-55A, B, C, E D2-75A, B, C D2-50F

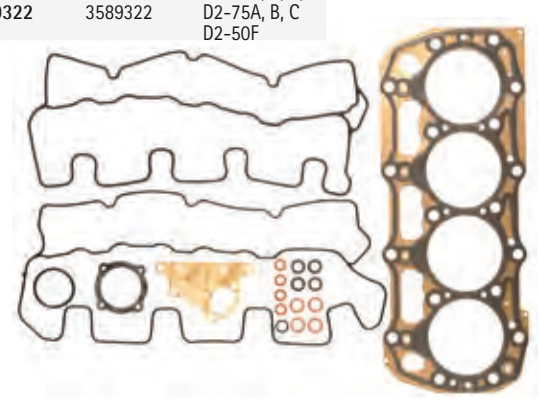

REF	OEM	
REC21371112	21371112 3588432	D4

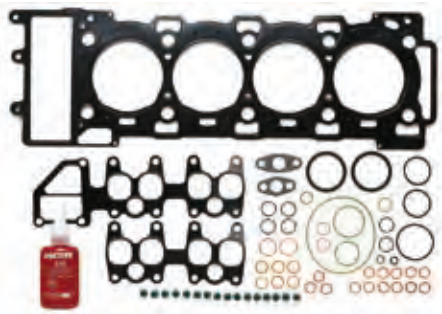

REF	OEM	
REC876417	876417 875388 875567	AQD21A, B MD21A, B

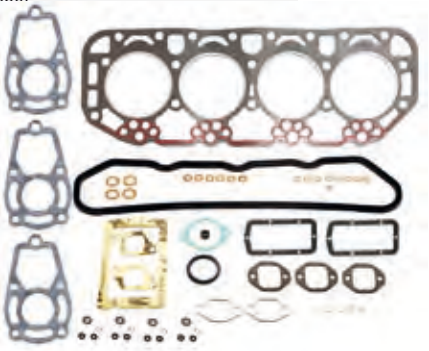

REF	OEM	
REC3582597	3582597 876453 875031	MD30A AD30A TD30A TMD30A AQAD30A TAMD30A

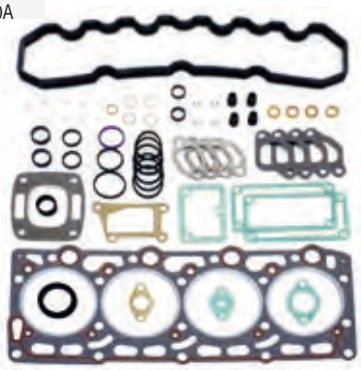

REF	OEM	
REC3582435	3582435 876103 876121 3582434	MD31A, TMD31A, L-A AQAD31A TAMD31A, B, P-A, L-A, M-A AD31B, P-A, L-A KAD32P, P-A

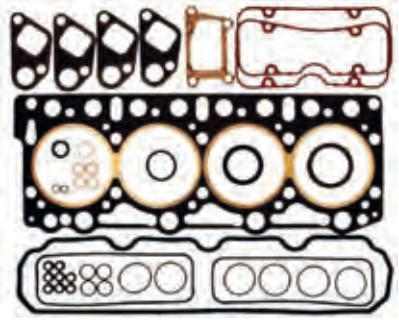

REF	
REC21762	MD22A, L-A



REF	
REC21763	MD22L-B, P-B

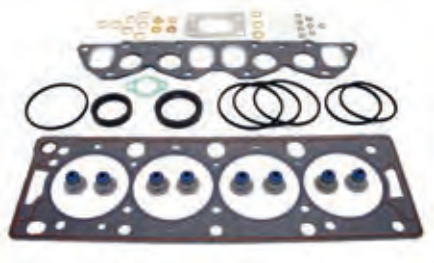

REF	
REC21764	TMD22A

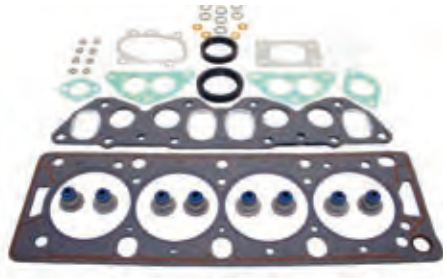

REF	
REC21765	TAMD22P-B, P-C TMD22B

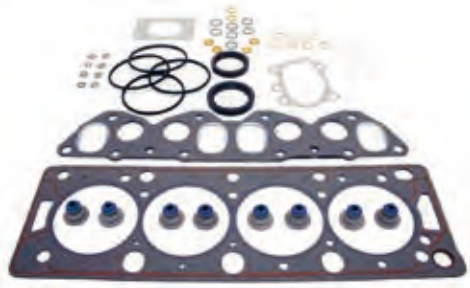

REF	OEM	
REC3582596	3582596 876395 875633 875662	MD40A TMD40A, B, C AQD40A AQAD40A, B TAMD40A, B

Junta de turbo no de acero
Gasket turbo not steel version
Guarnizione turbo non in acciaio.
Joint de turbo, pas en acier.



REF	OEM	
REC3583787	3583787 3582436 876104 876530	AQAD41A AQD41A D41B, L-A KAD42A KAD43P-A KAMD42A KAMD43P-A, P-B TAMD41A, B, P-A, L-A, M-A, H-A TMD41A, B, L-A

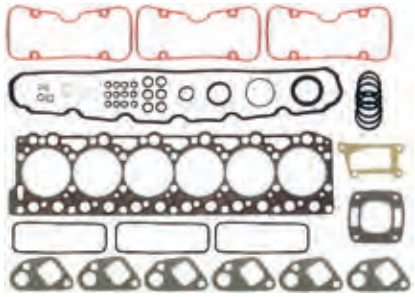

REF	OEM	
REC876416	876416 875438	AQD32A MD32A

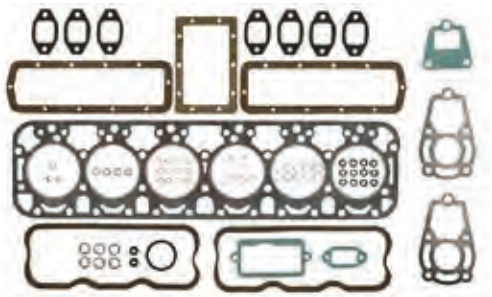

REF	OEM	
REC21371111	21371111 3588433	D6

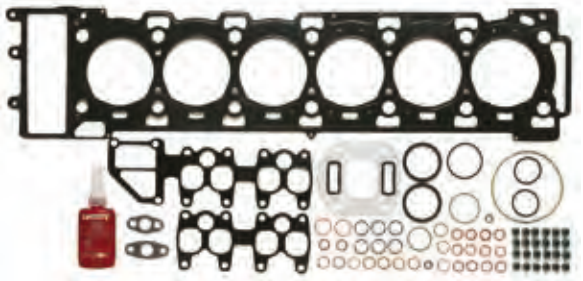

REF	OEM	
REC3583788	3583788 3582437	D44, 300 KAD44P-A, P-B, P-C KAMD44P-A, P-C KAD300-A KAMD300-A

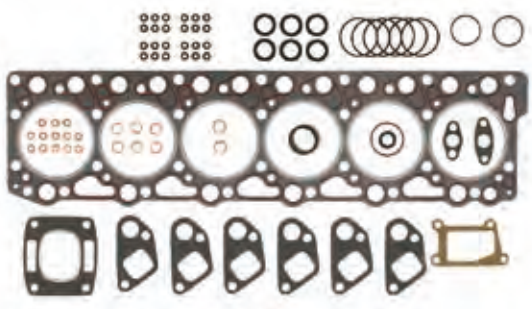

JUNTA DE CULATA
CYLINDER HEAD GASKET
GUARNIZIONE TESTATA
JOINT DE CULASSE

REF	OEM	
REC3883845	3883845 3589554	D3-110I-A D3-130A-A, I-A D3-160A-A, I-A



JUNTA DE CULATA
CYLINDER HEAD GASKET
GUARNIZIONE TESTATA
JOINT DE CULASSE

REF	OEM	
REC121154		D3-110I-F, I-G D3-140A-F, A-G, I-F, I-G D3-150I-F, I-G D3-170A-F, A-G, I-F, I-G D3-200A-F, A-G, I-F, I-G D3-220A-F, A-G, I-F, I-G

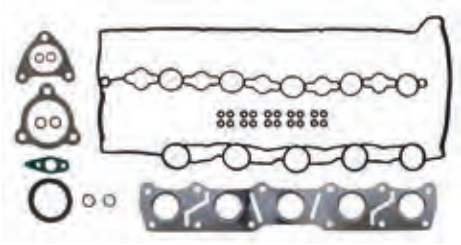

JUNTA DE CULATA
CYLINDER HEAD GASKET
GUARNIZIONE TESTATA
JOINT DE CULASSE

REF	OEM	
REC121153		D3-110I-D, I-E D3-140A-D, A-E, I-E D3-150I-D, I-E D3-170A-D, A-E, I-D, I-E D3-200A-D, A-E, I-D, I-E D3-220A-D, A-E, I-D, I-E

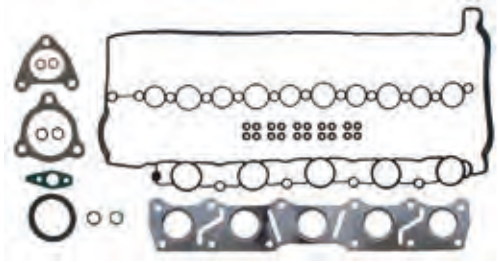

JUNTA DE CULATA
CYLINDER HEAD GASKET
GUARNIZIONE TESTATA
JOINT DE CULASSE

REF	OEM	
REC121152		D3-110I-B, I-C D3-130A-B, A-C, I-B, I-C D3-160A-B, A-C, I-B, I-C D3-190A-B, A-C, I-B, I-C

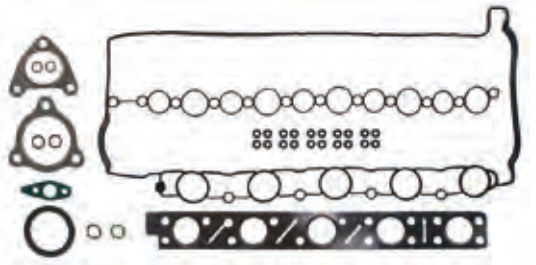

JUNTAS TAPA BALANCINES — VALVE COVER GASKET

GUARNIZIONI COPERCHIO PUNTERIE — JOINTS DE CACHE CULBUTEUR

REF	OEM	
REC859120	859120 802399	MD1A, B MD2A, B MD3B MD11C, D MD17C, D



REF	OEM	
REC838066	838066	MD5A, B, C



REF	OEM	
REC840115	840115 3875384	MD6A, B, MD7A (Se necesitan 2 kits | 2 kits required | 2 kit ne servono | 2 sont nécessaires) MD7B (Se necesita 1 kit | 1 kit required | 1 kit ne servono | 1 kit est nécessaire)



REF	OEM	
REC859042	859042 840572	2001, AG, B, BG



REF	OEM	
REC859043	859043 840440	2002 AG, B, BG, D



REF	OEM	
REC859044	859044 840461	2003 AG, B, BG, D, T, TB



REF	OEM	
REC30713459	30713459	D3 -B, -C, -D, -E

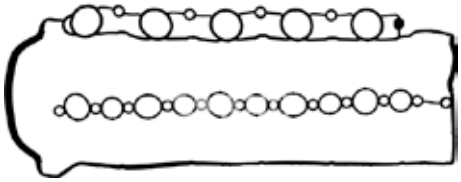

REF	OEM	
REC31430317	31430317 30777600	D3,-G, -F

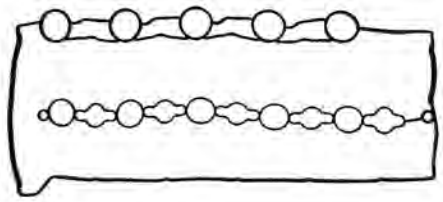

REF	OEM		
REC838652	838652	31, 32 AD31A, B, L-A, P-A AQAD31A MD31A	TAMD31A, B TAMD31L-A, M-A, P-A TMD31A, B, L-A KAD32P-A



REF	OEM	
RM1542287	1542287	AD40B AQAD40A, B AQD40A MD40A TAMD40A, B TMD40A, B, C

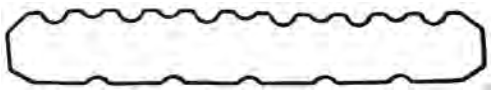

REF	OEM	
REC838653	838653	D41 KAD42A, B, P-A KAMD42A, B, P-A KAD43P-A



REF	OEM	
REC1544119	1544119	AD30A AQAD30A MD30A TAMD30A TMD30A



REF	OEM	
REC8642665	8642665	D3-110 --> D3-190
REC8692438	8692438	

REC8692438

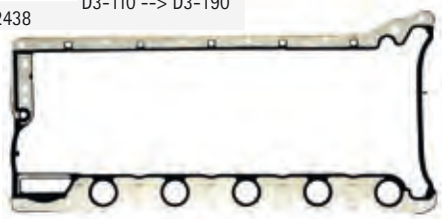

REC8642665



REF	OEM	
REC3812131	3812131	D1-20, B, F

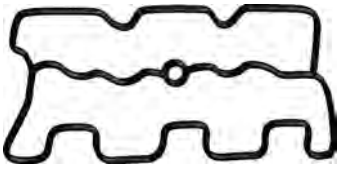

REF	OEM	
REC3809657	3809657	D1-13, B, F

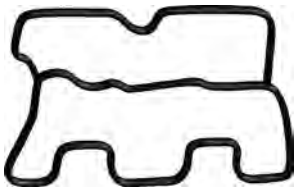

REF	OEM	
REC3884548	3884548	D1-30, B, F



REF	OEM	
REC838654	838654	31, 32 (Se necesitan 2 piezas | 2 pieces required | 2 pz ne servono | 2 pièces sont nécessaires) 41, 42, 43 (Se necesitan 3 piezas | 3 pieces required | 3 pz ne servono | 3 pièces sont nécessaires) KAD42A KAMD42A



REF	OEM		
REC889486	889486	D2-55, B, C, D, E, F D2-60F D2-75, B, C	JUNTA SUPERIOR | UPPER GASKET | GUARNIZIONE SUPERIORE | JOINT SUPÉRIEUR
REC3583546	3583546	D2-55, B, C, D, E, F D2-60F D2-75, B, C, F	JUNTA INFERIOR | DOWN GASKET | GUARNIZIONE INFERIORE | JOINT INFÉRIEUR

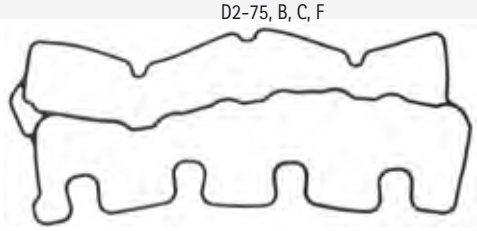

REC889486

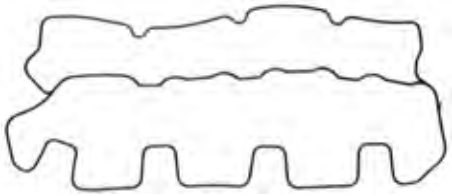

REC3583546

RETENES TAPA BALANCINES — VALVE COVER SEAL — PARAOLIO COPERCHIO PUNTERIE — JOINT SPI DE CACHE CULBUTEUR

new

VARILLA NIVEL ACEITE
OIL DIPSTICK
ASTICELLA OLIO
JAUGE D'HUILE



REF	OEM		
REC949187	949187	2001, 2002, 2003 D31, 41, 30, 40, 42, 43, 44, 11, 13, 4, 6, 9 MD11, 17, 5, 6, 7 D162, 60, 61, 62, 71, 72, 73, 74, 75 AQ	6.3 x 2.4 mm

new

REF	OEM		
REC955976	955976 12262 926033 14012262 6647311	2001, 2002, 2003	14.3 x 2.4 mm
REC969198	969198 967643	2001, 2002, 2003 D31, 41, 32, 42, 43, 13	7.3 x 2.1 mm

EJE BALANCÍN
ROCKET SHAFT
ASSE BILANCERE
ARBRE DE CULBUTEUR



new

REF	OEM	
REC840442	840442	2001 (x1) 2002 (x2) 2003 (x3)

TORNILLO TAPA
COVER SCREW
VITE COPERCHIO
VIS DE COUVERCLE



new

REF	OEM
REC471956	471956

SISTEMA LUBRICACIÓN
LUBE SYSTEM
SISTEMA LUBRIFICAZIONE
SYSTÈME DE LUBRICATION



RETÉN TAPA LATERAL BLOQUE — SEAL SIDE COVER BLOCK — GUARNIZIONE COPERCHIO LATERALE BLOCCO — JOINT DE COUVERCLE LATERAL DU BLOC

REF	OEM	
REC1542052	1542052	30, 31, 32, 40, 41, 42, 43, 44, 300



JUNTAS COLECTOR Y CODOS DE ESCAPE — EXHAUST MANIFOLD & ELBOW GASKET — GUARNIZIONE COLLETTORE E GOMITO DI SCARICO — JOINTS COLLECTEUR ET COUDES D'ÉCHAPPEMENT

REF	OEM		PIEZAS NECESARIAS REQUIERED PIECE NE SERVONO PEZE PIÈCES NÉCESSAIRES
REC3583336	3583336	D4	1
		D6	2



REF	OEM		PIEZAS NECESARIAS REQUIERED PIECE NE SERVONO PEZE PIÈCES NÉCESSAIRES
REC3582725	3582725	D4, D6	2



REF	OEM	
REC859015	859015 803374	MB10A MD1A, B MD2A, B MD3B MD5A, B, C MD6A, B MD7A, B MD11C, D MD17C, D



REF	OEM	
REC840902	840902 3875050	MD6A, B MD7A, B 2001, 2002, 2003 AG, B, BG, D, T, TB



REF	OEM	
REC859107	859107	MD1A, B MD2A, B MD3B MD5A, B, C MD6A, B MD7A, B MD11C, D MD17C, D



REF	OEM	
REC859145	859145 833598 897322	MD1A, B MD2A, B MD3B MD11C, D MD17C, D



REF	OEM	
REC30729340	30729340	D3



REF	OEM	
REC859140	859140 819720 819723	MD19, 27, 29, 32A MD21A, B AQD19, 27, 29A, 32A AQD21A, B



REF	OEM		PIEZAS NECESARIAS REQUIERED PIECE NE SERVONO PEZE PIECES NÉCESSAIRES
REC1542123	1542123 1542177	30 40	4 6



REF	OEM		PIEZAS NECESARIAS REQUIERED PIECE NE SERVONO PEZE PIECES NÉCESSAIRES
REC876144	876144	31, 32 41, 42, 43, 44, 300	4 6



REF	OEM	
RM859834	859834	MD22A, L-A, L-B, P-B TMD22A, B TAMD22P-B TAMD315-A D2-50F D2-55A, B, C, D, E, F



new

REF	OEM	
REC840944	840944	2003T

TUBO ADMISIÓN
INTAKE TUBE
TUBO ASPIRAZIONE
TUBE D'ADMISSION



new

REF	OEM	
REC861414	861414	D31, D41, MD22

TUBO ESCAPE
EXHAUST TUBE
TUBO SCARICO
TUYAU D'ÉCHAPPEMENT



REF	OEM	
REC859194	859194 3875382	MD6A, B MD7A, B

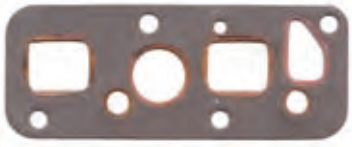

REF	
REC22119	MD30A, TMD30A, AQAD30A, T AMD30A

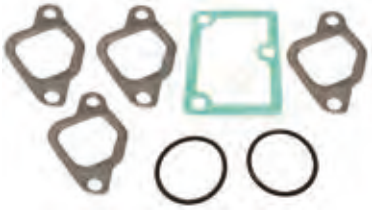

REF	
REC22120	MD40A AQAD40A, B AMD40A, B

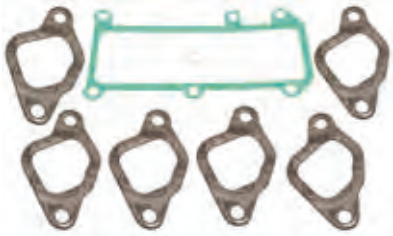

REF	
REC22121	AD40B AQAD40A TMD40A, B, C



new

TÓRICA AMISION
INTAKE O-RING
FANCIA TONDA ASPIRAZIONE
JOINT TORIQUE D'ADMISSION

REF	OEM	
REC967944	967944	D31 D41 D32 D42 D300 D43 D44



JUNTAS TURBO — TURBO GASKETS — GUARNIZIONI TURBINE — JOINTS DE TURBO

REF	OEM	
RM3588435	3588435	D4, 6



REF	
REC22034	2003T, TB

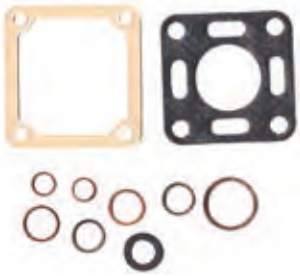

REF	OEM	
REC3582595	3582595 876398	TMD30A TMD40A, B, C TAMD30A TAMD40A, B AQD40A AQAD30A AQAD40A, B AD30A



REF	OEM	
REC22134		MD30A, 31A, 40A



REF	OEM	
REC3582563	3582563 876312 876108	AQD41A AQAD31A, 41A TMD31A, B, L-A, TMD41A, B, L-A TAMD31A, B, P-A, L-A, M-A, TAMD41A, B, L-A, M-A, H-A AD31P-A, L-A AD41B, L-A, D31B D41B, L-A D42, 43, 44, 300



REF	OEM	
RM3883844	3883844 1275549 + 21584008	D3



TURBO K26 new

REF	OEM	
REC23557470	22557470 3582676 859111 3581570	D31, 41, 30, 40, 32, 300, 42, 43, 44



CODO AMISION
INTAKE ELBOW
GOMITO ASPIRAZIONE
COUDE D'ADMISSION new

REF	OEM	
REC949841	949841	D4/D6



TUBO CARGA DE ACEITE
OIL INTAKE
TUBO ASPIRAZIONE OLIO
TUYAU D'ASPIRATION D'HUILE new



REF	OEM	
REC22206133	22206133 420641 466393	D31, 41, 30, 21, 70, 32, 42, 43, 44 D12, 13, 3, 4, 6, 9 D300, 100, 120, 102, 103, 121, 122, 162, 163, 165, 60, 61, 63, 71, 72, 73, 74

TUBO DESCARGA DE ACEITE
OIL EXHAUST
TUBO SCARICO OLIO
TUYAU DE SORTIE D'HUILE new

REF	OEM	
REC20707685	20707685 860105	D31, 41, 32, 42, 43, 44 D11, 13, 3, 4, 6, 8 D300



JUNTAS TAPA DISTRIBUCION **TIMING COVER GASKET**

REF	OEM	
REC859039	859039 1542219	D30, 31, 40, 41, 43, 44, 300 KAD / KAMD 42

GUARNIZIONE CARTER DISTRIBUZIONE **JOINTS DE CARTER DE DISTRIBUTION**

REF	OEM	
REC859038	859038 842990	D30, 31, 40, 41, 43, 44, 300 KAD / KAMD 42



JUNTAS TAPA TRASERA CIGÜEÑAL — REAR CRANKSHAFT COVER GASKET — GUAR. CARTER POSTERIORE ALBERO MOTORE — JOINTS DE COUVERCLE ARRIERE DE VILEBREQUIN

REF	OEM	
REC829487	829487	D30, 31, 40, 41, 43, 44, 300 KAD / KAMD 42



Permatex P. 17

JUNTAS CÁRTER — OIL PAN GASKET — GUARNIZIONI COPPA DELL'OLIO — JOINTS DE CARTER D'HUILE

REF	OEM	
REC861822	861822	MD2010A, B, C, D D1-13A, B, F



REF	OEM	
REC21849843	21849843	MD2030A, B, C, D D1-30A, B, F



REF	OEM	
REC3580227	3580227	MD2020A, B, C, D D1-20A, B, F



REF	OEM	
REC3840859	3840859	D2-40A, B, F



REF	OEM	
REC840648	840648 818035	MD21A, B MD19 AQD19 AQD21A, B



REF	OEM		KIT
REC861251	861251 860685 1542247 859032	40, 41, KAD42A KAMD42A D43, 44, 300	REC876349 REC876774



REF	OEM		KIT
REC861250	861250 860684 1544124	30, 31 KAD32P, P-A	REC876427 REC876361



REF	OEM		KIT
REC861603	861603 859726	D22 MD22A, L-A, L-B, P-B TAMD22P-B TMD22A, B	REC21766



KIT JUNTAS INFERIOR — CONVERSION GASKET SETS — KIT GUARNIZIONI INFERIORI — POCHETTE BASSE

REF	OEM	
REC876378	876378 875501	MD1B



REF	OEM	
REC876388	876388 875505	MD3B



VOLVO

RECAMBIOS MARINOS

REF	OEM	
REC876389	876389 875503	MD2B AQD2B

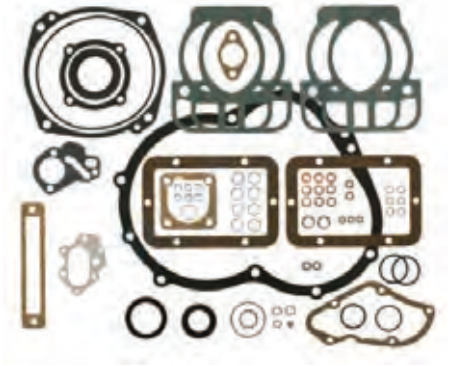

REF	OEM	
REC876384	876384 875554	MD11C, D



REF	OEM	
REC876381	876381 875562	MD5A,B



REF	OEM	
REC876383	876383 875573	MD17C, D



REF	OEM	
REC876382	876382 875715	MD5C



REF	OEM	
REC875757	875757	2001, AG, B, BG 2002, AG, B, BG, D 2003, AG, B, BG, D,B



REF	OEM	
REC876314	876314 875509	MD6A, B MD7A, B

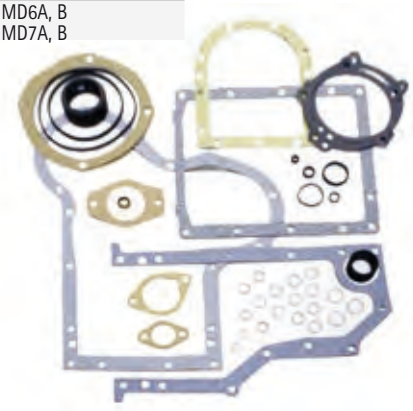

REF	OEM	
REC876054	876054	2003T, TB



REF	OEM	
REC877419	877419	D2-55A, B, C, D, E D2-75A, B, C D2-50F

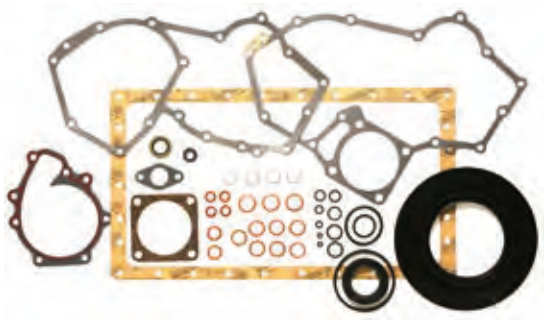

REF	OEM	
REC876427	876427 876032	MD30A AD30A TMD30A AQAD30A TAMD30A



REF	OEM	
REC3588434	3588434	D4, D6



REF	OEM	
REC875387	875387 875421	MD21A, B AQD19 MD19 AQD21A, B



REF	OEM	
REC875439	875439	MD32A AQD32A



REF	OEM	
REC876349	876349 875634	MD40A AD40B TMD40A, B, C AQD40A AQAD40A, B TAMD40A, B



REF	OEM	
REC876655	876655	MD2030A, B, C, D

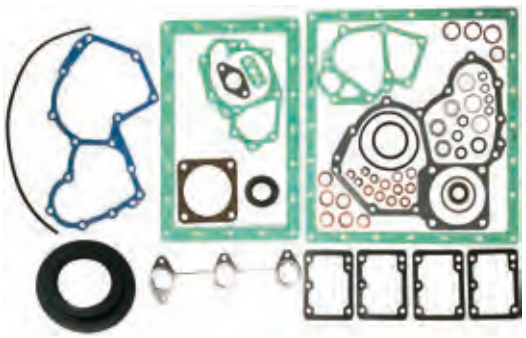

REF	
REC21766	D22A MD22L-A, L-B, P-B TAMD22P-B TMD22A, B, P-C

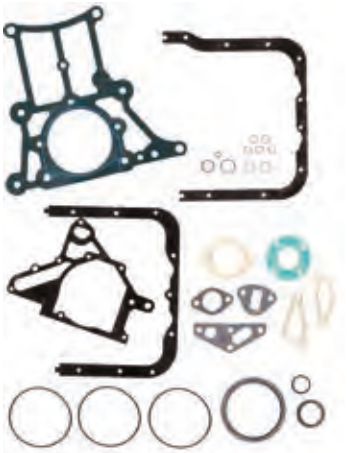

REF	OEM	
REC876774	876774 876362 876106 876531	TMD41A, B, L-A TAMD41A, B, P-A, L-A, M-A, H-A AQAD41A AQD41A D41B, L-A KAD42A KAMD42A D43, 44, 300

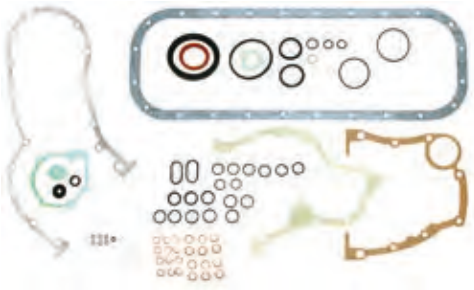

REF	OEM	
REC876361	876361 876105	MD31A TMD31A, L-A AQAD31A TAMD31A, B, P-A, L-A, M-A AD31B, P-A, L-A KAD32P, P-A



RETENES CIGÜEÑAL — CRANKSHAFT SEAL — PARAOLIO ALBERO MOTORE — JOINTS SPI DE VILEBREQUIN

	DELANTERO FRONT SEAL ANTERIORE AVANT	OEM		TRASERO REAR SEAL POSTERIORE ARRIÈRE	OEM	
AQ120B AQ125A, B AQ131A, B, C, D AQ140A BB140A AQ145A, B BB145A AQ151A, B, C AQ165A BB165A AQ170A, B, C BB170A, B, C AQ171A, C 230A, B 250A, B 251A	REC1276425	1276425		REC6842160	6842160	
MD1B, 2B AQD2B MD11C, D	REC803356	3588879				
2001, B, AG, BG 2002, B, D, AG, BG 2003, B, D, T, AG, BG, TB, -SOLAS, B-SOLAS, TB-SOLAS	REC6842273	6842273		REC40005775	40005775	
AD30A AQAD30A MD30A TAMD30A TMD30A MD31A AQAD31A AD31A, B, D-A, L-A, P-A, XD TAMD31A, B, D, L-A, M-A, P-A, S-A TMD31A, B, D, L-A KAD32P-A AQAD40A, B AQD40A TMD40A, B, C TAMD40A, B MD40A AD41A, B, D, L-A, P-A D41A, B, D, L-A AQAD41A TAMD41A, B, D, H-A, H-B, P-A, L-A, M-A TMD41A, B, D, L-A KAD42A, B, P-A KAMD42A, B, P-A TAMD42B, WJ-A KAD43P-A KAMD43P-A KAD44P-A, P-B, P-C KAMD44P-A, P-C KAD300-A KAMD300-A	REC1542318	1542318		REC860971	3582851	
D2-50F D2-55A, B, C, D, E, F D2-60F D2-75A, B, C, F	REC3580586	3580586		REC3583700	3583700	
MD2040A, B, C, D	REC3580586	3580586		REC861823	861823	
D3-110, 130, 140, 150, 160, 170, 190, 200, 220	REC31339213	31339213		REC31339213	31339213	
MD2010A, B, C, D MD2020A, B, C, D MD2030A, B, C, D D1-13A, B, F D1-20A, B, F D1-30A, B D2-40A, B, F	REC3580026	3580026		REC861823	861823	
D4 D6	REC3582748	3582748		REC3586960	3586960	

MOTORES GASOLINA | GAS ENGINE | MOTORI BENZINA | MOTEUR ESSENCE

KITS PISTONES (BASE VOLVO) | PISTONS SETS (VOLVO BASE) | KIT PISTONI (BASE VOLVO) | KITS PISTONS (BASE VOLVO)

REF	OEM			
REC272002	272002	22 mm	STD	AQ115A, B AQ105A AQ130A, B, C, D, AQ165A AQ170A, B, C BB115A, B, C BB165A BB170A, B, C MB10A MB20A, B, C
REC272004	272004	22 mm	.030	



GM FORD P. 5

REF	OEM			
REC272059	272059	24 mm	.030	AQ105A AQ115A, B AQ130A, B, C, D, AQ165A AQ170A, B, C BB115A, B, C, BB165A BB170A, B, C MB10A MB20A, B, C,



REF	OEM			
REC272040	272040	1.75 x 2.0 x 4.0 mm	STD	AQ120B AQ125A AQ140A BB140A



KITS AROS DE PISTONES | PISTONS RINGS SET | KIT FASCE PISTONI | KITS SEGMENTS

	REF	OEM			
AQ105, 115, 130, MB 20 (B20), 165A, 170A	REC275334	275334	2.0 x 2.0 x 4.7	STD	
	REC275336	275336	2.0 x 2.0 x 4.7	.030	
AQ115, 130 (B20), 170B, 170C	REC275344	275344	1.75 x 2.0 x 4.0	STD	



	REF	OEM		
AQ120B, 125A, 140A	REC275340	275340	1.75 x 2.0 x 4.0	STD
	REC275341	275341	1.75 x 2.0 x 4.0	0.20



REF	OEM			
AQ120B, 125A, 140A	REC275337	275337	2.0 x 2.0 x 4.0	STD
	REC275338	275338	2.0 x 2.0 x 4.0	0.50
AQ145A	REC275331	275331	1.75 x 2.0 x 4.0	STD



REF	OEM			
AQ125B AQ145B AQ131A, B, C, D AQ151A, B, C AQ171A, C, AQ230A, 250A, 251A	REC275369	275369	1.75 x 1.75 x 3.5 mm	STD
		275370	1.75 x 1.75 x 3.5 mm	0.30



KITS COJINETES BANCADA — MAIN BEARING KITS — KIT BRONZINE DI BANCO — KITS COUSSINETS DE VILEBREQUIN

REF	OEM		
AQ60, 90, 95, 100, 105, 110, 115, 120, 120B, 125A, 130, 140A, 145A MB18, 20 BB30, 100	REC271214	271214	STD
	REC271215	271215	0.10
AQ165, 170	REC271217	271217	STD
	REC271218	271218	0.10



REF	OEM		
AQ131C, D 230B, 230A, 250A, 250B, 251A, AQ151C, 171C	REC270906	270906	STD
	REC270907	270907	0.25



KITS COJINETES BIELA — CONNECTING ROD BEARING KITS — KIT BRONZINE DI BIELLA — KITS COUSSINETS DE BIELLE

REF	OEM		
AQ60, 90, 95, 100, 105, 110, 115, 120, 130 MB18, 20 BB30, 100 27 mm	REC271051	271051	STD
AQ105, 115, 120B, 125A, 130, 140A, 145A MB20 24 mm	REC271063	271063	STD
AQ165, 170A, 170B MO-87712 27 mm	REC271054	271054	STD



REF	OEM		
AQ120B, 131, 145B, 151, 171, 230A, 250A, 251A	REC270136	270136	STD
	REC270137	270137	0.25



KITS COJINETES ÁRBOL DE LEVAS | BEARING KIT FOR CAMSHAFT | KIT BRONZINE ASSE A CAME | KITS COUSSINETS D' ARBRE À CAMMES

	REF	OEM	
B21, 23, 25 BB140A, 145A AQ120B, 125A, 125B, 131A, 131B, 131C, 131D 140A, 145A, 145 B, 151A 151B, 151C, 171A, 171C 230A, 230B, 250A, 250B			STD



MOTORES DIESEL | DIESEL ENGINE | MOTORI DIESEL | MOTEUR DIESEL

KITS PISTONES | PISTONS SETS | KIT PISTONI | KITS PISTONS

REF	OEM		
REC875551	875551	STD	MD1B, 2B, 3B, AQD2B, MD11C, 11D, 17C, 17D
REC875579	875579	0.75 mm	



REF	OEM		
REC21921545	21921545	STD	D4-180I-B, C, D, E, F D4-210A-A, B D4-210I-A, B D4-225A-B, C, D, E, F D4-225I-B, C, D, E, F D4-260A-A, B, C, D, E, F D4-260D-B, C, D, E, F D4-260I-A, B, C, D, E, F D6-280A-A, B, C, D, E D6-280I-A, B, C, D, E D6-300A-F, F (MC) D6-300I-F D6-310A-A, B, C, D, E D6-310D-B, C D6-310I-A, B, C, D, E D6-330A-B, C, D, E, F D6-330D-B, C, D, E, F D6-330I-B, C, D, E, F D6-350A-A, B D6-370A-B, C, D, E, F D6-370D-B, C, D, E, F D6-370I-A, B, C, D, E, F





REF	OEM		
REC22915955	22915955	STD	D4-300A-A, C, D, E, F D4-300D-A, C, D, E, F D4-300I-A, C, D, E, F D6-400A-E, F D6-435D-A, C, D, E, F D6-435I-A, C, D, E D6-435I-SC-F D6-435I-TC-F D6-435I-WJ-F



KITS GOMAS CAMISAS | GASKET KITS FOR CYLINDER LINER | KIT GOMMINI CAMICIA | KITS JOINTS DE CHEMISE

REF	OEM		Piezas necesarias pcs required peze necessita Pièces nécessaires
REC875550	875550	MD11C, D	2
		MD17C, D	3



REF	OEM		Piezas necesarias pcs required peze necessita Pièces nécessaires
REC275751	275751 875651 275595	MD30, 31	4
		MD40, 41, 42, 43, 44, 300	6
		AQAD30A AD31A, B, L-A, P-A, D-A, XD AD41A, B, D, L-A, P-A AQAD31A, 40A, 41A, D41A, B, D, L-A KAD300-A, KAD42A, B, P-A KAD43P-A, KAD44P-A, P-B, P-C KAMD300-A, KAMD42A, B, P-A KAMD43P-A, KAMD44P-A, P-C MD30A, 31A, 40A TAMD30A TAMD31A, B, D, L-A, M-A, P-A, S-A TAMD40A, B TAMD41A, B, D, H-A, H-B, P-A, L-A, M-A TAMD42B, TAMD42WJ-A, TD30A, TD31ACE, TD40A, TMD30A, TMD31A, B, D, L-A, TMD40A, B, C, TMD41A, B, D, L-A	



KITS CAMISAS (PISTÓN, PIN Y AROS) — CYLINDER LINER KITS (PISTON, PIN & RINGS) — KIT CAMICIA (SPINOTTO, PISTONE E FASCE) — KITS CHEMISES (PISTON, PIN ET SEGMENTS)

DIESEL

	REF	OEM	
AQAD30A AQAD40A, B MD30A MD40A TAMD30A TAMD40A, B TD30A TD40A TMD30A TMD40A, B, C	REC875722	875722 275052 875652 875707	
AD31A AD41A AQAD31A AQAD41A D41A TAMD31A TAMD41A TMD31A TMD41A	REC876099	876099 867975 838660	
AD31B, D-A, XD AD41B, D D41B, D TAMD31B, D TAMD41B, D TMD31B, D TMD41B, D	REC22389354	22389354 876834 876819 876784 876261	
KAD42A, B KAMD42A, B TAMD42B	REC22185019	22185019 877071 876527	

	REF	OEM	
AD31L-A, P-A AD41L-A, P-A D41L-A KAD32P-A KAD42P-A KAD43P-A KAMD42P-A KAMD43P-A TAMD31L-A, M-A, TAMD31P-A, S-A TAMD41H-A, H-B, P-A TAMD41L-A, M-A TAMD42WJ-A TMD31L-A TMD41L-A	REC22185027	22185027 3817034 3581714 876851	
KAD44P-A, P-B, P-C KAD300-A KAMD300-A KAMD44P-A, P-C	REC3817861	3817861 3586722	
TAMD72A, P-A, WJ-A TAMD73P-A, WJ-A	REC876548	876548 876611	
AQD70B, BL, CL MD70B, BK, C TAMD70B, C THAMD70B, C TMD70B, C	REC875541	875541 875320 875655	
TD70CHC, CRC TMD70C	REC875676	875676	

KITS AROS DE PISTONES — PISTONS RINGS SET — KIT FASCE PISTONI — KITS SEGMENTS

DIESEL

	REF	OEM		
MD1B, 2B, 3B AQD2B MD11C, D MD17C, D	REC875498	875498	STD	
	REC875499	875499	0.30	
2001, A, B, AG, BG 2002, B, D, AG, BG 2003, B, D, AG, BG, T, TB, -SOLAS	REC876114	876114	STD	
MD21B AQD21B MD32A	REC876161	876161	STD	

	REF	OEM		
MD TMD22	REC859642	859642	STD	
MD2010A, B, C, D MD2020A, B, C, D	RM861954	861954	STD	
	RM861955	861955	0.50	

	REF	OEM		
MD2030A, B, C, D	RM3580337	3580337	STD	
	RM3580338	3580338	0.50	
MD2040A, B, C, D	RM3580546	3580546	STD	
	RM3580547	3580547	0.50	
D1-13A, B, F D1-20A, B, F	RM3812472	3812472	STD	
D1-30A, B, F D2-40A, B, F	RM3812474	3812474	STD	
D2-75A, B, C, F	RM21301848	21301848	STD	
D2-55A, B, C, D, E, F	RM3583693	3583693	STD	
D3-110I-A, I-C, I-B D3-130I-A, I-C, A-A, I-B D3-130I-A-B, A-C D3-160I-A, I-C, A-A, I-B D3-160I-A-B, A-C D3-190I-C, I-B, A-B, A-C D3 (-2003004563)	RM30731740	30731740	STD	

	REF	OEM		
D3-110I-G, I-C, I-B, I-D D3-110I-E, I-F D3-130I-C, I-B, A-B, A-C D3-140A-G, I-G, A-D D3-140A-E, A-F D3-150I-G, I-D, I-E, I-F D3-160I-C, I-B, A-B, A-C D3-170A-G, I-G, A-D, A-E D3-170I-D, I-E, A-F, I-F D3-190I-C, I-B, A-B, A-C D3-200A-G, I-G, A-D, A-E D3-200I-D, I-E, A-F, I-F D3-220A-G, I-G, A-D D3-220A-E, I-D, I-E, A-F D3-220I-F D3 (2003004564+)	RM30750678	30750678	STD	
D4 D6 SN-A180870 (3,50 mm)	REC22582994	22582994 3586857	STD	
D4 D6 SN-A180871+ (3,00 mm)	REC21711728	21711728	STD	
TD30A, 31ACE, 40A TAMD30A, 31A,31B, 40A, 40B, 41A, 41B TMD30A, 31A, 31B, 40A, 40B, 40C, 41A, 41B AQAD30A, 31A, 40A, 40B, 41A MD30A, 31A 40A AD31A, 31B, 41A, 41B D41A, B (2.3 x 2.5 x 4.0 mm)	REC275350	275350	STD	
AD31L-A, D-A, P-A, XD AD41D, L-A, P-A D41D, L-A TAMD31D, L-A, M-A, P-A, S-A TAMD41D, H-A, H-B P-A, L-A, M-A TAMD42B, WJ-A TMD31D, L-A TMD41D, L-A KAD32P-A KAD42A, B, P-A KAD43P-A KAMD42A, B, P-A KAMD43P-A (2.8 x 2.5 x 4.0 mm)	REC3817033	3817033	STD	
TAMD41H-A, H-B, P-A, L-A, M-A KAMD44P-A, P-C KAD44P-A, P-B, P-C KAD300-A KAMD300-A (3.3 x 2.5 x 3.0 mm)	REC876775	3586758	STD	

KITS COJINETES BANCADA — MAIN BEARING KITS — KIT BRONZE DI BANCO — KITS COUSSINETS DE VILEBREQUIN

	REF	OEM		
MD1B, 2B AQD2B MD3B MD11C, D MD17C, D	RM875483	875483	STD	
	RM875485	875485	0.25	
2001, B, AG, BG	RM875773	875773	STD KIT	
	RM875774	875774	0.25 KIT	

	REF	OEM		
2002, B, C, AG, BG, D	RM875750	875750	STD KIT	

	REF	OEM		
2003, B, D, T, TB, SG, DG, -SOLAS, B-SOLAS, TB-SOLAS	RM875751	875751	STD KIT	
	RM875753	875753	0.25 KIT	
MD21B, A AQD21B, A	REC875306	875306	STD	
	REC875307	875307	0.30	
AQD29, 29A MD29, 29A MD32A AQD32A	REC875334	875334	STD	
MD22L-A, L-B, P-B, A TMDA, -B TMD22P-C, P-B	REC859791	859791	STD	
	REC859945	859945	0.30	
D1-13A, B, F 1 x RM21319767 + 1 x RM3884517	RM21319767	21319767	STD	
D1-20A, B, F 1 x RM21319767 + 2 x RM3884517	RM3884517	3884517	STD	
D1-30A, B, F	RM21132989	21132989 3884512	STD	
D2-40A, B, F	RM21226191	21226191 3884515	STD	

	REF	OEM		
D2-50F D2-55A, B, C, D, E, F D2-60F D2-75A, B, C, F	RM877387	877387	STD	
D4-180I-B, I-C, I-D, I-E, I-F D4-210A-A, I-A, I-B D4-225A-C, A-D, A-E, A-F, I-C, I-D, I-E, I-F, I-B D4-260A-A, A-B, A-C, A-D, A-E, D-B, D-C, D-E, D-D, I-A, I-B, I-C, I-D, I-E, A-F, D-F, I-F D6-280A-A, A-B, A-C, A-D, A-E, I-A, I-B, I-C, I-D, I-E, D, A-E, D-A, D-C, D-E, D-D, I-A, I-C, I-D, I-E, A-F, D-F, I-F D6-300A-F, D-F (MC), I-F D6-310I-A, A-A, A-B, A-C, A-D, A-E, D-E, I-E, D-B, D-C, D-D, I-B, I-C, I-C D6-330A-B, A-C, A-D, A-E, D-E, I-E, D-B, D-C, D-D, D-F, I-B, I-C, I-D, I-F D6-350A-A, A-B D6-370A-B, A-C, A-D, A-E, D-B, D-C, D-E, D-D, A-F, D-F, I-A, I-B, I-C, I-C, I-EI-F D6-400A-E, A-F D6-435D-A, D-D, D-C, D-E, D-F, I-A, I-C, I-D, I-EI-SC-F, I-WJ-F	RM3586871	3586871	STD	
	RM3586877	3586877	STD (*)	
	RM3586873	3586873	0.25	
D9A2A D9-425, 500(R4), 575, D9A-MH D9A2B D9-425, -500(R5), -575, MH D9A2C, D, E, F, G, H, J, K D11B1-A, MP, A-A, A-B, A-C, A-D, A-E, A-D(IPS) D12B2-A MP(IPS)	RM20867178	20867178	STD	
	RM20867751	20867751	0.25	
MD2010A, B, C, D	RM876657	876657	STD	
	RM876658	876658	0.25	
MD2020A, B, C, D	RM876666	876666	STD	
	RM876667	876667	0.25	

(*) central | central | centro | central

	REF	OEM		
MD2030A, B, C, D	RM876660	876660	STD	
	RM876661	876661	0.25	
MD2040A, B, C, D	RM876663	876663	STD	
	RM876664	876664	0.25	

(*) central | central | centro | central

	REF	OEM		
AQAD30A MD30A TAMD30A TMD30A AQAD31A MD31A AD31A, B, L-A, P-A, D-A, XD TMD31A, B, D, L-A TAMD31A, B, D, L-A, M-A, P-A, S-A KAD32P-A AQD40A AQAD40A, B MD40A TMD40A, B, C TAMD40A, B AQAD41A D41A, B, D AD41A, B, D, L-A, P-A TMD41A, B, D, L-A TAMD41A, B, D, H-A, H-B, P-A, L-A, M-A KAMD42A, B, P-A KAD42A, B, P-A TAMD42B, WJ-A KAMD43P-A KAD43P-A KAMD44P-A,P-C KAD44P-A,P-B,P-C KAD300-A KAMD300-A	REC876515	876515	STD	
	REC876516	876516	0.25	
	REC876519	876519	STD (*)	
	REC876520	876520	0.25 (*)	

KITS COJINETES BIELA — CONNECTING ROD BEARING KITS — KIT BRONZINE DI BIELLA — KITS COUSSINETS DE BIELLE

	REF	OEM		
MD1B, 2B, 3B AQAQ2B MD11C, D MD17C, D	RM875491	875491	STD	
	RM875492	875492	0.25	
2001, B, AG, BG 2002, B, D, AG, BG 2003, B, D, T, TB, -SOLAS	RM875747	875747	STD	
	RM875748	875748	0.25	
D1-13A, B, F	RM3884561	3884561	STD	
D1-20A, B, F	RM3884557	3884557	STD	
MD21A, B AQD21A, B	REC818184	818184	STD	
	REC875303	875303	0.30	

	REF	OEM		
MD29, A AQD29, A MD32A AQD32A	REC818184	818184	STD	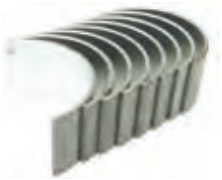
	REC875331	875331	0.30	
MD22A, L-A, L-B, P-B TMD22A, B, P-C TAMD22P-B	REC859807	859807	STD	
	REC859949	859949	0.30	
D1-30A, B, F	RM21252967	21252967	STD	
D2-40A, B, F	RM21132990	21132990	STD	

	REF	OEM		
D2-50F D2-55A, B, C, D, E, F D2-60F D2-75A, B, C, F	RM877388	877388	STD	
D3-110I-A, I-B, I-D, I-E, I-F, I-G, I-H, I-C D3-130A-A, A-B, A-C, I-A, I-B, I-C D3-140A-D, A-E, A-F, A-G, A-H, I-G, I-H D3-150I-D, I-E, I-F, I-G I-H D3-160A-A, A-B, A-C, I-A, I-B, I-C D3-170A-D, A-E, A-F, A-G, A-H, I-D, I-E, I-F, I-G, I-H D3-190A-B, A-C, I-B, I-C D3-200A-D, A-E, A-F, A-G, A-H, I-D, I-E, I-F, I-G, I-H D3-220A-D, A-E, A-F, A-G, A-H, I-D, I-E, I-F, I-G, I-H	RM9180722	31251996	STD	
D4-180I-B, I-C, I-D, I-E, I-F D4-225A-E, A-D, A-F, I-C, I-B, I-D, I-E, I-F D4-210A-A, I-A, I-B D4-260A-A, A-B, A-C, A-D, A-E, A-F, D-B, D-C, D-D, D-E, D-F, I-A, I-B, I-C, I-D, I-E, I-F D4-300A-A, A-C, A-D, A-E, A-F, D-A, D-C, D-E, D-D, D-F, DF(MC), I-D, I-E, I-F D6-280A-A, A-B, A-C, A-D, A-E, I-A, I-B, I-C, I-D, I-E D6-310A-A, A-B, A-C, A-D, A-E, D-B, D-C, D-E, D-D, I-A, I-B, I-C, I-D, I-E D6-330A-B, A-C, A-D, A-E, A-F, D-B, D-C, D-D, D-E, D-F, I-B, I-C, I-D, I-E, I-F D6-350A-A, A-B D6-370A-B, A-C, A-D, A-E, A-F, D-B, D-C, D-D, D-E, D-F, I-A, I-B, I-C, I-D, I-E, I-F D6-400A-E, A-F D6-435D-A, D-C, D-D, D-E, D-F, I-A, I-C, I-D, I-E, I-SC-F, I-WJ-F	RM3586883	3885323	STD	
	RM3885324	3885324	0.25	
D9-425 D9-500(R4) D9-575, D9-A-MH, MG D9-425, MH D9-500(R5), 575, MH D9A2, A, B, C, D, E, F, G, H, J, K	RM20867177	20867177	STD	
	RM20867661	20867661	0.25	
D11-A MP D11B2-A MP(IPS) D11A-A, A-B, A-C, A-C(IPS), A-D, -A-D(IPS), A-E	RM20856959	20856959	STD	

	REF	OEM		
MD2010A, B, C, D	RM876669	876669	STD	
	RM876670	876670	0.25	
MD2020A, B, C, D	RM876672	876672	STD	
	RM876680	876680	0.25	
MD2030A, B, C, D	RM876682	876682	STD	
	RM876683	876683	0.25	
MD2040A, B, C, D	RM876685	876685	STD	
	RM876686	876686	0.25	
AQAD30A MD30A TAMD30A TMD30A AD31A, B, D-A, L-A, P-A, XD AQAD31A TAMD31A, D, B, L-A, M-A, P-A, S-A TMD31A, D, B, L-A MD31A KAD32P-A	REC876511	876511	STD	
MD40A TMD40A, B, C TAMD40A, B AQAD40A, B AQD40A AD41A, B, D, L-A, P-A D41A, B, D, L-A AQAD41A TMD41A, B, D, L-A TAMD41A, B, D, H-A, H-B, P-A, L-A, M-A KAMD42A, B, P-A KAD42A, B, P-A TAMD42B, WJ-A KAM-D43P-A KAD43P-A KAMD44P-A, P-C KAD44P-A, P-B, P-C KAD300-A KAMD300-A	RM876512	876512	0.25	

RETENES BOMBA DE ACEITE — OIL PUMP SEAL — PARAOLIO POMPA L'OLIO — JOINTS DE POMPE A HUILE

new

REF	OEM	
REC469482	469482	D30, 31 D40, 41 D70 D32 D42, 43, 44 D13 D300



new

REF	OEM	
REC976039	976039 980936 1542385 859055	D30, 31 D41 D11, 12, 16, 4, 6, 9 D32 D42, 43, 44 D13 D300



GAS

RETENES | VALVE STEM SEALS | PARAOLIO VALVOLE | JOINTS DE QUEUE DE SOUPAPE

		RETEN SEAL PARAOLIO D'HUILE		ARO O-RING ANELLO TORIQUE	
		REF	OEM	REF	OEM
AQ120B AQ125A, B AQ131A, B, C, D AQ140A AQ145A, B AQ151A, B, C AQ165A AQ170A, B, C	BB140A BB145A BB165A BB170A, B, C 230A, B 250A, B	REC1306630	1306630	REC3514432	3514432
AQ171A, C, 251A		REC3517893	3517860		
3.0GLP-A, -B, -C, -D, -E, -J, -N, 3.0GLM, MDA-A, -B-C 3.0GSP, MDA, -A, -B, -C 3.0HUB, NCA, NCS 3.0GSM-A, -B, -C 3.0HUB, NCA, NCS 3.0GXIC-J 4.3GLMMDA, GSPMDA, GLPHUB, NCA, GSPHUB, HUS, GIPHUSCE, NCACE, NCMCE, CSJNCS, NCM 5.7GLPMDA, GIPMDA, GIPHUS, NCACE, NCMCECE, GLIMDA, GIIMDA, NCSCE				REC26-34217	3854956
740B 7.4GLPMDA, NCA, NCM, M, HUS, GLIMDA, M, HUB, GLPNCS, B, GIPHUSCE, GIIHUBCE, NCCCE, PNCBCE 8.2GLPMDA, M, GLIMDA, M		REC26-75988	3853521		
4.3GLMMDA, GLPMDA, GSPMDA, GSPMDA, GLPHUB, GSPHUB, GSPHUS, GIPHUSCE, GLPNCA, GSJNCS, GSPNCA, GSPNCM, GIPNCACE, GIPNCMCE, GLPLKD, GLPLKE, GSPLKD, GSPLKE, GIPLKDCE, GIPLKECE, GSJLKD 5.7GLPMDA, GIPMDA, GIPMDACE, GLIMDA, GIIMDA, GIPHUS, GIPNCACE, GIPNCMCE, GIINCSCE, GLPK, GSPK, GLIPL		REC70817B	3853226	REC26-34217	3854956
AQ120B, 125, 131, 140, 145, 151, 230A, 250A		REC3514432	3514432		
V6 & V8 VORTEC		REC26-8M0150312	3862362 3857648		


REC1306630


REC3517893


REC70817B


REC3514432


REC26-75988


REC26-34217


REC26-8M0150312

D DIESEL

RETENES | VALVE STEM SEALS | PARAOLIO VALVOLE | JOINTS DE QUEUE DE SOUPAPE

		REF	OEM
MD1B, 2B, 3B AQD2B MD5A, B, C MD7A, B MD11C, D MD17C, D AQAD30A MD30A/ 31A TAMD30A TMD30A AD31B, D-A, L-A, P-A, XD TAMD31B, D, L-A, M-A, P-A, S-A TMD31B, D, L-A	KAD32P-A MD40A TMD40A, B, C AQD40A AQAD40A, B TAMD40A, B, D41B, D, L-A AD41B, D, L-A, P-A TMD41B, D, L-A TAMD41B, D, H-A, H-B, P-A, L-A, M-A KAD42A, B, P-A KAMD42A, B, P-A TAMD42B (OLD STYLE)	REC1306630	1306630
2001,B, AG, BG 2002, B, D, AG, BG 2003, B, D, AG, BG, T, TB, -SOLAS, B-SOLAS, TB-SOLAS AD31A, B, D-A, L-A, P-A, XD AQAD31A MD31A TMD31A, B, D TAMD31A, B, D, L-A, M-A, P-A, S-A TMD31L-A KAD32P-A AD41A, B, D, L-A, P-A D41A, B, D, L-A AQAD41A TMD41A, B, D, L-A TAMD41A, B, D, H-A, H-B, P-A, L-A, M-A KAD42A, B, P-A	KAMD42A, B, P-A TAMD42B, WJ-A KAD43P-A KAMD43P-A TAMD63L-A, P-A TAMD74A-A, A-B, C-A, C-B, L-A, L-B, P-A, P-B TAMD75P-A D9A2A D9-425, -500(R4), -575-MH, -MG D9A2B D9-425, -500(R5), -575-MH D9A2E D9-425 D9A2F D9-575 D9A2C, D, E, F, G, H, J, K D12D-A MH, -A MG, -A MP, -B MH, -C MH, -G MH, -A MP, -B MP, -C MP, -D MP, -E MP, -E MG, -F MP, -G MP, -H MP, -E MH, D12C-A MP (NEW STYLE)	REC859171	21501189
MD2030A, B, C, D MD2040A, B, C, D D1-30, B, F D2-40, B, F	D2-55B, C, D, E, F D2-60F D2-75B, C, F	REC22393048	22393048 3580305 3580306
MD2010A, B, C, D MD2020A, B, C, D	D1-13, B, F D1-20, B, F	REC861860	861860
D3, 4, 6 KAD44 KAMD44	KAD300 KAMD300	REC861700	861700 877072 877073


REC1306630


REC859171


REC22393048


REC861860


REC861700

SISTEMA DE ESCAPE Y ADMISIÓN
EXHAUST & INTAKE SYSTEM
SISTEMA DI SCARICO E ASPIRAZIONE
SYSTEME D'ECHAPPEMENT ET D'ADMISSION

COMPONENTES DE FIJACIÓN · FIXING COMPONENTS · COMPONENTI DI FISSAGGIO · COMPOSANTS DE FIXATION

KIT TORNILLOS COLECTOR · EXHAUST MANIFOLD, BOLTS · VITI COLLETTORE SCARICO · VIS DE COLLECTEUR D'ECHAPPEMENT

REF	OEM			
REC1306341	1306341	AQ120B, 125, 131, 140, 145, 151 230, 250 BB140A, 145A	X 10	



REF	OEM			
REC1317761	1326239	X 3	AQ171, 251	
	1317761	X 7		



new

REF	OEM		
REC838775	838775 1542144 1542019	D30, D31,D 32, D41, D40, D42, D43, D44, D300	



TAPÓN ÁRBOL DE LEVAS · RUBBER WASHER FOR CAMSHAFT · TAPPO ASSE A CAME · BOUCHON ARBRE À CAMES

REF	OEM		
REC1336763	1336763	AQ 125, 145B, 151, 230, 250	



TUERCA DE CULATA CON JUNTA · CYLINDER HEAD NUT WITH GASKET · DADO TESTATA CON GUARNIZIONE · ÉCROU DE CULASSE AVEC JOINT

REF	OEM		
REC994130	1306341 994130	MD1B	X 3
		MB2B, 11C, D	X6
		MB3B, 17C, D	x8



TAPÓN BLOQUE · EXPANSION PLUG · TAPPO BLOCCO MOTORE · PASTILLE DE SABLAGE BLOC MOTEUR

	Ø	REF	OEM
AQ 131, 140B, 145, 151, 230, 250, 251	35	REC463903	463903
	40	REC968955	968955
	42	REC463902	463902
	45	REC192212	463904
	52	REC463905	463905
AQ 175A, 205A, 430A,B, 431A,B V8	26	REC477026	477026
	35	REC477024	477024
B18, 20 V-8 MD5, 6, 7 2001, 2002, 2003 D30, 31, 32, 40, 41, 42, 43, 44, 60, 63, 70, 71, 73, 74, 75, 300	26	REC477026	477026 192426



	Ø	REF	OEM
B18, 25 V-8 MD1, 2, 3, 6, 7, 11, 17 2001, 2002, 2003 D60, 63, 70, 71, 73, 72	35	REC477024	477024 192211 463903
B23, 25 V-8 D9, 11, 13, 16, 30, 31, 32, 40, 41, 42, 43, 44, 63, 71, 72, 73, 74, 300	40	REC968955	968955 1542263
B18, 20	42	REC463902	463902 955103
B18, 20, 30 D21	45	REC192212	192212 463904
B21, 23, 25, 30 D30, 31, 32, 40, 41, 42, 43, 44, 300	52	REC463905	463905

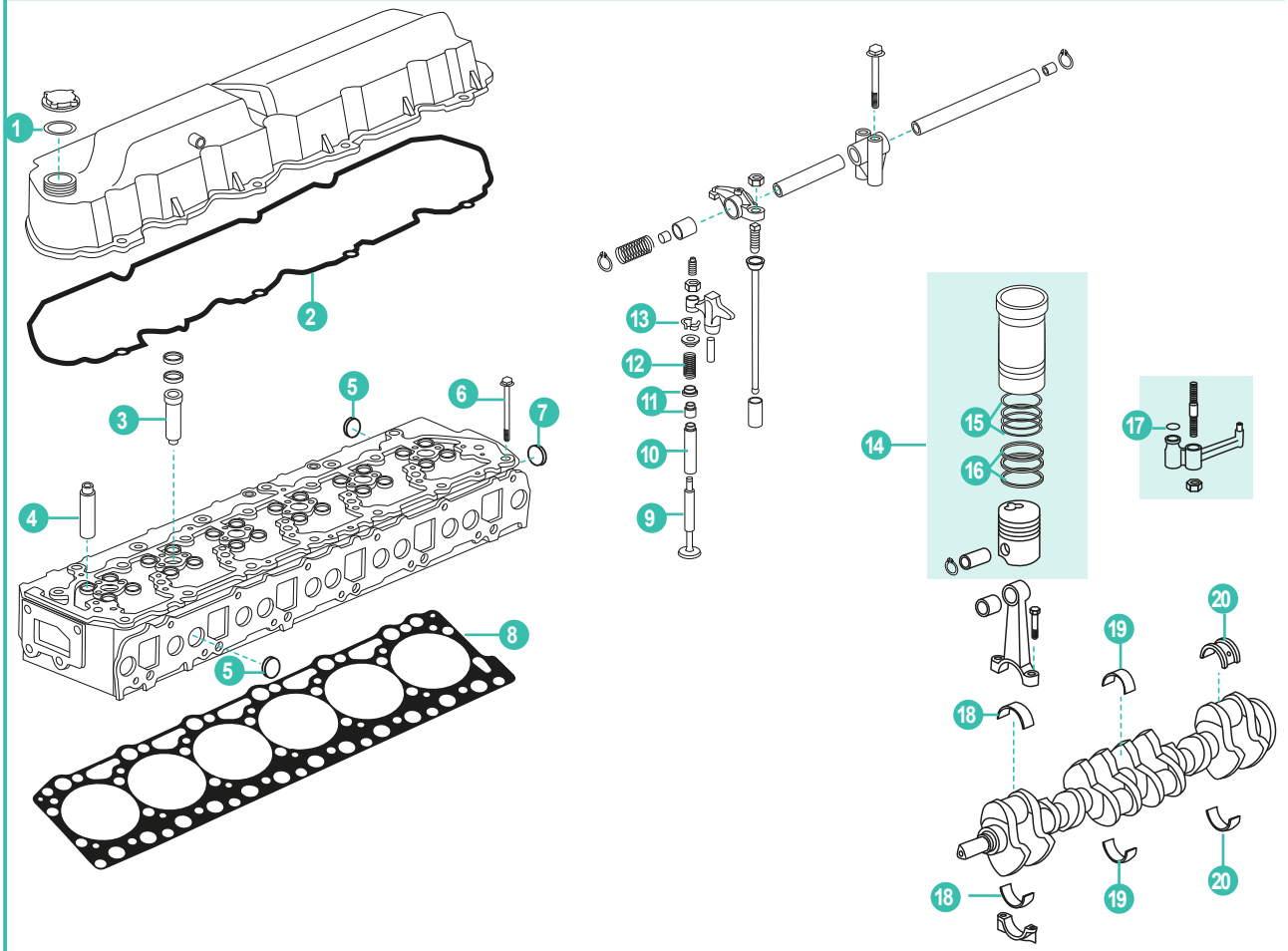

	D30	D31	D32	D40	D41	D42	D43	D44	KAD300	
1	REC1275379	REC1275379	REC1275379	REC1275379	REC1275379	REC1275379	REC1275379	REC1275379	REC1275379	
2	REC1544119	REC838652	REC838652	RM1542287	REC838653	REC838653	REC838653			
3		REC861255			REC861255	REC861255	REC861255	REC861688	REC861688	
		REC3581536	REC3581536		REC3581536	REC3581536	REC3581536			
4	REC3582561	REC3582561	REC3582561	REC3582561	REC3582561	REC3582561	REC3582561			
5	REC477026	REC477026	REC477026	REC477026	REC477026	REC477026	REC477026	REC477026	REC477026	26 mm
6	REC838775	REC838775	REC838775	REC838775	REC838775	REC838775	REC838775	REC838775	REC838775	
7		REC968955	REC968955		REC968955	REC968955	REC968955	REC968955	REC968955	
8	REC859150	REC3582432	REC3582432	REC859155	REC3583786	REC3583786	REC3583786	REC3583786	REC3583786	
9	REC1542472	REC838637	REC838637	REC1542472	REC838637	REC838637	REC838637	REC861698	REC861698	ADMISIÓN INTAKE ASPIRAZIONE ADMISSION
	REC1542389	REC838638	REC838638	REC1542389	REC838638	REC838638	REC838638	REC861699	REC861699	ESCAPE EXHAUST SCARICO ÉCHAPPEMENT
10	REC3582561	REC3582561	REC3582561	REC3582561	REC3582561	REC3582561				
11	REC859171	REC859171	REC859171	REC1306630	REC859171	REC859171	REC859171	REC861700	REC861700	
12	REC1545198	REC1545198	REC1545198	REC1545198	REC1545198	REC1545198	REC1545198			
13	REC419643			REC419643						
14	REC875722	REC876099	REC22185027	REC875722	REC876099	REC22185019	REC3817861	REC3817861	REC3817861	
		REC22389354			REC22389354	REC22185027	REC22185027			
		REC22185027			REC22185027					
15	REC275751	REC275751	REC275751	REC275751	REC275751	REC275751	REC275751	REC275751	REC275751	
16	REC275350	REC275350		REC275350	REC275350	REC876775	REC876775	REC876775	REC876775	
		REC3817033	REC3817033		REC3817033	REC3817033	REC3817033			
17	REC955981	REC955981	REC955981	REC955981	REC955981	REC955981	REC955981	REC955981	REC955981	
18	REC876511	REC876511	REC876511	REC876511	REC876511	REC876511	REC876511	REC876511	REC876511	STD
	RM876512	RM876512	RM876512	RM876512	RM876512	RM876512	RM876512	RM876512	RM876512	025
19	REC876515	REC876515	REC876515	REC876515	REC876515	REC876515	REC876515	REC876515	REC876515	STD
	REC876516	REC876516	REC876516	REC876516	REC876516	REC876516	REC876516	REC876516	REC876516	025
20		REC876519	REC876519		REC876519	REC876519	REC876519	REC876519	REC876519	STD
		REC876520	REC876520		REC876520	REC876520	REC876520	REC876520	REC876520	025

DESPIECES COLECTORES Y CODOS | MANIFOLDS & ELBOWS PARTS | PARTI COLLETTORI E GOMITI | PARTIES COLLECTEURS ET COUDES

AQ115A, B • BB115A, B, C • AQ130A, B, C, D



REF
REC22005

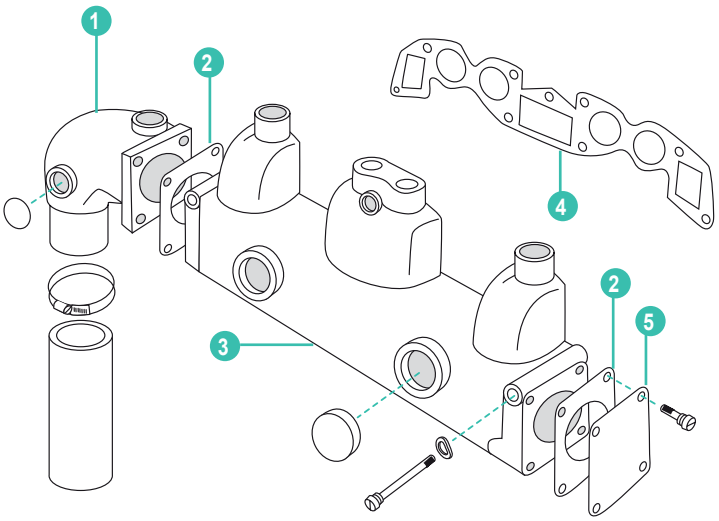

	REF	OEM				
1	HGE5599	825599	CODO ESCAPE	EXHAUST ELBOW	GOMITO SCARICO	COUDE D'ÉCHAPPEMENT
2	REC856028	856028	JUNTA TAPA	GASKET CAP	GUARNIZIONE COPERCHIO	JOINT DE PLAQUE
3	HGE4532	824532	COLECTOR DE ESCAPE	EXHAUST MANIFOLD	COLLETTORE SCARICO	COLLECTEUR D'ÉCHAPPEMENT
4	REC856044	856044	JUNTA COLECTOR ESCAPE	GASKET EXHAUST MANIFOLD	GUARNIZIONE COLLETTORE	JOINT DE COLLECTEUR
5	REC806341	806341	TAPA COLECTOR	CAP	COPERCHIO	PLAQUE DE COLLECTEUR

AQ120B • AQ125A, B • AQ131A, B, C, D • AQ140A • BB140A AQ145A, B • BB145A • AQ151A, B, C • 230A, B • 250A, B



REF
TEN02022T



REF
HOT20930-MK

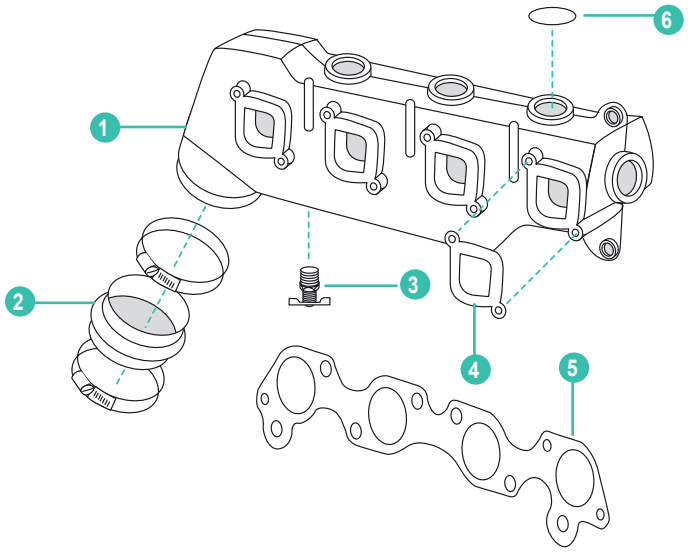

	REF	OEM				
1	HOT20930	855387	COLECTOR ESCAPE	EXHAUST MANIFOLD	COLLETTORE SCARICO	COLLECTEUR D'ÉCHAPPEMENT
2	REC834871	834871	FUELLE ESCAPE COLECTOR	BELLOW	CUFFIA	SOUFFLET
3	REC82745	997641	TAPÓN DRENAJE	FITTING PLUG	TAPPO DI DRENAGGIO	BOUCHON DE VIDANGE
4	REC855967	855967	JUNTA COLECTOR	GASKET MANIFOLD	GUARNIZIONE COLLETTORE	JOINT DE COLLECTEUR
5	REC1378879	1378879	JUNTA COLECTOR ADMISIÓN	GASKET INTAKE MANIFOLD	GUARNIZIONE COLLETTORE ASPIRAZIONE	JOINT DE COLLECTEUR D'ADMISSION
6	REC968955	60112158	TAPÓN	PLUG	TAPPO	BOUCHON

3.0L GM

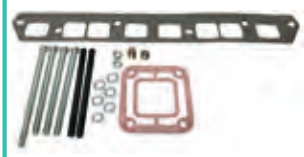

REF
BAOMC-1-3858850P

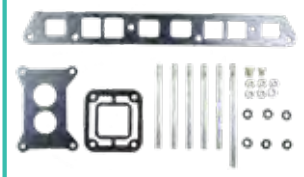

REF
MAR870-MK

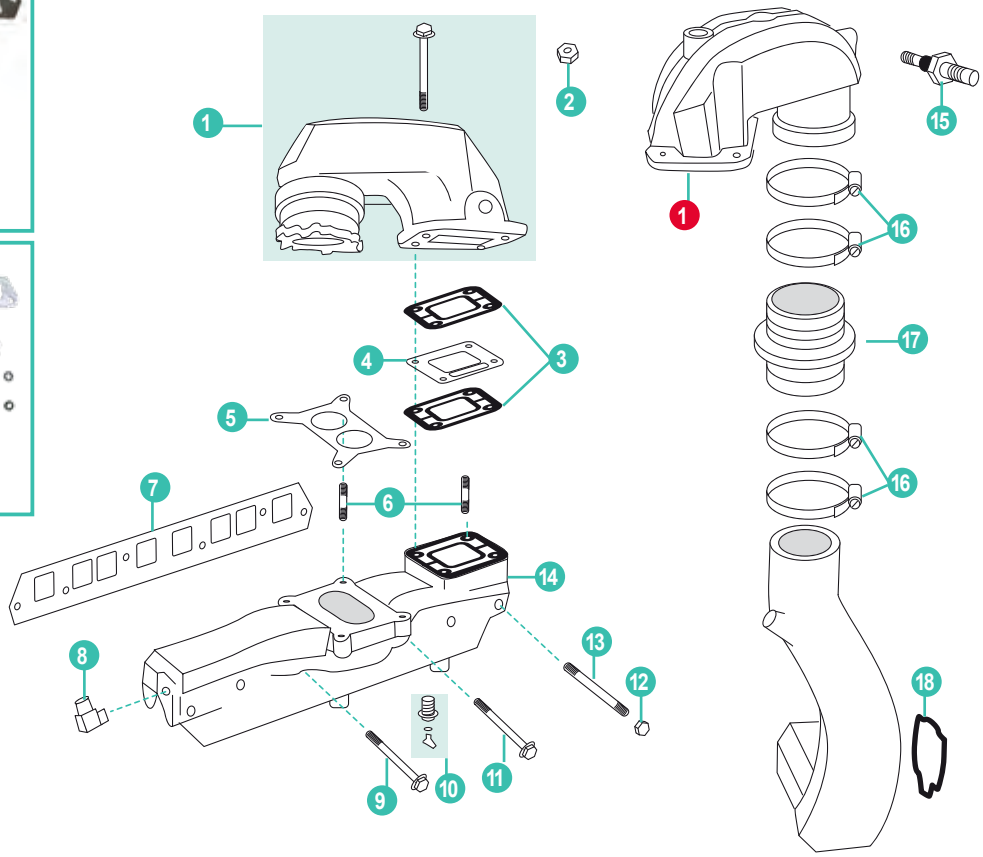

	REF	OEM				
1	BAOMC20-910380	3850799	CODO ESCAPE (3.0L MD)	EXHAUST ELBOW (3.0L MD)	GOMITO SCARICO (3.0L MD)	COUDE D'ÉCHAPPEMENT (3.0L MD)
1	BAOMC-20-3862603	3863071	CODO ESCAPE	EXHAUST ELBOW	GOMITO SCARICO ORIGINALE	COUDE D'ÉCHAPPEMENT
1	MAR684	3588684	CODO ESCAPE (3.0L GLM - C & 3.0L GLP - C/D/E/J/N)	EXHAUST ELBOW (3.0L GLM - C & 3.0L GLP - C/D/E/J/N)	GOMITO SCARICO (3.0L GML - C E 3.0L GLP - C/D/E/J/N)	COUDE D'ÉCHAPPEMENT (3.0L GLM - C & 3.0L GLP - C/D/E/J/N)
2	REC3852142	3852142	TUERCA CODO	NUT - EXHAUST ELBOW	DADO GOMITO	ÉCROU
3	REC3850495	3850495	JUNTA CODO ESCAPE	GASKET - EXHAUST ELBOW	GUARNIZIONE GOMITO SCARICO	JOINT DE COUDE
4	REC3853628	3853628	PLACA INTERMEDIA	INTERMEDIATE PLATE	PIASTRA INTERMEDIA	PLAQUE INTERMEDIAIRE
5	REC3853283	3853283	JUNTA CARBURADOR	GASKET - CARBURETOR	GUARNIZIONE CARBURATORE	JOINT DE CARBURATEUR
6	REC16-70236	3853373	PERNO	STUD - EXHAUST MANIFOLD	PERNO	VIS
7	REC27-815528	3853256	JUNTA COLECTOR ESCAPE	GASKET - EXHAUST MANIFOLD	GUARNIZIONE COLLETTORE SCARICO	JOINT DE COLLECTEUR D'ÉCHAPPEMENT
8	REC3852538	3852538	RÁCOR COLECTOR	ELBOW FITTING - EXHAUST MANIFOLD	RACCORDO COLLETTORE	RACCORD COUDE
9	REC3853430	3853430	TORNILLO	SCREW	VITE	VIS
10	REC13980	3850802	RÁCOR COLECTOR	STRAIGHT FITTING - WATER DRAIN	RACCORDO COLLETTORE	RACCORD COUDE
11	REC3853431	3853431	TORNILLO	SCREW	VITE	VIS
12	REC46335	3853404	TUERCA	LOCKNUT	DADO	ÉCROU
13	REC3853378	3853378	ESPÁRRAGO	STUD - EXHAUST MANIFOLD	PERNO	VIS
14	MAR870	3858870	COLECTOR ESCAPE	EXHAUST MANIFOLD ASSEMBLY	COLLETTORE SCARICO	COLLECTEUR D'ÉCHAPPEMENT
	HGE8870	3858870	COLECTOR ESCAPE	EXHAUST MANIFOLD ASSEMBLY	COLLETTORE SCARICO	COLLECTEUR D'ÉCHAPPEMENT
15	REC3862500	38622500	SENSOR TEMPERATURA	TEMPERATURE SENDER	SENSORE TEMPERATURA	SONDE DE TEMPÉRATURE
16	GS38320	3852604	ABRAZADERA	CLAMP	FASCETA	COLLIER
17	REC3863450	3863450	MANGUITO	EXHAUST HOSE	MANICOTTO	DURITE
18	RM3587651	3587651	JUNTA CUERNO ESCAPE	GASKET EXHAUST PIPE	GUARNIZIONE CORNA DI SCARICO	JOINT DE CORNE D'ECHAPPEMENT

6L AQ 165 & 170 A, B, C



REF
REC22045

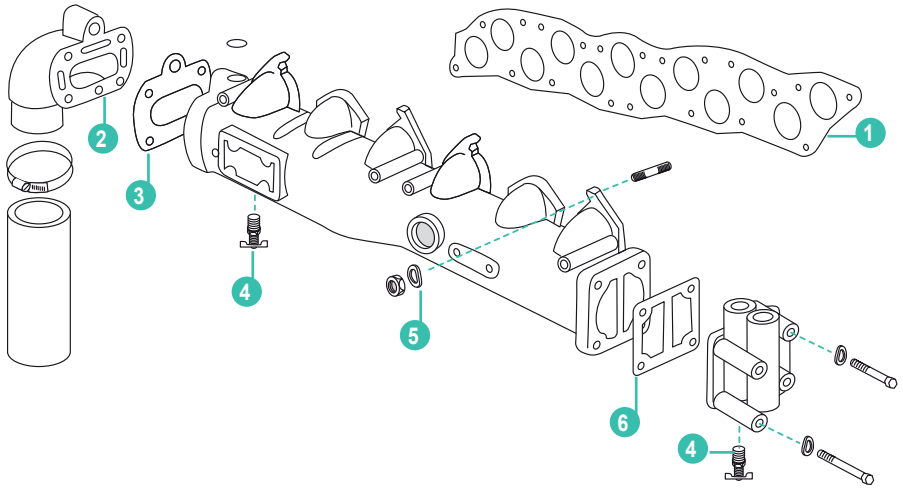

	REF	OEM				
1	REC1378913	461092	JUNTA COLECTOR ADMISIÓN - ESCAPE	GASKET EXHAUST-INTAKE MANIFOLD	GUARNIZIONE COLLETTORE ASPIRAZIONE-SCARICO	JOINT DE COLLECTEUR ADMISSION-ÉCHAPPEMENT
2	RM831834-7	831834	CODO ESCAPE	EXHAUST ELBOW	GOMITO SCARICO	COUDE D'ÉCHAPPEMENT
3	REC856042	856042	JUNTA CODO	ELBOW GASKET	GUARNIZIONE GOMITO	JOINT DE COUDE
4	REC82744	82744	TAPÓN DRENAJE	FITTING PLUG	TAPPO DI DRENAGGIO	BOUCHON DE VIDANGE
5	REC941907	941907	ARANDELA	WASHER	RONDELLA	RONDELLE
6	REC856036	856036	JUNTA TAPA	CAP GASKET	GUARNIZIONE COPERCHIO	JOINT DE PLAQUE

V6 AQ 175 • AQ 205 • AQ430 A/B • 431 A/B • AQ 434 (-1993)



REF
REC22145

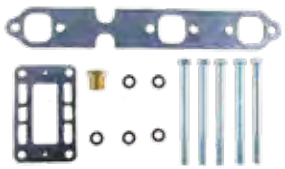

REF
MAR894-MK

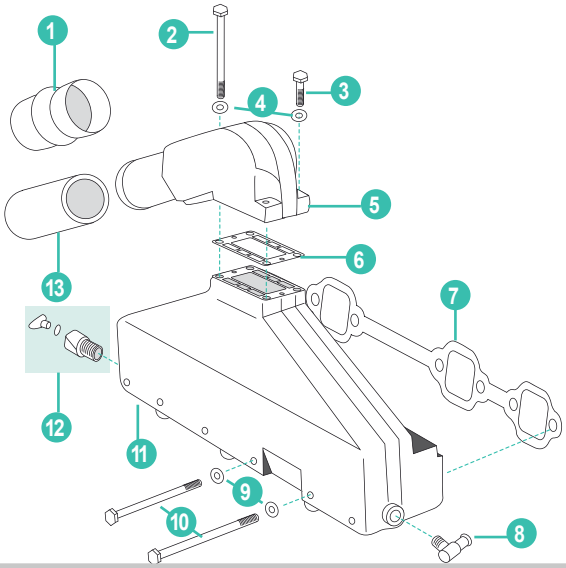

	REF	OEM				
1	REC854935	854935	MANGUITO ESCAPE	EXHAUST HOSE	MANICOTTO SCARICO	DURITE D'ÉCHAPPEMENT
2	REC959796	959796	TORNILLO	SCREW	VITE	VIS
3	REC940136	940136	TORNILLO	SCREW	VITE	VIS
4	REC941907	941907	ARANDELA	WASHER	RONDELLA	RONDELLE
5	HGE7037 MAR037	857037	CODO ESCAPE	EXHAUST ELBOW	GOMITO SCARICO	COUDE D'ÉCHAPPEMENT
6	REC857618	857618	JUNTA CODO ESCAPE NO HGE	GASKET - EXHAUST ELBOW NOT FOR HGE	GUARNIZIONE GOMITO SCARICONO PER HGE	JOINT DE COUDE PAS POUR LES HGE
	HGE35908		JUNTA CODO ESCAPE PARA HGE	GASKET - EXHAUST ELBOW FOR HGE	GUARNIZIONE GOMITO SCARICO PER HGE	JOINT DE COUDE POUR HGE
7	REC27-99757	856116	JUNTA COLECTOR ESCAPE	GASKET - EXHAUST MANIFOLD	GUARNIZIONE COLLETTORE SCARICO	JOINT COLLECTEUR D'ÉCHAPPEMENT
8	REC3852538	3852538	RÁCOR COLECTOR	HOSE FITTING	RACCORDO COLLETTORE	RACCORD COLLECTEUR
9	REC942336	942336	ARANDELA	WASHER	RONDELLA	RONDELLE
10	REC942547	942547	TORNILLO	SCREW	VITE	VIS
11	HGE6894 MAR894	856894	COLECTOR ESCAPE	EXHAUST MANIFOLD	COLLETTORE SCARICO	COLLECTEUR D'ÉCHAPPEMENT
12	REC479956	479956	RÁCOR DRENAJE	FITTING PLUG	RACCORDO DI DRENAGGIO	RACCORD DE VIDANGE
13	REC834751	834751	MANGUITO ESCAPE	EXHAUST HOSE	MANICOTTO SCARICO	DURITE D'ÉCHAPPEMENT

V6 4.3L GM 262 CID (1993+)

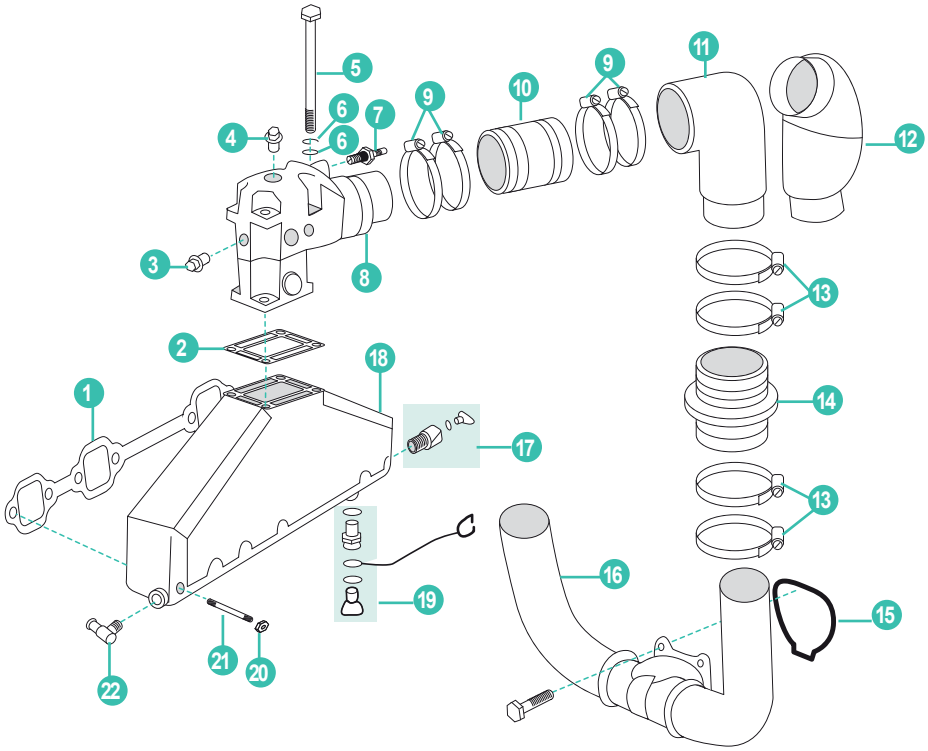



REF
REC53773

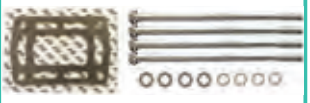

REF
MAR061-MK

RISER 6"



REF	OEM
REC3842853	3842853

8



28.7 cm

8



19.7 cm

8



25.7 cm

	REF	OEM				
1	REC27-99757	3853412	JUNTA COLECTOR ESCAPE	GASKET - EXHAUST MANIFOLD	GUARNIZIONE COLLETTORE SCARICO	JOINT DE COLLECTEUR D'ÉCHAPPEMENT
2	REC3863191	3863191	JUNTA CODO ESCAPE	GASKET - EXHAUST ELBOW	GUARNIZIONE GOMITO SCARICO	JOINT DE COUDE D'ÉCHAPPEMENT
3	REC22-428611	3852135	TAPÓN	PLUG	TAPPO	BOUCHON
4	REC22-73379	3850740	TAPÓN	PLUG	TAPPO	BOUCHON
5	REC3852830	3852830	TORNILLO	SCREW	VITE	VIS
6	REC13-35048	3852002 3852058	ARANDELA	GROOVER	RONDELLA	RONDELLE
7	REC3862500	3862500	SENSOR TEMPERATURA	TEMPERATURE SENSOR	SENSORE TEMPERATURA	SONDE DE TEMPÉRATURE
8	MAR061	3863061	CODO ESCAPE 19.7cm	EXHAUST ELBOW 19.7cm	GOMITO SCARICO 19.7cm	COUDE D'ÉCHAPPEMENT 19.7 mm
	REC3889964 MAR964	3889964	CODO ALTO 25.7 cm	EXHAUST ELBOW 25.7 cm	GOMITO SCARICO 25.7 cm	COUDE D'ÉCHAPPEMENT 25.7 mm
	MAR627	3862627	CODO ALTO 28.7 cm	EXHAUST ELBOW 28.7 cm	GOMITO SCARICO 28.7 cm	COUDE D'ÉCHAPPEMENT 28.7 mm
9	GS38322	3863443	ABRAZADERA	CLAMP	FASCETTA	COLLIER
10	REC3852696	3852696	MANGUITO ESCAPE	EXHAUST HOSE	MANICOTTO SCARICO	DURITE D'ECHAPPEMENT
11	RM3863189	3863189	CURVA ESCAPE	EXHAUST CURVE	CURVA SCARICO	COUDE ECHAPPEMENT
12	RM3854874	3854874	CURVA ESCAPE 4.3L COLA SX	EXHAUST CURVE	CURVA SCARICO 4.3L PIEDE SX	COUDE ECHAPPEMENT 4.3L EMBASE SX
13	GS38320	3852604	ABRAZADERA	CLAMP	FASCETTA	COLLIER
14	REC3863450	3863450	MANGUITO ESCAPE	EXHAUST HOSE	MANICOTTO SCARICO	DURITE D'ECHAPPEMENT
15	RM3587651	3587651	JUNTA ESCAPE	EXHAUST GASKET	GUARNIZIONE SCARICO	JOINT DE CORNE
16	RM3858873	3858873	CUERNOS ESCAPE SX	EXHAUST TUBO SX	CORNA DI SCARICO SX	CORNE D'ECHAPPEMENT SX
17	REC479956	479956	RÁCOR COLECTOR	STRAIGHT FITTING KIT	RACCORDO COLLETTORE	RACCORD COLLECTEUR
18	MAR499	3847499	COLECTOR ESCAPE	EXHAUST MANIFOLD ASSEMBLY	COLLETTORE SCARICO	COLLECTEUR D'ÉCHAPPEMENT
19	REC38201	21114522	KIT TAPÓN DRENAJE	FITTING PLUG KIT	KIT TAPPO DI DRENAGGIO	KIT BOUCHON VIDANGE
20	REC46335	3853404	TUERCA	NUT	DADO	ÉCROU
21	REC3852467	3852467	ESPÁRRAGO	STUD	VITE	VIS
22	REC3852538	3852538	RÁCOR CODO	ELBOW FITTING	RACCORDO GOMITO	RACCORD COUDE

AQ & BB 200, 205, 211, 231, 225, 260, 271, 290, 311, 500, 501, 570, 571, 572 GM 305/350 CID, (-1993)



REF	OEM
REC834751	834751



REF
HOT20931-MK



REF
HOT20935-MK

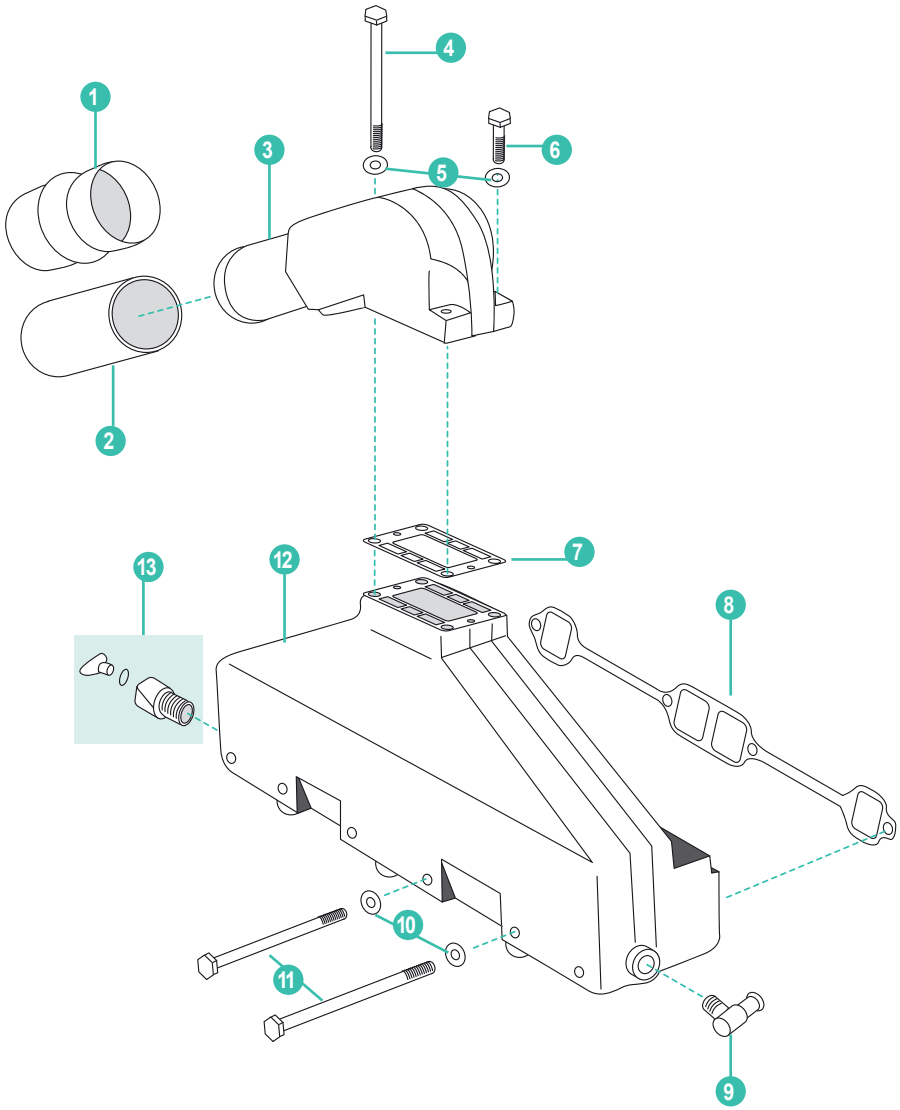

	REF	OEM				
1	REC854935	854935	MANGUITO ESCAPE	EXHAUST HOSE	MANICOTTO SCARICO	DURITE D'ÉCHAPPEMENT
2	REC834751	834751	MANGUITO ESCAPE	EXHAUST HOSE	MANICOTTO SCARICO	DURITE D'ÉCHAPPEMENT
3	HOT20935	856891	CODO ESCAPE	EXHAUST ELBOW ASSEMBLY	GOMITO SCARICO	COUDE D'ÉCHAPPEMENT
4	REC959794	959794	TORNILLO	SCREW	VITE	VIS
5	REC941907	941907	ARANDELA	WASHER	RONDELLA	RONDELLE
6	REC940136	940136	TORNILLO	SCREW	VITE	VIS
7	REC857618	857618	JUNTA CODO ESCAPE	GASKET - EXHAUST ELBOW	GUARNIZIONE GOMITO SCARICO	JOINT DE COUDE D'ÉCHAPPEMENT
8	REC27-33395	856034	JUNTA COLECTOR ESCAPE	GASKET - EXHAUST MANIFOLD	GUARNIZIONE COLLETTORE SCARICO	JOINT DE COLLECTEUR D'ÉCHAPPEMENT
9	REC3852538	3852538	RÁCOR COLECTOR	HOSE FITTING	RACCORDO GOMITO	RACORD DE COLLECTEUR
10	REC942336	942336	ARANDELA	WASHER	RONDELLA	RONDELLE
11	REC942547	942547	TORNILLO	SCREW	VITE	VIS
12	HOT20931	856883	COLECTOR ESCAPE	EXHAUST MANIFOLD ASSEMBLY	COLLETTORE SCARICO	COLLECTEUR D'ÉCHAPPEMENT
13	REC479956	479956	RÁCOR DRENAJE	STRAIGHT FITTING KIT	RACCORDO DI DRENAGGIO	RACCORD DE VIDANGE

V8 5.0/5.7L GM305 & GM 350 CID (1993+)

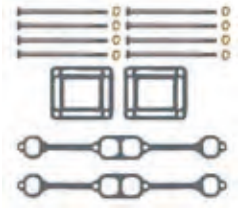

REF
REC53911



REF
MAR501-MK

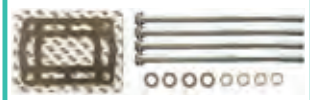

REF
MAR061-MK

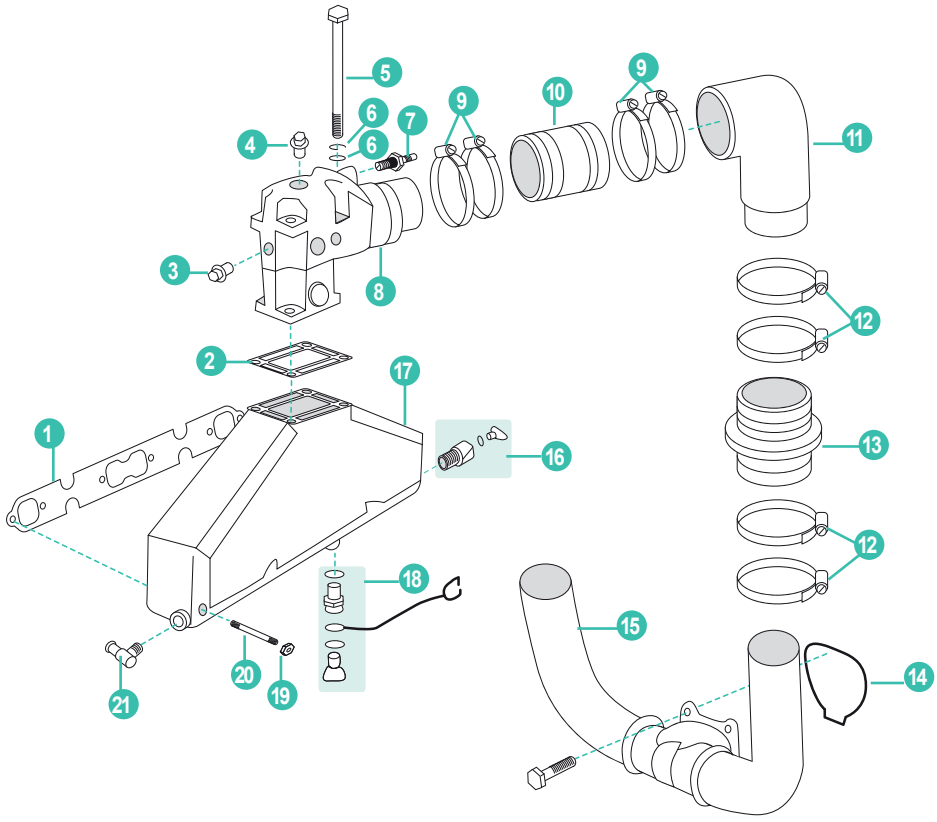

RISER 6"



REF	OEM
REC3842853	3842853

8



28.7 cm

8



19.7 cm

8



25.7 cm

	REF	OEM				
1	REC27-33395	3852468	JUNTA COLECTOR ESCAPE	GASKET - EXHAUST MANIFOLD	GUARNIZIONE COLLETTORE SCARICO	JOINT DE COLLECTEUR D'ÉCHAPPEMENT
2	REC3863191	3863191	JUNTA CODO ESCAPE	GASKET - EXHAUST ELBOW	GUARNIZIONE GOMITO SCARICO	JOINT DE COUDE D'ÉCHAPPEMENT
3	REC22-428611	3852135	TAPÓN	PLUG	TAPPO	BOUCHON
4	REC22-73379	3850740	TAPÓN	PLUG	TAPPO	BOUCHON
5	REC3852830	3852830	TORNILLO	SCREW	VITE	VIS
6	REC13-35048	3852002 3852058	ARANDELA	GROOVER	RONDELLA	RONDELLE
7	REC3862500	3862500	SENSOR TEMPERATURA	TEMPERATURE SENSOR	SENSORE TEMPERATURA	SONDE DE TEMPÉRATURE
8	MAR061	3863061	CODO ESCAPE 19.7cm	EXHAUST ELBOW 19.7cm	GOMITO SCARICO 19.7cm	COUDE D'ÉCHAPPEMENT 19.7 mm
	REC3889964 MAR964	3889964	CODO ALTO 25.7 cm	EXHAUST ELBOW 25.7 cm	GOMITO SCARICO 25.7 cm	COUDE D'ÉCHAPPEMENT 25.7 mm
	MAR627	3862627	CODO ALTO 28.7 cm	EXHAUST ELBOW 28.7 cm	GOMITO SCARICO 28.7 cm	COUDE D'ÉCHAPPEMENT 28.7 mm
9	GS38322	3863443	ABRAZADERA	CLAMP	FASCETTA	COLLIER
10	REC3852696	3852696	MANGUITO ESCAPE	EXHAUST HOSE	MANICOTTO SCARICO	DURITE D'ECHAPPEMENT
11	RM3863189	3863189	CURVA ESCAPE MODERNO	EXHAUST CURVE	CURVA SCARICO MODERNO	COUDE ECHAPPEMENT MODENE
12	GS38320	3852604	ABRAZADERA	CLAMP	FASCETTA	COLLIER
13	REC3863450	3863450	MANGUITO ESCAPE	EXHAUST HOSE	MANICOTTO SCARICO	DURITE D'ECHAPPEMENT
14	RM3587651	3587651	JUNTA ESCAPE	EXHAUST GASKET	GUARNIZIONE SCARICO	JOINT DE CORNE
15	RM3858873	3858873	CUERNOS ESCAPE SX	EXHAUST TUBO SX	CORNA DI SCARICO SX	CORNE D'ECHAPPEMENT SX
16	REC479956	479956	RÁCOR DRENAJE	STRAIGHT FITTING KIT	RACCORDO DI DRENAGGIO	RACCORD DE VIDANGE
17	MAR501	3847501	COLECTOR ESCAPE	EXHAUST MANIFOLD ASSEMBLY	COLLETTORE SCARICO	COLLECTEUR D'ÉCHAPPEMENT
18	REC38201	38201	KIT TAPÓN DRENAJE	FITTING PLUG KIT	KIT TAPPO DI DRENAGGIO	KIT BOUCHON DE VIDANGE
19	REC46335	3853404	TUERCA	NUT	DADO	ÉCROU
20	REC3852467	3852467	PERNO	STUD	VITE	VIS
21	REC3852538	3852538	RÁCOR COLECTOR	ELBOW FITTING	RACCORDO COLLETTORE	RACCORD DE COLLECTEUR

5.0/5.8L & FI/FSI FORD 302/351 CID V8 (1993+)

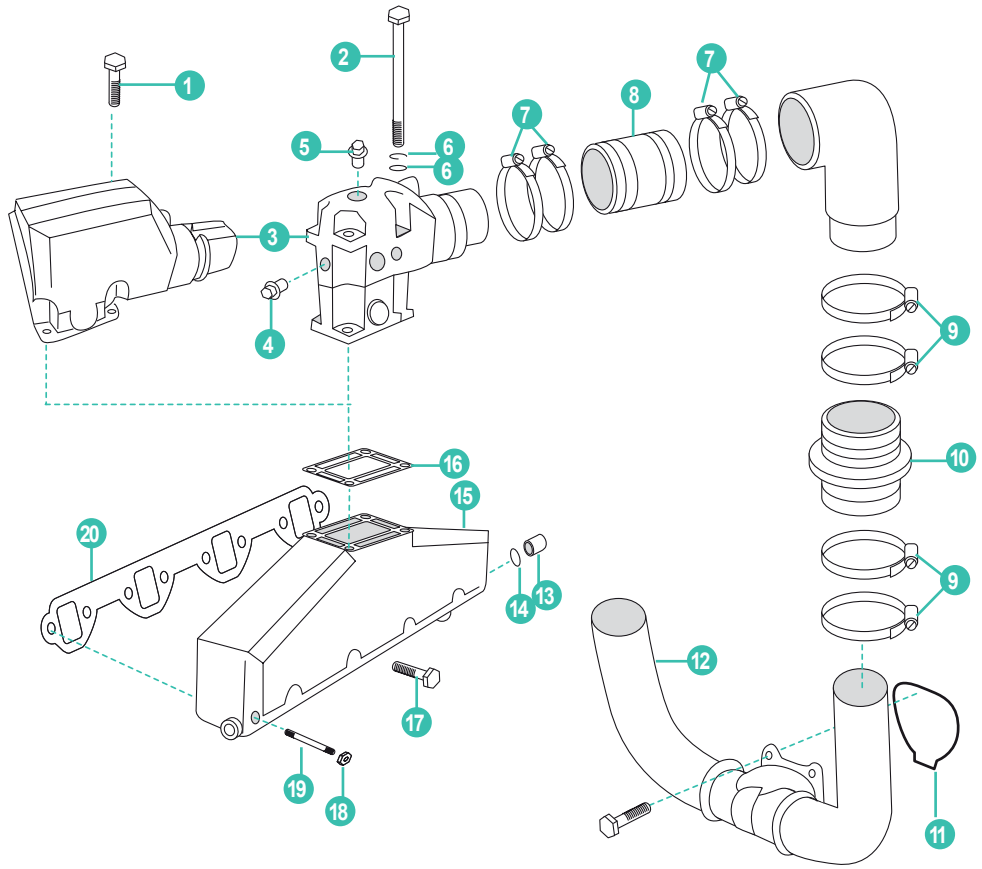

	REF	OEM				
1	REC10-37612	3855983	TORNILLO (1993-96 EFI)	SCREW (1993-96 EFI)	VITE (1993-96 EFI)	VIS (1993-96 EFI)
2	REC3852830	3852830	TORNILLO (1988-96 CARBURACION)	SCREW (1988-96 CARBURATION)	VITE (1988-96 CARBURATORE)	VIS (1988-96 CARB)
	MAR061	3863061	CODO ESCAPE 19.7 cm	EXHAUST ELBOW ASSEMBLY 19.7 cm	GOMITO SCARICO 19.7 cm	COUDE D'ÉCHAPPEMENT 19.7 mm
3	REC3855271	3855271	CODO ESCAPE EFI BABOR	EXHAUST ELBOW - PORT (EFI)	GOMITO SCARICO EFI BABORDO	COUDE D'ÉCHAPPEMENT EFI (BABORD)
	REC3855269	3855269	CODO ESCAPE EFI ESTRIBOR	EXHAUST ELBOW - STBD (EFI)	GOMITO SCARICO EFI TRIBORDO	COUDE D'ÉCHAPPEMENT EFI (TRIBORD)
4	REC22-428611	3852135	TAPÓN	PLUG	TAPPO	BOUCHON
5	REC22-73379	3850740	TAPÓN	PLUG	TAPPO	BOUCHON
6	REC13-35048	3852002 3852058	CIERRE	LOCKWASHER	CHIUSURA	RONDELLE
7	GS38322	3863443	ABRAZADERA	CLAMP	FASCETTA	COLLIER
8	REC3852696	3852696	MANGUITO ESCAPE	EXHAUST HOSE	MANICOTTO SCARICO	DURITE D'ÉCHAPPEMENT
9	GS38320	3852604	ABRAZADERA	CLAMP	FASCETTA	COLLIER
10	REC3863450	3863450	MANGUITO ESCAPE	EXHAUST HOSE	MANICOTTO SCARICO	DURITE D'ÉCHAPPEMENT
11	RM3587651	3587651	JUNTA ESCAPE	EXHAUST GASKET	GUARNIZIONE SCARICO	JOINT D'E CORNE
12	RM3858873	3858873	CUERNOS ESCAPE SX	EXHAUST TUBO SX	CORNA DI SCARICO SX	CORNE D'ECHAPPEMENT SX
13	REC3852476	3852476	TAPA	CAP	COPERCHIO	COUVERCLE
14	REC3852602	3852602	ABRAZADERA	CLAMP	FASCETTA	COLLIER
15	BAOMC1-3852347	3852347	COLECTOR ESCAPE	EXHAUST MANIFOLD ASSEMBLY	COLLETTORE SCARICO	COLLECTEUR D'ÉCHAPPEMENT
16	REC3863191	3863191	JUNTA CODO ESCAPE	GASKET - EXHAUST ELBOW	GUARNIZIONE GOMITO SCARICO	JOINT DE COUDE D'ÉCHAPPEMENT
17	REC10-37612	3853155	TORNILLO	SCREW	VITE	VIS
18	REC46335	3853404	TUERCA	NUT	DADO	ÉCROU
19	REC3853434	3853434	ESPÁRRAGO	STUD	PERNO	VIS
20	REC3852455	3852455	JUNTA COLECTOR ESCAPE	GASKET - EXHAUST MANIFOLD	GUARNIZIONE COLLETTORE SCARICO	JOINT DE COLLECTEUR D'ÉCHAPPEMENT

V8 7.4/8.2 GM 454/502 CID (1992+)

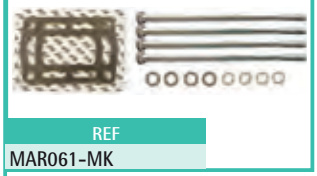

REF
MAR061-MK



28.7 cm

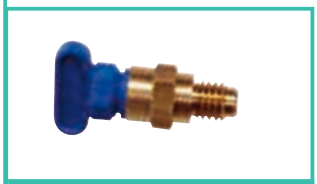

REC38201 21114522

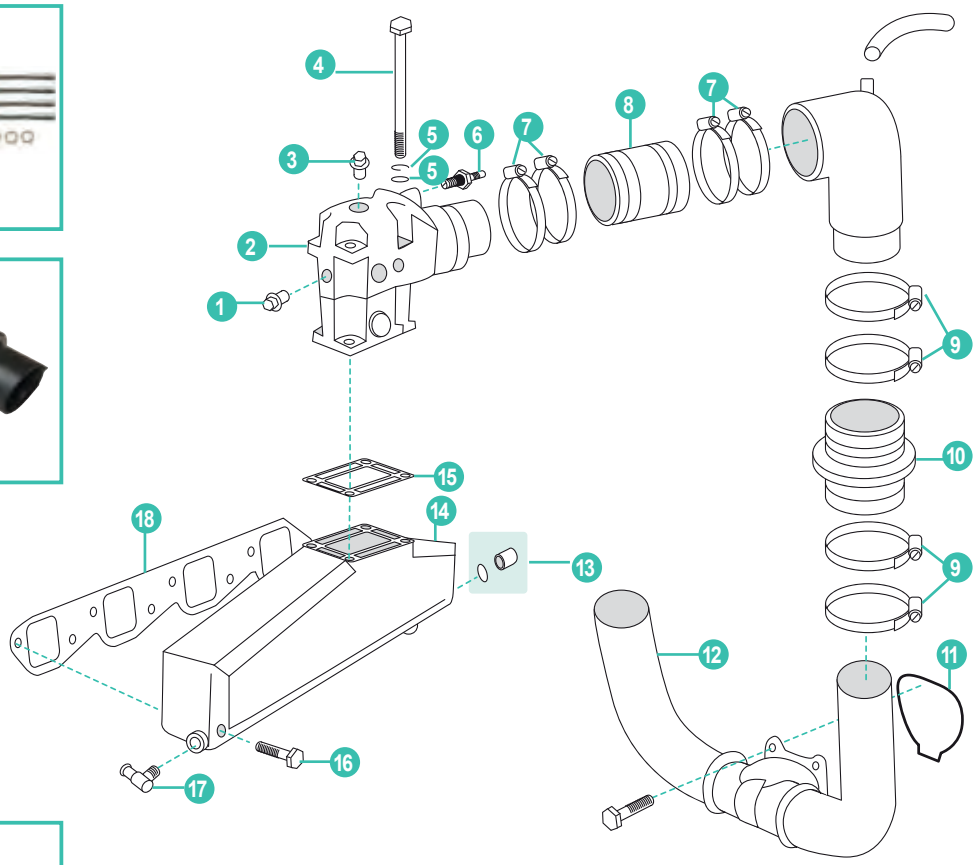

	REF	OEM				
1	REC22-428611	3852135	TAPÓN	PLUG	TAPPO	BOUCHON
	MAR061	3863061	CODO ESCAPE 19.7 cm	EXHAUST ELBOW ASSEMBLY 19.7 cm	GOMITO SCARICO 19.7 cm	COUDE D'ÉCHAPPEMENT 19.7 mm
2	MAR627	3862627	CODO ESCAPE ALTO 28.7 cm	EXHAUST ELBOW HIGH 28.7 cm	GOMITO SCARICO ALTO 28.7 cm	COUDE D'ÉCHAPPEMENT 28.7 mm
	REC3889964 MAR964	3889964	CODO ESCAPE ALTO 25.7 cm	EXHAUST ELBOW HIGH 25.7 cm	GOMITO SCARICO ALTO 25.7 cm	COUDE D'ÉCHAPPEMENT 25.7 mm
3	REC22-73379	3850740	TAPÓN	PLUG	TAPPO	BOUCHON
4	REC3852830	3852830	TORNILLO	SCREW	VITE	VIS
5	REC13-35048	3852002 3852058	CIERRE	LOCKWASHER	CHIUSURA	RONDELLE
6	REC3862500	3862500	SENSOR TEMPERATURA	TEMPERATURE SENSOR	SENSORE TEMEPERATURA	SONDE DE TÉMPÉRATURE
7	GS38322	3863443	ABRAZADERA	CLAMP	FASCETTA	COLLIER
8	REC3852696	3852696	MANGUITO ESCAPE	EXHAUST HOSE	MANICOTTO SCARICO	DURITE D'ÉCHAPPEMENT
9	GS38320	3852604	ABRAZADERA	CLAMP	FASCETTA	COLLIER
10	REC3863450	3863450	MANGUITO ESCAPE	EXHAUST HOSE	MANICOTTO SCARICO	DURITE D'ÉCHAPPEMENT
11	RM3587651	3587651	JUNTA ESCAPE	EXHAUST GASKET	GUARNIZIONE SCARICO	JOINT DE CORNE
12	RM3858873	3858873	CUERNOS ESCAPE SX	EXHAUST TUBO SX	CORNA DI SCARICO SX	CORNE D'ÉCHAPPEMENT SX
13	REC479956	479956	RÁCOR COLECTOR	STRAIGHT FITTING KIT	RACORDO COLLETTORE	RACCORD DE COLLECTEUR
14	RM3861459	3861459	COLECTOR ESCAPE	EXHAUST MANIFOLD ASSEMBLY	COLLETTORE SCARICO	COLLECTEUR D'ÉCHAPPEMENT
15	REC3863191	3863191	JUNTA CODO ESCAPE	GASKET - EXHAUST ELBOW	GUARNIZIONE GOMITO SCARICO	JOINT DE COUDE D'ÉCHAPPEMENT
16	REC10-37612	3855983	TORNILLO	SCREW	PERNO	VIS
17	REC3852538	3852538	RÁCOR CODO	ELBOW FITTING	RACORDO GOMITO	RACORD COUDE
18	REC27-46820	3852472	JUNTA COLECTOR ESCAPE	GASKET - EXHAUST MANIFOLD	GUARNIZIONE COLLETTORE SCARICO	JOINT DE COLLECTEUR D'ÉCHAPPEMENT

COLECTOR ADMISIÓN — INTAKE MANIFOLD — COLLETTORE ASPIRAZIONE — COLLECTEUR D'ADMISSION

TAPA DE COLECTOR — END CAP MANIFOLD — COPERCHIO COLLETTORE — COLLECTEUR

REF	OEM			
MP425024	3855805	8	GM 262, 4.3 (V6) VORTEC (2 bbl) Fe (1993+)	REC824326002



REF	OEM			
MP425113	3854100	16	740A, B 7.4 GLP	REC17340



REF	OEM			
MP425036	3855806	8	GM 262, 4.3 (V6) VORTEC (4 bbl) Fe (1993+)	REC824326002



VÁLVULA ADMISIÓN Y ESCAPE — INTAKE & EXHAUST VALVES — VALVOLE ASPIRAZIONE E SCARICO — SOUPAPES D'ADMISSION ET ÉCHAPEMENT

GAS

	ADMISIÓN INTAKE ASPIRAZIONE ADMISSION	ESCAPE EXHAUST SCARICO ÉCHAPPEMENT	GUÍA ADM. INTAKE GUIDE GUIDA ASPIR. GUIDE ADM.	GUÍA ESCAPE EXHAUST GUIDE GUIDA SCARICO GUIDE ÉCHAPP.	RETÉN VÁLVULA SEAL VALVE TENUTA VALVOLA JOINT HUILE SOUPAPE	MUELLE SPRING MOLLA RESSORT	CIERRE LOCK CHIUSURA CLAVETTE	EMPUJADOR LIFTER LIFTER CLAPET
AQ115A,B,C AQ120B	REC463395 44 mm	REC463526 35 mm	REC3582606 52x13,5x8mm	REC3582609 52x13,5x8mm	REC1306630	REC463739	REC419643	REC1218630
AQ125A,B AQ131A,B,C,D AQ140A, BB140A AQ145A,B BB145A 230A,B, 250A,B	OEM 463395	OEM 463526	OEM 419652	OEM 463371	OEM 1306630	OEM 463739	OEM 419643	OEM 418423
AQ115A,B BB115A,B,C AQ130A,B,C,D AQ165A, BB165A AQ170A, BB170A MB20A,B,C	REC419734 42mm OEM 419734	REC419735 35mm OEM 419735	REC3582606 52x13,5x8mm OEM 419652	REC3582561 OEM 419653	REC1306630 OEM 1306630	REC418737 OEM 418737	REC419643 OEM 419643	
AQ171A,C 251A	REC1317793 34,5mm OEM 1317793	REC1317792 31,5mm OEM 1317792	REC3582608 55x12x7mm OEM 1378960	REC3582608 55x12x7mm OEM 1378960	REC3517893 OEM 3517860	OEM	OEM	OEM

DIESEL

	ADMISIÓN INTAKE ASPIRAZIONE ADMISSION	ESCAPE EXHAUST SCARICO ÉCHAPPEMENT	GUÍA VÁLVULA VALVE GUIDE GUIDA VALVOLA GUIDE SOUPAPE	RETÉN VÁLVULA SEAL VALVE TENUTA VALVOLA JOINT QUEUE DE SOUPAPE	MUELLE SPRING MOLLA RESSORT	CIERRE LOCK CHIUSURA CLAVETTE
MD1B, 2B, 3B MD11C, D MD17C, D	REC833188 38mm OEM 833188	REC829620 34mm OEM 892260	OEM	REC1306630 OEM 1306630	OEM	OEM
MD22A, A-A, L-A, L-B, P-B TMD22A, -A, -B, P-C TAMD22P-B	RM859650 OEM 859650	RM859656 OEM 859656	OEM	OEM	OEM	OEM
MD2010A, B, C, D MD2020A, B, C, D	RM861858 OEM 861858	RM861859 OEM 861859	OEM	REC861860 OEM 861860	OEM	OEM
MD2030A, B, C,D	RM3580303 OEM 3580303	RM3580304 OEM 3580304	OEM	REC22393048 OEM 3580305	OEM	OEM
AQAD30A, MD30A, TAMD30A, TMD30A MD40A, TMD40A, B, C, AQD40A, TAMD40A, B AQAD40A, B	REC1542472 42mm OEM 1542472	REC1542389 36mm OEM 1542389	OEM	REC1306630 OEM 1306630	REC1545198 OEM 1545198	REC419643 OEM 419643

	ADMISIÓN INTAKE ASPIRAZIONE ADMISSION	ESCAPE EXHAUST SCARICO ÉCHAPPEMENT	GUÍA VÁLVULA VALVE GUIDE GUIDA VALVOLA GUIDE SOUPAPE	RETÉN VÁLVULA SEAL VALVE TENUTA VALVOLA JOINT QUEUE DE SOUPAPE	MUELLE SPRING MOLLA RESSORT	CIERRE LOCK CHIUSURA CLAVETTE
AQAD31A AD31A, B, L-A, P-A, D-A, XD TAMD31A, B, D, L-A, M-A, P-A, S-A TMD31A, B, D, L-A, MD31A KAD32P-A AQAD41A AD41A, B, D, L-A, P-A D41A, B, D, L-A TAMD41A, B, D, H-A, H-B, P-A, L-A, M-A TMD41A, B, D, L-A KAD42A, B, P-A, KAMD42A, B, P-A, TAMD42B, WJ-A KAD43P-A, KAMD43P-A	**REC838637** 39 mm OEM 833637	**REC838638** 37 mm OEM 838638	**REC3582561** 59x13,5x8mm OEM 419653	**REC859171** OEM 21501189	**REC1545198** OEM 1545198	OEM
D1-13A, B, F D1-20A, B, F	**RM3809662** OEM 3809662	**RM861859** OEM 861859	OEM	**REC22393048** OEM 22393048	OEM	OEM
D1-30A, B, F D2-40A, B, F	**RM3884528** OEM 3884528	**RM3580304** OEM 3580304	OEM	OEM	OEM	OEM
D2-55A, B, C, D, E, F D2-60F D2-75A, B, C, F MD2040A, B, C, D	**RM21186281** OEM 3580478	**RM21186282** OEM 21307714	OEM	**REC22393048** OEM 22393048	OEM	OEM
D3-110I-G, I-A, I-B, I-C, I-D, I-E, I-F, I-H D3-130A-A, A-B, A-C, I-A, I-B, I-C D3-140A-D, A-F, A-E, A-G, A-H, I-E, I-F, I-G, I-H D3-150I-D, I-E, I-F, I-G, I-H D3-160A-A, A-B, A-C, I-A, I-B, I-C D3-170A-D, A-E, A-F, A-G, A-H, I-D, I-E, I-F, I-G, I-H D3-190A-B, A-C, I-B, I-C D3-200A-D, A-E, A-F, A-G, A-H, I-D, I-E, I-F, I-G, I-H D3-220A-D, A-E, A-F, A-G, A-H, I-D, I-E, I-F, I-G, I-H	**RM8631650** OEM 8631650	 OEM 8631651	OEM	**REC8631652** OEM 8631652 861700 877072 877073 8631652	OEM	OEM
D4-180I-B, I-C, I-D, I-E, I-F D4-210A-A, I-A, I-B D4-225A-E, A-C, A-D, A-F, I-B, I-C, I-D, I-E, I-F D4-260A-A, A-B, A-C, A-D, A-E, A-F, D-B, D-C, D-E, D-D, D-F, I-A, I-B, I-C, I-D, I-E, I-F D4-300A-A, A-C, A-D, A-E, A-F, D-A, D-C, D-D, D-E, D-F, I-A, I-C, I-D, I-E, I-F D6-280A-A, A-B, A-C, A-D, A-E, I-A, I-B, I-C, I-D, I-E D6-300A-F, D-F(MC), I-F D6-310A-A, A-B, A-C, A-D, A-E, D-B, D-C, D-E, D-D, I-A, I-B, I-C, I-D, I-E D6-330A-B, A-C, A-D, A-E, A-F, D-B, D-C, D-D, D-E, D-F, I-B, I-C, I-D, I-E, I-F D6-350A-A, A-B D6-370A-B, A-C, A-D, A-E, A-F, D-B, D-C, D-D, D-E, D-F, I-A, I-B, I-C, I-D, I-E, I-F D6-400A-E, A-F D6-435D-A, D-D, D-C, D-E, D-F, I-A, I-C, I-D, I-E, I-SC-F, I-WJ-F	**RM3884010** OEM 3884010	**RM3884015** OEM 3884015	OEM	**REC861700** OEM 861700 877072 877073	**REC3581889** OEM 3581889	OEM
D9A2A D9-425, 500(R4), 575 D9A-MH, MG D9A2B D9-425, 500(R5), 575, MH D9A2C, D9A2E D9-425 D9A2F D9-575 D9A2G, H, J, K D11A-A, A-B, A-C, A-D, A-E, A-C(IPS), A-D(IPS) B1-A MP D11B2-A MP(IPS) D12D-A MH,-A MP,-B MH,-C MH,-G MH,-A MP,-B MP,-C MP,-D MP,-E MH,-E MP,-F MP,-G MP,-G MH,-H MP D12C-A MP, D12D-A MG,-E MG	OEM	OEM	OEM	OEM	**REC3183211** **REC21310068** OEM 3183211 21310068	OEM
D16C-A, MH,-A, MG,-B, MB,-C, MH	**REC20739057** OEM 20739057	**REC20513285** OEM 20513285	OEM	OEM	OEM 22527820	OEM
KAD44P-A, P-B, P-C, KAMD44P-A, P-C KAD300-A, KAMD300-A	**REC861698** OEM 861698	**REC861699** OEM 861699	OEM	**REC861700** OEM 861700	**REC1545198** OEM 1545198	OEM
THAMD70C, AQD70D,CL TMD70C, TAMD70C, D, E, MD70C TAMD71A, B, TAMD72A, P-A, WJ-A TAMD73P-A, WJ-A	OEM 466379	**REC842080** OEM 842080	OEM 466386	**REC466384** **REC466383** OEM 466384 466383	**REC468305** OEM 468305	**REC466382** OEM 466382

LIFTER LIFTER LIFTER POUSSOIR HYDRAULIQUE

	REF	OEM
AQ 60, 90, 95, 100, 105, 115, 120A, 130, 165, 170	**REC1218630**	1218630



GUÍAS | GUIDE | SEDE | GUIDE

	ADMISIÓN INTAKE ASPIRAZIONE ADMISSION	OEM	ESCAPE EXHAUST SCARICO ÉCHAPPEMENT	OEM	
AQ120B, 125, 131, 140, 145, 151, 230, 250	REC3582606	3582606	REC3582609	3582609	
AQ171, 251	REC3582608	3582608	REC3582608	3582608	
AQ105, 115, 130, 165, 170 MD30, 31, 40, 41 KAD42 KAMD42	REC3582606	3582606	REC3582561	3582561	52 x 13.5 x 8 mm

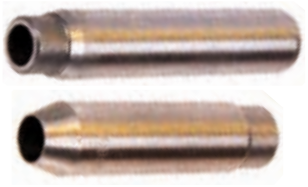

MUELLES | SPRING | MOLLE | RESSORTS

	REF	OEM
AQ 90, 95, 100, 105, 110, 115, 120, 130, 165, 170, MB 18, 20, BB 30, 100, MD 31A (Versión antigua | Old style | versione vecchia | Version ancienne)	REC418737	418737
AQ 120B, 125, 131, 140, 145, 151, 230A, 250A	REC463739	463739
30, 31, 32, 40, 41, 42, 43	REC1545198	1545198
D4 D6	REC3581889	3581889



PISIONERO VÁLVULA | VALVE KEEPER | PRIGIONIERO VALVOLA | CLAVETTE DE SOUPAPE

	REF	OEM
AQ105, 115, 130, 165, 170, 120B, 125, 131, 140, 145, 151, 230A, 250A MB10A MD30, 40	REC419643	419643



COLECTORES Y CODOS | MANIFOLDS & ELBOWS | COLLETTORE E GOMITI | COLLECTEURS ET COUDES

MOTORES GASOLINA | GAS ENGINE | MOTORI BENZINA | MOTEUR ESSENCE

GAS

COLECTORES | MANIFOLDS | COLLETTORE | COLLECTEURS

REF	OEM	
HOT20930	855387 834438	230A, B 250A, B AQ120B AQ125A, B AQ131A, B, C, D AQ140A BB140A, AQ145A, B BB145A AQ151A, B, C



REF	OEM	
MAR870 HGE8870	3858870 3858871 3857450 3854045	3.0GPS, GSM, GLP, GLM



REF	OEM	
MAR894 HGE6894	856894 856137 841676	430A, B 431A, B 432A 434A AQ205A AQ175A V6 (-1993)



REF	OEM	
MAR499	3847499 3857656 3852338 3857678	4.3GL, GXI, GI, GS, OSI, V6-200-A V6-225-A V6 (1993+)



REF	OEM	
HOT20931	856883 855926 835804	AQ200D, F AQ211A AQ225D, E, F BB225 AQ231A, B BB231 AQ260A, B BB260 BB261 AQ271A, B, C, D AQ290A AQ311A, B 500A, B 501A, B 570A 571A 572A



REF	OEM	
MAR501	3847501 3857723 3852374	5.0GXI, OSI, GL, GI, GSI 5.7GI, GXI, GSI, GL, OSI, OSX V8-270, 300, 320





MAR501



MAR501

REF	OEM	
BAOMC1-3852347	3852347	5.0 & 5.8 FIP, FLP, FLI, FSI (Base Ford 302/351)



REF	OEM	
RM3861459	3861459 3852362	7.4GLP, GLI, GI, GSI, GL 8.2GLP, GLI, GSI (454/502)



REF	OEM	
HGE4532	824532	AQ115A, B BB115A, B, C AQ130A, B, C, D



CUERNOS DE ESCAPE SX | EXHAUST TUBO SX | CORNA DI SCARICO SX | CORNES D'ÉCHAPPEMENT SX

REF	OEM
RM3858873	3858873 3850796 3853915 3855281 3850794



CODO | ELBOW | GOMITO | COUDES

REF	OEM	
HGE5599	825599 825598	AQ115A, B, AQ130A, B, C, D



REF	OEM	
MAR684	3588684 3588683	3.0GLM-C 3.0GLP-C, D, E, J, N (2003+)



REF	OEM	
BAOMC20-910380	3850799	3.0L MD



REF	OEM	
RM831834-7	831834	AQ170B, C



REF	OEM	
BAOMC-20-3862603	3863071 3857798 3856662 3851227 3856617 3857810 3857684	3.0GSP, GSM, GLP, GLM (1994-03)



REF	OEM	
MAR037 HGE7037	857037 856895 855380	430A, B 431A, B 432A 434A AQ205A AQ175A



REF	OEM		
MAR061	3863061 3861842 3856444 3855270 3854466 3857402 3862198	V6 - V8 (1993+)	19.7 cm



REF	OEM		
REC3855271	3855271 3850913 3853568 3854428	5.0FIP 5.8FIP, FII, FSI	BABOR | PORT SINISTRA | GAUCHE
REC3855269	3855269 3853567 3854427		ESTRIBOR | STD DESTRA | DROITE



REF	OEM		
MAR964 REC3889964	3889964 3889965	4.3GL, GXI, OSI V6-200, 225 (1993+)	25.7 cm



REF	OEM	
HOT20935	856891 855384	500, 501, 570 ,572 AQ200, 211, 225, 231, 260, 271, 290, 311 BB225, 231, 260, 261



REF	OEM		
MAR627	3862627 3862904	V6 - V8 (1993+)	28.7 cm



EXTENSORES DE ESCAPE | EXHAUST EXTENSOR | PROLUNGA SCARICO | COUDE D'ECHAPPEMENT

REF	OEM	
RM3854874	3854874	4.3GL, GXI, OSI, GS, GI



REF	OEM	
RM3863189	3863189	V6 - V8



RISER 6" (MAR061 & MAR501) | RISER 6" (MAR061 & MAR501) | RISER 6" (MAR061 E MAR501) | REHAUSSE 6" (MAR061 ER MAR501)

REF	OEM
REC3842853	3842853



MOTORES DIESEL | DIESEL ENGINE | MOTORI DIESEL | MOTEUR DIESEL

CODO | ELBOW | GOMITO | COUDES

REF	OEM	
HGE5528	845528	TAMD40A, B AQAD40A, B TMD40B, C

Se instala en codo MAR261INOX o inversor MS3A/B
Installed in elbow MAR261INOX or inverter MS3A/B
Installato nel gomito MAR261INOX o inverter MS3A/B
A installer sur le coude MAR261INOX ou l'inverseur MS3A/B



REF	OEM			
MAR963	859963	31 & 41 (antiguo | old model | vecchio | Ancienne) TMD, TAMD, AQ, AD, MD	RM858955 CEF500530	REC842913





REF	OEM			
MAR289	861289 860656	32, 42, 43, 44, 300 31 & 41 (modernos | new | moderno | modernes) DS	RM860396	REC842913





REF	OEM		
MAR690	840690	2001, B, AG, BG 2002, B, AG, BG 2003, B	REC840902





REF	OEM		
MAR906 RM861906	861906 21190094	MD2010A, B, C, D MD2020A, B, C, D MD2030A, B, C, D MD2040C, D D1-13, 20, 30 D2-40	REC861907





REF	OEM		
MAR345	21424345 3589544 861574 859865	D2-50, 55 MD22	REC888596





new

REF	OEM		JUNTA CODO GASKET GUARNIZIONE JOINT DE COUDE	JUNTA TUBO AGUA WATER GASKET GUARNIZIONE TUBO ACQUA JOINT DU TUBE D'EAU
MAR583	833583	MD1, 2, 3, 11 ,17	REC859015	REC859107



new

REF	OEM		
MAR512	3582512 861413	Serie 31 & 41 MD22	REC859835 REC861414



new

REF	OEM			
MAR930	840930	2003T	REC859112	REC840933



ABRAZADERA ESCAPE EXHAUST CLAMP FASCETTA SCARICO COLLIER D'ÉCHAPPEMENT

REF	OEM	
RM21325765	21325765 842993	30, 31, 32, 40, 41, 42, 43, 44, 300, D4



new

REF	OEM	
REC21325767	21325767 3807212 3838942 865013	D4-300D D6, D7 D103, D61, D62, D63, D71, D742, D73, D74, D75



new

REF	OEM	
REC840933	840933	2003T



CODO ESCAPE INOX 316 — 316 SS EXHAUST ELBOW

REF	OEM			
MAR701INOX	3884701 3583856	D4 (180-300)	REC3584167	REC969415





REF	OEM			
MAR847INOX	22948847 22671214 21700014 3583902	D6 (280-435)	REC3584168	REC969415

REF	OEM			
SED3091400	3830988 3826841 865545 3829668	TAMD63 P-A D71, 72, 73, 74, 7A, 7C TAMD73 P-A, 61, 103		



REF	OEM			
MAR261INOX SED3091000	845261	30 & 40 (Sin soporte | without mount | senza supporto | sans support)	RM843228	REC859011



GOMITO DI SCARICO INOX 316 — COUDE D'ÉCHAPPEMENT EN INOX 316

REF	OEM			
MAR963INOX	859963	31 & 41 (Sin soporte | without mount | senza supporto | sans support)	RM858955	REC842913



REF	OEM			
MAR289INOX SED3091200	861289 860656	KAD32P D5 31, 41, 42, 43, 44, 300	RM860396	REC842913



REF	OEM			
SED3091600	21684825 3841510 22948844 3587159 22671213	D6 AQ & IPS	REC3584168	REC969415



REF	OEM		
SED3090900	861906 21190094	MD2010, 2020, 2030, 2040 D1-13, -20, -30 D2-40	REC861907





PIPA CONEXIÓN PARA CODOS — CONNECTOR FOR ELBOW — INNESTI PER GOMITI — PIPE DE COUDE D'ECHAPPEMENT

REF	OEM	CODO ELBOW GOMITO COUDE	
REC859836	859836 3587410	MAR345 MAR512	REC859835



REF	OEM	CODO ELBOW GOMITO COUDE
REC21450768	21450768 3819016 3583915	D4 & D6

Incluye Tórica
O-ring included
Include O-ring
Comprend un joint torique



GUÍA CODO ESCAPE — EXHAUST ELBOW APPLICATION — GUIDA GOMITO DI SCARICO — GUIDE DES COUDES D'ÉCHAPPEMENT

	CODO ELBOW GOMITO COUDE		CODO INOX SS ELBOW GOMITO INOX COUDE INOX		JUNTA GASKET GUARNIZIONE JOINT		ANILLO ORING FASCIA TONDA JOINT TORIQUE		ABRAZADERA TURBO TURBO CLAMP FASCETTA TURBO COLLIER		CONECTOR CONNECTOR CONNETTORI CONECTEUR	
	REF	OEM	REF	OEM	REF	OEM	REF	OEM	REF	OEM	REF	OEM
TMD30A TAMD30A AQAD30A			MAR261INOX SED3091000	845261	REC859011	859011			RM21325765	842993		
TMD40A, B, C TAMD40A, B AQD40A AQAD40A, B			MAR261INOX SED3091000	845261	REC859011	859011			RM21325765	842993	HGE5528	845528
TMD31A, B, D, L-A, P-A TAMD31A, B, D, L-A, M-A AQAD31A AD31, B MD31A TAMD41A, B, D, H-A, H-B, P-A, L-A, M-A TMD41A, B, D, L-A D41A, B AD41A, B, D AQAD41A	MAR963	859963	MAR963INOX	859963	REC859002	859002	REC842913	842913	RM21325765	842993		
AD31B, D-A, L-A, P-A, XD KAD32P D41B, D AD41B, D, L-A, P-A KAMD42A, P-A KAD42A, P-A TAMD42WJ-A KAMD43P-A KAD43P-A KAMD44P-A, P-C KAD44P, P-B, P-C KAD300-A KAMD300-A D5A-T, -TA D5A-B TA	MAR289	861289	MAR289INOX SED3091200	861289	REC859002	859002	REC842913	842913	RM21325765	842993		
TAMD72WJ-A, P-A TAMD63L-A, P-A TAMD74C-A, C-B, L-A, L-B, P-A, P-B TAMD75P-A TAMD71A, B TAMD73P-A, WJ-A TAMD72A TAMD61A TAMD62A TAMD103A D7A-T, A-TA, A-B TA, C-TA, C-B TA			SED3091400	3830988					REC21325767			
D4-180I-B, I-C, I-D, I-E D4-210A-A, A-B, I-A, I-B D4-225A-A-C, A-D, A-E, I-B, I-C, I-D, I-E D4-260A-A, A-B, A-C, A-D, A-E, D-B, D-C, D-D, D-E, I-A, I-B, I-C, I-D, I-E D4-300A-A, A-C, A-D, A-E, D-A, D-C, D-E, D-DI-A, I-C, I-D, I-E		3884701	MAR701INOX	3884701					RM21325765	842993	REC21450768	21450768
D4-300-D-A, D-C, D-E, D-E (IPS) D6-280A-A, A-B, A-C, A-D, A-E D6-300A-F, D-F D6-310A-A, A-B, A-C, A-D, A-E, D-B, D-C, D-D, D-E D6-330A-B, A-C, A-D, A-E, A-F, D-B, D-C, D-D, D-E, D-F D6-350A-A, A-B D6-370A-B, A-C, A-D, A-E, A-F, D-A, D-B, D-C, D-D, D-E, D-F D6-400A-F D6-435D-F			MAR847INOX SED3091600	22948847 21684825	REC3584168 REC969415				REC21325767		REC21450768	21450768
2001, AG, B, BG 2002, AG, B, BG 2003, B	MAR690	840690			REC840902	840902	REC418445	418445				
MD2010A,B,-C,-D MD2020A,B,-C,-D MD2030A,B,-C,-D MD2040A,B,-C,-D D1-13, 13B, 13F D1-20, 20B, 20F D1-30, 30B, 30F D1-40, 40B, 40F	MAR906 RM861906	861906	SED3090900	861906	REC861907	861907						
D2-55A, B, C, D, E, F D2-50F MD22A, L-A, L-B, P-B	MAR345	21424345			RM859834 REC888596	859834 888596					REC859836	859836
2003T	MAR930	840930			REC859112							
31 & 41 MD22	MAR512	358251 861413			REC859835 REC861414							
MD1,2,3,11,17	MAR583	833583			REC859015							

MANGUITOS DE ESCAPE | EXHAUST HOSE | MANICOTTO SCARICO | DURITE D'ÉCHAPPEMENT

REF	OEM	
REC3584167	3584167	D4 DPH / DPR



REF	OEM	
REC3584168	3584168	D6 DPH / DPR



REF	OEM	
RM3853608	3853608	Ford 5.0 & 5.8 HD, MD & NC (Para codos | For elbows | per gomito | Pour coudes F.I.)



REF	OEM		
REC834751	834751	160 mm x Ø in 95 mm	AQ 175, 280, 430A, 431A V6 V8



REF	OEM	
RM843228	843228	AQ / AD 30, 40



REF	OEM	
REC3852696	3852696	4.3 (1991), 5.0-5.8 FORD (1991) 7.4 (460) (1988-89) 5.7LE (1990-91) Modelos modernos | Latest models | Modelli moderno | Modèles modernes 4.3 / 5.0 / 5.7 / 7.4 / 8.1



REF	OEM	
REC3863450	3863450	2.5 (1986) 3.0 (1986-91) 2.3 (1989-90) 4.3 (1990-91) 5.0-5.8 FORD (1991) 5.7 (1986) Modelos modernos | Latest models | Modelli moderno | Modèles modernes 3.0 / 4.3 / 5.0 / 5.7 / 7.4 / 8.1 / D3



REF	OEM		
RM860396 CEF500531	860396	D31, 32, 41, 42, 43, 44, 300	



REF	OEM		
REC952980	952980	200 mm x Ø in 57 mm	AQ 60, 90, 95, 105, 110, 115, 120A, 130



REF	OEM	
RM858955 CEF500530	858955 858729	AQ 31, 41



KIT REPARACIÓN TUBO ESCAPE | REPAIR KIT EXHAUST TUBE | KIT RIPARAZIONE SCARICO | KIT REPARATION POUR CORNE D'ÉCHAPPEMENT

REF	OEM	
RM3581114	3581114	3.5"
RM3581115	3581115	4"



UNIDADES DE TRANSMISIÓN
TRANSMISSION UNIT
UNITÀ DI TRASMISSIONE
EMBASES ET PIÈCES

PISTONES DIRECCIÓN Y COMPONENTES | STEERING PISTONS & PARTS | PISTONI IDRAULICI E COMPONENTI | VERIN ET COMPOSANTS DE DIRECTION

PISTÓN DIRECCIÓN | STEERING PISTON | PISTONE STERZO | VERIN DE DIRECTION

REF	OEM	
RM21745117	21745117 22256625 22452003	DPH-A, B, C, D, D1 DPR-A, B, C Instalación de gobierno electrónico Installation of electronic government Installazione del governo elettronico Installation de direction éléctronique



REF	OEM	
RM3858128	3812269 21910902 3862513 3862210 3860883 3860726	SX & DPS



REF	OEM	
REC22452005	22452005 21745119	DPH-A, B, C, D, D1 DPR-A, B, C, D DPI Instalación de gobierno simple Simple government installation Installazione semplice Installation simple



ACTUADOR DE PISTÓN D4/D6 | PISTON ACTUATOR D4/D6 | ATTUATORE PISTONE D4/D6 | ACTIONNEUR D4/D6

REF	OEM	
REC22663814	22663814 21146097 21505553	DPH DPR



KIT LATIGUILLOS DIRECCIÓN | HYDRAULIC HOSES KIT | KIT TUBI STERZO | KIT FLEXIBLES HYDRAULIQUE

REF	OEM	
RM21548739	21548739 3863347 3863405 3863406 3863407	DPH, DPR, DPI



KIT REPARACIÓN PISTÓN · PISTON REPAIR KIT · KIT RIPARAZIONE PISTONE · KIT REPARATION DE VERIN

REF	CILINDRO / CYLINDER / CILINDRO / VERIN DE DIRECTION
REC22170	REC22452005



REF	CILINDRO / CYLINDER / CILINDRO / VERIN DE DIRECTION
REC22171	3861556



KIT FUELLES PISTONES DIRECCIÓN · KIT BELLOWS STEERING PISTON · KIT CUFFIE PISTONE STERZO · KIT SOUFFLETS POUR VERIN DE DIRECTION

REF	OEM	
RM21132674	21132674	DPH-A, B, C DPR-A, B, C DPI



BOMBA HIDRÁULICA DIRECCIÓN · HYDRAULIC STEERING PUMP · POMPA IDRAULICA STERZO · POMPE DE DIRECTION HIDRAULIQUE

REF	OEM	
RM3888323	3888323 3850491 3850492	3.0 GLP-E



EXTRACTOR POLEA BOMBA DIRECCIÓN · PULLEY REMOVER, DRIVE PUMP · RIMOZIONE PULEGGIA, POMPA STERZO · EXTRACTEUR DE POULIE POMPE DE DIRECTION

new

REF
REC91-25034



SERVO BOMBA · SERVO PUMP · SERVO POMPA · SERVO POMPE

REF	OEM	
REC3887373	3887373	3.0 V6, V8 Nueva versión New version Nuova versione Nouvelle version



REF	OEM	
REC3884974	3884974 3860871	V6 GI, GL, GXI V8 GI, GL, GXI



POLEA PARA SERVO BOMBA — PULLEY FOR SERVO PUMP — PULEGGIA PER SERVO POMPA — POULIE DE SERVO POMPE

REF	OEM	SERVO BOMBA SERVO PUMP SERVO POMPA SERVO POMPE
REC3853804	3853804	RM3888323

Correa dentada
Toothed belt
Cinghia dentata
Courroie dentée



REF	OEM	
REC1359649	1359649 22297931 22797782	KAD42, 43, 44, 300, 32 D3, D4, D6 MD, TMD, TAMD22 (trans. SX) 7.4/8.2 L GS, GL, GI

new



Se suministra con polea para correa trapezoidal. Para serie D utilizad polea antigüa.
Supplied with V-belt pulley. For D series use old pulley.
Fornito con puleggia a cinghia trapezoidale. Per la serie D utilizzare la vecchia puleggia.
Fourni avec une poulie à courroie en V. Pour la série D, utilisez l'ancienne poulie.

CABLE RUDDER — RUDDER CABLE — CAVO RUDDER — CÂBLE D'EMBASE

REF	OEM	
REC3593951	3593951	DPH DPR DPI



CABLE CONTROL 33C — CONTROL CABLES 33C — CAVI DI CONTROLLO 33C — CÂBLES DE COMMANDE 33C

REF	OEM	(ft)	(m)
PRE3300C05	21633476	5	1.52
PRE3300C06	21633477	6	1.83
PRE3300C07	21633478	7	2.13
PRE3300C08	21633479	8	2.44
PRE3300C09	21633480	9	2.74
PRE3300C10	21633481	10	3.05
PRE3300C11	21633482	11	3.35
PRE3300C12	21633483	12	3.66
PRE3300C13	21633484	13	3.96
PRE3300C14	21633485	14	4.27
PRE3300C15	21633486	15	4.57
PRE3300C16	21633487	16	4.88
PRE3300C17	21633488	17	5.18
PRE3300C18	21633489	18	5.49
PRE3300C19	21633490	19	5.79
PRE3300C20	21633491	20	6.10
PRE3300C21	21633492	21	6.40
PRE3300C22	21633493	22	6.71
PRE3300C23	21633494	23	7.01
PRE3300C24	21633495	24	7.32

REF	OEM	(ft)	(m)
PRE3300C25	21633496	25	7.62
PRE3300C26	21633497	26	7.92
PRE3300C27	21633498	27	8.23
PRE3300C28	21633499	28	8.53
PRE3300C29	21633500	29	8.84
PRE3300C30	21633501	30	9.14
PRE3300C31	21633502	31	9.45
PRE3300C32	21633503	32	9.75
PRE3300C33	21633504	33	10.06
PRE3300C34	21633505	34	10.36
PRE3300C35	21633506	35	10.67
PRE3300C36	21633507	36	10.97
PRE3300C38	21633509	38	11.58
PRE3300C40	21633511	40	12.19
PRE3300C42	21633513	42	12.80
PRE3300C44	21633515	44	13.41
PRE3300C46	21633517	46	14.02
PRE3300C48	21633519	48	14.63
PRE3300C50	21633521	50	15.24

MODELOS DE COLAS STERNDRIVE MODELS MODELLI PIEDI MODÉLES D'EMBASES

AQ100

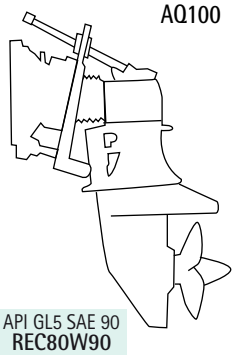

API GL5 SAE 90
REC80W90

AQ100 (20422-45350)
AQ100B (500000)

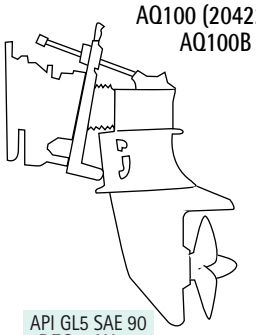

API GL5 SAE 90
REC80W90

AQ170R

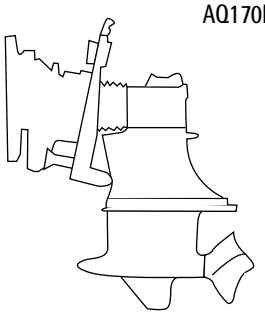

SAE: SAME AS ENGINE

AQ200
AQ250
AQ270

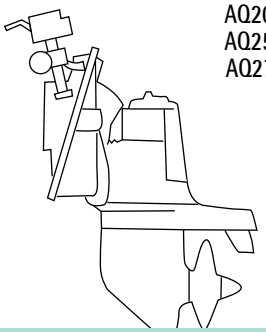

SAE: SAME AS ENGINE

AQ270E

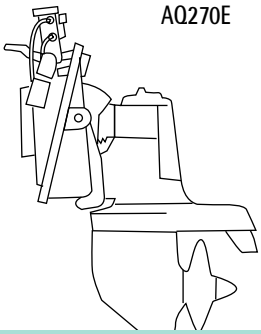

AQ270E
High speed

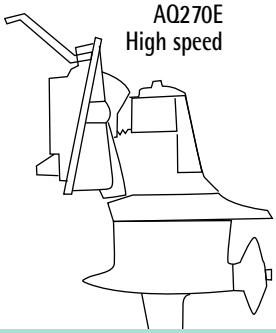

AQ270TE

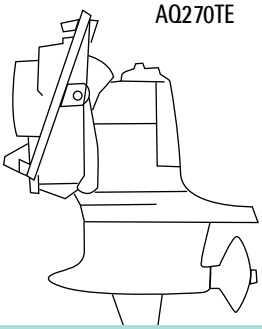

SAE: SAME AS ENGINE

AQ275
AQ275A

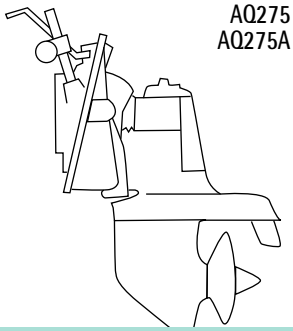

SAE: SAME AS ENGINE

AQ280



AQ280T

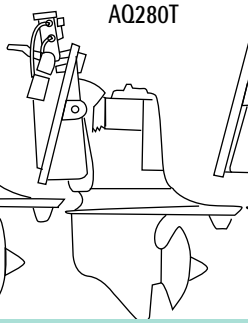

AQ280PT

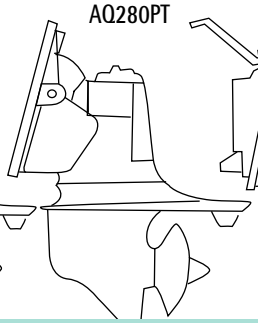

SAE: SAME AS ENGINE

AQ280E

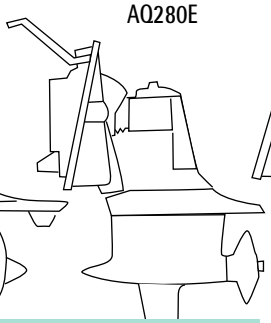

AQ280DP

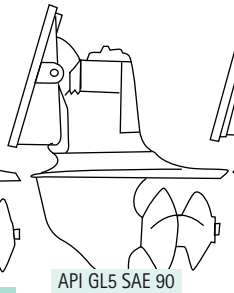

API GL5 SAE 90
REC80W90

AQ280DP/PT

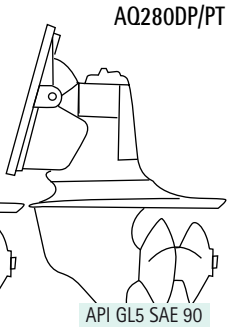

API GL5 SAE 90
REC80W90

AQ280
AQ285A

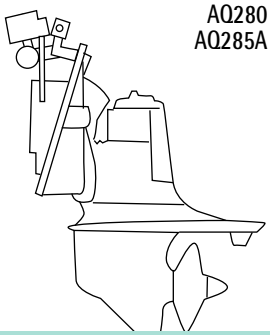

SAE: SAME AS ENGINE

AQ290
AQ290A

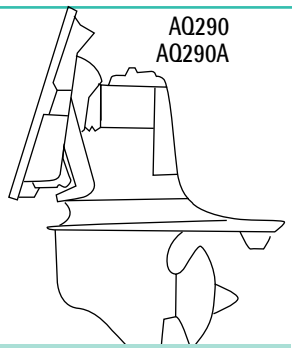

SAE: SAME AS ENGINE

AQ 290-DP
AQ290A-DP

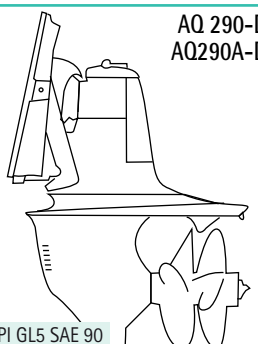

API GL5 SAE 90
REC80W90

AQ750

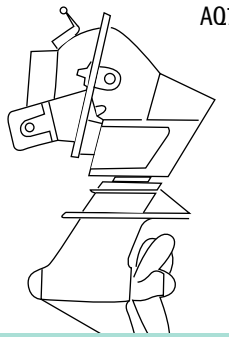

SAE: SAME AS ENGINE

SP-A
SP-A1

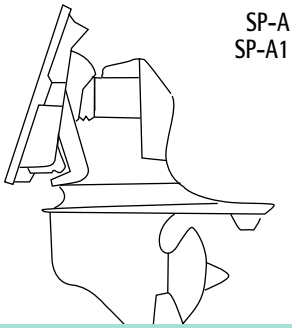

SAE: SAME AS ENGINE

SP-A2

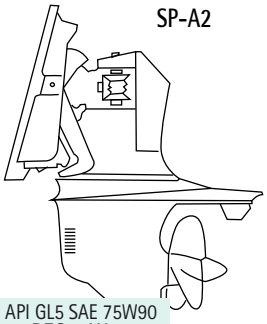

API GL5 SAE 75W90
REC75W90

SP-C

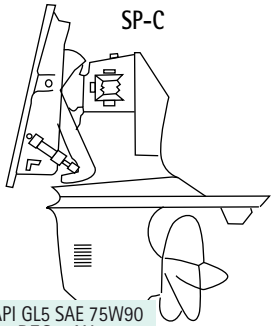

API GL5 SAE 75W90
REC75W90

SP-E

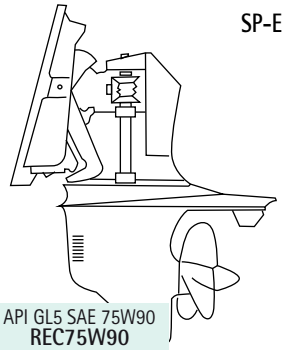

API GL5 SAE 75W90
REC75W90



DP-A

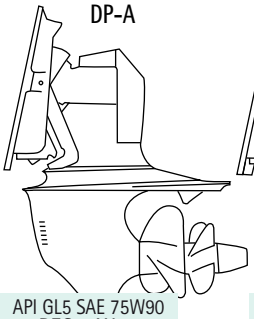

API GL5 SAE 75W90
REC80W90

DP-A1

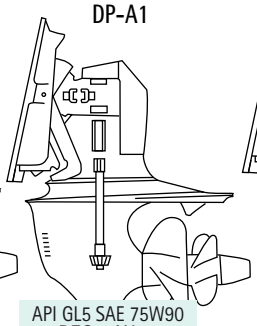

API GL5 SAE 75W90
REC80W90

DP-A2

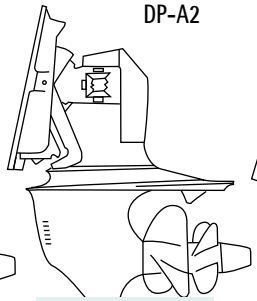

API GL5 SAE 75W90
REC75W90

DP-B
DP-B1

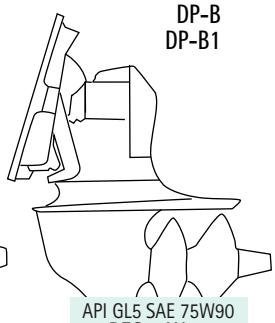

API GL5 SAE 75W90
REC75W90

DP-C

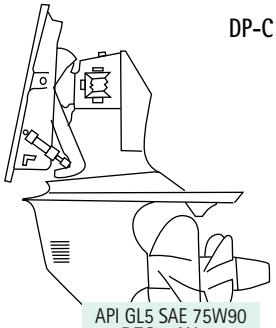

API GL5 SAE 75W90
REC75W90

DP-C1
DP-D1

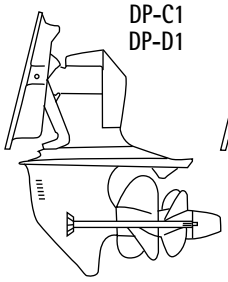

API GL5 SAE 75W90
REC75W90

DP-D
DP-E

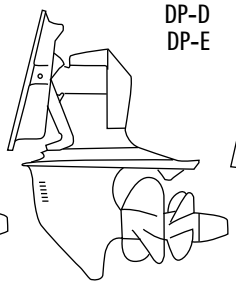

API GL5 SAE 75W90
REC75W90

DP-G

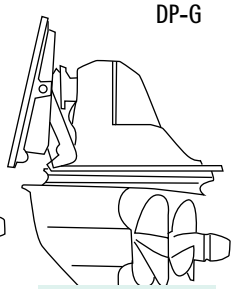

API GL5 SAE 75W90
REC75W90

DP-SM
DP-SMTD
DP-SMTD1

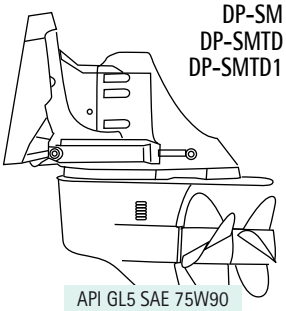

API GL5 SAE 75W90
REC75W90

DP-S
DP-S1

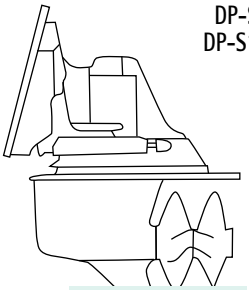

API GL5 SAE 75W90
REC75W90

DPX-S
DPX-S1
DPX-R

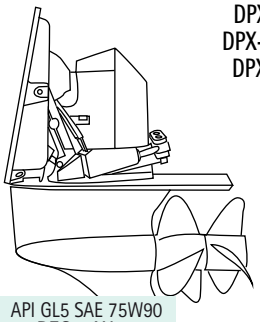

API GL5 SAE 75W90
REC75W90

DPX-A

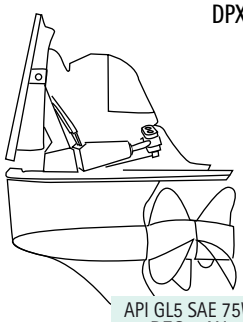

API GL5 SAE 75W90
REC75W90

DPS-A

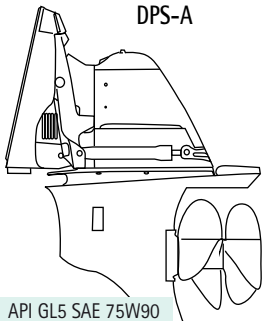

API GL5 SAE 75W90
REC75W90

XDP-B

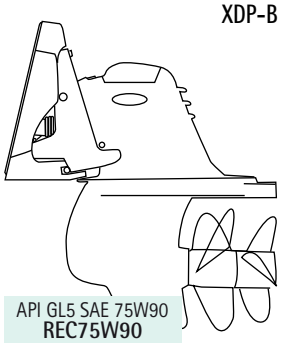

API GL5 SAE 75W90
REC75W90

DPH-A

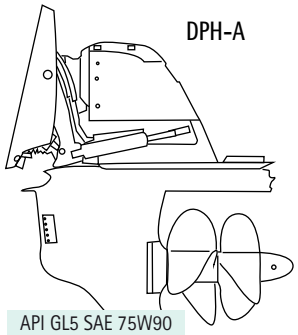

API GL5 SAE 75W90
REC75W90

DPR-A

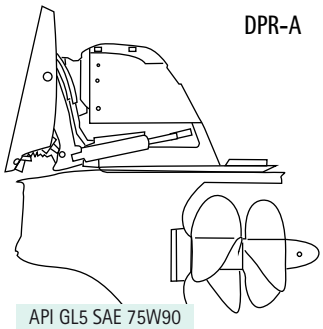

API GL5 SAE 75W90
REC75W90

SX-A

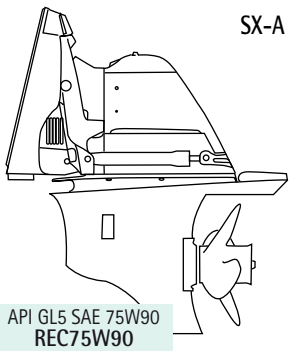

API GL5 SAE 75W90
REC75W90

SX-S

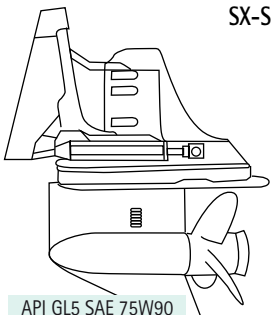

API GL5 SAE 75W90
REC75W90

SX-C
SX-C1
SX-C2

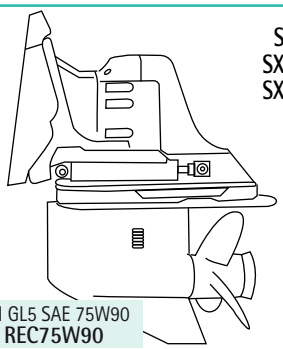

API GL5 SAE 75W90
REC75W90

SX-RT1
SX-RT2

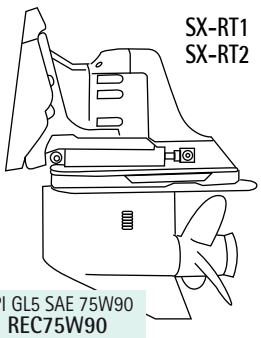

API GL5 SAE 75W90
REC75W90

SX-M
SX-MTD

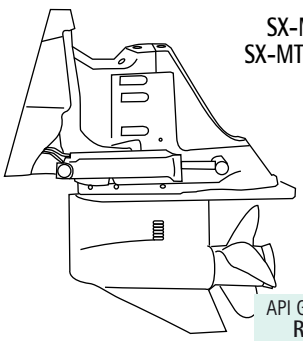

API GL5 SAE 75W90
REC75W90

DESPIECE COLAS — GEAR CASE PARTS — PARTI PIEDI — PIÈCES D'EMBASES

IPS-A, B, C, D, E, F

8



REF
REC3812357

9



REF
REC22256171

10



REF	
REC23172849	Zn
REC23172849AL	Al



REF	OEM
REC22479648	22479648



REC75W90U3
REC75W140U3

P 21

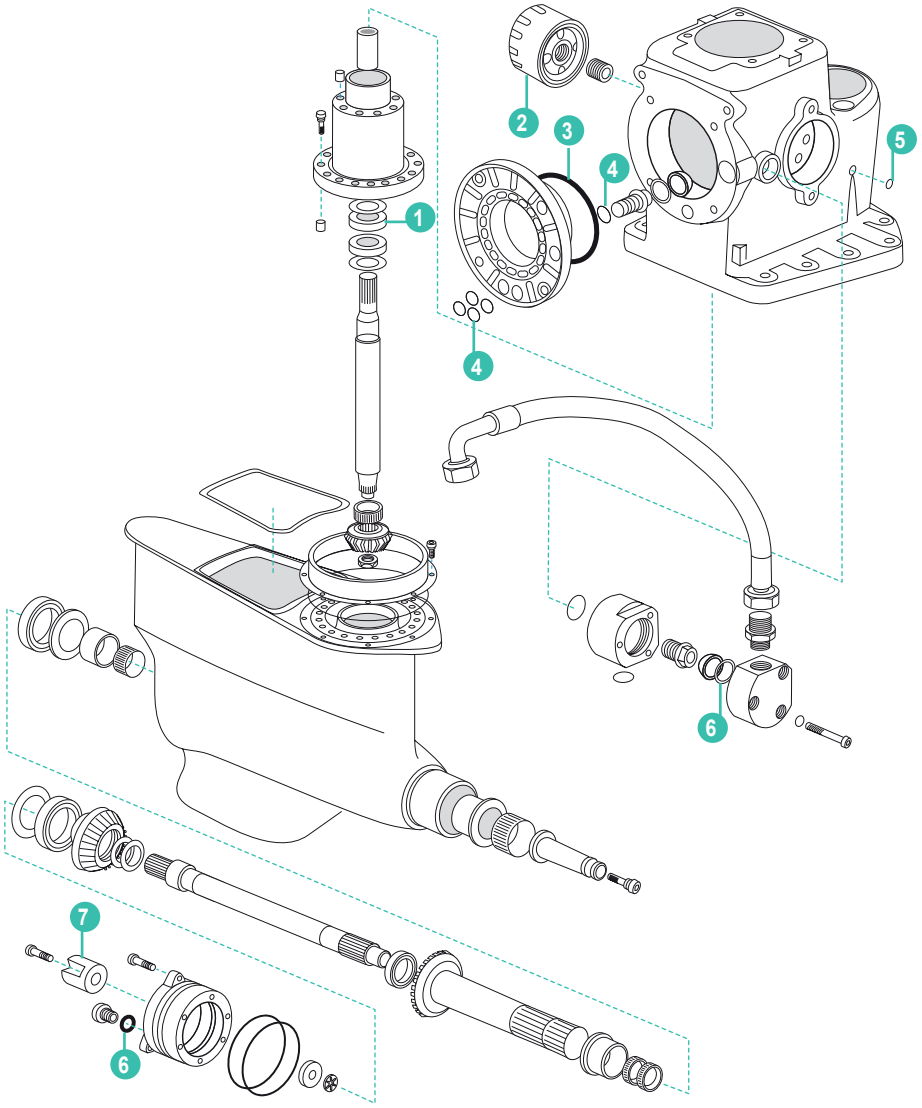

	REF	OEM				
1	REC3850852	3850852	COJINETE	BEARING	CUSCINETTO	ROULEMENT
2	REC834337	834337	FILTRO DE ACEITE	OIL FILTER	FILTRO OLIO	FILTRE A HUILE
3	REC925260	925260	ARO TÓRICO	O-RING	O-RING	JOINT TORIQUE
4	REC955989	955989	ARO TÓRICO	O-RING	O-RING	JOINT TORIQUE
5	REC976018	976018	ARO TÓRICO	O-RING	O-RING	JOINT TORIQUE
6	REC949656	949656	ARO TÓRICO	O-RING	O-RING	JOINT TORIQUE
7	CM3593881	3593981	ÁNODO	ANODE	ANODO	ANODE
8	REC3812357	3812357	KIT JUNTAS	GASKET KIT	KIT GUARNIZIONI	KIT JOINTS
9	REC22256171	22256171	ARO DE GOMA	RUBBER RING	ANELLO IN GOMMA	JOINT CAOUTCHOUC
10	REC23172849 REC23172849AL	40005875 23172849	ÁNODO	ANODE	ANODO	ANODE

120, 130, 150, M525





REF
REC877362



REF
REC876391

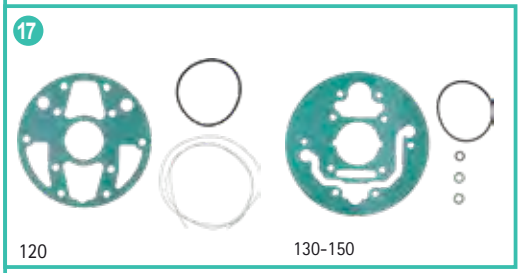

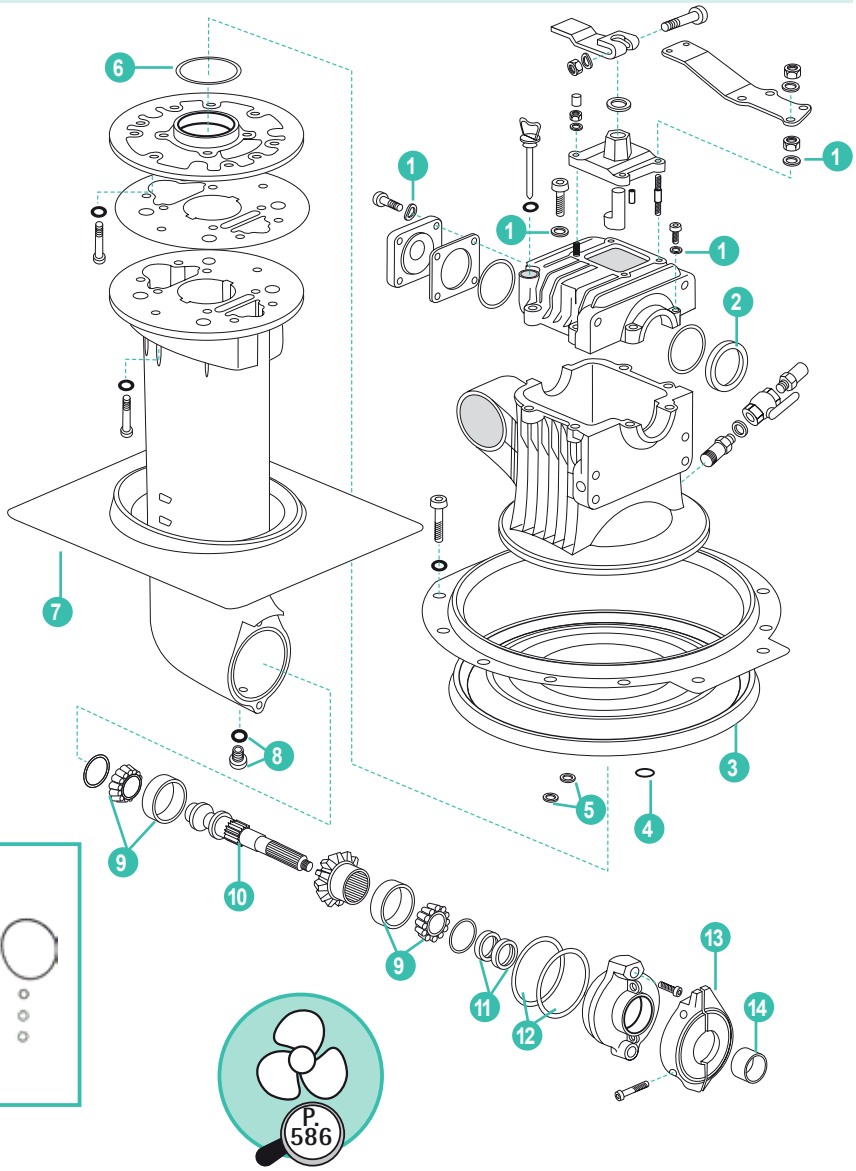

	REF	OEM				
1	REC941907	941907	ARANDELA	WASHER	RONDELLA	RONDELLE
2	REC3583322	3583322	RETÉN	SEAL	TENUTA	JOINT SPI
3	REC877362	21389074	KIT REPARACION GOMA	GOMMA REPAIR KIT	KIT RIPARAZIONE GOMMA	KIT SOUFFLET
4	REC955974	955974	ARO TÓRICO	O-RING	FASCIA TONDA	JOINT TORIQUE
5	REC925054	925054	ANILLO RETÉN	OIL SEAL	PARAOLIO	JOINT SPI
6	REC925256	925256	ARO TÓRICO	O-RIN	FASCIA TONDA	JOINT TORIQUE
7	REC22303438 CEF501001	22303438	GOMA PASACASCOS COLA	BELLOW KIT	GOMMA PASSASCAFO PIEDE	BAVETTE CAOUTCHOUC
8	REC22-67892A05	3854539	TAPÓN	CAP	TAPPO	BOUCHON
9	REC31-66668A1	3854249	COJINETE RODILLO (⃠ 150)	BEARING (⃠ 150)	CUSCINETTO (⃠ 150)	ROULEMENT (⃠ 150)
10	REC3582888	3582888	ÁRBOL TRANSMISIÓN (⃠ 150)	SHAFT SAILBOAT (⃠ 150)	ALBERO (⃠ 150)	ARBRE D'HELICE(⃠ 150)
11	REC3593663	3593663	RETÉN	O-RING	TENUTA	JOINT SPI
12	REC889672	889672	ARO TÓRICO (120 y 130)	O-RING (120 & 130)	TENUTA (120 E 130)	JOINT TORIQUE (120 E 130)
	REC925256	925256	ARO TÓRICO (M525)	O-RING (M525)	TENUTA (M525)	JOINT TORIQUE (M525)
13	REC876286AL	876286	KIT ÁNODO Al (110, 120)	KIT Al ANODE (110, 120)	KIT ANODO Al (110, 120)	KIT ANODES Al (110, 120)
	REC22651246	3888305	KIT ÁNODO Zn(130, 150)	KIT Zn ANODE (130, 150)	KIT ANODO Zn (130, 150)	KIT ANODES Zn (130, 150)
	REC22651246AL	3888305	KIT ÁNODO Al (130, 150)	KIT Al ANODE (130, 150)	KIT ANODO Al (130, 150)	KIT ANODES Al (130, 150)
14	REC3582887	3582887	DISTANCIADOR EJE COLAS	SPACER SHAFT	DISTANZIATORE DELL'ASSE	ENTRETOISE
15	REC877362	21389074	KIT 110S, S-B, 120S,S-E, S-D, S120C, 130S/R, 150S/R, M525S/SR	KIT 110S, S-B, 120S,S-E, S-D, S120C, 130S/R, 150S/R, M525S/SR	KIT 110S, S-B, 120S,S-E, S-D, S120C, 130S/R, 150S/R, M525S/SR	KIT SOUFFLETS 110S, S-B, 120S,S-E, S-D, S120C, 130S/R, 150S/R, M525S/SR
16	REC876391	876391 875720	KIT 120SB, S120C, S-E, S-D	KIT 120SB, S120C, S-E, S-D	KIT 120SB, S120C, S-E, S-D	KIT JOINTS 120SB, S120C, S-E, S-D
17	REC21112496	21112496	KIT 120	KIT 120	KIT 120	KIT JOINTS 120
	REC21112497	21112497	KIT 130/150	KIT 130/150	KIT 130/150	KIT JOINTS 130/150

XDP

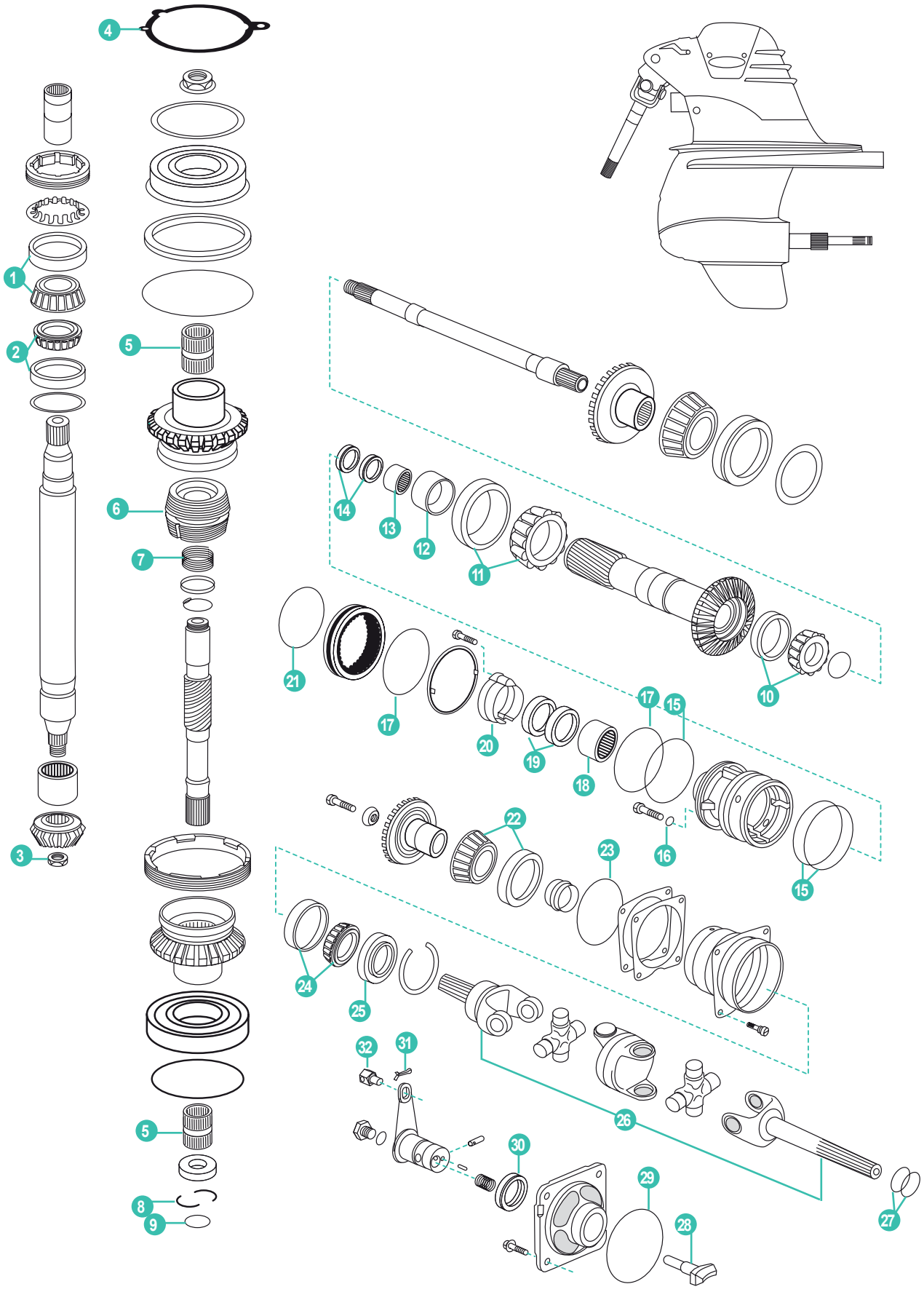
4
1
2
3
5
6
7
8
9
5
10
11
12
13
14
15
16
17
18
19
20
21
22
23
24
25
26
27
28
29
30
31
32

	REF	OEM				
1	REC31-86748A1	6854250	COJINETE RODILLO	BEARING	CUSCINETTO	ROULEMENT
2	REC31-66668A1	3854249	COJINETE RODILLO	BEARING	CUSCINETTO	ROULEMENT
3	REC852212	852212	TUERCA	NUT	DADO	ÉCROU
4	REC3862105	3862105	JUNTA TAPA	COVER SEAL	GUARNIZIONE COPPERCHIO	JOINT DE COUVERCLE
5	RM3852390	3852390	COJINETE	BEARING	CUSCINETTO	ROULEMENT
6	RM3807613	3807613	MANGUITO DESLIZANTE	SLIDING SLEEVE	CONO SELETTORE	CONE D'EMBRAYAGE
7	REC3852296	3852296	RESORTE	SPRING	MOLLA	RESSORT
8	REC3852295	3852295	CLIP	CLIP	CLIP	CLIP
9	REC949656	949656	ARO TÓRICO	O-RING	O-RING	JOINT TORIQUE
10	RM184691	184691	COJINETE	BEARING	CUSCINETTO	ROULEMENT
11	REC184765	184765	COJINETE	BEARING	CUSCINETTO	ROULEMENT
12	REC184683	184683	ANILLO INTERIOR	RING	ANELLO INTERIORE	BAGUE INTÉRIEURE
13	REC183272	183272	COJINETE	BEARING	CUSCINETTO	ROULEMENT
14	REC853808	853808	RETÉN	SEAL	PARAOLIO	JOINT SPI
15	REC942791	942791	ARO TÓRICO	O-RING	O-RING	JOINT TORIQUE
16	REC955981	955981	ARO TÓRICO	O-RING	O-RING	JOINT TORIQUE
17	REC946438	946438	ARO TÓRICO	O-RING	O-RING	JOINT TORIQUE
18	REC183859	183859	COJINETE DE RODILLO	BEARING	CUSCINETTO	ROULEMENT A AIGUILLES
19	REC851407	851407	RETÉN	O-RING	O-RING	JOINT SPI
20	CM3861634	3861634	ÁNODO Zn	Zn ANODE	ANODO Zn	ANODE Zn
	CM3861634A	3861634	ÁNODO Al	Al ANODE	ANODO Al	ANODE Al
21	REC3852865	3852865	ARO TÓRICO	O-RING	O-RING	JOINT TORIQUE
22	REC3850852	3850852	COJINETE	BEARING	CUSCINETTO	ROULEMENT
23	REC967344	967344	ARO TÓRICO	O-RING	O-RING	JOINT TORIQUE
24	REC183247	3850853	COJINETE	BEARING	CUSCINETTO	ROULEMENT
25	REC3852272	3852272	RETÉN	SEAL	PARAOLIO	JOINT SPI
26	RM3860842	3860842	TRANSMISIÓN COMPLETA	U-JOINT ASSEMBLY	KIT CARDANO	CARDAN COMPLET
27	REC997368	3852565	ARO TÓRICO	O-RING	O-RING	JOINT TORIQUE
28	RM3856502	3856502	PUNTERA SELECTOR	GEAR DOG	PERNO	DOIGT DE SELECTEUR
29	REC925093	925093	ARO TÓRICO	O-RING	O-RING	JOINT TORIQUE
30	REC853868	853868	RETÉN	SEALING RING	O-RING TENUTA	JOINT SPI
31	REC3854480	3854480	PASADOR HENDIDO	PIN	SPINOTTO	GOUPILLE DE SECURITE
32	REC22336734	3852329	CUBO	HUB	CUBE	CONNECTEUR CÂBLE DE COMMANDE



REF
REC3859050 3859050



REF
REC23024

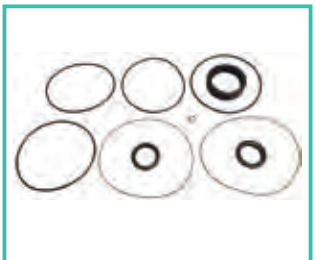

REF
REC23025

DPH / DPR

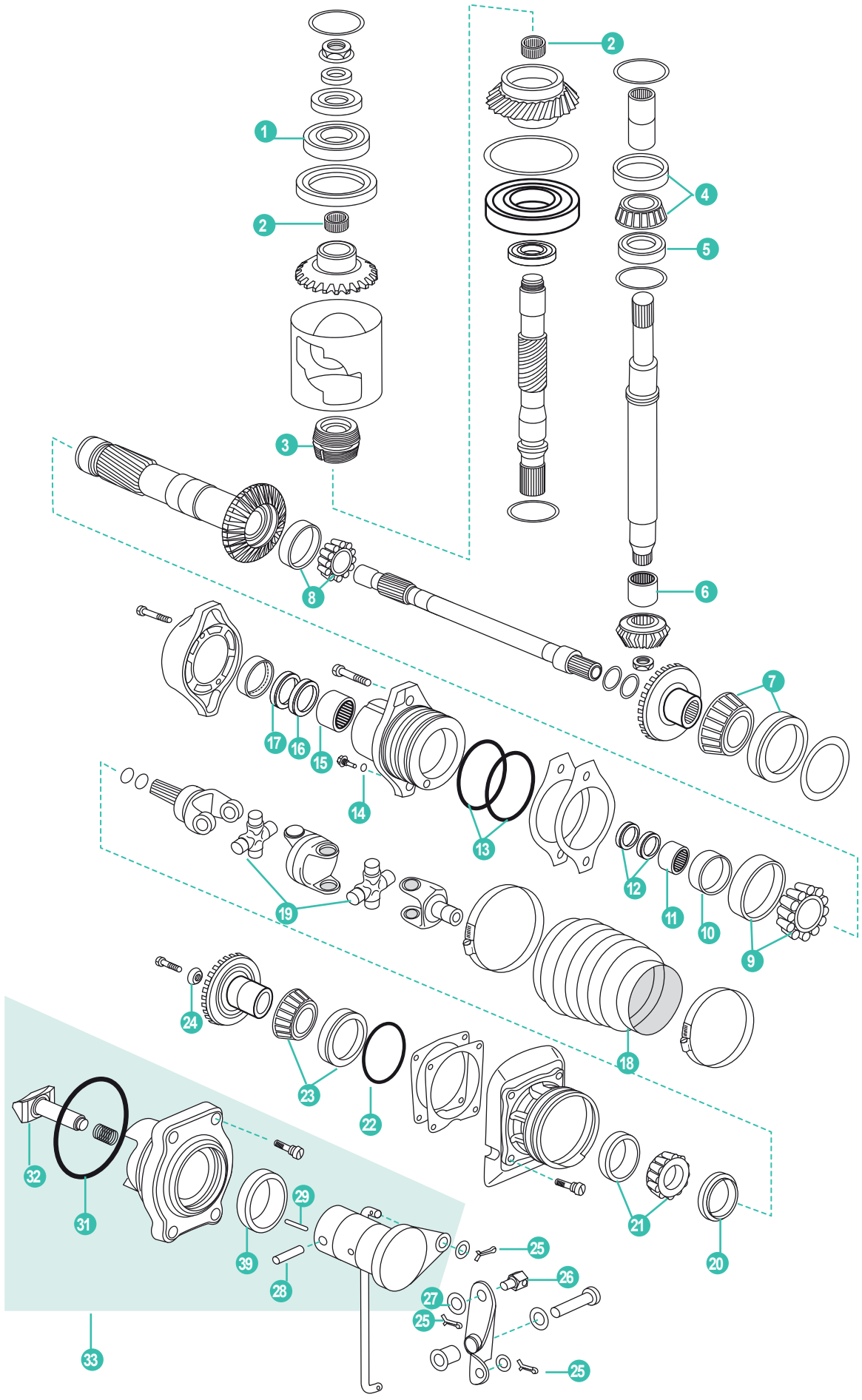
1
2
3
2
4
5
6
8
7
17
16
15
14
13
12
11
10
9
19
18
24
23
22
21
20
32
31
29
39
28
25
26
27
25
25
33

	REF	OEM				
1	REC181804	181804	COJINETE BOLAS	BEARING	CUSCINETTO	ROULEMENT
2	REC184778	184778	COJINETE DE RODILLO	BEARING	CUSCINETTO	ROULEMENT
3	REC3849006	3849006	MANGUITO DESLIZANTE	SLIDING SLEEVE	CONO SELETTORE	CONE D'EMBRAYAGE
4	REC11065	11065	COJINETE DE RODILLO	BEARING	CUSCINETTO	ROULEMENT
5	REC984223	984223	COJINETE DE BOLAS	BEARING	CUSCINETTO	ROULEMENT
6	REC184654	184654	COJINETE	BEARING	CUSCINETTO	ROULEMENT
7	REC183765	183765	COJINETE DE RODILLO	BEARING	CUSCINETTO	ROULEMENT
8	REC425784	425784	COJINETE DE RODILLO	BEARING	CUSCINETTO	ROULEMENT
9	REC984222	984222	COJINETE DE RODILLO	BEARING	CUSCINETTO	ROULEMENT
10	REC984225	984225	CASQUILLO	BUSHING	BOCCOLA	BAGUE
11	REC183390	184642	COJINETE	BEARING	CUSCINETTO	ROULEMENT
12	REC3863080	3863080+3863081	KIT RETENES	SEALS KIT	KIT TENUTE	KIT JOINTS
13	REC925260	925260	ARO TÓRICO	O-RING	O-RING	JOINT TORIQUE
14	REC889455	889455	JUNTA TAPÓN ACEITE	GASKET OF OIL CAP	GUARNIZIONE TAPPO OLIO	JOINT SPI BOUCHON D'HUILE
15	REC984224	984224	COJINETE AGUJAS	BEARING	CUSCINETTO	ROULEMENT
16	REC3863083	3863083	RETÉN	SEAL RING	PARAOLIO	JOINT SPI
17	REC3863082	3863082	RETÉN	SEAL	TENUTA	JOINT SPI
18	REC3808898	3808898	FUELLE	BELLOW	CUFFIA	SOUFFLET DE CARDAN
19	REC3843136	3843136	CRUCETA	U-JOINT	CROCETTA	CROISILLON DE CARDAN
20	REC3863084	3863084	RETÉN ACEITE	SEAL OIL	PARAOLIO	JOINT SPI
21	REC11043	11043	COJINETE	BEARING	CUSCINETTO	ROULEMENT
22	REC925259	925259	ARO TÓRICO	O-RING	O-RING	JOINT TORIQUE
23	REC11096	11096	COJINETE RODILLO	BEARING	CUSCINETTO	ROULEMENT
24	REC3862387	3862387	ARANDELA	WASHER	RONDELLA	RONDELLE
25	REC17276	17276	PASADOR HENDIDO	PIN	SPINOTTO	GOUPILLE
26	REC22336734	22336734	CUBO	HUB	CUBO	CONNECTEUR CABLE DE COMMANDE
27	REC940191	940191	ARANDELA	WASHER	RONDELLA	RONDELLE
28	REC3862867	3862867	PASADOR	PIN	SPINOTTO	GOUPILLE
29	REC951936	951936	PASADOR TUBULAR	PIN	SPINOTTO	GOUPILLE
30	REC3863085	3863085	RETÉN	SEAL RING	TENUTA	JOINT SPI
31	REC945624	945624	ARO TÓRICO	O-RING	O-RING	JOINT TORIQUE
32	REC3862387	3862387	PUNTERA SELECTOR	DOG	TERMINALE	DOIGT DE SELECTION
33	REC22273952	22273952 3862385	MECANISMO DEL CAMBIO	SHIFT MECHANISM	MECCANISMO DI CAMBIO	MÉCANISME DE CHANGEMENT



REF
REC23010

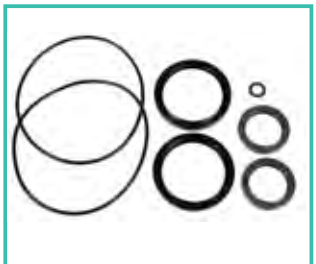

REF
REC23018



REC75W140U3
P. 22

PARTE SUPERIOR AQUAMATIC (ANTIGUA) | UPPER HOUSING (OLD TYPE) | PARTE SUPERIORE AQUAMATIC (VECCHIO) | PARTIE SUPÉRIEURE AQUAMATIC (ANCIENNE)

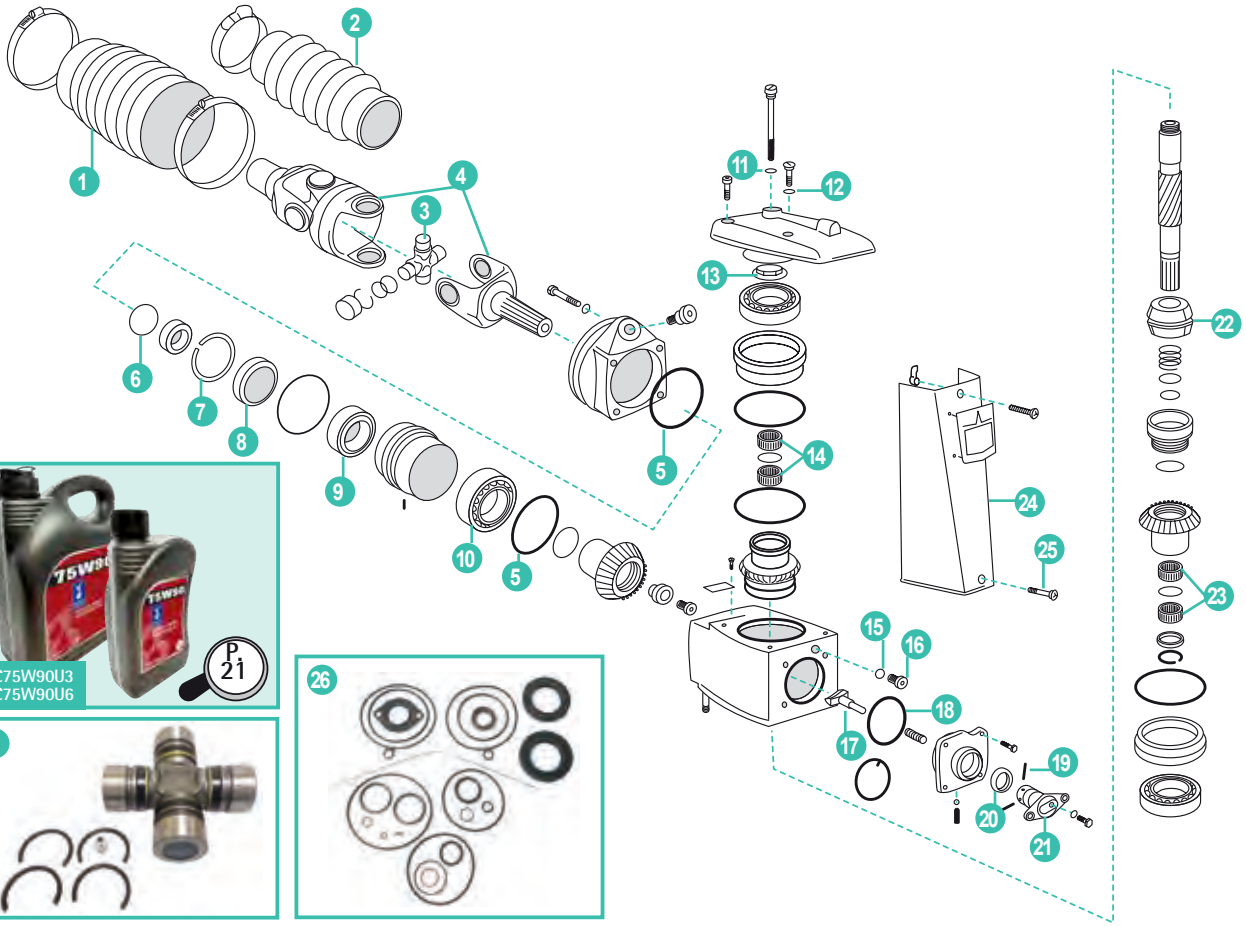

	REF	OEM				
1	REC876294	876294	FUELLE CRUCETA	U-JOINT BELLOWS	MANICOTTO STAFFA DI POPPA	SOUFFLET DE CARDAN
2	REC876633	876633	FUELLE ESCAPE CON FLAP	EXHAUST BELLOWS WITH FLAPPERS	CUFFIA SCARICO CON VALVOLA	SOUFFLET D'ECHAPPEMENT A CLAPET
	REC876631	876631	FUELLE ESCAPE SIN FLAP	EXHAUST BELLOWS WITHOUT FLAPPERS	CUFFIA SCARICO SENZA VALVOLA	SOUFFLET D'ECHAP 200 - 290DP
3	REC75832T	853255	CRUCETA CARDAN	U-JOINT	CROCETTA CARDANO	CROISILLON DE CARDAN
4	RM3860230	3860230	EJE CARDAN 27 ESTRÍAS	YOKE 27 SPLINE	ASSE CARDANO 27 DENTI	CARDAN 27 DENTS
5	REC925256	925256	ARO TÓRICO	O-RING FOR SEALING RING	O-RING	JOINT TORIQUE
6	REC832675	832675	ARO TÓRICO (280, 290, SP, DP)	SEALING RING (280, 290, SP, DP)	O-RING (280, 290, SP, DP)	JOINT TORIQUE (280, 290, SP, DP)
7	REC956000	956000	ARO TÓRICO	O-RING	O-RING	JOINT TORIQUE
8	REC839253	839253	RETÉN ACEITE (280, 290, SP, DP)	OIL SEAL FOR (280, 290, SP, DP)	PARAOLIO (280, 290, SP, DP)	JOINT SPI (280, 290 SP, DP)
	REC942615	942615	RETÉN ACEITE (200, 250, 270)	OIL SEAL FOR (200, 250, 270)	PARAOLIO (200, 250, 270)	JOINT SPI (200, 250, 270)
9	REC183247	183247	COJINETE	BEARING	CUSCINETTO	ROULEMENT
10	REC3850852	3850852	COJINETE	BEARING	CUSCINETTO	ROULEMENT
11	REC955974	955974	ARO VARILLA ACEITE	O-RING FOR DIPSTICK	O-RING ASTICELLA OLIO	JOINT TORIQUE
12	REC955989	955989	ARO TÓRICO	O-RING	O-RING	JOINT TORIQUE
13	REC832669	832669	JUNTA RETÉN TAPA	GASKET/SEAL FOR TOP COVER	GUARNIZIONE COPERCHIO	JOINT COUVERCLE
14	REC853542	853542	COJINETE (70, 275, 280, 290, DP-A, DP-B)	BEARING (70, 275, 280, 290, DP-A, DP-B)	CUSCINETTO (70, 275, 280, 290, DP-A, DP-B)	ROULEMENT (70, 285, 280, 290, DP-A, DP-B)
	REC3857176	3857176	COJINETE (SP-A1, A2, C, C1, DPA1, A2, B1, C, D, D1, E, G, DPX, S, S1, SX)	BEARING (SP-A1, A2, C, C1, DPA1, A2, B1, C, D, D1, E, G, DPX, S, S1, SX)	CUSCINETTO (SP-A1, A2, C, C1, DPA1, A2, B1, C, D, D1, E, G, DPX, S, S1, SX)	ROULEMENT (SP-A1, A2, C, C1, DPA1, A2, B1, C, D, D1, E, G, DPX, S, S1, SX)
15	REC897682	897682	JUNTA	GASKET	GUARNIZIONE	JOINT
16	RM981965	981965	TORNILLO TAPÓN	OIL PLUG	BULLONE TAPPO	BOUCHON
17	RM3856502	3856502	PUNTERA CONO SELECTOR	GEAR DOG	PUNTO CONO SELETTORE	DOIGT DE SELECTEUR
18	REC925093	925093	ARO TÓRICO	O-RING	O-RING	JOINT TORIQUE
19	REC951924		PASADOR	PIN	SPINOTTO	GOUPILLE
20	REC853868	853868	RETÉN ACEITE	OIL SEAL FOR SHIFT SHAFT	PARAOLIO	JOINT SPI
21	REC3856008	3856008	PISTÓN SELECTOR	SHIFT PLUNGER	PISTONE SELETTORE	SÉLECTEUR DE VITESSE
22	RM3807613	3807613	CONO SELECTOR	SLIDING SLEEVE	CONO SELETTORE	CONE D EMBRAYAGE
23	RM3852390	3852390	COJINETE	BEARING	CUSCINETTO	ROULEMENT
24	REC832570	832570	TAPA TRASERA	REAR COVER	COPERCHIO POSTERIORE	COUVERCLE ARRIÈRE
25	REC941816	941816	TORNILLO INFERIOR TAPA TRASERA	REAR COVER LOWER SCREW	VITE INFERIORE, COPERCHIO	VIS INFÉRIEUR COUVERCLE ARRIÈRE
26	REC876266	876266	KIT DE RETENES AQ200, 290, AQSP, AQDP	SEAL KIT (AQ200, 290, AQSP, AQDP)	KIT RIPARAZIONE (AQ200, 290, AQSP, AQDP)	KIT JOINTS (AQ200, 290, AQSP, AQDP)

PARTE SUPERIOR AQUAMATIC (MODERNA) — UPPER HOUSING (NEW TYPE) — PARTE SUPERIORE AQUAMATIC (MODERNO) — PARTIE SUPÉRIEURE AQUAMATIC (MODERNE)

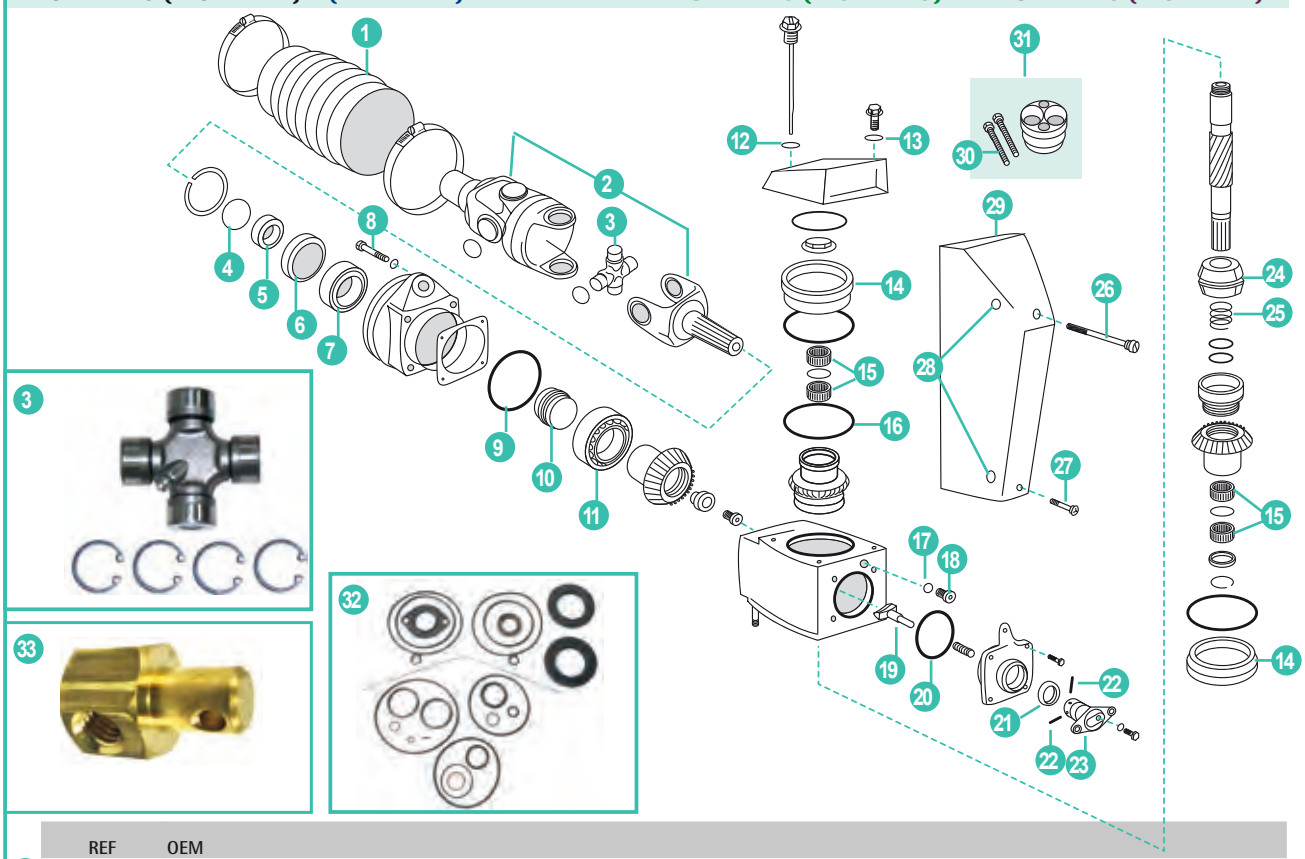

	REF	OEM				
1	REC876294	876294	FUELLE CRUCETA	U-JOINT BELLOWS	MANICOTTO STAFFA DI POPPA	SOUFFLET DE CARDAN
2	RM3860230	3860230	KIT TRANSMISION (290SP, DP)	GEAR UNIVERSAL JOINT (290SP, DP)	KIT TRASMISSIONE (290SP, DP)	CARDAN COMPLET (290SP, DP)
3	REC3860232	3860232	CRUCETA CARDAN (290)	GEAR SPIDER (290)	CROCETTA CARDANO (290)	CROISILLON DE CARDAN (290)
4	REC956000	956000	ARO TÓRICO	O-RING	O-RING	JOINT TORIQUE
5	REC832675	832675	ARO TÓRICO	SEALING RING	O-RING	JOINT TORIQUE
6	REC839253	839253	RETÉN	SEALING RING	PARAOLIO	JOINT SPI
7	REC183247	183247	COJINETE	BEARING	CUSCINETTO	ROULEMENT
8	REC984068 REC956590	984068 956590	KIT 4 TORNILLOS (70 mm) KIT 4 TORNILLOS (63 mm)	KIT 4 SCREWS (70 mm) KIT 4 SCREWS (63 mm)	KIT 4 VITI (70 mm) KIT 4 VITI (63 mm)	KIT 4 VIS (70 mm) KIT 4 VIS (63 mm)
9	REC967344	967344	ARO TÓRICO	O-RING	O-RING	JOINT TORIQUE
10	REC853484	853484	CASQUILLO	BUSHING	BOCCOLA	BAGUE
11	REC3850852	3850852	COJINETE	BEARING	CUSCINETTO	ROULEMENT
12	REC955989	955989	ARO TÓRICO	O-RING	O-RING	JOINT TORIQUE
13	REC955974	955974	ARO VARILLA ACEITE	O-RING FOR DIPSTICK	O-RING ASTICELLA OLIO	JOINT DE VIDANGE
14	REC3857176	3857176	COJINETE	BEARING	CUSCINETTO	ROULEMENT
15	RM3852390	3852390	COJINETE	BEARING	CUSCINETTO	ROULEMENT
16	REC832669	832669	JUNTA	GASKET	GUARNIZIONE	JOINT
17	REC897682	897682	JUNTA	GASKET	GUARNIZIONE	JOINT
18	RM981965	981965	TAPÓN	CAP	TAPPO	BOUCHON
19	RM3856502	3856502	PUNTERA CONO SELECTOR	GEAR DOG	PUNTO CONO SELETTORE	DOIGT DE SELECTEUR
20	REC925093	925093	ARO TÓRICO	O-RING	O-RING	JOINT TORIQUE
21	REC853868	853868	RETÉN	SEALING RING	PARAOLIO	JOINT SPI
22	REC951924	951924	PASADOR LEVA SELECTOR	PIN CAM SELECTOR	SPINOTTO CAMME SELETTORE	GOUPILLE ARBRE
23	REC3856008	3856008	PISTON SELECTOR	SHIFT PLUNGER	PISTONE SELETTORE	SÉLECTEUR DE VITESSE
24	RM3807613	3807613	CONO SELECTOR	GEAR SLIDING SLEEVE	CONO SELETTORE	CONE D EMBRAYAGE
25	REC3852296	3852296	RESORTE	SPRING	MOLLA	RESSORT
26	RM872027	872027	TORNILLO	SCREW	VITE	VIS
27	RM854661	854661	TORNILLO	SCREW	VITE	VIS
28	REC925052	905052	TÓRICA	O-RING	O-RING	JOINT TORIQUE
29	RM3857148	3857148	TAPA	COVER	COPERCHIO	COUVERCLE
30	REC941807	941807	TORNILLO HORQUILLA	SCREW	VITE	VIS
31	REC852705	852705	DADO DIRECCION	PIVOT PIN	DADO	PIVOT
32	REC876266	876266	KIT DE RETENES (AQ200, 290, AQSP/DP)	SEAL KIT (AQ200, 290, AQSP/DP)	KIT RIPARAZIONE (AQ200, 290, AQSP/DP)	KITS JOINTS D'EMBASE (AQ200, 290, AQSP/DP)
33	REC22336734	22336734	CUBO	HUB	CUBO	CONNECTEUR CÂBLE DE COMMANDE

PARTE SUPERIOR SX | UPPER HOUSING SX | PARTE SUPERIORE SX | PARTIE SUPÉRIEUR SX

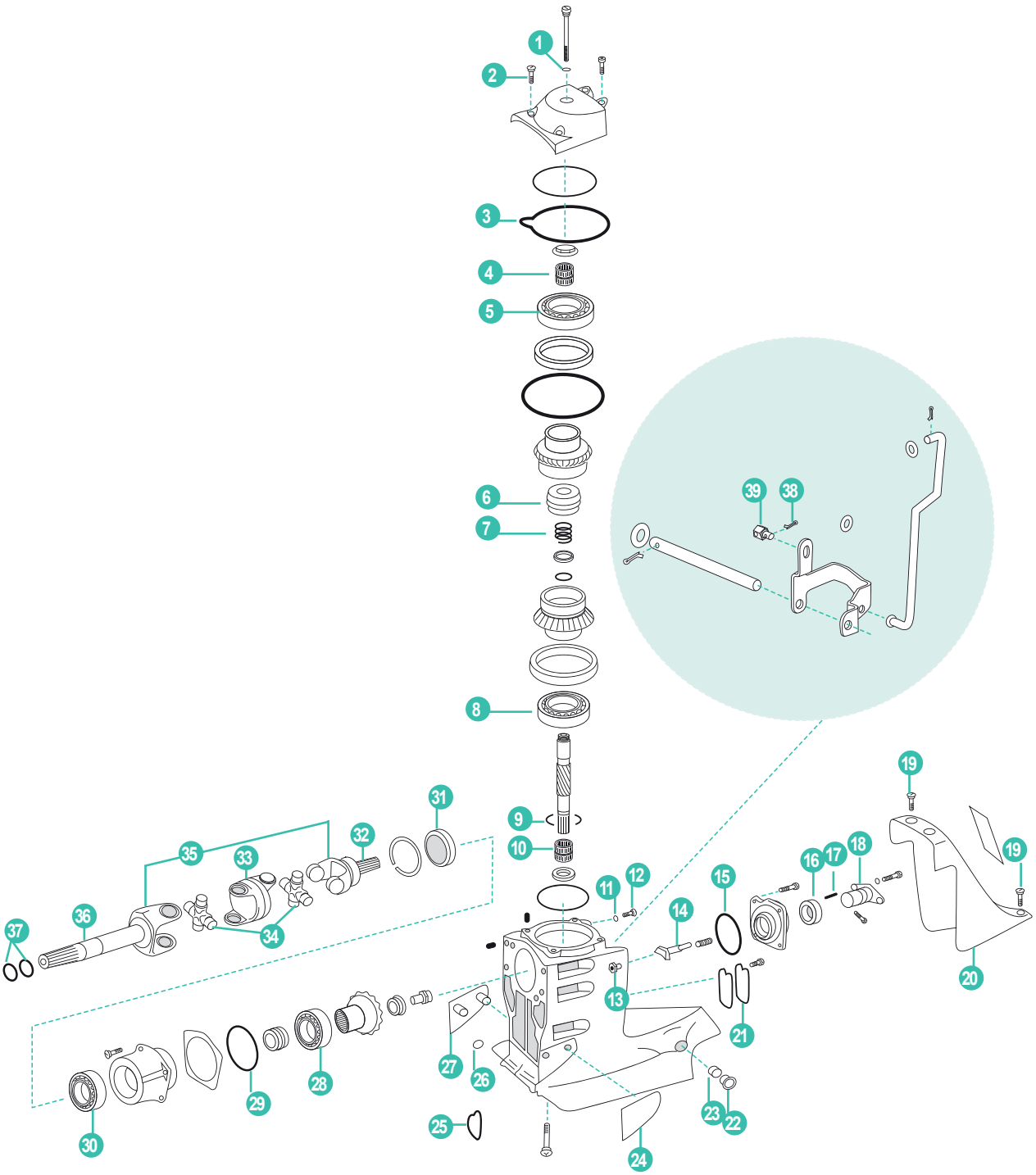

	REF	OEM				
1	REC3852045	3852045	ARO TÓRICO	O-RING	O-RING	JOINT TORIQUE
2	REC3852454	3852454	TORNILLO	SCREW	VITE	VIS
3	REC3852317	3852317	JUNTA	GASKET	GUARNIZIONE	JOINT
4	RM3852390	3852390	COJINETE	BEARING	CUSCINETTO	ROULEMENT
5	REC3857176	3857176	COJINETE	BEARING	CUSCINETTO	ROULEMENT
6	RM3807613	3807613	CONO SELECTOR	SLIDING SLEEVE	CONO SELETTORE	CONE D EMBRAYAGE
7	REC3852296	3852296	RESORTE	SPRING	MOLLA	RESSORT
8	REC3857176	3856176	COJINETE	BEARING	CUSCINETTO	ROULEMENT
9	REC3852295	3852295	CIRCLIP	CIRCLIP	CLIP	CLIP
10	RM3852390	3852390	COJINETE	BEARING	CUSCINETTO	ROULEMENT
11	REC3855081	3855081	JUNTA	GASKET	GUARNIZIONE	JOINT
12	REC22-67892A05	3854539	TAPÓN	CAP	TAPPO	BOUCHON
13	REC11-859135	3852648	TUERCA	NUT	DADO	ÉCROU
14	RM3856502	3856502	PUNTERA SELECTOR	DOG	PUNTO CONO SELETTORE	DOIGT DE SELECTEUR
15	REC925093	925093	ARO TÓRICO	O-RING	O-RING	JOINT TORIQUE
16	REC853868	853868	RETÉN	OIL SEAL	PARAOLIO	JOINT SPI
17	REC951924	951924	PASADOR LEVA SELECTOR	CLAMPING PIN	PASADOR LEVA SELETTORE	CLAVETTE DU SELECTEUR
18	REC3856008	3856008	PISTON SELECTOR	SHIFT PLUNGER	PISTONE SELETTORE	SÉLECTEUR DE VITESSE
19	REC3852568	3852568	TORNILLO	SCREW	VITE	VIS
20	RM3852418	3852418	TAPA	COVER	COPERCHIO	COUVERCLE
21	REC3852279	3852279	JUNTA	GASKET	GUARNIZIONE	JOINT
22	REC3853423	3853423	CASQUILLO	BUSHING	BOCCOLA	BAGUE
23	RM3853424	3853424	ARO TÓRICO	O-RING	O-RING	JOINT TORIQUE
24	REC3589522	3589522	TAPA BABOR	PLATE	COPERCHIO SINISTRA	PLAQUE BABORD
25	REC3852560	3852560	RETÉN	OIL SEAL	PARAOLIO	JOINT SPI
26	RM3852516	3852516	RETENEDOR	RETAINER	TENUTA	RONDELLE FREIN
27	REC3589524	3589524	TAPA ESTRIBOR	PLATE	COPERCHIO DESTRA	PLAQUE TRIBORD
28	REC3850852	3850852	COJINETE	BEARING	CUSCINETTO	ROULEMENT
29	REC967344	967344	ARO TÓRICO	O-RING	O-RING	JOINT TORIQUE
30	REC183247	183247	COJINETE	BEARING	CUSCINETTO	ROULEMENT
31	REC3852272	3852272	RETÉN	OIL SEAL	PARAOLIO	JOINT SPI
32	REC3850814	3850814	EJE CORTO CARDAN	YOKE	ALBERINO CARDANO	FOURCHE DE CARDAN COURTE
33	REC393831	3850813	CARDAN	SOCKET	CARDANO	ROTULE
34	REC3850812	3850812	CRUCETA CARDAN	UNIVERSAL JOINT	CROCETTA CARDANO	CROISILLON D'EMBASE
	REC3860842	3860842	TRANSMISIÓN COMPLETA	U-JOINT ASSEMBLY	KIT CARDANO	CARDAN COMPLET
35	RM3860842	3860842	TRANSMISIÓN COMPLETA (XDP-B, DP-SM, SMTD3, DPS-A, B, SX-A, M, M1, MTD)	U-JOINT ASSEMBLY (XDP-B, DP-SM, SMTD3, DPS-A, B, SX-A, M, M1, MTD)	KIT CARDANO (XDP-B, DP-SM, SMTD3, DPS-A, B, SX-A, M, M1, MTD)	CARDAN (XDP-B, DP-SM, SMTD3, DPS-A, B, SX-A, M, M1, MTD)
36	REC59830A7	3850815	EJE LARGO CARDAN	YOKE DRIVE-SHAFT	ALBERINO CARDANO	FOURCHE DE CARDAN
37	REC997368	3852565	ARO TÓRICO	O-RING	O-RING	JOINT TORIQUE
38	REC22336734	22336734	CUBO	HUB	CUBO	CONNECTEUR CABLE DE COMMANDE
39	REC3854480	3854480	PASADOR HENDIDO	PIN	SPINOTTO	GOUPILLE
40	REC3850594	3850594	KIT REPARACIÓN	GASKET KIT	KIT RIPARAZIONE	KIT JOINTS HAUT D'EMBASE
41	REC39631		KIT AROS TRANSON SX	OUTDRIVE SEAL KIT	KIT TENUTE TRANSON SX	KIT JOINT DE PLATINE SX

40



REF	
REC3850594	3850594

41



REF
REC39631



REC75W90U3
REC75W90U6

P. 24

PARTE SUPERIOR
SX-A, FWD, DPS-A, DPS-B

UPPER HOUSING
SX-A, FWD, DPS-A, DPS-B

PARTE SUPERIORE
SX-A, FWD, DPS-A, DPS-B

PARTIE SUPÉRIEUR
SX-A, FWD, DPS-A, DPS-B



REC75W90U3
REC75W90U6



REF	
REC3888917	3888917

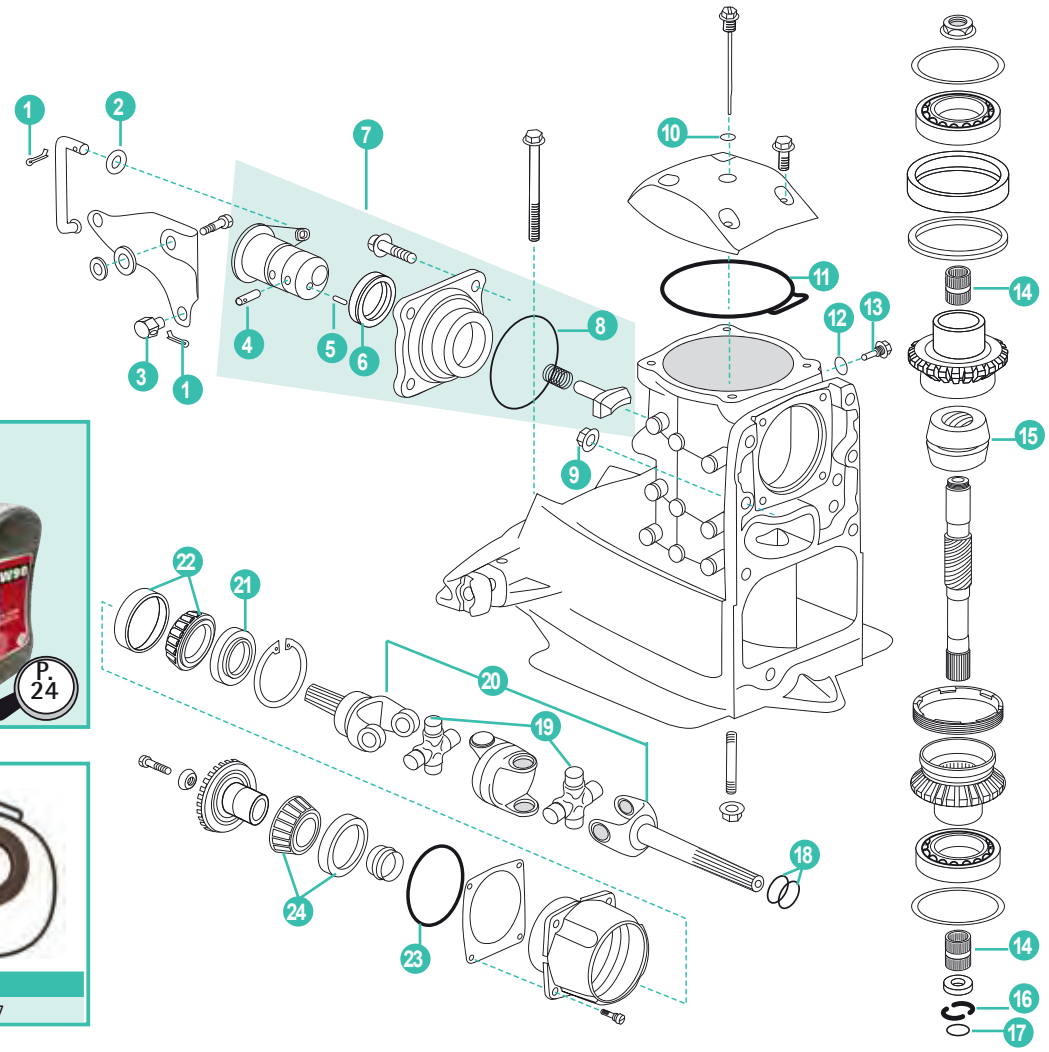

	REF	OEM				
1	REC3854480	3854480	PASADOR HENDIDO	PIN	SPINOTTO	GOUPILLE
2	PAGB/T97.1-8	3852193	ARANDELA	WASHER	RONDELLA	RONDELLE
3	REC22336734	22336734	CUBO	HUB	CUBO	CONNECTEUR CABLE DE COMMANDE
4	REC3862867	3862867	PASADOR	PIN	SPINOTTO	GOUPILLE
5	REC951936	951936	PASADOR TUBULAR	PIN	SPINOTTO	GOUPILLE
6	REC3863085	3863085	RETÉN	SEAL RING	O-RING TENUTA	JOINT SPI
7	REC21256410	21256410	MECANISMO CAMBIO	SHIFT MECHANISM	MECCANISMO DI CAMBIO	MÉCANISME DE CHANGEMENT
8	REC925093	925093	ARO TÓRICO	O-RING	O-RING	JOINT TORIQUE
9	REC11-859135	3852648	TUECA	NUT	DADO	ÉCROU
10	REC3852045	3852045	ARO TÓRICO	O-RING	O-RING	JOINT TORIQUE
11	REC3889782	3889782	JUNTA	GASKET	GUARNIZIONE	JOINT
12	REC3855081	3855081	ARO TÓRICO	O-RING	O-RING	JOINT TORIQUE
13	REC22-67892A05	3854539	TAPÓN	CAP	TAPPO	BOUCHON
14	RM3852390	3852390	COJINETE	BEARING	CUSCINETTO	ROULEMENT
15	RM3807613	3807613	CONO SELECTOR	SLIDING SLEEVE	CONO SELETTORE	CONE D EMBRAYAGE
16	REC3852295	3852295	CLIP	CLIP	CLIP	CLI`
17	REC949656	949656	ARO TÓRICO	O-RING	O-RING	JOINT TORIQUE
18	REC997368	997368	ARO TÓRICO	O-RING	O-RING	JOINT TORIQUE
19	REC3850812	3850812	CRUCETA	UNIVERSAL JOINT	CROCETTA CARDANO	CROISILLON D'EMBASE
20	RM3860842	3860842	TRANSMISIÓN COMPLETA	U-JOINT ASSEMBLY	KIT CARDANO	CARDAN COMPLET
21	REC3852272	3852272	RETÉN	SEAL	TENUTA	JOINT SPI
22	REC183247	183247	COJINETE RODILLO	BEARING	CUSCINETTO	ROULEMENT CONIQUE
23	REC967344	967344	ARO TÓRICO	O-RING	O-RING	JOINT TORIQUE
24	REC3850852	3850852	COJINETE	BEARING	CUSCINETTO	ROULEMENT CONIQUE
25	REC3888917	3888917	KIT JUNTAS	SEAL KIT	KIT GUARNIZIONE	KIT JOINTS HAUT D'EMBASE

PARTE SUPERIOR DP-G, DPX-A | UPPER HOUSING DP-G, DPX-A | PARTE SUPERIORE DP-G, DPX-A | PARTIE SUPÉRIEUR DP-G, DPX-A



REC75W140U6



REF
REC23034

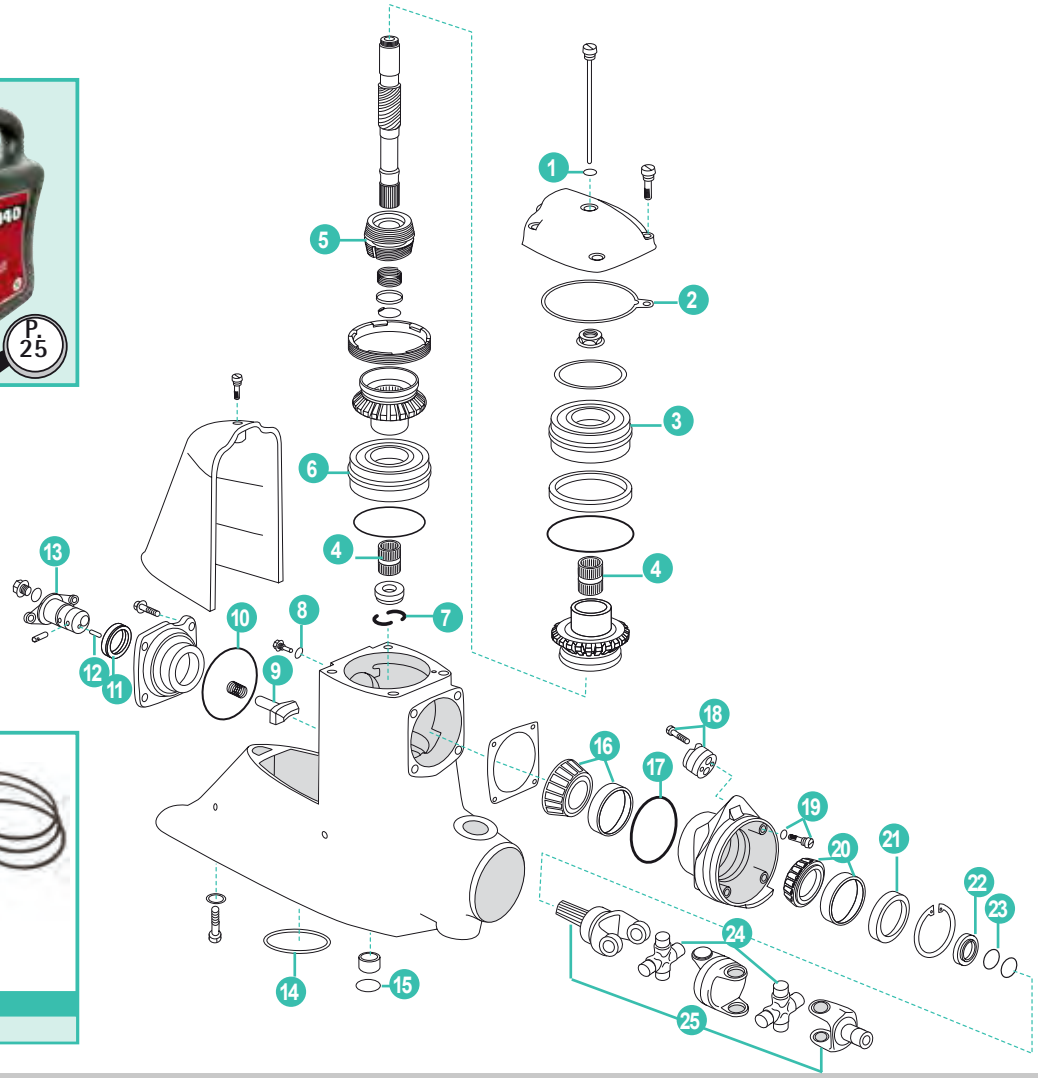

	REF	OEM				
1	REC3852045	3852045	ARO TÓRICO	O-RING	O-RING	JOINT TORIQUE
2	REC3860183	3860183	JUNTA	GASKET	GUARNIZIONE	JOINT SPI
3	REC3857176	3857176	COJINETE	BEARING	CUSCINETTO	ROULEMENT
4	RM3852390	3852390	COJINETE	BEARING	CUSCINETTO	ROULEMENT
5	RM3807613	3807613	CONO SELECTOR	GEAR SLIDING SLEEVE	CONO SELETTORE	CONE D EMBRAYAGE
6	REC3857176	3857176	COJINETE	BEARING	CUSCINETTO	ROULEMENT
7	REC3852295	3852295	CLIP	CLIP	CLIP	CLIP
8	REC3855081	3855081	JUNTA	GASKET	GUARNIZIONE	JOINT
9	RM3856502	3856502	PUNTERA CONO SELECTOR	GEAR DOG	PERNO CONO SELETTORE	DOIGT DE SELECTEUR
10	REC925093	925093	RETÉN	O-RING	O-RING	JOINT TORIQUE
11	REC853868	853868	RETÉN	SEAL	TENUTA	JOINT SPI
12	REC973593	973593	PIN	PIN	PIN	PIN
13	REC3856008	3856008	PISTÓN SELECTOR	SHIFT PLUNGER	PISTONE SELETTORE SHIFT PLUNGER	SÉLECTEUR DE VITESSE
14	REC925256	925256	ARO TÓRICO	O-RING	O-RING	JOINT TORIQUE
15	REC125017	125017	ARO TÓRICO	O-RING	O-RING	JOINT TORIQUE
16	REC3850852	3850852	COJINETE	BEARING	CUSCINETTO	ROULEMENT
17	REC967344	967344	ARO TÓRICO	O-RING	O-RING	JOINT TORIQUE
18	REC852705	852705	DADO DIRECCIÓN	PIVOT PIN	DADO	AXE DE PIVOTEMENT
19	REC984068	984068	KIT TORNILLOS	SCREW KIT	KIT VITE	KIT VISSES
20	REC183247	183247	COJINETE	BEARING	CUSCINETTO	ROULEMENT
21	REC839253	839253	RETÉN	SEAL	TENUTA	JOINT SPI
22	REC832675	832675	ARANDELA	WASHER	RONDELLA	RONDELLE
23	REC956000	956000	ARO TÓRICO	O-RING	O-RING	JOINT TORIQUE
24	REC3860232	3860232	CRUCETA CARDAN	UNIVERSAL JOINT	CROCETTA CARDANO	CROISILLON D'EMBASE
25	RM3860230	3860230	KIT TRANSMISION 290SP/DP	U-JOINT ASSEMBLY 290SP/DP	KIT CARDANO 290SP/DP	CARDAN 290SP/DP

PARTE INFERIOR AQUAMATIC | LOWER HOUSING AQUAMATIC | PARTE INFERIORE AQUAMATIC | PARTIE INFÉRIEURE AQUAMATIC

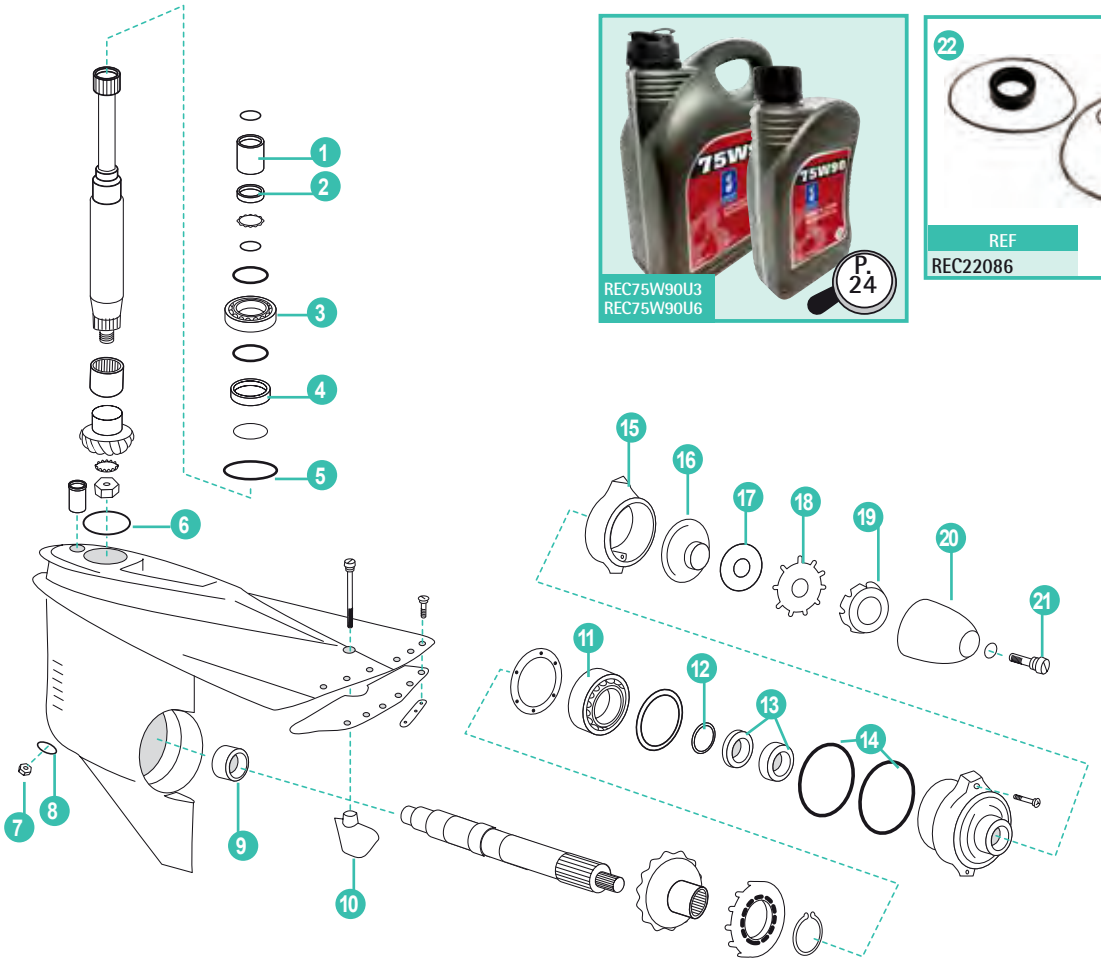

	REF	OEM				
1	RM3852268	3852268	CASQUILLO ESTRIADO	SPLINNED BUSHING	BOCCOLA	MANCHON CANNELE
2	REC969071	969071	TUERCA	NUT	DADO	ÉCROU
3	REC11072	11072	COJINETE	BEARING	CUSCINETTO	ROULEMENT
4	REC183374	183374	COJINETE	BEARING	CUSCINETTO	ROULEMENT
5	REC832191	832191	JUNTA	GASKET	GUARNIZIONE	JOINT
6	REC925256	925256	ARO TÓRICO	O-RING	O-RING	JOINT TORIQUE
7	RM852904	852904	TAPON	PLUG	TAPPO	BOUCHON
8	REC955974	955974	ARO TÓRICO	FILL SCREW O-RING	O-RING	JOINT TORIQUE
9	REC183390	183390	COJINETE AGUJAS	NEEDLE BEARING	CUSCINETTO A RULLI	ROULEMENT A AIGUILLES
10	REC854040	854040	TIMÓN	TRIM FIN	TIMONE	DERIVE
11	REC854541	854541	COJINETE	BEARING	CUSCINETTO	ROULEMNET
12	REC969073	969073	TUERCA	NUT	DADO	ÉCROU
13	REC897426	897426	RETENES EJE HELICE	PROP SHAFT SEALS	PARAOLIO ASSE ELICA	JOINT SPI ARBRE D'HÉLICE
14	REC925261	925261	ARO TÓRICO	O-RING	O-RING	JOINT TORIQUE
15	CMCMV-18	875815	ÁNODO Zn (AQ280SP, 290SP)	Zn ANODE (AQ280SP, 290SP)	ANODO Zn (AQ280SP, 290SP)	ANODE Zn (AQ280SP, 290SP)
	CMCMV-18A	875815	ÁNODO Al (AQ280SP, 290SP)	Al ANODE (AQ280SP, 290SP)	ANODO Al (AQ280SP, 290SP)	ANODE Al (AQ280SP, 290SP)
	CMV-17	875805	ÁNODO Zn (AQ250, 270, 275)	Zn ANODE(AQ250, 270, 275)	ANODO Zn (AQ250, 270, 275)	ANODE Zn (AQ250, 270, 275)
	REC875821	875821	ÁNODO Zn (AQ280DP, 290DP)	Zn ANODE (AQ280DP, 290DP)	ANODO Zn (AQ280DP, 290DP)	ANODE Zn (AQ280DP, 290DP)
	REC875821AL	875821	ÁNODO Al (AQ280DP, 290DP)	Al ANODE (AQ280DP, 290DP)	ANODO Al (AQ280DP, 290DP)	ANODE Al (AQ280DP, 290DP)
	REC23172849	876286	ÁNODO Zn (AQ120)	Zn ANODE (AQ120)	ANODO Zn (AQ120)	ANODE Zn (AQ120)
16	REC839423	839423	CORTALINEAS (AQ280SP, 290SP)	LINE CUTTER (AQ280SP, 290SP)	REGGISPINTA (AQ280SP, 290SP)	COUPE FIL (AQ280SP, 290SP)
	REC872082	872082	CORTALINEAS (AQ280, 290SP)	LINE CUTTER (AQ280SP, 290SP)	REGGISPINTA (AQ280SP, 290SP)	COUPE FIL (AQ280SP, 290SP)
	REC839534	839534	CORTALINEAS (AQ250, 270, 275)	LINE CUTTER (AQ250, 270, 275)	REGGISPINTA (AQ250, 270, 275)	COUPE FIL (AQ250, 270, 275)
17	REC850888	850888	ARANDELA PLASTICO	PLASTIC WASHER	RONDELLA PLASTICA	RONDELLE PLASTIQUE
18	REC897367	897367	ARANDELA CIERRE HELICE	PROP LOCK TAB WASHER	RONDELLA CIUSURA ELICA	RONDELLE FREIN D'HELICE
19	REC854047	854047	ESPACIADOR HELICE	PROP SPACER WASHER	SPESSORE ELICA	ENTRETOISE D'HELICE
20	REC854045	854045	CONO HÉLICE INCLUYE TORNILLO	PROP CONE NUT (INCLUDES SCREW)	CONO ELICA (VITE INCLUSA)	CONE D'HÉLICE AVEC VIS
21	REC850889	850889	TORNILLO CONO	SCREW FOR PROP CONE NUT	VITE CONO	VIS DE CONE
22	REC22086		KIT DE RETENES (⃠ DP: AQ200, AQ290, AQSP)	SEAL KIT (⃠ DP: AQ200, AQ290, AQSP)	KIT RIPARAZIONE (⃠ DP: AQ200, AQ290, AQSP)	KIT JOINTS (⃠ DP: AQ200, AQ290, AQSP)

PARTE INFERIOR AQUAMATIC DP | LOWER HOUSING AQUAMATIC DP | PARTE INFERIORE AQUAMATIC DP | PARTIE INFÉRIEURE AQUAMATIC DP

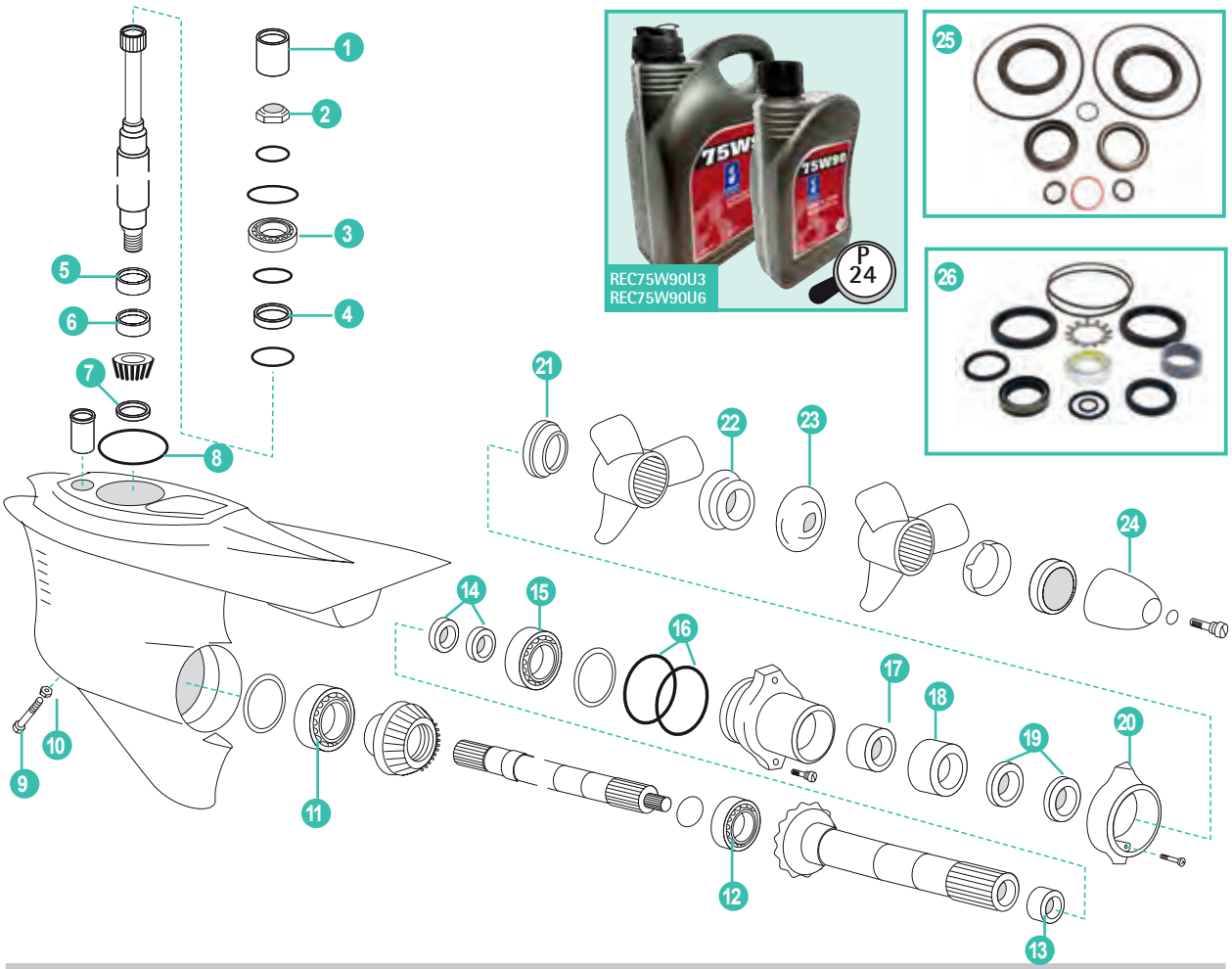

	REF	OEM				
1	RM3852268	3852268	MANGUITO ESTRIADO	SPLINED SLEEVE	MANICOTTO SCANALATO	MANCHON CANNELÉ
2	REC969071	969071	TUERCA REDONDA	ROUND NUT	DADO	ÉCROU
3	REC11072	11072	COJINETE	ROLLER BEARING	CUSCINETTO	ROULEMENT
4	REC183374	183374	COJINETE	BALL BEARING	CUSCINETTO	ROULEMENT
5	REC184682	184682	ARO INTERIOR	RING	O-RING INTERNO	BAGUE INTÉRIEURE
6	REC184654	184654	COJINETE AGUJAS	NEEDLE ROLLER BEARING	CUSCINETTO A RULLI	ROULEMENT A AIGUILLE
7	REC852212	852212	TUERCA	NUT	DADO	ÉCROU
8	REC925256	925256	ARO TÓRICO	O-RING	O-RING	JOINT TORIQUE
9	RM852904	852904	TAPÓN	CAP	TAPPO	BOUCHON DE VIDANGE
10	REC955974	955974	ARO TÓRICO	O-RING	O-RING	JOINT DE VIDANGE
11	REC11044	11044	COJINETE	ROLLER BEARING	CUSCINETTO	ROULEMENT
12	RM184691	184691	COJINETE	ROLLER BEARING	CUSCINETTO	ROULEMENT
13	REC183272	183272	COJINETE AGUJAS	NEEDLE ROLLER BEARING	CUSCINETTO A RULLI	ROULEMENT A AIGUILLE
14	REC22087		KIT RETENES Y AROS EJE HELICE	SEALING RING KIT	KIT TENUTE & ANELLI ASSE ELICA	KIT JOINTS SPI
15	REC184765	184765	COJINETE RODILLO	ROLLER BEARING	CUSCINETTO A RULLI	ROULEMENT
16	REC925258	925258	ARO TÓRICO	O-RING	FACIA TONDA	JOINT TORIQUE
17	REC184683	184683	ARO INTERIOR	RING	O-RING INTERNO	BAGUE INTÉRIEURE
18	REC183859	183859	COJINETE	NEEDLE ROLLER BUSHING	CUSCINETTO	ROULEMENT
19	REC851407	851407	RETEN EJE HELICE	SEALING RING	PARAOLIO ASSE ELICA	JOINT SPI
20	REC875821	875821	ÁNODO Zn	Zn ANODE	ANODO Zn	ANODE Zn
	REC875821AL	875821	ÁNODO Al	Al ANODE	ANODO Al	ANODE Al
21	REC3858457	3858457	CORTALINEAS FRONTAL	THRUST RING, FRONT	O-RING REGGISPINTA FRONTALE	COUPE FIL FRONTAL
22	RM3851334	3851334	TUERCA HELICE	PROPELLER NUT	DADO ELICA	ÉCROU D'HÉLICE
23	REC3858458	3858458	CORTALINEAS TRASERO	THRUST RING, REAR	O-RING REGGISPINTA POSTERIORE	COUPE FIL ARRIÈRE
24	RM872549	872549	KIT TUERCA HELICE Ø 20 mm.	PROPELLER CONE Ø 20 mm	KIT ELICA Ø 20 mm	KIT CONE D'HÉLICE Ø 20 mm
	RM872614	872614	KIT TUERCA HELICE Ø 16 mm.	PROPELLER CONE Ø 16 mm	KIT ELICA Ø 16 mm	KIT CONE D'HÉLICE Ø 16 mm
25	REC22087		KIT AQ280DP, 290DP, DP	KIT AQ280DP, 290DP, DP	KIT AQ280DP, 290DP, DP	KIT JOINTS 280DP, 290DP, DP
26	REC876267		KIT DP-C1, D1, E DPX-S, S1	KIT DP-C1, D1, E DPX-S, S1	KIT DP-C1, D1, E DPX-S, S1	KIT JOINTS DP-C1, D1, E DPX-S, S1

PARTE INFERIOR SX | LOWER HOUSING SX | PARTE INFERIORE SX | PARTIE INFÉRIEURE SX







	REF	OEM				
1	RM3852268	3852268	CASQUILLO	BUSHING	BOCCOLA	MANCHON CANNELE
2	REC3852866	3852866	ARO TÓRICO	WASHER	O-RING	JOINT TORIQUE
3	REC31-86748A1	3854250	COJINETE	BEARING	CUSCINETTO	ROULEMENT
4	REC3853934	3853934	COJINETE	BEARING	CUSCINETTO	ROULEMENT
5	REC3855411	3855411	ANODO Zn	ANODE Zn	ANODO Zn	ANODE Zn
	REC3863193AL	3863193	ÁNODO Al	ANODE Al	ANODO Al	ANODE Al
6	REC3852959	3852959	ARO TÓRICO	O-RING	O-RING	JOINT TORIQUE
7	REC3852315	3852315	CASQUILLO GOMA	RUBBER INSERT	BOCCOLA IN GOMMA	BAGUE IN CAOUTCHOUC
8	RM3860252	3860252	TUBO DE AGUA	WATER TUBE	TUBO DELL'ACQUA	DURITE D'EAU
9	REC3854595	3854595	RETÉN	SEAL	PARAOLIO	JOINT SPI
10	REC3855081	3855081	ARANDELA	WASHER	RONDELLA	RONDELLE
11	REC22-67892A05	3854539	TORNILLO	SCREW	VITE	VIS
12	REC854040	854040	TIMÓN	TRIM TAB	TIMONE	DERIVE
13	REC3850942	3850942	COJINETE	BEARING	CUSCINETTO	ROULEMENT
14	REC3857675	3857675	EJE HÉLICE	PROP SHAFT	ASSE ELICA	ARBRE D'HÉLICE
15	REC31-66668A1	3854249	COJINETE	BEARING	CUSCINETTO	ROULEMENT
16	REC3852865	3852865	ARO TÓRICO	WASHER	RONDELLA	JOINT TORIQUE
17	REC3863090	3863090	RETÉN	SEAL	TENUTA	JOINT SPI
18	RM3858051	3858051	DIÁBOLO	HOUSING BEARING	DIAVOLO	DIABOLO
19	REC126870	3852020	CIERRE HÉLICE	THRUST WASHER	CHIUSURA ELICA	ÉCROU D'HÉLICE
20	REC3852350	3852350	TOPE HÉLICE	THRUST HUB	FERMO PER ELICA	RONDELLE BUTEE D'HELICE
21	REC398042	3850984	KIT TUERCA HÉLICE	PROP & NUT KEEPER	KIT DADO ELICA	KIT ECROU D'HELICE
22	REC3852056	3852056	PASADOR	PIN	COPPIGLIA	GOUPILLE
23	REC3855275	3855275	KIT REPARACIÓN	REPAIR KIT	KIT RIPARAZIONE	KIT JOINTS
24	REC3856002	3856002	KIT REPARACIÓN	REPAIR KIT	KIT RIPARAZIONE	KIT JOINTS

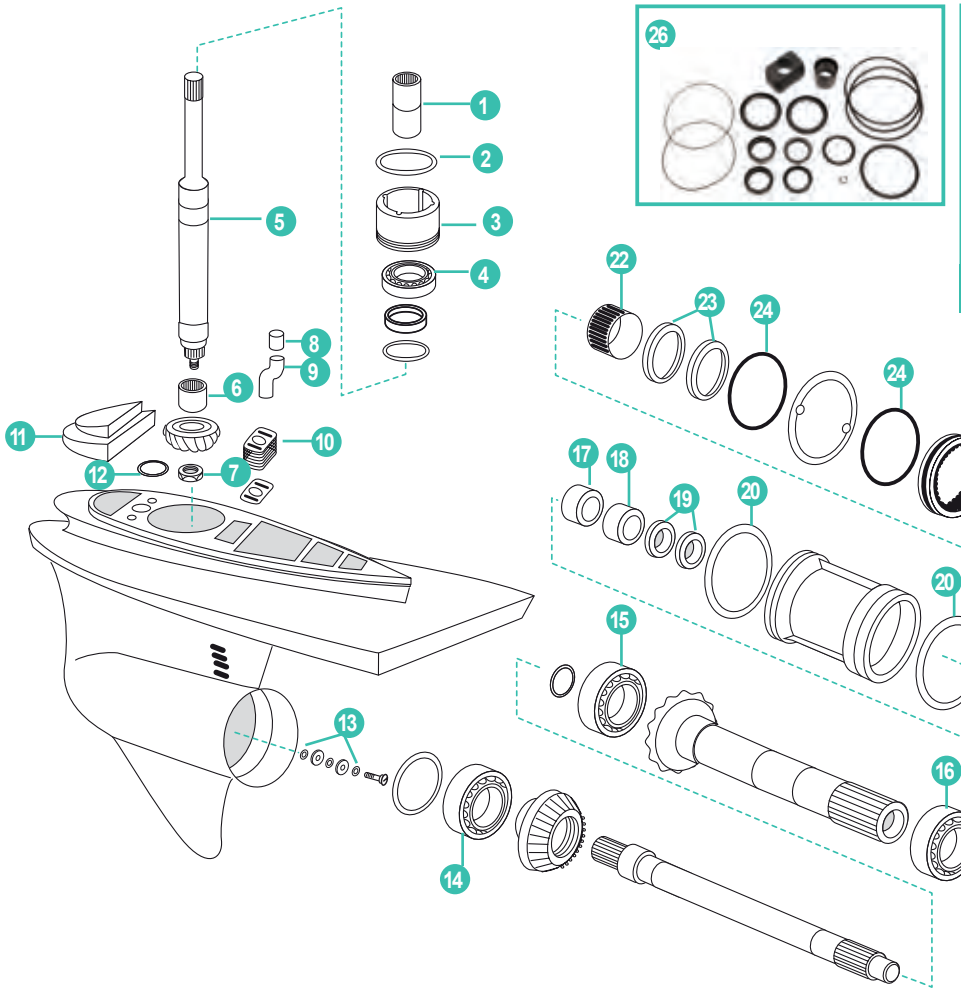



	REF	OEM				
1	RM3852268	3852268	CASQUILLO ESTRIADO	SPLINED SLEEVE	CAPPUCCIO	MANCHON CANNELÉ
2	REC3852866	3852866	ARO TÓRICO	O-RING	O-RING	JOINT TORIQUE
3	REC31-86748A1	3854250	COJINETE RODILLO	BEARING	CUSCINETTO	ROULEMENT
4	REC31-66668A1	3854249	COJINETE	BEARING	CUSCINETTO	ROULEMENT
5	REC184682	184682	ANILLO INTERIOR	RING	O-RING	JOINT TORIQUE
6	REC184654	184654	COJINETE DE RODILLO	BEARING	CUSCINETTO	ROULEMENT
7	REC852212	852212	TUERCA	NUT	DADO	ÉCROU
8	REC3852315	3852315	CASQUILLO GOMA	RUBBER SEAL	PARAOLIO IN GOMMA	BAGUE CAOUTCHOUC
9	RM3860252	3860252	TUBO	PIPE	TUBO	DURITE
10	REC3854595	3854595	RETÉN	SEAL	TENUTA	JOINT SPI
11	REC3855411	3855411	ANODO Zn	ANODE Zn	ANODO Zn	ANODE Zn
	REC3863193AL	3863193	ÁNODO Al	ANODE Al	ANODO Al	ANODE Al
12	REC3852959	3852959	ARO TÓRICO	O-RING	O-RING	JOINT TORIQUE
13	REC955893	955893	ARANDELAS	WASHERS	RONDELLE	RONDELLE
14	REC11044	11044	COJINETE DE RODILLO	BEARING	CUSCINETTO	ROULEMENT
15	RM184691	194691	COJINETE DE RODILLO	BEARING	CUSCINETTO	ROULEMENT
16	REC184765	184765	COJINETE DE RODILLO	BEARING	CUSCINETTO	ROULEMENT
17	REC184683	184683	ANILLO INTERIOR	RING	O-RING	BAGUE INTERIEURE
18	REC183272	183272	COJINETE DE RODILLO	BEARING	CUSCINETTO	ROULEMENT
19	REC853808	853808	RETÉN	SEALING RING	O-RING TENUTA	JOINT SPI
20	REC3854625	3854625	ARO TÓRICO	O-RING	O-RING	JOINT TORIQUE
21	REC955981	955981	ARO TÓRICO	O-RING	O-RING	JOINT TORIQUE
22	REC183859	183859	COJINETE DE RODILLO	BEARING	CUSCINETTO	ROULEMENT DE DIABOLO
23	REC851407	851407	RETÉN	SEALING RING	O-RING TENUTA	JOINT SPI
24	REC946438	946438	ARO TÓRICO	O-RING	O-RING	JOINT TORIQUE
25	REC3854624	3854624	ARO TÓRICO	O-RING	O-RING	JOINT TORIQUE
26	REC3856002	3856002	KIT REPARACIÓN	REPAIR KIT	KIT RIPARAZIONE	KIT JOINTS

PARTE INFERIOR
DP-SM

LOWER HOUSING
DP-SM

PARTE INFERIORE
DP-SM

PARTIE INFÉRIEURE
DP-SM

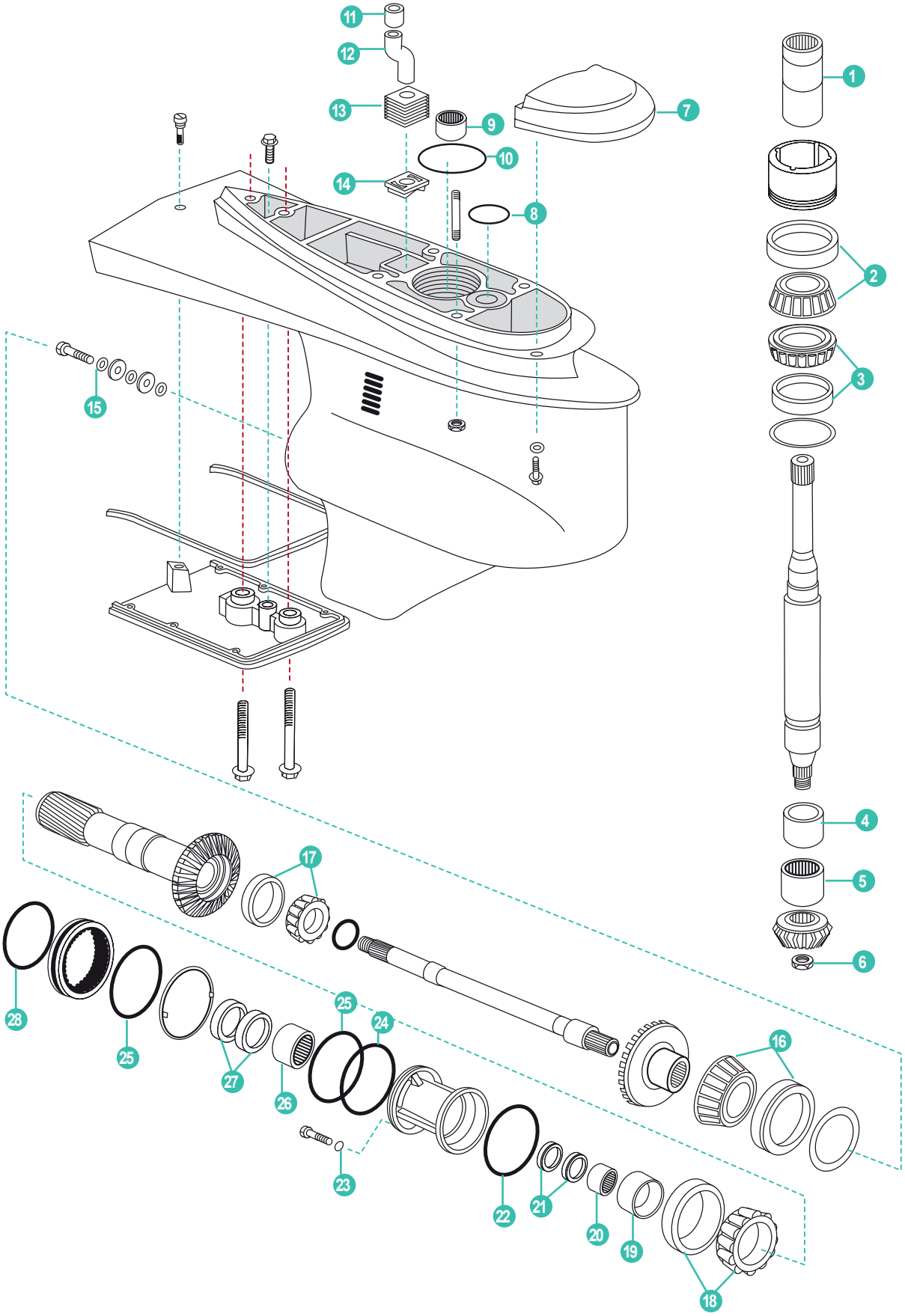

	REF	OEM				
1	RM3852268	3852268	CASQUILLO ESTRIADO	SPLINED SLEEVE	CAPPUCCIO	MANCHON CANNELÉ
2	REC31-86748A1	183512	COJINETE DE RODILLO	BEARING	CUSCINETTO	ROULEMENT
3	REC31-66668A1	3854249	COJINETE DE RODILLO	BEARING	CUSCINETTO	ROULEMENT
4	REC184682	184682	ANILLO INTERIOR	RING	O-RING	BAGUE INTERIEURE
5	REC184654	184654	COJINETE DE RODILLO	BEARING	CUSCINETTO	ROULEMENT A AIGUILLE
6	REC852212	852212	TUERCA	NUT	DADO	ÉCROU
7	REC3855411	3855411	ANODO Zn	ANODE Zn	ANODO Zn	ANODE Zn
	REC3863193AL	3863193	ÁNODO Al	ANODE Al	ANODO Al	ANODE Al
8	REC3852959	3852959	ARO TÓRICO	O-RING	FASCIA TONDA	JOINT TORIQUE
9	REC184654	184654	COJINETE	NEEDLE BEARING	CUSCINETTO	ROULEMENT
10	REC3852866	3852866	ARO TÓRICO	O-RING	FASCIA TONDA	JOINT TORIQUE
11	REC3852315	3852315	CASQUILLO GOMA	RUBBER SEAL	PARAOLIO IN GOMMA	BAGUE CAOUTCHOUC
12	RM3860252	3860252	TUBO	PIPE	TUBO	DURITE
13	REC3854595	3854595	RETÉN	SEAL	PARAOLIO	JOINT SPI
14	REC3854601	3854601	SOPORTE TUBO AGUA	RETAINER	SUPPORTO TUBO ACQUA	SUPPORT TUBE D'EAU
15	REC955893	955893	ARANDELA	WASHER	RONDELLA	RONDELLE
16	REC11044	11044	COJINETE DE RODILLO	BEARING	CUSCINETTO	ROULEMENT CONIQUE
17	RM184691	184691	COJINETE DE RODILLO	BEARING	CUSCINETTO	ROULEMENT CONIQUE
18	REC184765	184765	COJINETE DE RODILLO	BEARING	CUSCINETTO	ROULEMENT CONIQUE
19	REC184683	184683	ANILLO INTERIOR	CONE	O-RING INTERNO	BAGUE INTERIEURE
20	REC183272	183272	COJINETE DE RODILLO	BEARING	CUSCINETTO	ROULEMENT A AIGUILLE
21	REC853808	853807+853808	KIT RETÉN	KIT SEAL	KIT TENUTA	KIT JOINTS SPI
22	REC3854625	3854625	ARO TÓRICO	O-RING	O-RING	JOINT TORIQUE
23	REC955981	955981	ARO TÓRICO	O-RING	O-RING	JOINT TORIQUE
24	REC3854625	3854625	ARO TÓRICO	O-RING	O-RING	JOINT TORIQUE
25	REC946438	946438	RETÉN	SEAL RING	O-RING TENUTA	JOINT SPI
26	REC183859	183859	COJINETE DE RODILLO	BEARING	CUSCINETTO	ROULEMENT A AIGUILLE
27	REC851407	851407	RETÉN	SEAL RING	O-RING TENUTA	JOINT SPI
28	REC3854624	3854624	ARO TÓRICO	O-RING	O-RING	JOINT TORIQUE
29	REC3856002	3856002	KIT REPARACIÓN	REPAIR KIT	KIT RIPARAZIONE	KIT JOINTS





PARTE INFERIOR
DPS-A, DPS-B

LOWER HOUSING
DPS-A, DPS-B

PARTE INFERIORE
DPS-A, DPS-B

PARTIE INFÉRIEURE
DPS-A, DPS-B



REC75W90U3
REC75W90U6



REF
REC23020

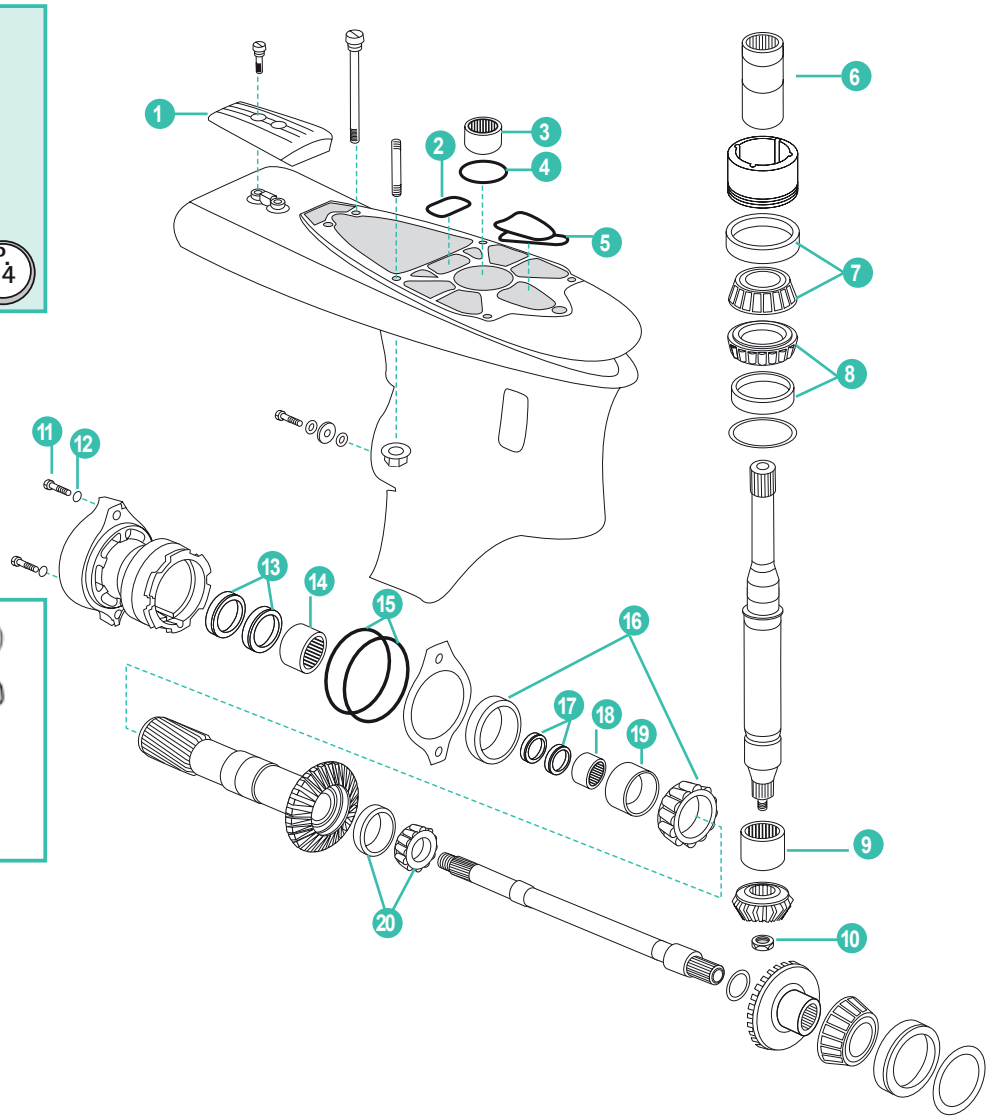

	REF	OEM				
1	REC3888814	3888814	KIT ÁNODOS Zn	ANODES Zn SET	KIT ANODI Zn	KIT ANODES Zn
	REC23164609AL	3888813	KIT ÁNODOS Al	ANODES Al SET	KIT ANODI Al	KIT ANODES Al
2	REC3889786	3889786	JUNTA	GASKET	GUARNIZIONE	JOINT
3	REC184654	184654	CASQUILLO DE RODILLO	BUSHING	BOCCOLA	BAGUE
4	REC3852866	3852866	ARO TÓRICO	O-RING	O-RING	JOINT TORIQUE
5	REC3889784	3889784	JUNTA	GASKET	GUARNIZIONE	JOINT
6	RM3852268	3852268	CASQUILLO ESTRIADO	SPLINED SLEEVE	CAPPUCCIO	MANCHON CANNELÉ
7	REC31-86748A1	3854250	COJINETE DE RODILLO	BEARING	CUSCINETTO	ROULEMENT CONIQUE
8	REC31-66668A1	3854249	COJINETE DE RODILLO	BEARING	CUSCINETTO	ROULEMENT CONIQUE
9	REC184654	184654	COJINETE	BEARING	CUSCINETTO	ROULEMENT A AIGUILLE
10	REC852212	852212	TUERCA	NUT	DADO	ÉCROU
11	REC22-67892A05	3854539	TORNILLO CON RETÉN CIERRE	DRAINING SCREW SET	VITE CON PARAOLIO CHIUSURA	BOUCHON DE VIDANGE MAGNETIQUE + JOINT
12	REC3855081	3855081	JUNTA	GASKET	GUARNIZIONE	JOINT
13	REC851407	851407	RETÉN EJE HÉLICE	SEAL	PARAOLIO ASSE ELICA	JOINT SPI, ARBRE D'HÉLICE
14	REC183859	183859	COJINETE	BEARING	CUSCINETTO	ROULEMENT A AIGUILLE
15	REC925259	925259	ARO TÓRICO	O-RING	O-RING	JOINT TORIQUE
16	REC184765	184765	COJINETE COLA	ROLLER BEARING	CUSCINETTO PIEDE	ROULEMENT CONIQUE
17	REC853808	853808 853807	RETENES EJE HÉLICE INTERIOR	SEAL RING PROPELLER SHAFT SET	PARAOLIO ASSE ELICA	KIT JOINTS
18	REC183272	183272	COJINETE DE AGUJAS	NEEDLE BEARING	CUSCINETTO	ROULEMENT A AIGUILLE
19	REC184683	184683	ARO INTERIOR	CONE	O-RING INTERNO	JOINT TORIQUE
20	RM184691	184691	COJINETE	BEARING	CUSCIENTTO	ROULEMENT CONIQUE
21	REC23020	3888822	KIT REPARACIÓN	REPAIR KIT	KIT RIPARAZIONE	KIT JOINTS



REC75W90U3
REC75W90U6

P. 24



REF
REC23022

	REF	OEM				
1	REC3888814	3888814	ANODO Zn	ANODE Zn	ANODO Zn	ANODE Zn
	REC23164609AL	3888813	ÁNODO Al	ANODE Al	ANODO Al	ANODE Al
2	REC3889786	3889786	JUNTA	GASKET	GUARNIZIONE	JOINT
3	REC3853934	3853934	COJINETE	BEARING	CUSCINETTO	ROULEMENT A AIGUILLE
4	REC3852866	3852866	ARO TÓRICO	O-RING	O-RING	JOINT TORIQUE
5	REC3889784	3889784	JUNTA	GASKET	GUARNIZIONE	JOINT
6	RM3852268	3852268	MANGUITO ESTRIADO	STRAIGHTED SLEEVE	MANICOTTO SCANALATO	MANCHON CANNELE
7	REC31-86748A1	3854250	COJINETE DE RODILLO	BEARING	CUSCINETTO	ROULEMENT CONIQUE
8	REC31-66668A1	3854249	COJINETE DE RODILLO	BEARING	CUSCINETTO	ROULEMENT CONIQUE
9	REC3853934	3853934	COJINETE	BEARING	CUSCINETTO	ROULEMENT A AIGUILLE
10	REC22-67892A05	3854539	TORNILLO	SCREW	VITE	VIS
11	REC3855081	3855081	ARO TÓRICO	O-RING	O-RING	JOINT TORIQUE
12	REC3863090	3863090	RETÉN	SEAL	TENUTA	JOINT SPI
13	REC925259	925259	ARO TÓRICO	O-RING	O-RING	JOINT TORIQUE
14	REC31-66668A1	3854249	COJINETE DE RODILLO	BEARING	CUSCINETTO	ROULEMENT CONIQUE
15	REC23022	3888821	KIT REPARACIÓN	REPAIR KIT	KIT RIPARAZIONE	KIT JOINTS

PARTE INFERIOR FWD | LOWER HOUSING FWD | PARTE INFERIORE FWD | PARTIE INFÉRIEURE FWD



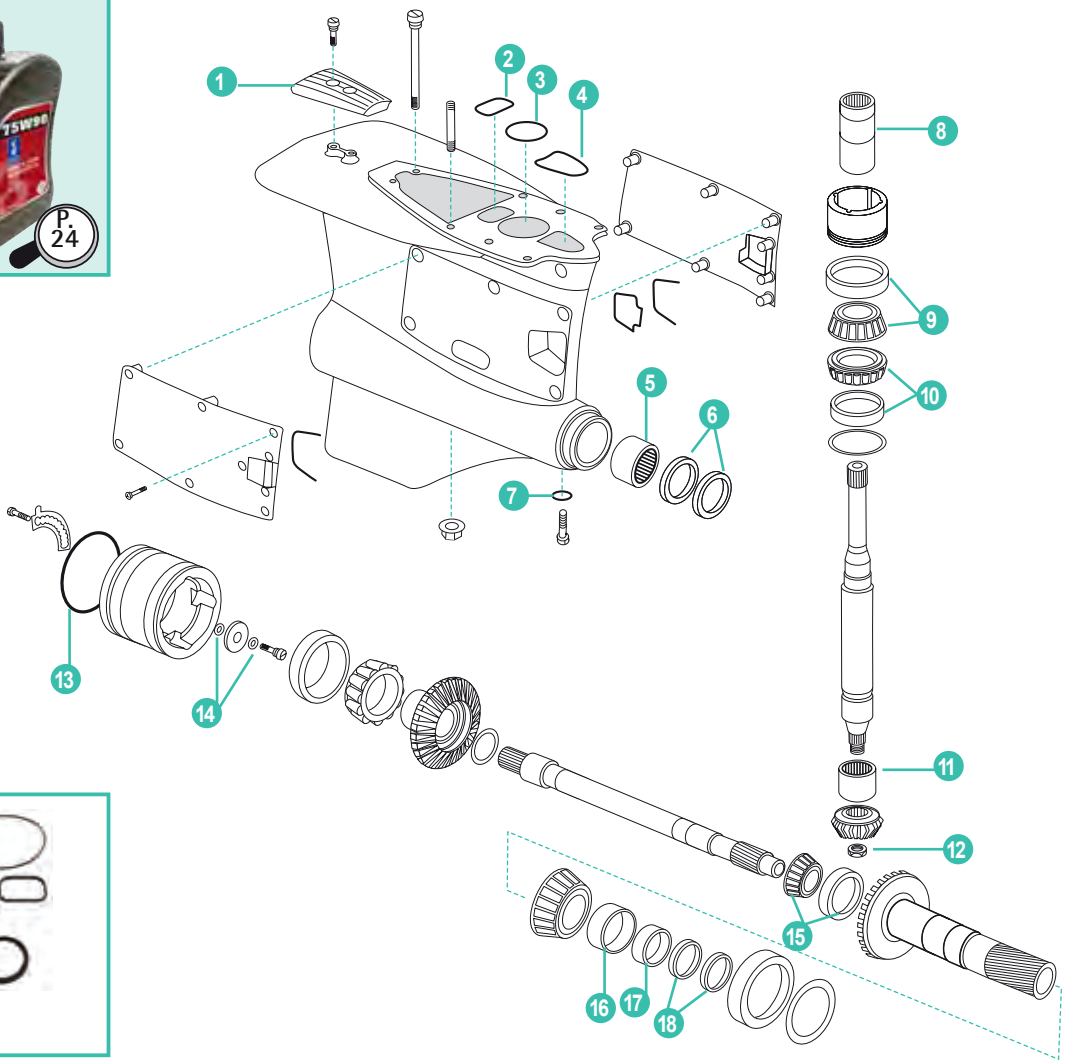



	REF	OEM				
1	REC3888814	3888814	ANODO Zn	ANODE Zn	ANODO Zn	ANODE Zn
	REC23164609AL	3888813	ÁNODO Al	ANODE Al	ANODO Al	ANODE Al
2	REC3889786	3889786	JUNTA	GASKET	GUARNIZIONE	JOINT
3	REC3852866	3852866	ARO TÓRICO	O-RING	O-RING	JOINT TORIQUE
4	REC22430456	22430456	JUNTA	GASKET	GUARNIZIONE	JOINT
5	REC183859	183959	COJINETE DE RODILLO	BEARING	CUSCINETTO	ROULEMENT A AIGUILLE
6	REC851407	851407	RETÉN	SEAL RING	O-RING TENUTA	JOINT SPI
7	REC3855081	3855081	ARO TÓRICO	O-RING	O-RING	JOINT TORIQUE
8	RM3852268	3852268	CASQUILLO ESTRIADO	SPLINED SLEEVE	CAPPUCCIO	MANCHON CANNELÉ
9	REC31-86748A1	3854250	COJINETE DE RODILLO	BEARING	CUSCINETTO	ROULEMENT CONIQUE
10	REC31-66668A1	3854249	COJINETE DE RODILLO	BEARING	CUSCINETTO	ROULEMENT CONIQUE
11	REC184654	184654	COJINETE	BEARING	CUSCINETTO	ROULEMENT A AIGUILLE
12	REC852212	852212	TUERCA	NUT	DADO	ÉCROU
13	REC925259	925259	ARO TÓRICO	RUBER O-RING	FASCIA TONDA	JOINT TORIQUE
14	REC955893	955893	ARANDELA	WASHER	RONDELLA	RONDELLE
15	RM184691	184691	COJINETE RODILLO	BEARING	CUSCINETTO	ROULEMENT CONIQUE
16	REC184683	184683	ARO INTERIOR	CONE	O-RING INTERNO	JOINT TORIQUE
17	REC183272	183272	COJINETE	BEARING	CUSCIENTTO	ROULEMENT A AIGUILLE
18	REC853808	853808	RETÉN	SEAL RING	ANELLO TENUTA	JOINT SPI
19	REC22612828	22612828	KIT REPARACIÓN	REPAIR KIT	KIT RIPARAZIONE	KIT JOINTS

PARTE INTERMEDIA AQUAMATIC — INTERMEDIATE HOUSING AQUAMATIC — PARTE INTERMEDIA AQUAMATIC — CARTER INTERMÉDIAIRE AQUAMATIC

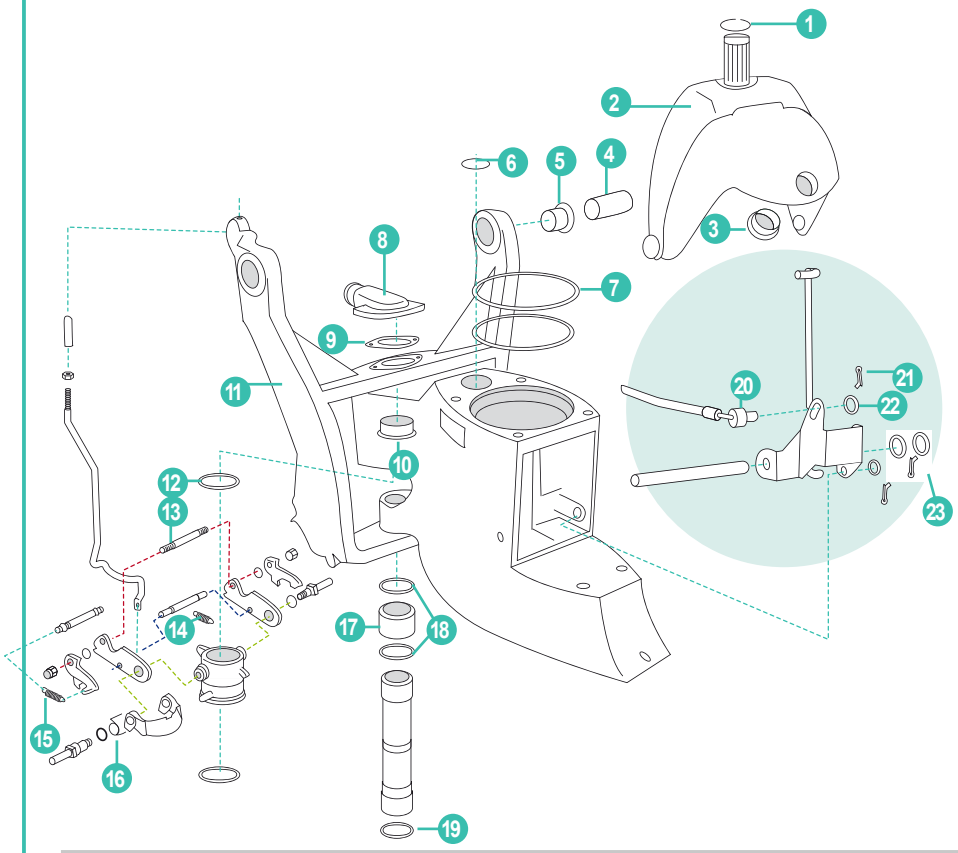







	REF	OEM				
1	REC839195	839195	RETEN BIELA (Horquilla estriada)	RING (Spline fork)	PAROLIO BIELLA (Forcella filettata)	BAGUE DE DIRECTION (Fusée cannelée)
	RM977313	977313	RETEN BIELA (Horquilla cuadrada)	RING (Square fork)	PAROLIO BIELLA (Forcella quadrata)	BAGUE DE DIRECTION (Fusée carrée)
2	RM873183	873183	HORQUILLA COLA	FORK	KIT FORCELLA PIEDE	KIT FUSEE DE DIRECTION
3	REC853048	853048	CASQUILLO	BUSHING	BOCCOLA	BAGUE
4	REC853175	853175	BULÓN	PIN	BULLONE	AXE PALIER
5	REC876278	826341	CASQUILLOS HORQUILLA (AQ) CON TILT ELÉCTRICO	TILT BUSHINGS (AQ) WITH ELECTRIC TILT	BOCCOLA FORCELLA (AQ) CON TILT ELETTRICO	BAGUES (AQ) TILT ÉLÉCTRIQUE
	REC832820	832820	CASQUILLOS HORQUILLA (AQ270T, 280T) CON POWER TRIM	TILT BUSHINGS (AQ270T, 280T) WITH POWER TRIM	BOCCOLA FORCELLA (AQ270T, 280T) CON POWER TRIM	BAGUES (AQ270T, 280T) POWER TRIM
	REC876279	853223	CASQUILLOS HORQUILLA (AQ290)	TILT BUSHINGS (AQ290)	BOCCOLA FORCELLA (AQ290)	BAGUES (AQ290)
	REC872096	872096	CASQUILLOS HORQUILLA (DP, DPD, DPE, DPG, DPH, DPX)	TILT BUSHINGS (DP, DPD, DPE, DPG, DPH, DPX)	BOCCOLA FORCELLA (DP, DPD, DPE, DPG, DPH, DPX)	BAGUES (DP, DPD, DPE, DPG, DPH, DPX)
6	REC125017	125017	ARO TÓRICO	O-RING	O-RING	JOINT TORIQUE
7	REC925259	925259	ARO TÓRICO	O-RING	O-RING	JOINT TORIQUE
8	REC832846	851452	PIPETA TOMA AGUA (AQ270T, 280T) CON POWER TRIM	WATER OUTLET (AQ270T, 280T) WITH POWER TRIM	PIPETTA PRESA ACQUA (AQ270T, 280T) CON POWER TRIM	PIPE DE PRISE D'EAU (AQ270T, 280T) POWER TRIM
	REC832846	854031	PIPETA TOMA AGUA (AQ200, 280) CON TILT Y AQ290	WATER OUTLET (AQ200, 280) WITH ELECTRIC TILT & (AQ290)	PIPETTA PRESA ACQUA (AQ200, 280) CON TILT E (AQ290)	PIPE DE PRISE D'EAU (AQ200, 280 AVEC TILT), AQ290
	REC872752	872752	PIPETA TOMA AGUA PLÁSTICO (DP, DPD, DPE, DPG, DPH, DPX)	WATER OUTLET-PLASTIC (DP, DPD, DPE, DPG, DPH, DPX)	PIPETTA PRESA ACQUA IN PLASTICA (DP, DPD, DPE, DPG, DPH, DPX)	PIPE DE PRISE D'EAU EN PLASTIQUE (DP, DPD, DPE, DPG, DPH DPX)
9	REC814356	814356	JUNTA PIPETA	GASKET-WATER OUTLET	GUARNIZIONE PIPETTA	JOINT DE PIPE D'EAU
10	REC814388	814388	ARO TUBO AGUA (AQ250, 270, 280)	SWIVEL BUSHING WATER PIPE (AQ250, 270, 280)	O-RING TUBO ACQUA (AQ250, 270, 280)	JOIN TORIQUE (AQ250, 270, 280)
11	RM854100	854100	HORQUILLA COLA (SP-A, A1, A2, DP-A, A1, A2, 290A, B1, DA2)	FORK (SP-A, A1, A2, DP-A, A1, A2, 290A, B1, DA2)	KIT FORCELLA PIEDE (SP-A, A1, A2, DP-A, A1, A2, 290A, B1, DA2)	FOURCHE (SP-A, A1, A2, DP-A, A1, A2, 290A, B1, DA2)
12	REC814390	814390	ARANDELA PLÁSTICO	PLASTIC WASHER	RONDELLA PLASTICA	RONDELLE PLASTIQUE
13	REC814419	814419	EJE	SHAFT REVERSE LOCK	ASSE	ARBRE
14	REC832534	832534	MUELLE	SPRING REVERSE LOCK	MOLLA	RESSORT
15	REC814332	814332	MUELLE	SPRING REVERSE LOCK	MOLLA	RESSORT
16	REC814396	814396	MUELLE	SPRING REVERSE LOCK	MOLLA	RESSORT
17	REC183391	183391	COJINETE	BEARING	CUSCINETTO	ROULEMENT A AIGUILLE
18	REC181620	181620	RETÉN	SEAL	PARAOLIO	JOINT SPI
19	REC941820	941820	ARO TÓRICO	O-RING	O-RING	JOINT TORIQUE
20	REC22336734	22336734	CUBO	HUB	CUBO	CONNECTEUR CÂBLE COMMANDE
21	REC17276	17276	PIN	PIN	SPINOTTO	GOUPILLE
22	REC940191	940191	ARANDELA	WASHER	RONDELLA	RONDELLE
23	REC17253	17253	KIT PASADOR + ARANDELA	KIT PIN + WASHER	KIT PIN + RONDELLA	GOUPILLE FENDUE ET RONDELLE
24	REC23170		KIT MUELLES COLA	SPRING SET	KIT MOLLE	KIT RESSORTS
25	RM854133	854133	GOMA PROTECTORA (AQ290 SP/DP)	TRANSOM SHIELD BUMP (AQ290 SP/DP)	GOMMA (AQ290 SP/DP)	SILENT BLOC CAOUTCHOUC (AQ290 SP/DP)

PARTE INTERMEDIA DP-E, DP-G, DP-C, DP-D | INTERMEDIATE HOUSING DP-E, DP-G, DP-C, DP-D | PARTE INTERMEDIA DP-E, DP-G, DP-C, DP-D | CARTER INTERMÉDIAIRE DP-E, DP-G, DP-C, DP-D

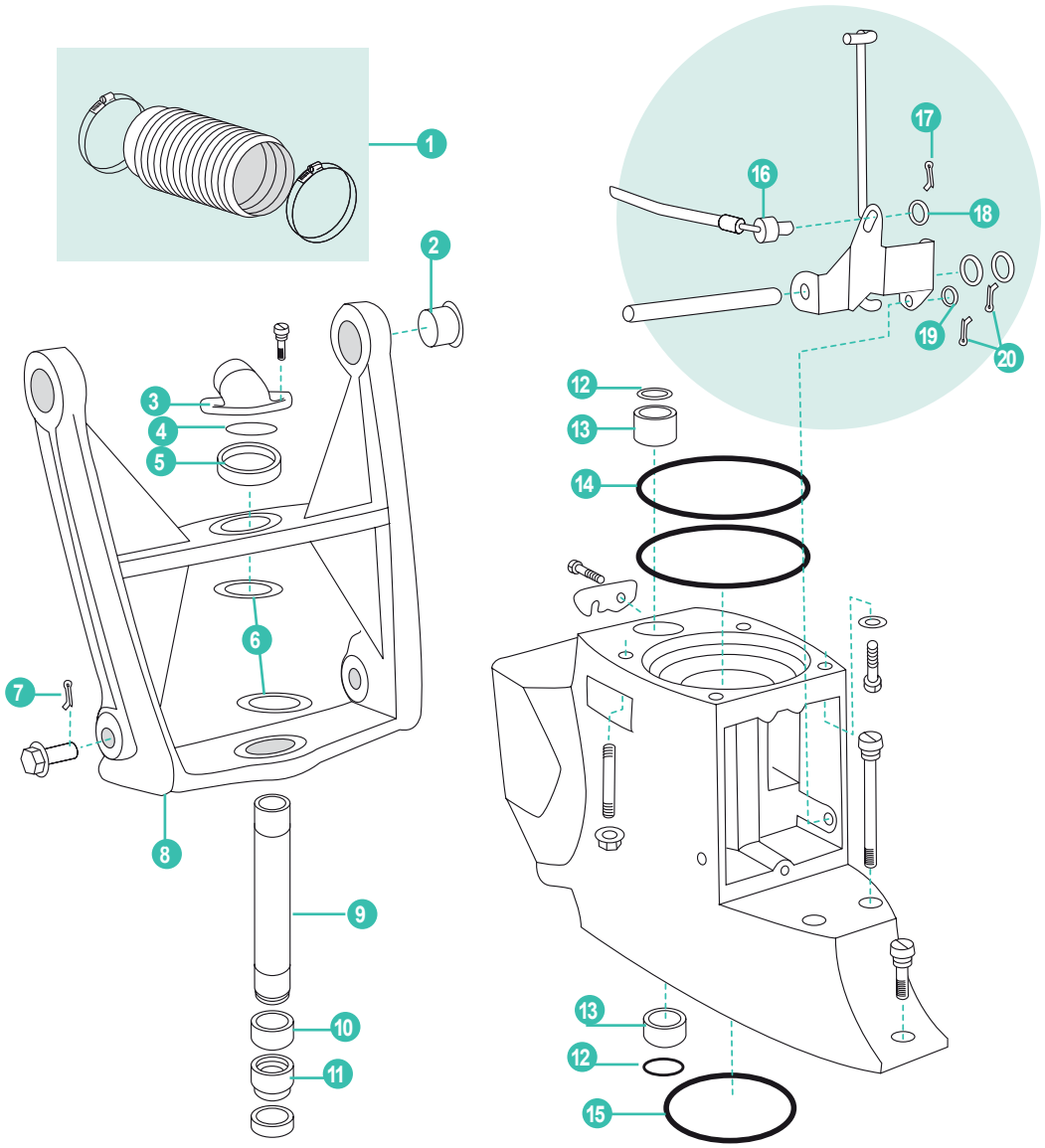

	REF	OEM				
1	REC876631	876631	KIT DE FUELLE	BELLOW KIT	KIT CUFFIA	KIT SOUFFLET D'ECHAPPEMENT
2	REC872096	872096	KIT DE CASQUILLO	BUSHING KIT	KIT BOCCOLA	KIT BAGUE
3	REC872752	872752	PIPETA TOMA DE AGUA	PIPE CONNECTION	CONESSIONE TUBO	PIPE D'EAU
4	REC979254	979254	ARO TÓRICO	O-RING	O-RING	JOINT TORIQUE
5	REC872756	872756	CASQUILLO COJINETE	BEARING BUSHING	BOCCOLA CUSCINETTO	BAGUE
6	REC3860808	3860808	ARANDELA	WASHER	RONDELLA	RONDELLE
7	REC967707	967707	PASADOR HENDIDO	PIN	PIN	GOUPILLE
8	REC3857140	3857140	HORQUILLA	SUSPENSION FORK	FORCELLA	FOURCHE
9	REC872753	872753	MANGUETA GUÍA	STEERING KNUCKLE	MANIGLIA DI GUIDA	FUSEE DE DIRECTION
10	REC872756	872756	CASQUILLO COJINETE	BEARING BUSHING	BOCCOLA CUSCINETTO	BAGUE ROULEMENT
11	REC873534	873534	SOPORTE	SUPPORT	SUPPORTO	SUPPORT
12	REC125017	125017	ARO TÓRICO	O-RING	O-RING	JOINT TORIQUE
13	REC872986	872986	MANGUITO	TUBE	TUBO	DURITE
14	REC925259	925259	ARO TÓRICO	O-RING	O-RING	JOINT TORIQUE
15	REC925256	925256	ARO TÓRICO	O-RING	O-RING	JOINT TORIQUE
16	REC22336734	22336734	CUBO	HUB	CUBO	CONNECTEUR CÂBLE DE COMMANDE
17	REC17276	17276	PASADOR HENDIDO	PIN	PIN	GOUPILLE
18	REC940191	940191	ARANDELA	WASHER	RONDELLA	RONDELLE
19	REC940191	940191	ARANDELA	WASHER	RONDELLA	RONDELLE
20	REC17253	17253	PASADOR HENDIDO	PIN	PIN	GOUPILLE FENDUE

			Zn	OEM	Al	OEM
AQUAMATIC 1 hélice Single prop drives 1 èlica 1 hélice	ENGRANAJE INFERIOR LOWER GEAR INGRANAGGIO INFERIORE CARTER INFÉRIEUR	100	CMV-15	875810		
		200 - 290 SP	CMCMV-18	875815	CMCMV-18A	
	PLACA / ALETA SPRAY PLATE PIASTRA / ALETTA PLAQUE / AILETTE	SX	REC3855411	3855411	REC3863193AL	3863193
		SX-A	REC3888814	3888814	REC23164609AL	3888813
	TRANSOM	200-280	REC832598	832598	REC832598AL	
		290, SP	REC852835	852835	REC852835AL	
		SX	REC3854130	3854130	REC3586461AL	3586461
		SX-A	REC3888817	3841427	REC23164611AL	3888816
AQUAMATIC 2 hélices Duoprop drives 2 eliche 2 hélices	ENGRANAJE INFERIOR LOWER GEAR INGRANAGGIO INFERIORE CARTER INFÉRIEUR	280, 290, DP	REC875821	875821	REC875821AL	
	PLACA / ALETA SPRAY PLATE PIASTRA / ALETTA PLAQUE / AILETTE	DPS	REC3855411	3855411	REC3863193AL	3863193
		DPS-A, DPS-B, FWD	REC3888814	3888814	REC23164609AL	3888813
		DPH	REC3588746	3588746	REC3588746AL	3588748
		DPR	REC3888814	3589875	REC23164609AL	
		DPX	CM876638	876638		
	TRANSOM	280	REC832598	832598	REC832598AL	
		290, DP	REC852835	352835	REC852835AL	
		DPS	REC3854130	3854130	REC3586461AL	3586461
		DPS-A, DPS-B, FWD	REC3888817	3888817	REC23164611AL	3888816
		DPH, DPR	REC3588745	3588745	REC3588745AL	3588770
		DPX	CM872139	872139	CM872139A	
PENTA IPS	ENGRANAJE INFERIOR LOWER GEAR INGRANAGGIO INFERIORE CARTER INFÉRIEUR		CM3593881	3593981	REC3593981AL	
	TRANSOM IPS	1			REC23172849AL	23172849
		15, 2, 3, 30			CM40005875A	23172856
S-DRIVE	ENGRANAJE INFERIOR LOWER GEAR INGRANAGGIO INFERIORE CARTER INFÉRIEUR	110S, 120S, MS25S	REC23172849	876286	REC23172849AL	
		130S, 150S (2 UN)	REC22651246	22651246	REC22651246AL	
FOLDING PROPELLER	S-DRIVE	2 PALAS / BLADES / PALE	REC3858399	3858399	REC3858399AL	
		3 PALAS / BLADES / PALE	REC3858399	3858399	REC3858399AL	
		4 PALAS / BLADES / PALE	TEN00728BIS	3584442		
	EJE SHAFT ASSE	4 PALAS / BLADES / PALE	TEN00728BIS	3584442		

ÁNODO ANODE ANODI ANODE

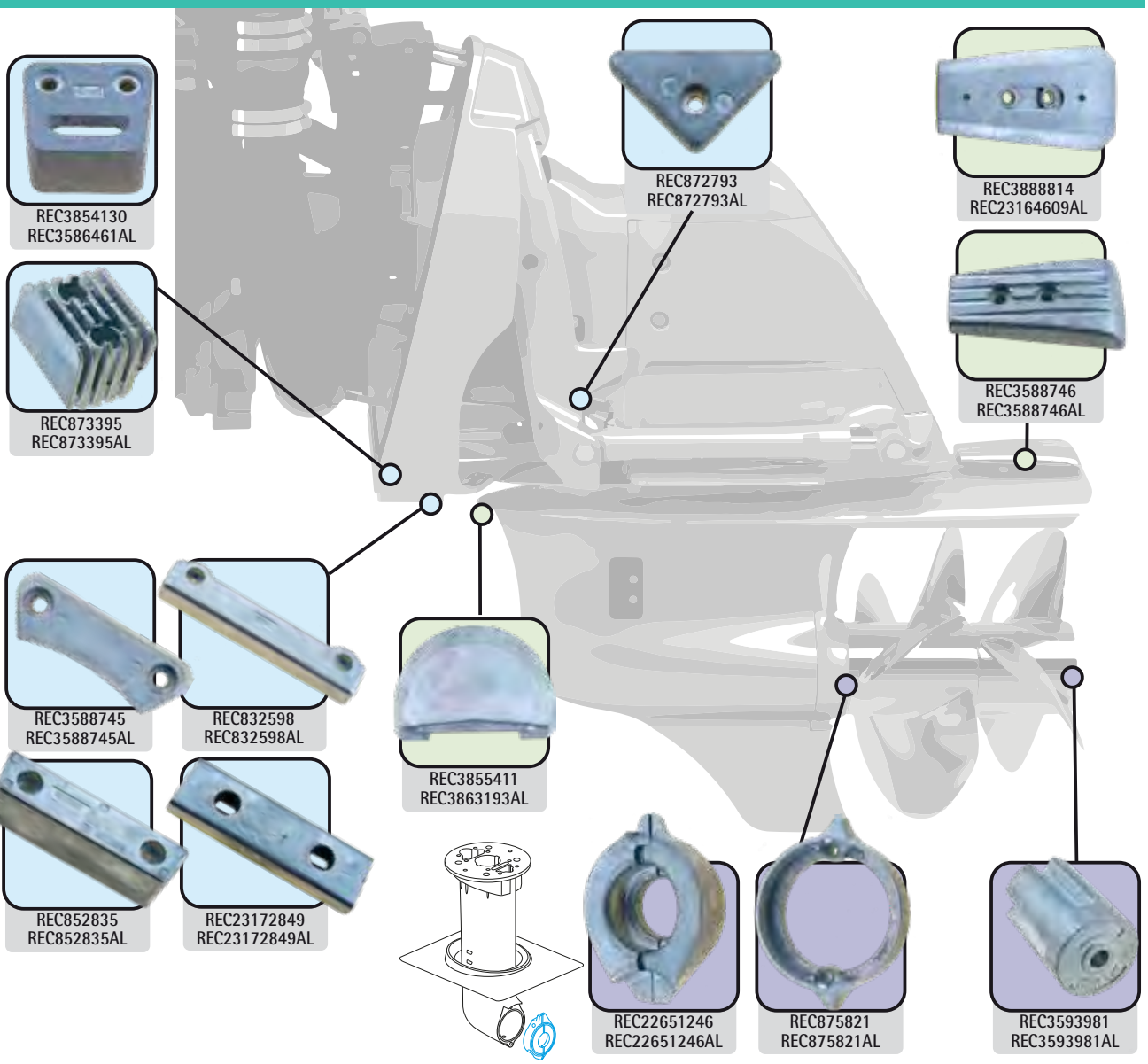

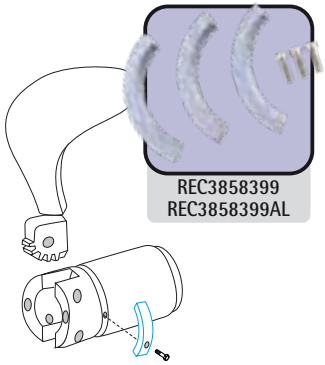

	PLACA PLATE PIASTRA PLAQUE	TRANSOM	HÉLICE PROPELLER ELICA HELICE	COLECTOR MANIFOLD COLLETTORE COLLECTEUR
280		REC832598 REC832598AL		
280 DP			REC875821 REC875821AL	
290		REC872793 REC872793AL REC852835 REC852835AL		
290 DP, DPX, DP-E, DP-C1, CP-D1			REC875821 REC875821AL	
DP-SM			REC875821 REC875821AL	
SX-M, DP-SM	REC3855411 REC3863193AL	REC3854130 REC3586461AL REC873395 REC873395AL		
SX-A, DPS-A		REC23164611AL		
DPH, SX-A, SX-D, FWD	REC3888814 REC23164609AL			
DPH, DPR	REC3588746 REC3588746AL	REC3588745 REC3588745AL		
IPS		REC23172849 REC23172849AL	REC3593981 REC3593981AL	
VELEROS | SAILBOATS | VELA | VOILIER			REC22651246 REC22651246AL	
V6 & V8				REC21403633

new

	REF	OEM	
Zn	REC21403633	21403633	V6 & V8

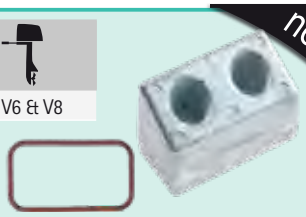

		(kg)	OEM
ZN	REC3854130		3854130
AL	REC3586461AL		3586461



		(kg)	OEM
ZN	REC873395		873395
AL	REC873395AL		

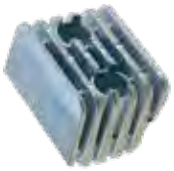

		(kg)	OEM
ZN	REC872793		872793
AL	REC872793AL		



		(kg)	OEM
ZN	REC3888814		
AL	REC23164609AL		



		(kg)	OEM
ZN	REC3588746		3888814
AL	REC3588746AL		23164609



new

	REF	OEM	
Al	REC23164611AL	23164611 3888816 3888817	SX-A DPS-A
Zn	REC3888817		



	REF	OEM	(kg)
ZN	REC3589875		0,82
AL	REC3589876AL		



	REF	OEM	(kg)	
ZN	REC876638	876638	0,22	DPX
AL	REC876638AL			



	REF	OEM	(kg)	
ZN	REC855105	855105	0,63	S. DRIVE
AL	REC855105AL			



		(kg)	OEM
ZN	REC3588745		35888745
AL	REC3588745ALL		3588770



		(kg)	OEM
ZN	REC852835		852835
AL	REC852835AL		3588770

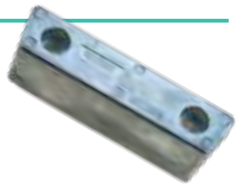

		(kg)	OEM
ZN	REC832598		832598
AL	REC832598AL		

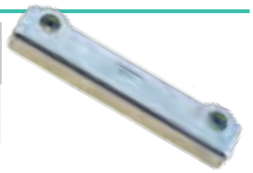

		(kg)	OEM
ZN	REC23172849		
AL	REC23172849AL		23172849

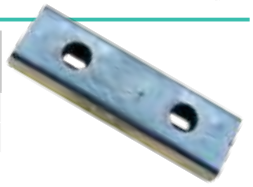

	REF	OEM	(kg)	
ZN	REC3852970	3852970	0,16	SX DRIVE
AL	REC3852970AL			



	REF	OEM	(kg)	
ZN	REC872139	872139	0,69	DPX
AL	REC872139AL			



	REF	OEM	(kg)	
ZN	REC832934	832934	0,63	TRIM 270
AL	REC832934AL			



	REF	OEM	(kg)	
ZN	REC852019	852019	0,04	SAIL DRIVE 100
AL	REC852019AL			



	REF	OEM	(kg)
ZN	REC41100276		0,05
AL	REC41100276AL		



	REF	OEM	(kg)	
ZN	REC21868042	21868040	0,45	D4/D6 Exhaust pipe DP4 / DPR / DPI
AL	REC21868042AL	21868042	0,18	



	REF	OEM	(kg)
ZN	REC41100098	41100098	0,06
AL	REC41100098AL		



	REF	OEM	(kg)	
ZN	REC3861636	3861636	0,24	XDP-B
AL	REC3861636AL			



	REF	OEM	(kg)	
ZN	REC3807400	3807400	0,43	DPH - DPR
AL	REC3807400AL			



	REF	OEM	(kg)	Ø (mm)
ZN	REC833913	833913	0,31	25-30
ZN	REC833915	833915	0,51	35-40
ZN	REC828140	828140	0,46	45
ZN	REC873413	873413	0,43	35-40



	REF	OEM	(kg)	
ZN	REC852018	852018	0,18	110, 120, S-B, S-C
AL	REC852018AL			



	REF	OEM	(kg)
ZN	REC3593981	3593981	
AL	REC3593981AL		



	REF	OEM	(kg)
ZN	REC3855411	3855411	
AL	REC3863193AL	3863193	



	REF	OEM	(kg)	
ZN	REC875815	875815	0,76	280-290
AL	REC875815AL			



new

	REF	OEM
AL	REC876286AL	



	REF	OEM	(kg)
ZN	REC22651246	22651246	
AL	REC22651246AL		



	REF	OEM	(kg)
ZN	REC875821		
AL	REC875821AL		



	REF	OEM	(kg)	
ZN	REC875812	875812	0,94	S. DRIVE 110
AL	REC875812AL			



	REF	OEM	Ø	(kg)	
ZN	REC875810	875810	100 mm	0,20	50-100 HP
AL	REC875810AL				
ZN	REC875809	875809	108 mm	0,26	
AL	REC875809AL				
ZN	REC875805	875805	114 mm	0,28	
AL	REC875805AL				



	REF	OEM	(kg)	
ZN	REC3861634	3861634	0,30	XDP-B
AL	REC3861634AL			



	REF	OEM
ZN	REC3888491	
AL	REC23974207AL	



	(kg)	OEM
ZN	REC3858399	3858399
AL	REC3858399AL	



	REF	OEM	Ø EXT	(kg)	
ZN	REC3584442	3584442	97,5 mm	0,28	SAIL DRIVE
AL	REC2394207AL				



	INTERCAMBIADOR EXCHANGER SCAMBIATORE ECHANGEUR	BLOQUE BLOCk BLOCCO MOTEUR	CULATA CYLINDER HEAD TESTATA CULASSE	INVERSOR INVERSOR INVERTITORE INVERSEUR
D13/ D12/ D16 MD/ TMD/ TAMD 60/ 70/ 100/ 102/ 122/ 162/ 163/ 165	REC823661 REC823661AL			
D4/ D5/ D6/ D7/ D8/ D9/ D11/ D12 MD, TMD, TAMD, AQAD, AQ 21/30/31/40/41 /42/60/61/63/70/71/72 /73/74/100/120/122/162/165	REC838929 REC838929AL			
2003		REC838929 REC838929AL		
2001-2002			REC838929 REC838929AL	
MS3				REC838929 REC838929AL



REC823661
REC823661AL



REC838929
REC838929AL

KITS ANODOS — ANODES KIT — KIT ANODI — KIT ANODES

	REF
Zn	RECKITVSXZN
AL	RECKITVSXAL
Mg	RECKITVSXM



	REF
Zn	RECKITVSXAZN
AL	RECKITVSXAAL
Mg	RECKITVSXAM



	REF
Zn	RECKITVDPHZN
AL	RECKITVDPHAL
Mg	RECKITVDPHM



	REF
Zn	RECKITV280ZN
AL	RECKITV280AL
Mg	RECKITV280M



	REF
Zn	RECKITV290ZN
AL	RECKITV290AL
Mg	RECKITV290M



	REF
Zn	RECKITV290DPZN
AL	RECKITV290DPAL
Mg	RECKITV290DPM



	REF
Zn	RECKITV280DPAL
AL	RECKITV280DPAL
Mg	RECKITV280DPM



ÁNODO ANODE ANODI ANODE

VOLVO

REF	OEM	(kg)	
ZN TEN00717	872793	0,11	DUO PRO 290



REF	OEM	(kg)	
ZN TEN00708	852835	0,75	DUO PRO 290



REF	OEM	(kg)
ZN TEN00732	4100276	0,09



REF	OEM	(kg)	
ZN TEN00733	3588746 3588748 3588750	0,85	DPH DPR
ZN TEN00733BIS	3888814	1,27	SXA DPS-A



REF	OEM	Ø EXT	(kg)	
ZN TEN00728	3858399	83 MM	0,30	SAIL DRIVE



REF	OEM	(kg)	
ZN TEN00737	3888817	1,15	SXA APS-A



REF	OEM	(kg)	
ZN TEN00738	3599981	0,74	IPS



REF	OEM	(kg)	
ZN TEN00707	832598	0,93	250, 270, 275, 280, 285



REF	OEM	(kg)	
ZN TEN00718	3854130	1,05	S. DRIVE - SX DRIVE



REF	OEM	(kg)	
ZN TEN00722 AL TEN00722AL	873395	0,37	DPX



REF	OEM	(kg)	
ZN TEN00739AL	40005875	1,60	IPS



REF	OEM	(kg)	
ZN TEN00735	3888814	0,52	DUO PROP



REF	OEM	(kg)	l (mm)	l1 (mm)	Ø (mm)	Ø3
ZN TEN00715	838929	0,02	13	10	16	5/16"





REF	OEM	(kg)	Ø (mm)
AI TEN00719	833913	0,31	25-30
ZN TEN00719-1		0,31	
AI TEN00720	833915	0,28	35-40
ZN TEN00720-1		0,51	
AI TEN00721	828140	0,49	45
ZN TEN00721-1		0,46	
ZN TENWE724	873413	0,43	35-40



	REF	OEM	(kg)	
ZN	TEN00706	876286 851983	0,53	S. DRIVE 120



	REF	OEM	(kg)	
ZN	TEN00704BIS	875821	0,47	DUO PRO 290 (2002+)



	REF	OEM	(kg)	
ZN	TEN00726	3855411	0,94	SX DRIVE
AL	TEN00726AL			



	REF	OEM	(kg)	
ZN	TEN00734	3888305 3888306	1,46	SAIL DRIVE SD 130 - 150 (2002-03)



KITS DE ÁNODOS — ANODES KIT — KIT ANODI — KIT ANODES

KIT	ÁNODO ZN ZN ANODE ANODO ZN ANODE ZN	OEM	TAPÓN PLUG TAPPO BOUCHON	(kg)	L (mm)	A (mm)	B (mm)	C (mm)	D (mm)	M BSPT	M2	M2 UNIC
TEN00714T				0,08	85	13	30	15	10	1/2"	M8	7/16"
	TEN00714	838929		0,04			30				M8	
	TEN00714-1			0,02			30				M8	
			TEN00714TPM	0,06		13		15		1/2"	M8	
			TEN00714TPF	0,06		13				1/2"		7/16"


TEN00714T


TEN00714 TEN00714TPM


TEN00714-1 TEN00714TPF

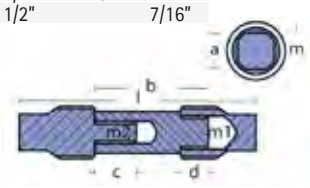

KIT	ZN	OEM		(kg)	L (mm)	A (mm)	B (mm)	C (mm)	Ø BSPT	Ø	Ø2 UNIC	
TEN00713T				0,10	67	13	10	40	1/2"	15	7/16"	200
	TEN00713	832989		0,06				40		15	7/16"	250
			TEN00713TP	0,40		13	10		1/2"			270


TEN00713T


TEN00713 TEN00713TP

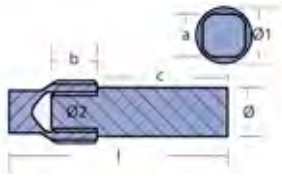

KIT	ZN	OEM		(kg)	A (mm)	Ø1 (mm)	L (mm)	B (mm)	Ø	Ø2	Ø4 UNIC
TEN00716T				0,16			10	44	16	25	3/8"
	TEN00716	823661		0,26			61	19	44	25	3/8"
			TEN00716TP	0,10	19	40					





new

	KIT	OEM	(kg)	A	c	l	Ø
ZN	TEN02029T	3858995	0,07	3/8"	19	38	12,5



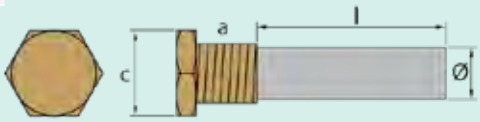

REF		
ZN	TENKITVOLVO280	280



REF		
ZN	TENKITVOLVO290	290



REF		
ZN	TENKITVOLVO290-C	290



REF		
ZN	TENKITVOLVOELICA3PAL	ELICA 3 PALE



REF		
Zn	TENKITVOLVODP280	DUO PRO 280



REF		
ZN	TENKITVOLVOIPS	IPS



REF		
Zn	TENKITVOLVODP290	DUO PRO 290



REF		
ZN	TENKITVOLVOSX	SX



REF		
ZN	TENKITVOLVODP290-C	DUO PRO 290-C



REF		
ZN	TENKITVOLVOSXA/DPASA	SXA / DPSA



REF		
ZN	TENKITVOLVODPH/DPR	DPH/DPR



REF		
ZN	TENKITVOLVOXDP-B	XDP-B



	REF	OEM	KG (kg)	
ZN	CM875812	875812	0,92	110S
Al	CM875812A		0,41	



	REF	OEM	KG (kg)	
ZN	CM851983	876286	0,49	110S, 120S, SB, M525S
Al	CM851983A		0,24	



	REF	OEM	KG (kg)	
ZN	CM3888305	3888305	1,48	130S, 150S
Al	CM3888305A		0,20	



new

	REF	OEM	KG (kg)	
ZN	CM22651246	22651246 23615636	1,48	Sail Drive New version



	REF	OEM	KG (kg)	
ZN	CMV-16	875809	0,20	50, 200



	REF	OEM	KG (kg)	
ZN	CMV-15	875810	0,20	50, 100



	REF	OEM	KG (kg)	
ZN	CMV-17	875805	0,29	AQ250, 270, 270T, 275, 275A SP-A/MT, A1, A2 SPC
Al	CMV-17A		0,13	



	REF	OEM	KG (kg)	
ZN	CMCMV-18	875815	0,73	AQ280, L, T, PT AQ285A, 290, 290A SP-A
Al	CMCMV-18A		0,29	



	REF	OEM	KG (kg)	
ZN	CM875821	875821	0,92	DUOPROP, DP-A, A1, A2, B1, C, D AQ280DP, 290DP
Al	CM875821A		0,41	



	REF	OEM	KG (kg)	
ZN	CM832598	832598	0,95	AQ250, 270, 275, 280, 280DP, 280DPT SP-A/MT
Al	CM832598A		0,37	



	REF	OEM	KG (kg)	
ZN	CM852835	852835	0,76	SP, DP
Al	CM852835A		0,30	



	REF	OEM	KG (kg)		A (mm)	B (mm)	C (mm)	D (mm)
ZN	CM3588745	3588745	0,49	DPH, DPR	120	24	86	40
Al	CM3588745A		0,20					



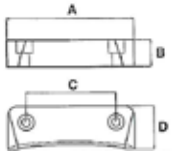

	REF	OEM	(kg)	
ZN	CM872139	872139	0,65	DPX
Al	CM872139A		0,29	



	REF	OEM	(kg)	
ZN	CM3841427	3888817	0,43	SX-A, DPS-A, B FWD
Al	CM3841427A	3888816	0,20	



	REF	OEM	(kg)	
ZN	CM3883728	3888813	1,08	SX-A, DPS-A, B FWD
Al	CM3883728A		0,20	



	REF	OEM	(kg)	A (mm)	B (mm)	C (mm)	D (mm)	E (mm)	
ZN		3588746	0,71	78	130	49	8,5	35	DPH
Al			0,35						



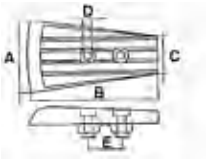

	REF	OEM	(kg)	
ZN	CM3854130	3854130	1,09	SX, SXA, DPS
Al	CM3854130A		0,41	



	REF	OEM	(kg)	
ZN	CM876638	876638	0,04	DPX

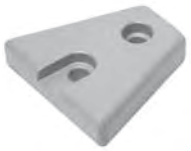

	REF	OEM	(kg)	
ZN	CM873395	873395	0,28	SX-MHP
Al	CM873395A		0,13	



	REF	OEM	(kg)	
ZN	CM3855411	3855411	1,04	SX, DPS
Al	CM3855411A		0,41	



	REF	OEM	(kg)	
ZN	CM872793	872793	0,11	SP, DP
Al	CM872793A		0,05	



	REF	OEM	(kg)	
ZN	CM855105	855105	0,16	50S



	REF	OEM	(kg)	
ZN	CM3852970	3852970	0,15	SX-C
Al	CM3852970A		0,07	



	REF	OEM	(kg)	
ZN	CM3861634	3861634	0,29	XDP
AL	CM3861634A		0,13	



	REF	OEM	(kg)	
ZN	CM3861636	3861636	0,24	XDP
Al	CM3861636A		0,10	



	REF	OEM	(kg)	
ZN	CM852018	852018	0,05	
Al	CM852018A		0,03	



	REF	OEM	(kg)	
ZN	CM852019	8520219	1,09	



	REF	OEM	(kg)	
ZN	CM832934	832934	0,66	270



	REF	OEM	(kg)	
ZN	CM3593881	3593981	0,69	IPS
AL	CM3593881A		0,29	



	REF	OEM	(kg)	
ZN	CM41100276	41100276	0,09	27 x 52 mm



	REF	OEM	(kg)	A (mm)	B (mm)	H (mm)	D (mm)	Ø (mm)
ZN	CM41100276P	41100276	0,04	37	22	15	10	65



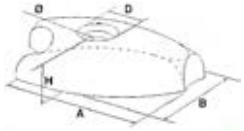

	REF	OEM	(kg)	
ZN	CM823661	823661	0,14	XDP
AI	CM823661A		0,07	



	REF	OEM	(kg)	
ZN	CM838929	838929	0,05	XDP
AI	CM838929A		0,02	



	REF	OEM	(kg)
ZN	CM41100098	41100098	0,06



	REF	OEM	(kg)	rosca
ZN	TEN00719-1	873411	0,30	22 - 25 mm
ZN	CM873412	873412	0,28	30 mm
ZN	CM828140	873413	0,54	40 - 45 mm



	REF	OEM	(kg)	
ZN	CM40005875	40005875	3,61	IPS
AL	CM40005875A		1,51	



new

	REF	OEM	(kg)	
ZN	CM40005206	40005206		Active corrosion EVC
AL	CM40005206A			



new

	REF	OEM	(kg)	
ZN	CM21718129	21868042		D4/D6 Exhasut pipe
AL	CM21718129A	21718129		DPH/DPR/DPI



KITS DE ÁNODOS — ANODES KIT — KIT ANODI — KIT ANODES

	REF	OEM
ZN	CM3858399	3858399
AL	CM3858399A	



	REF
MG	CM290DPKITM
AL	CM290DPKITA

290 DP



REF		
MG	CM280KITM	280 SP
AL	CM280KITA	



REF		
MG	CMSXKITM	SX
AL	CMSXKITA	



REF		
MG	CM290KITM	290 SP
AL	CM290KITA	



REF		
MG	CMSXAKITM	SX-A
AL	CMSXAKITA	



REF		
MG	CM280DPKITM	280 DP
AL	CM280DPKITA	



REF		
MG	CMDPHKITM	DPH
AL	CMDPHKITA	

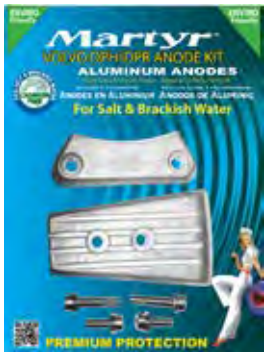

KITS REPARACIÓN · REPAIR KITS · KIT RIPARAZIONE · KIT DE RÉPARATION

AQUAMATIC

ARO TOMA AGUA · SWIVEL BUSHING FOR PIPE · BOCCOLA · BAGUE

REF	OEM	
REC814388	814388	250, 270, 280



CASQUILLOS HORQUILLA · PLASTIC BUSHINGS · BOCCOLA FORCELLA · BAGUES DE CASQUE

REF	OEM	
REC876278	826341	Tilt eléctrico Electric Tilt Tilt elettrico Tilt électrique



REF	OEM	
REC876279	876279 853223	Power Trim AQ290, SP, DP



REF	OEM	
REC832820	832820	Power Trim AQ270T, 280T



REF	OEM	
REC872096	876507 872096	Power Trim DPE DPX, -S1 DP-C1, D1

PIPETA TOMA AGUA — HOSE CONNECTOR — PIPETTA — PIPE D'EAU

REF	OEM		
REC854031	854031	280	REC814356



REF	OEM		
REC832846	832846	AQ200-290 AQSP, DP	REC814356



REF	OEM			
REC872752	872752	DP, D, E, G, H, X	Plástico | plastic in plastica | plastique	REC979254



REF	OEM		
REC40005192	40005192	DPH-A, B, C DPR-A, B, C	REC990899



JUNTA GOMA — RUBBER GASKET — GUARNIZIONE IN GOMMA — JOINT CAOUTCHOUC

REF	OEM
REC814356	814356



REF	OEM
REC990899	990899



REF	OEM
REC979254	979254



ARANDELA DE PLÁSTICO — PLASTIC WASHER — RONDELLA IN PLASTICA — RONDELLE EN PLASTIQUE

REF	OEM
REC814390	814390

REF	OEM	
REC850888	850888	AQ200, 250, 270, 275, 280, 285, 290 SP-A, A, MT, A1, A2, C, C1



PASADOR — SETTING PIN — CHIAVISTELLO — ARBRE

REF	OEM
REC814301	814301



REF	OEM	
REC814419	814419	AQ290, A DP, A, A1, A2, B1 SP-A, A1, A2



MUELLES — SPRINGS — MOLLE — RESSORTS

REF	OEM	
REC23170		KIT
REC832534	832534	
REC814396	814396	
REC814332	814332	


REC23170


REC832534

REC814396


REC814332

ARANDELA SEGURO TUERCA — PROP LOCK TAB WASHER — RONDELLA DI SICUREZZA — RONDELLE FREIN

REF	OEM	
REC897367	897367	AQ200, 250, 270, 275, 280, 285, 290 SP-A, A, MT, A1, A2, C, C1



CORTALÍNEAS — THRUST RING — REGGISPINTA — COUPE FILS

REF	OEM	
REC839423	839423	280-290 SP, 285
REC872082	872082	SP-E, A2
REC839534	839534	250, 270, 275


REC839423


REC872082


REC839534

TORNILLO — SCREW — VITE — VIS

REF	OEM	
REC850889	850889	289/290 SP



GRUESO TRASERO HÉLICE DP — THRUST WASHER DP — SPESSORE POSTERIORE ELICA DP — ENTRETOISE ARRIÈRE DP

REF	OEM	
REC3858457	3858457 3856070 872891 852206	DP-E, G, C1, D1
REC3858458	3858458 3857307 3856069 872872	


REC3858457


REC3858458

KIT REPARACION HELICE — PROPELLER SERVICE KIT — KIT RIPARAZIONE ELICA — KIT CONE HELICE

REF	REF	OEM
REC23120	REC854045	854045
	REC854047	854047
	REC897367	897367
	REC850888	850888
	REC850889	850889


REC854047


REC850888



REC897367


REC854045

REF	OEM	
RM872614	872614 854057 854666 853655	DP 16mm
RM872549	872549	DP 20 mm


RM872614


RM872549

SX

TOPE HÉLICE | SPLINE WASHER | SPESSORE ELICA | ENTRETOISE

REF	OEM
REC3852350	3852350



CIERRE HÉLICE | THICK THRUST WASHER | CHIUSSURA ELICA | RONDELLE D'HELICE

REF	OEM
REC126870	3852020



PASADOR | COTTER PIN | COPPIGLIA | GOUPILLE FENDUE

REF	OEM
REC3852056	3852056



KIT REPARACION HELICE | PROPELLER SERVICE KIT | KIT RIPARAZIONE ELICA | KIT CONE HELICE

REF	OEM	ROSCA
REC398042	3850984	3/4x16
REC22188	3850984	
REC22189	3850984	



REC398042



REC22189



REC22188

KITS REPARACIÓN COLAS E INVERSORES | GASKET SET STERN DRIVES & INVERTERS | KITS RIPARAZIONE PIEDI E INVERTITORI | KITS RÉPARATION EMBASES ET INVERSEURS

KITS COMPLETOS | FULL KIT | KIT COMPLETO | KIT COMPLET

REF	OEM	
REC19035		AQ Drives. DP-C1, D1, E DPX-S, S1

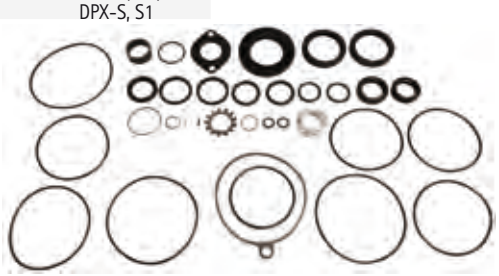

REF	OEM	
REC876391	876391 875720	120C, D, S, B S120C



REF	OEM	
REC875741	876266+876267 875741	AQ 250, 270, 275, 280, 285, 290 (Con carcasa inferior DP with DP lower housing con carcassa inferiore DP avec carter inférieur DP) DP-A, A1, B, C, D



REF	OEM	
REC19037	876266+876268	DP AQ 200, 250, 270, 275, 280, 285, 290 SP-A, MT, A1, A2, C



REF	OEM	
REC23009		DPH-A, B, C DPR-A, B, C



REF	OEM	
REC23027		DPH-D DPR-D



REF	OEM	
REC3859050	3859050	XDP-B X-B, BLT XHP-BLT XXP-A, ALT, D3



new

REF	OEM	
REC877362	21389074	

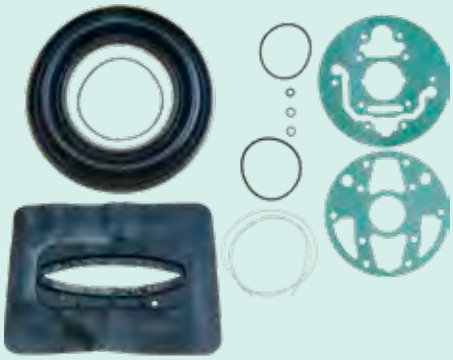

new

REF	OEM		OEM	
REC21112497	21112497	SAIL 130/150	3586693	GASKET
			976994	O-RING
			925256	O-RING
			944364	O-RING
REC21112496	21112496	SAIL 120	3856834	GASKET
			852668	WIRE LOCKING
			925256	O-RING

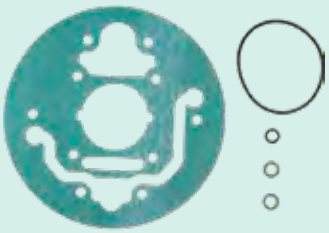

REC21112497



REC21112496

REF	OEM	
REC876267		DP-C1, D1, E DPX-S, S1



REF	OEM	
REC22086		⃠ DP AQ 250, 270, 275, 280, 285, 290 SP-A, MT, A1, A2, C, C1

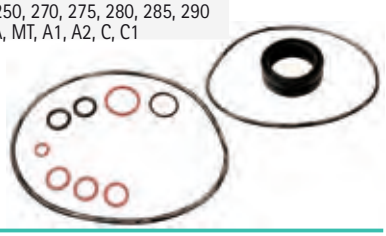

REF	OEM	
REC22087		DP-A, A1, A2, B, B1, C, C1, D, D1 DPX-S, S1 Eje hélice | Drives shaft | Asse elica | Arbre d'hélice



REF	OEM	
REC876268	876268	AQ 200, 250, 270, 275, 280, 285, 290, SP-A, A/MT, A1, A2, C



REF	OEM	
REC876267	876267	AQ280DP, 290DP DP-A, A1, A2, B1, C, D



REF	OEM	
REC23018		DPH-A, B, C DDPR-A DPR-B, C



new

REF	OEM	
REC23553896	23553896	DPH/DPR (D-E) DPI-A

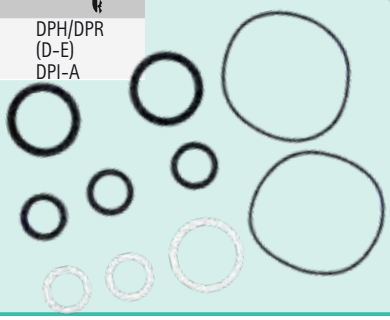

REF	OEM	
REC23033		130S-A, S-B, R-A, R-B 150S-A, S-B, R-A, R-B



REF	OEM		OEM	
REC22151		200, 250, 270, 275, 280, 290 SP-A, C	REC125017	125017
			REC839253	853670
			REC925256	925256
			REC925259	925259
			REC955974	955974
			REC956000	956000



new

REF	OEM	
REC3812357	3812357	IPS-A, B, C, D, E, F



KIT INFERIOR- EJE HÉLICE — LOWER KIT - SHAFT PROPELLER — KIT INFERIORE - ASSE ELICHA — KIT INFÉRIEUR - ARBRE D'HÉLICE

REF	
REC22085	120C-D, S, S-B S120C



REF	
REC23008	120S-E MS25S-A, R-A



KIT INFERIOR DP — LOWER KIT DP — KIT INFERIORE DP — KIT INFÉRIEUR DP

REF	OEM	
REC3856002	3856002	DP-CS, S1, SM



REF	OEM	
REC23020	3888822	DPS-A, B



REF	OEM	
REC3855275	3855275	SX-C, C1, C2, CT, CTI, R, RTI, M, MI, MTD



REF	OEM	
REC23025		XDP-B, X-B, X-BTL, XHP, BLT, XXP-A, XXP-ALT, XXP-D3

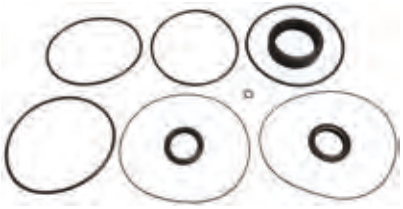

REF	OEM	
REC23022	3888821	SX-A



REF	OEM	
REC22612828	22612828	FWD



KIT SUPERIOR — UPPER KIT — KIT SUPERIORE — KIT SUPÉRIEUR

REF	OEM	
REC876266	876266	DP-CS, SAQ 250, 270, 275, 280, 285, 290 SP-A, A/MT, A1, A2, C, DP-A, A1, A2, B1, C, D



REF	OEM	
REC22151		AQ270, 270T, 275, 275A, 280, 280DP, 280T, 285A, 290, 290A, 290DP SP-A, A/MT, A1, A2, C, C1 DP-A, A1, A2, B, B1, C, C1, D, D1, E DPX, S



REF	
REC19029	DPX-, S, S1 SP-C1 DP-C1, D1, E, S1



REF	OEM	
REC3888917	3888917 876392	SX-A DPS-A, B, B1 FWD

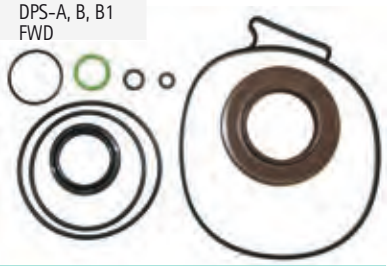

REF	OEM	
REC3850594	3850594	SX-C, C1, C2, CT, CT1, R, RT1, RT2, M, MTD, M1 DPS, SM



REF	
REC23010	DPH-A, B, C, D, D1 DDPR-A DPRB, C, D



REF	
REC22097	120C-D, S, S-B S120C



REF	
REC23019	DPH-A, B, C, D DDPR-A DPRB, C, D



REF	
REC23024	XDP-B X-B, BLT XHP-BLT XXP-A, ALT, D3



REF	
REC23034	DP-G DPX-A



KIT INVERSORES — INVERTERS KIT — KIT INVERTITORI — KIT INVERSEURS

REF	OEM	
REC876588	876588	HS1



REF	OEM	
REC876073	876073	MS4



KIT TUERCA EJE AQUAMATIC — SHAFT NUT KIT AQUAMATIC — KIT DADO ASSE AQUAMATIC — KIT ÉCROU D'ARBRE AQUAMATIC

REF	OEM
REC906633	906633



GOMA PASACASCOS | THRU HULL BELLOW | GOMMA PASSASCAFO | KIT SOUFFLET SAIL DRIVE

REF	OEM	
REC22303438	854932	110, 120, 120S, 130, 150
CEF501001	22303438	MS25



RETENES Y AROS TÓRICOS | SEALS & RUBBER O-RINGS | PARAOLI E FASCIE TONDE | JOINTS SPI ET JOINTS TORIQUES

RETENES PEQUEÑOS EJE DE HÉLICE | DRIVES SEALING LITTLE RING | PARAOLIO PICCOLO ASSE ELICA | JOINTS SPI PETIT ARBRE D'HÉLICE

REF	OEM	
REC853808	853808 853871	AQ 280DP, 290DP DP-A, A2, B1, C, D XDP DPS-A, B FWD



RETENES GRANDES EJE DE HÉLICE | DRIVES SEALING BIG RING | PARAOLIO GRANDE ASSE ELICA | JOINT SPI GRAND ARBRE D'HÉLICE

REF	OEM	
REC851407	851407	AQ 280DP, 290DP DP-A, A2, B1, C, D XDP



RETÉN EJE DE HÉLICE | DRIVES SEALING RING | PARAOLIO ASSE ELICA | JOINTS SPI ARBRE D'HÉLICE

REF	OEM	
REC3593663	3593663	130S-A, S-B, R-A, SR-B 150S-A, S-B, SR-A, SR-B 120S-E, S-D MSZ25S-A, SR-A



REF	OEM		
REC3863083	3863083	EXT | OUT	DPH
REC3863080	3863080+3863081	INT | IN	



REC3863080



REC3863083

REF	OEM	
REC897426	897426	AQ200, 250, 270, 270T, 275, 275A, 280T, 280L, 285A, 290A SP-A, A/MT, A1, A2, C



REF	OEM	
REC853868	853868	SP DP



REF	OEM	
REC3863090	3863090 3858303	SX



RETÉN EJE TIPO JACKS | DRIVES SEALING RING TYPE JACKS | PARAOLIO ASSE ELICA TIPO JACKS | JOINTS SPI ARBRE D'HÉLICE TYPE JACKS

REF	OEM		
REC858464	858464	AD31D-A, L-A, P-A AD41B, D, L-A, P-A, AQAD41A D41D, L-A TAMD31, A, B TAMD41A, B, D TMD41D KAD32P, 42B, 43P-A, 44P	D4-180I-B, I-C, I-D, I-E, I-F D4-210A-A, I-A, I-B, A-B D4-225I-B, A-C, A-D, I-C, I-D, A-E, I-E D4-260A-A, A-B, A-C, A-D, D-B, D-C, D-D, I-A, I-B, I-C, I-D, A-E, D-E, I-E D4-300A-A, A-C, A-D, D-A, D-C, I-A, I-C, I-D, A-E, D-E, D-D, I-E D6-280A-A, A-B, A-C, A-D, A-E, I-A, I-B, I-C, I-D, I-E D6-310I-A, A-A, A-B, A-C, A-D, D-B, D-C, D-D, I-B, I-C, I-D, A-E, D-E, I-E, D-A D6-330A-B, A-C, A-D, D-B, D-C, D-D, I-B, I-C, I-D, A-E, D-E, I-E D6-350A-A, A-B D6-370A-B, A-C, A-D, D-B, D-C, D-D, I-A, I-B, I-C, I-D, A-E, D-E, I-E, D-A D6-400A-E D6-435D-A, D-D, D-C, D-E, I-A, I-C, I-D, I-E



VOLVO

RECAMBIOS MARINOS

TRANSOM DP-S

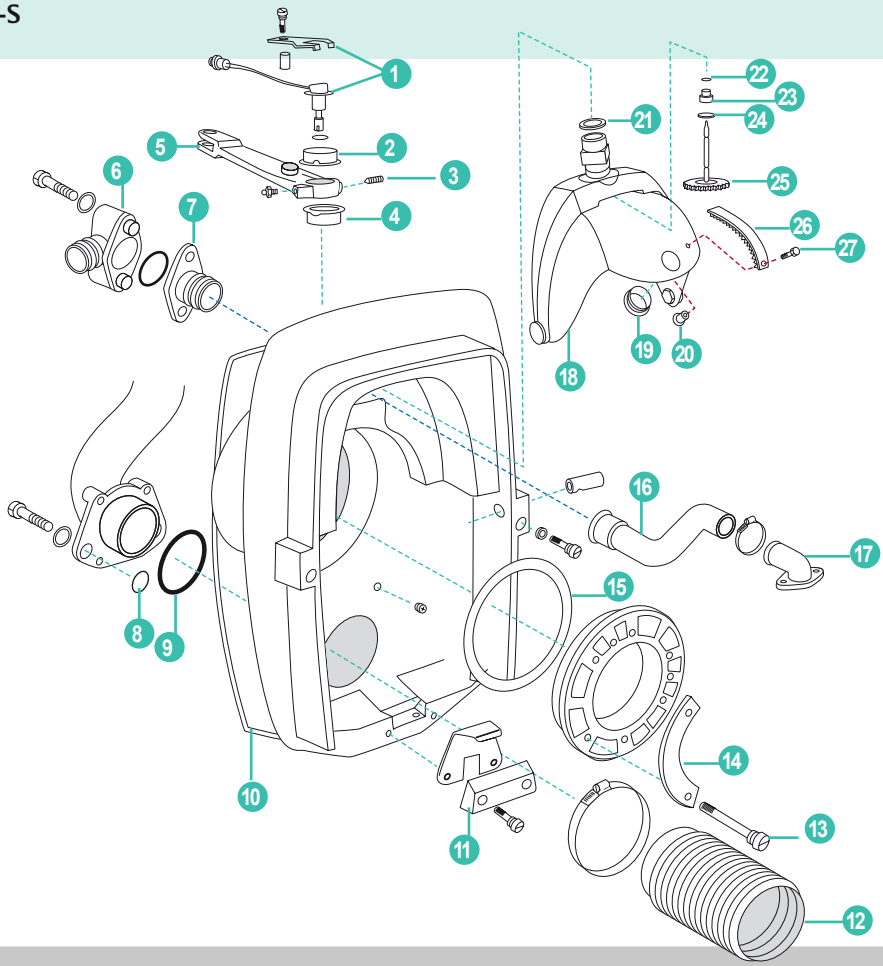

	REF	OEM				
1	REC22314183	22314183	KIT SENSOR TRIM	TRIM SENSOR KIT	KIT SENSORE TRIM	KIT SONDE DE TRIM
2	RM854705	854705	CASQUILLO	BUSHING	BOCCOLA	BAGUE
3	REC947904	947904	TORNILLO TOPE	LOCK SCREW FOR STEERING FORK	VITE TRANSOM	BOULON PLATINE
4	RM854704	854704	CASQUILLO	BUSHING	BOCCOLA	BAGUE
5	REC872722	872722	BRAZO DIRECCIÓN	STEERING ARM	BRACCETTO DIREZIONE	BRAS DE DIRECTION
6	REC872338	872338	CONEXIÓN MANGUERA	HOSE NIPPLE	CONNESSIONE TUBO	RACCORD POUR DURITE
7	REC872334	872334	TOMA DE AGUA	NIPLE	TUBO ACQUAL	RACORD
8	REC925064	925064	ARO TÓRICO	O-RING	O-RING	JOINT TORIQUE
9	REC925256	925256	ARO TÓRICO	O-RING	O-RING	JOINT TORIQUE
10	REC852868	852868	GOMA TRANSOM	TRANSON SEAL	GOMMA	JOINT DE PLATINE
11	REC852835	852835	ÁNODO ZN	ZN ANODE	ANODO ZN	ANODE ZN
12	REC876631	876631	FUELLE	BELLOW	CUFFIA	SOUFFLET D'ECHAPPEMENT
	RM876631	876631	FUELLE	BELLOW	CUFFIA	SOUFFLET D'ECHAPPEMENT
	CEF500505K	876631	FUELLE	BELLOW	CUFFIA	SOUFFLET D'ECHAPPEMENT
13	REC191844	191844	TORNILLO	SCREW	VITE	VIS
14	REC806624	806624	PLACA DE BLOQUEO	STRIKER PLATE	PIASTRA	PLAQUE DE BLOCAGE
15	REC813967	813967	ARO GOMA (Amarilla. Diesel)	RUBBER RING (Yellow. Diesel)	O-RING GOMMA (Giallo. Diesel)	JOINT TORIQUE (Jaune. Diesel)
	REC804190	813967	ARO GOMA (Verde. Gasolina)	RUBBER RING (Green. Fuel)	O-RING GOMMA (Verde. Benzina)	JOINT TORIQUE (Vert. Essence)
16	RM876632	876632	MANGUITO DE AGUA	WATER HOSE	MANICOTTO ACQUA	DURITE
17	REC872752	872752	PIPETA TOMA DE AGUA	HOSE CONNECTOR PLASTIC	PIPETTA PRESA D'ACQUA	RACCORD
18	REC872845	872845	HORQUILLA DE MANDO	STEERING YOKE	FORCELLA COMANDO	FOURCHE ET CASQUE
19	REC853048	853048	CASQUILLO	BUSHING	BOCCOLA	BAGUE
20	REC853760	853760	CASQUILLO TORNILLO CREMALLERA	RIVET NUT	GHIERA VITE CERNIERA	DOUILLE DE BOULON DE CRÉMAILLÈRE
21	RM977313	977313	RETÉN	SEAL RING	O-RING TENUTA	BAGUE D'ETANCHEITE
22	REC925050	925050	ARO TÓRICO	O-RING	O-RING	JOINT TORIQUE
23	REC851430	851430	CASQUILLO	BUSHING	BOCCOLA	BAGUE
24	REC966207	966207	RETÉN	SEAL RING	O-RING TENUTA	BAGUE D'ETANCHEITE
25	RM852984-4	852984	PIÑÓN	PINION	PIGNONE	PIGNON
26	REC872812	872812	SEGMENTO DENTADO	GEAR SEGMENT	CERNIERA TRIM	REGLETTE DE TRIM
27	REC853759	853759	TORNILLO	SCREW	VITE	VIS

TRANSOM SX

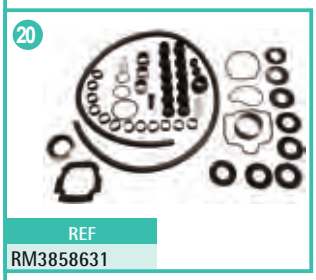

REF
RM3858631



REF
REC39631

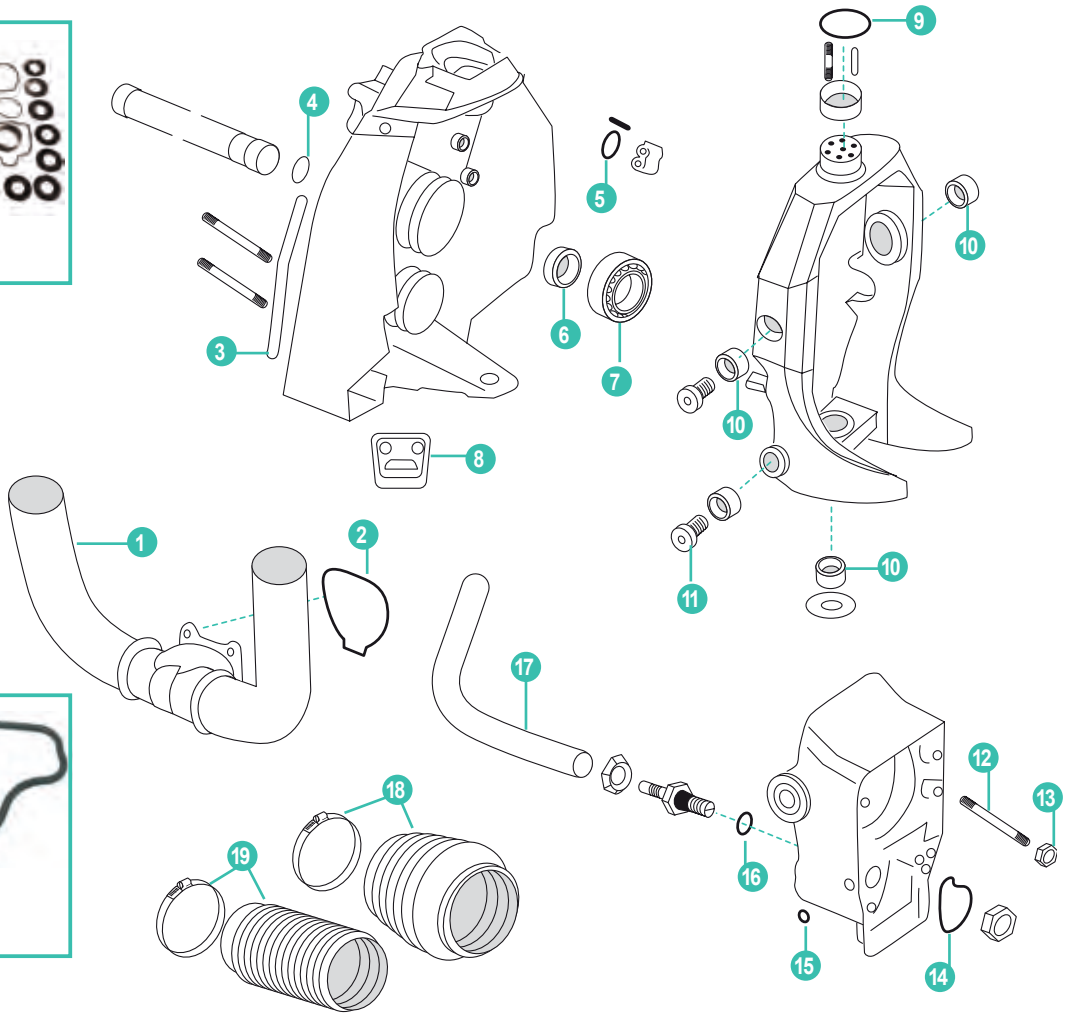

	REF	OEM				
1	RM3858873	3858873	CUERNOS ESCAPE COLA (4.3, 5.0, 5.7, 8.1)	EXHAUST MANIFOLD ASSEMBLY (4.3, 5.0, 5.7, 8.1)	CORNA DI SCARICO (4.3, 5.0, 5.7, 8.1)	CORNE D'ÉCHAPPEMENT (4.3, 5.0, 5.7, 8.1)
2	RM3587651	3587651	JUNTA CUERNO ESCAPE	SEALING KIT	GUARNIZIONE CORNA DI SCARICO	JOINT CORNE D'ÉCHAPPEMENT
3	REC3852550	3852550	JUNTA TRANSOM	SEALING TRANSOM	GUARNIZIONE TRANSOM	JOINT TRANSOM
4	REC309731	3852537	ARO TÓRICO	O-RING	FASCIA TONDA	JOINT TORIQUE
5	REC331188	3852169	ARO TÓRICO	O-RING	FASCIA TONDA	JOINT TORIQUE
6	REC3852548	3852548	RETEN TRASERO SX	SEALING, DRIVE SHAFT SX	PARAOLIO POSTERIORE SX	JOINT SPI ARRIÈRE SX
	RM3883257	3883257	RETEN TRASERO SX-A	SEALING, DRIVE SHAFT SX-A	PARAOLIO POSTERIORE SX-A	JOINT SPI ARRIÈRE SX-A
7	REC30-879194A01	21752712	COJINETE SX	BEARING TRANSOM SX	CUSCINETTO SX	ROULEMENT SX
	REC3888555	3888555	COJINETE SX-A	BEARING TRANSOM SX-A	CUSCINETTO SX-A	ROULEMENT SX-A
8	REC3854130	3854130	ÁNODO ZN	ANODE ZN	ANODO ZN	ANODE ZN
	REC3586461AL	3854130	ÁNODO AL	ANODE AL	ANODO AL	ANODE AL
9	REC25-33145	3852044	ARO TÓRICO	O-RING	FASCIA TONDA	JOINT TORIQUE
10	REC3808228	3808228	CASQUILLO	PIVOT PIN BEARING	BOCCOLA	BAGUE
11	REC3853423	3853423	CASQUILLO	BUSHING	BOCCOLA	BAGUE
12	REC3852551	3852551	ESPÁRRAGO	STUD	PERNO	GOUJON
13	REC11-859135	3852648	TUERCA	NUT	DADO	ÉCROU
14	REC3852560	3852560	RETEN GOMA	SEALING, WATER PASSAGE	TENUTA GOMMA	JOINT CAOUTCHOUC
15	REC332583	3852523	ARO TÓRICO	O-RING	FASCIA TONDA	JOINT TORIQUE
16	REC3852535	3852535	ARO TÓRICO	O-RING	FASCIA TONDA	JOINT TORIQUE
17	REC3852352	3852352	TUBO SUBIDA AGUA	WATER INLET HOSE	TUBO USCITA ACQUA	DURITE ENTRÉE D'EAU
18	REC3841481	3841481	FUELLE COLA con abrazadera	BELLOW KIT	CUFFIA CARDANO con fascetta	SOUFFLET AVEC BAGUE
	CEF500514K					
19	REC3850426	3850426	MANGUITO ESCAPE	EXHAUST HOSE	MANICOTTO SCARICO	SOUFFLET D'ÉCHAPPEMENT
	CEF500528					
20	RM3858631	3858631	KIT RETENES	SEAL KIT	KIT PARAOLIO	KIT JOINTS COMPLET
21	REC39631		KIT AROS	O-RINGS KIT	KIT FASCIE TONDE	KIT JOINT

TRANSOM SX-A TSK

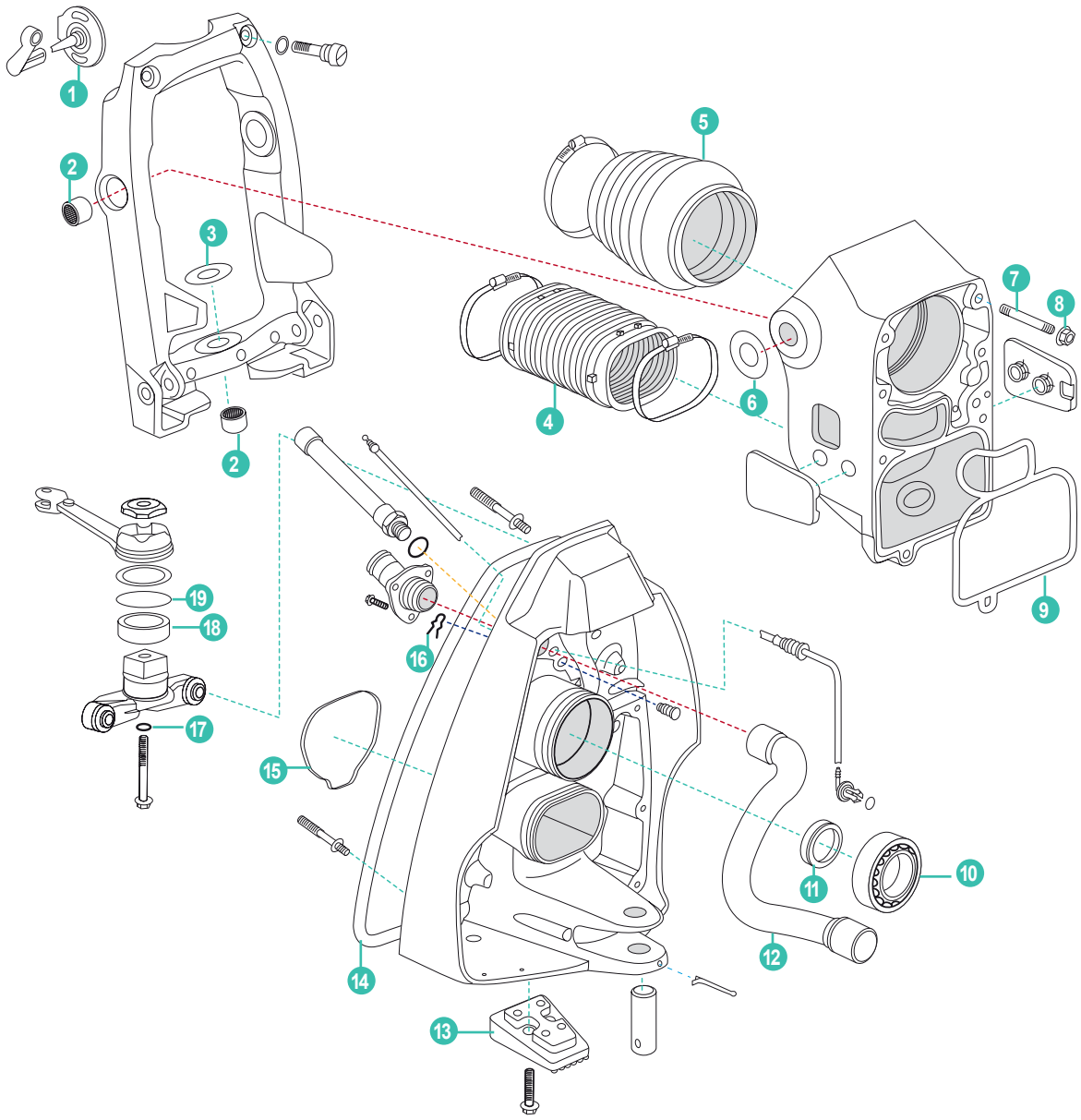

	REF	OEM				
1	REC21484383	21484383	SENSOR TRIM	TRIM SENDER	SENSORE TRIM	SONDE DE TRIM
2	REC3808228	3808228	CASQUILLO	BUSHING	BOCCOLA	BAGUE
3	REC3852558	3852558	ARANDELA	WASHER	RONDELLA	RONDELLE
4	REC3888916	3888916	FUELLES ESCAPE	EXHAUST BELLOW	CUFFIA SCARICO	SOUFFLET D'ÉCHAPPEMENT
5	RM22197130	22197130	KIT FUELLE	BELLOW KIT	KIT CUFFIA	KIT SOUFFLET DE CARDAN
6	REC3852558	3852558	ARANDELA	WASHER	RONDELLA	RONDELLE
7	REC3852551	3852551	ESPÁRRAGO	STUD	PERNO	GOUJON
8	REC11-859135	3852648	TUERCA	NUT	DADO	ÉCROU
9	REC3889788	3889788	JUNTA	GASKET	GUARNIZIONE	JOINT SPI
10	REC3888555	3888555	COJINETE	BEARING	CUSCINETTO	ROULEMENT
11	RM3883257	3883257	RETÉN	SEAL	TENUTA	JOITN SPI
12	REC3883777	3883777	MANGUERA	TUBO	TUBO	DURITE
13	REC3888817 REC23164611AL	3888817 3888816	ÁNODO DE ZN ÁNODO DE AL	ZN ANODE AL ANODE	ANODO ZN ANODO AL	ANODE ZN ANODE AL
14	REC3841011	3841011	JUNTA	GASKET	GUARNIZIONE	JOINT DE PLATINE
15	REC3841013	3841013	JUNTA	GASKET	GUARNIZIONE	JOINTI
16	REC3852555	3852555	SOPORTE	SUPPORT	SUPPORTO	SUPPORT
17	REC3852045	3852045	ARO TÓRICO	O-RING	O-RING	JOINT TORIQUE
18	REC3840761	3840761	CASQUILLO	BUSHING	BOCCOLA	BAGUE
19	REC946056	946056	ARO TÓRICO	O-RING	O-RING	JOINT TORIQUE

GUIA KITS RODAMIENTOS Y RETENES TRANSOM

FLYWHEEL CASING REPAIR KITS GUIDE

GUIDA KIT CUSCINETTI E PARAOLI TRANSOM

GUIDE KITS ROULEMENTS ET JOINTS SPI

	DIESEL	REF
B 16	80	REC22057
AQD 19	100	REC22057
AQD 21A	250	REC22059
AQD 21A,B	270, 280	REC22074
AQD 27	200	REC22059
AQD 29	200, 250	REC22059
AD 30A	290A, DP	REC22075
AQAD 30A	280DP, PT, 290A, DP	REC22075
AQAD 30A	Cardan drift / Cardan shaft	2 x REC22075
AD 31A,B	290A, DP, SP-C, DP-C, DP-D	REC22075
AQAD 31A	290A, DP	REC22075
TAMD 31 B	SP-A2, DP-A2	REC22075
AQD 32A	250	REC22059
AQD 32A	270, 280	REC22074
AQD 40A	280, DP, PT	REC22075
AQAD 40A,B	280, DP, PT, 290, DP	REC22075
AQAD 40B	Cardan drift / Cardan shaft	2 x REC22075
AD 40B	280, DP, 290, DP	REC22075
AD 41A	290, DP	REC22075
AD 41B	SP-A2-C, DP-C-D-B1	REC22075
AQAD 41 A	290A, DP	REC22075
AQD 41A	290A, DP	REC22075
D 41 B	SP-A2, DP-A2	REC22075
TAMD 41B	SP-A2, SP-C, DP-B1, DP-D	REC22075
KAD 42	SP-D	REC22075
AD31D	DP-D1, SP-C1	REC22161
AD31L-A	DO-D1, SX	REC22161
AD31P-A	DP-D1, SX	REC22161
AD31XD	DP-D1	REC22161
AD41D	DP-D1, SC-C1	REC22161
AD41L-A	DP-D1	REC22161
AD41P-A	DP-D1	REC22161
D14D	DO-D1, SP-C1	REC22161
D41L-A	DP-D1	REC22161
KAD32P-A	DP-E, DP-G, DPX	REC22161
KAD42B	DP-D1, DPX	REC22161
KAD42P-A	DP-D1, DPX	REC22161
KAD43P-A	DP-D, DP-E, DP-G, DPX	REC22161
KAD44P-A	DP-D, DP-E, DP-G, DPX	REC22161
KAD44P-B	DP-D	REC22161
KAD44P-C	DP-E, DP-G, DPX	REC22161
KAD300A	DP-G, DP-E, DPX	REC22161
KAMD42P-A	DP-D1, DPX	REC22161
KAMD44P-C	DP-E	REC22161
KAMD300A	DP-G, DP-E, DPX	REC22161
AD31XD	SP-C1	REC22163
TAMD31D	DP-D1, SP-C1	REC22163

	GAS	REF
AQ 171 A,C	290A, SP-A	REC22074
AQ 175, 200B, C, D	280, PT, 290	REC22075
AQ 205A	SP-A, DP-A	REC22075
AQ 211A	290A,DP, SP-A, DP-A	REC22075
AQ 225A, B, C, D, E, F	275, 280, PT, 280L, 290, A, DP	REC22075
230	275, SP-A, SP-A1	REC22074
AQ 231A,B	275, 285, 290A,DP	REC22075
250, 251	SP-A, SP-A1	REC22074
AQ 255A,B	280	REC22075
AQ 260A	280, PT, 290	REC22075
AQ 271A,B,C,D	275, 290A	REC22075
AQ 290A	280PT, 290	REC22075
AQ 311 A,B	290A, SP-A	REC22075
430	SP-A, DP-A	REC22075
430A	SP-A1, SP-A2, SP-C, DP-A, DP-A1, DP-A2, DP-C	REC22075
430B	SP-C, DP-C	REC22075
431A	SP-A, SP-A1, SP-A2, SP-C, DP-A, DP-A1, DP-A2, DP-C	REC22075
431B	SP-C, DP-C	REC22075
432A	SP-C1, DP-C1	REC22055
434A	SP-C1, DP-C1	REC22055
500B	SP-A1, SP-A2, SP-C, DP-A1, DP-A2, DP-C	REC22075
500B	SP-C1, DP-C1, DP-D1	REC22055
501B	SP-A2, SP-C, DP-A2, DP-C	REC22075
501B	SP-C1, DP-C1, DP-D1	REC22055
570A	SP-A, SP-A1, SP-A2, SP-C, DP-A, DP-A1, DP-A2	REC22075
570A	SP-C1, DP-C1, DP-D1	REC22055
572A	SP-C, DP-C	REC22075
572A	SP-C1, DP-C1, DP-D1	REC22055
740A	DP-B, DP-B1, DP-C	REC22075
740B	DP-C, DP-C	REC22075
740B	SP-C1, DP-C1, DP-D1	REC22055
AQ 115A,B,C	250	REC22059
AQ 120A	200	REC22059
AQ 120B	270	REC22074
AQ 125A,B	270, 275A	REC22074
AQ 130	100	REC22057
AQ 130	250	REC22059
AQ 130	270, 270T, 280	REC22074
AQ 131A,B,C,D	275, 290, SP-A	REC22074
AQ 140A	280, 280PT	REC22074
AQ 145A,B	280, 280PT, 290	REC22074
AQ 151A,B,C	290, 290A, SP-A	REC22074
AQ 165A	250	REC22060
AQ 165A	250	REC22074
AQ 170	250, 270, 270T, 280, 280T	REC22074
AQ 170	270	REC22060


REC22057


REC22161


REC22074


REC22060


REC22059


REC22163


REC22055


REC22075

RODAMIENTOS EJE | SHAFT BEARING | CUSCINETTO ASSE | ROULEMENT D'ARBRE

new

REF	OEM	
RECV11013	11013 7011013	30 x 62 mm



RETÉN EJE CAMPANA | SHAFT BELL SEAL | PARAOLIO ASSE CAMPANA | JOINT SPI ARBRE DE CASQUE

new

REF	OEM		
REC958860	958860 941870	V6&V8, Aq inline D30,31,41,40,21,42,43,44,300,13,3,4,6	62 x 35 mm



CIRCLIP PARA EJE | SHAFT CLIP | CLIP ASSE | CLIP ARBRE

new

REF	OEM	
REC914462	914462	30 x 1.5 mm
REC914533	914533	62 X 2 mm



REC914462



REC914533

RETÉN TRANSOM | SEAL OIL | TENUTE | JOINT SPI

new

REF	OEM		
REC946242	946242	55 x 35 mm	V6 & V8 AQ inline



GOMAS TRANSOM | SEALING STRIPS | GOMMA | JOINT DE TRANSOM

REF	OEM	
REC897726	897726	AQ 200, 250, 270, 270T, 275, 275A AQ280, T, D, P, SP-A/MT



REF	OEM	
REC852868	852868	AQ290, A, DP SP-A, A1, A2, C, C1 DP-A1, A2, B, B1, C, C1, D, D1, X



GOMA CIERRE IPS | IPS RUBBER LOCK | GOMMA CHIUSURA IPS | JOINT TORIQUE IPS

REF	OEM
REC22256171	22256171 3861068



GOMAS CAMPANA | RUBBER RING | GOMMA CAMPANA | ANNEAU DE CLOCHE

REF	OEM	
REC813967	813967	
REC804190	804190	



FUELLES BELLOW CUFIE SOUFFLET

FUELLE ESCAPE EXHAUST BELLOW CUFFIE SCARICO SOUFFLET ÉCHAPPEMENT	OEM	FUELLE TRANSMISIÓN DRIVE BELLOW CUFFIE CARDANO SOUFFLET CARDAN	OEM	
REC876631	876631	REC876294	876294	AQ 200, 250, 270, 275, 280, 280DP, 290, 290DP
CEF500505K	875848	CEF500510K	875826	SP-A, A/MT, A1, A2, C
RM876631		RM876294	897889	DP-A, A1, A2, B, C, D, X





Con protección metálica. Sin válvula.
With metallic protection, w/o valve.
Con protezione metallica. Senza valvola.
Avec protection métallique. Sans vanne.

FUELLE ESCAPE EXHAUST BELLOW CUFFIE SCARICO SOUFFLET ÉCHAPPEMENT	OEM	FUELLE TRANSMISIÓN DRIVE BELLOW CUFFIE CARDANO SOUFFLET CARDAN	OEM	
REC876633		REC876294	876294	AQ 280, 280T, 280PT, 280DP
CEF500505FL	876633	CEF500510K	875826	SP-A
RM876633		RM876294	897889	DP-A, A1, A2, B, C, D, X





Con protección metalica. Con válvula.
With metallic protection, with valve.
Con protezione metallica. Con valvola.
Avec protection métallique. Avec vanne.

FUELLE ESCAPE EXHAUST BELLOW CUFFIE SCARICO SOUFFLET ÉCHAPPEMENT	OEM	FUELLE TRANSMISIÓN DRIVE BELLOW CUFFIE CARDANO SOUFFLET CARDAN	OEM	
REC3850426	3850426	REC3841481	3841481	SX-S, C1, C2, R, R1, R2, M, M1
CEF500528		CEF500514K	3854127	DP-SM





FUELLE ESCAPE EXHAUST BELLOW CUFFIE SCARICO SOUFFLET ÉCHAPPEMENT	OEM	FUELLE TRANSMISIÓN DRIVE BELLOW CUFFIE CARDANO SOUFFLET CARDAN	OEM	
REC3888916	3888916	RM22197130	22197130	SX-A
CEF500536K				DPS-A, B





Nuevo diseño de goma rígida
New design rigid rubber
Nuovo design in gomma rigida
Nouveau design en caoutchouc rigide

FUELLE ESCAPE EXHAUST BELLOW CUFFIE SCARICO SOUFFLET ÉCHAPPEMENT	OEM	FUELLE TRANSMISIÓN DRIVE BELLOW CUFFIE CARDANO SOUFFLET CARDAN	OEM	
	3588753			
CEF500538K	3808536	REC3808898	3808898	DPH-A, B, C, D
	3862168	CEF500537K	3594509	DPR-A, B, C, D





FUELLE ESCAPE EXHAUST BELLOW CUFFIE SCARICO SOUFFLET ÉCHAPPEMENT	OEM	FUELLE TRANSMISIÓN DRIVE BELLOW CUFFIE CARDANO SOUFFLET CARDAN	OEM	
RM3885870	3885870	RM21277185	21277185 3886847 3841482	X-B, BLT TSK



FUELLE ESCAPE EXHAUST BELLOW CUFFIE SCARICO SOUFFLET ÉCHAPPEMENT	OEM	FUELLE TRANSMISIÓN DRIVE BELLOW CUFFIE CARDANO SOUFFLET CARDAN	OEM	
REC3860384	3860384 3858139	REC876294 CEF500510K RM876294	876294 875826 897889	DP-G DPX-A



FUELLE TRANSMISIÓN DRIVE BELLOW CUFFIE CARDANO SOUFFLET CARDAN

REF	OEM	
REC875512	875512 875827 804186	AQ80, 100, 100B, 100S



MANGUITOS COLA DRIVE HOSE MANICOTTO PIEDE DURITE D'EMBASE

REF	OEM	
REC875822	875822	AQ 200, 250, 270, 275, 280, 280DP, 280PT, 285A
CEF501011	22303438	SP-A/MT



REF	OEM	
RM876632	876632 875747 854555	AQ290, 290A, 290DP SP-A, A1, A2, C DP-A, A1, A2, B, B1, C, D, X



REF	OEM	
REC3852352	3852352	SX DP-S



REF	OEM	
REC832831	832831	AQ 270T, 280T



CAMBIO | SHIFT | CAMBIO | CHANGEMENT

MECANISMO DE CAMBIO | SHIFT MECHANISM | MECCANISMO DI CAMBIO | MECANISME DE CHANGEMENT

new

REF	OEM	
REC21256410	21256410 3889982 3843471	DPS-A, DPS-B, DPS-C FWD, SX-A, SX-D



new

REF	OEM	
REC22273952	22273952 3762385	DPH-DPR



PISTÓN SELECTOR | SHIFT PLUNGER | PISTONE SELETTORE | SÉLECTEUR DE VITESSE

new

REF	OEM	
REC3856008	3856008 3852325 0897816	AQUAMATIC Inversoras | Inverters | Inversore | Inverseurs



SOPORTE MOTOR | ENGINE MOUNT SCREW | SUPPORTI MOTORE | SUPPORT MOTEUR

REF	MÁX
GS38103	55 kg 120 lbs
GS38104	160 kg 355 lbs

Fabricado en metal y neopreno vulcanizado.
Manufactured in metal and vulcanized neoprene.
Supporto elastico in metallo e neoprene
Fabriqué en métal et en néoprène vulcanisé.



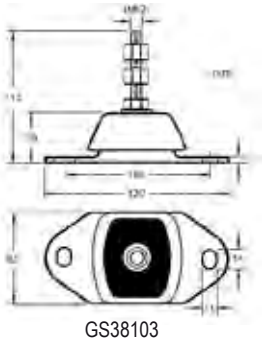

GS38103

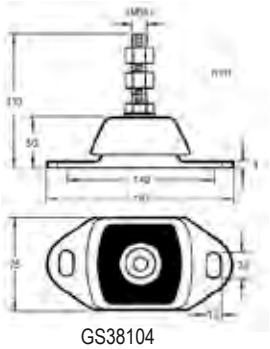

GS38104

REF	OEM	
REC803762	803762	BB30, 100, 115, 165, 170 MB10A, 18, 20 2001, 2002, 2003, 2010, 2020, 2030, 2040 D1, 2 MD1, 2, 3, 5, 6, 7, 11, 17, 21, 22, 29, 32 AQD2 D1-13A, B, F D1-20A, B, F D1-30A, B, F D2-40A, B, F D2-55A, B, C, D, E, F D2-75A, B, C, F

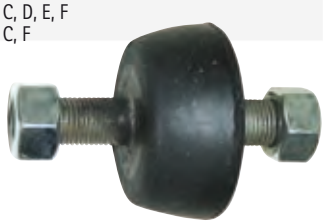

REF	OEM	
REC843323	843323	AQAD40A, B AQAD41A AQD40A AD41A, B, D, L-A, P-A D41A, B, D, L-A KAD42A, B, P-A



TORNILLO | SCREW | VITI | BOULON

REF	OEM		
REC861431	861431	D1-13A, B, F D1-20A, B, F D1-30A, B, F D2-40A, B, F MD2010A, B, C, D MD2020A, B, C, D MD2030A, B, C, D MD2040A, B, C, D	AQAD40A, B AQAD41A AQD40A AD41A, B, D, L-A, P-A D41A, B, D, L-A KAD42A, B, P-A



KIT PRENSAESTOPAS DE GOMA — RUBBER SEAL KIT — KIT PREMISTOPPA IN GOMMA — KIT PRESSE ETOUPE

REF	Ø EJE / Ø SHAFT / Ø ASSE / Ø ARBRE	A	B	C
RM828254	25 mm	36 mm	66 mm	42 mm
RM828422	30 mm	36 mm	72 mm	48 mm
RM828526	35 mm	36 mm	82 mm	54 mm
RM828527	40 mm	36 mm	82 mm	60 mm
RM3819722	45 mm	36 mm	95 mm	64 mm
RM3819723	50 mm	36 mm	95 mm	68 mm
RM3819724	1"	36 mm	66 mm	1-5/8"
RM3819725	1 1/4"	36 mm	76 mm	2"
RM3819726	1 1/2"	36 mm	85 mm	2-1/4"
RM3819727	1 3/4"	36 mm	95 mm	2-1/2"
RM3819728	2"	36 mm	95 mm	2-1/2"



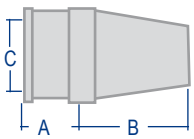

DAMPER — VIBRATION DAMPER — DAMPER — DAMPER

REF	OEM		
REC855694	855694 835550 855648	430B 431B 432A 434A 570A 572A 500B 501B-MS4 570A-MS4 BB225A, B, C BB260A, B, C 231A 261A 4.3L HU, LK, GL, NC 5.7L Gi-HU, LK, MD, NC	14"



REF	OEM		AGUJERO / HOLE / FUORI / TROU	
REC855617	855617	AD41A, B, D AQAD41A D41A, B, D KAD42A, B, D, P KAD43P KAD44PEDC KAMD42A, B TAMD41A, B TMD41A, B KAD300A	Ø 34 mm	26



REF	OEM			AGUJERO / HOLE / FUORI / TROU	
REC855389	855389 831778 841895	230A, B, 250A, B 251A AD31A, B, D, XD AQ115A, B AQ120B AQ125A, B AQ130A, B, C, D AQ140A AQ145A, B AQ151A, B, C AQ171A, C AQAD31A, 40B AQD40A	BB115A, B, C BB140A BB145A KAD32P MB20A, B, C MB30A, 31A, 40A TAMD30A, B TAMD31A, B, D TAMD40A, B TMD30A TMD31A, B, D TMD40A, B, C	Ø 34 mm	26

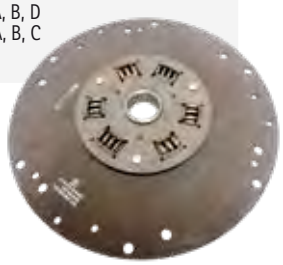

new

REF	OEM		AGUJERO / HOLE / FUORI / TROU	
REC841893	841893 824991 831106	B30 D21 D40	34 mm	26



ACOPLAMIENTOS MOTOR — ENGINE COUPLER ASSEMBLIES — ACCOPPIAMENTO MOTORE — ACCOUPLEMENT MOTEUR

REF	OEM		AGUJERO / HOLE / FUORI / TROU	CUBO SALIDA / HUB OUTER / CUBO USCITA / SORTIE DU CUBE
REC3853962	3853962	2.5L (1986) 3.0L (1986-90) 4.3L 5.0L 5.7L (1986) KX & KWB 7.4L (1990-98) 8.2L (1992-93, 1998) DPX375, 385, 415	Ø 91 mm	Ø 43 mm
REC3858437	3853917	4.3L (1986-98) 5.0L (1986-88, 1998) 5.7 (1986-92, 1994, 1996-98)	Ø 76 mm	Ø 43 mm
REC3853862	3853862	5.0 & 5.8L (1989-96)	Ø 76 mm	Ø 35 mm



REC3853962



REC3858437



REC3853862

SISTEMA DE PROPULSIÓN
PROPULSION SYSTEM
SISTEMA DI PROPULSIONE
SYSTEME DE PROPULSION

HÉLICES ALUMINIO E INOXIDABLE DE 3 Y 4 PALAS
3 & 4 BLADE ALUMINIUM & SS PROPELLERS
ELICHE ALLUMINIO E INOX DA 3 E 4 PALE
HELICE ALUMINIUM ET INOX 3 ET 4 PALES

CÓDIGO DE REFERENCIAS — PART NO. CODING SYSTEM — SISTEMA DI CODICE — CODAGE DES REFERENCES

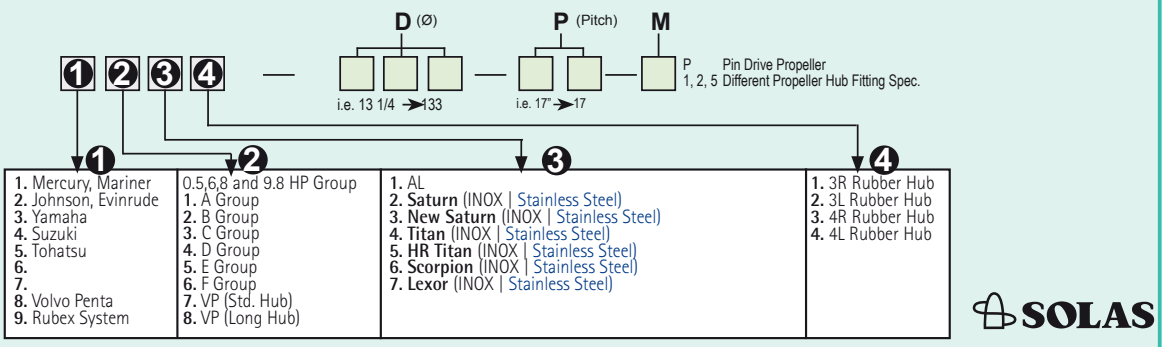

SOLAS

AMITA 3

SOLAS

Hélice de aluminio con núcleo de goma de gran resistencia.

Aluminum propeller with heavy duty rubber hub.

Eliche di alluminio con mozzi in gomma ad alta resistenza.

Hélice en aluminium avec moyeu en caoutchouc



AMITA 3 PLUS

SOLAS

Diseño de pala grande para un área más grande.

High camber blade and large blade area design.

Con un'area più ampia nelle pale.

Conception d'une grande pale pour une plus grande surface de poussée.



TITAN

SOLAS

- Hélices de acero inox de 3 palas.
- Diseño de pala grande para un área más grande.
- Gran capacidad de transporte de carga.
- Excelente economía de combustible.
- 3 blade stainles steel propeller.
- High camber blade and large blade area design.
- Great load carrying capability.
- Excellent fuel economy.
- Eliche a 3 pale in acciaio inossidabile.
- Con un'area più ampia nelle pale.
- Ampia capacità di carico.
- Eccellente economia di carburante.
- Hélices à 3 pales en acier inoxydable.
- Conception d'une grande pale pour une plus grande surface de poussée.
- Capacité de charge élevée.
- Excellente économie de carburant.



NEW SATURN

SOLAS

Hélices de acero inoxidable. Ofrece buena aceleración y rendimiento. Tamaño más pequeño que ofrece un diámetro extragrande.

Stainless steel propeller. Offers good acceleration & all-round performance. Smaller pitch sizes offered in extra large diameter with increased blade area.

Eliche di acciaio inox. Buona accelerazione. Piccole dimensione che offre un più grande diametro.

Hélice inox, offrant de bonnes accélérations et performances. Taille de pas reduite pour les modèles de grands diamètres avec une surface de pale plus importante.



HR TITAN 3 PROP

SOLAS

Hélice de acero inoxidable. Alto rendimiento para cascos de alta velocidad.
La inclinación de la hoja proporciona un excelente elevación de proa y aceleración.
El diseño de copa grande aumenta la mordida y reduce el deslizamiento.

Stainless steel propeller. Performance prop for high speed planning hulls. High rake blade design provides excellent bow lift and acceleration. Heavy cup design increases bite and reduces slip.

Eliche in acciaio inox. Alte prestazioni per scafi ad alta velocità. Il passo della pala fornisce un'eccellente spinta e accelerazione. Il disegno aumenta le prestazioni.

Hélice en acier inoxydable. Hélice de performance pour les coques planantes à grande vitesse. La conception de la pale à haut râteau offre une excellente portance et accélération. La conception des grandes pales augmente l'attaque et réduit le glissement.



GUÍA DE HÉLICES CON NÚCLEO INTEGRADO — PROPELLERS APPLICATION WITH RUBBER HUB — GUIDA ELICHE CON MOZZO — GUIDE DES HELICES AVEC MOYEUX

	R.O. OEM	A	B	D	P	R	TIPO	AL		INOX STAINLESS STEEL		
								AMITA 3	AMITA 3 PLUS	NEW SATURN	TITAN	HR TITAN 3
AQUAMATIC												
AQ270	854996			15	15	R				SOL8831-150-15		
AQ275	854981			15	15	L				SOL8832-150-15		
AQ280	854997			15	17	R				SOL8831-150-17		
AQ290	854982	17	3	15	17	L	AL			SOL8832-150-17		
Cubo largo	854998			15	18	R				SOL8831-150-19		
Long Hub	854983			15	19	L				SOL8832-150-19		
Mozzo lungo	854999			15	21	R				SOL8831-150-21		
11,5 mm	854984			15	21	L				SOL8832-150-21		
AQ200D/290	872001			15	15	R		SOL8811-150-15	SOL8811-158-15		SOL8841-156-15	
AQ225D/290	854987			15	15	L		SOL8812-150-15	SOL8812-158-15		SOL8842-156-15	
AQ260D/290	872002			14.8	17	R		SOL8811-148-17	SOL8811-155-17		SOL8841-156-17	
AQ290A/290	854988			14.8	17	L		SOL8812-148-17	SOL8812-155-17		SOL8842-156-17	
AQAD40B/290	872003			14.5	19	R		SOL8811-145-19	SOL8811-153-19		SOL8841-156-19	
AQAD41/290	854989		3	14.5	19	L	AL	SOL8812-145-19	SOL8812-153-19		SOL8842-156-19	
Cubo largo	872004			14.3	21	R		SOL8811-143-21	SOL8811-153-21		SOL8841-156-21	
Long Hub	854990	17		14.3	21	L		SOL8812-143-21	SOL8812-153-21		SOL8842-156-21	
Mozzo lungo				14.2	23	R		SOL8811-142-23			SOL8841-156-23	
				14.2	23	L		SOL8812-142-23			SOL8842-156-23	
Cubo estandar				15.5	15	L		SOL8712-150-15				
Standard Hub				14.8	17	L		SOL8712-148-17				
Mozzo standard				14.5	19	L	AL	SOL8712-145-19				
9,5 mm				14.3	21	L		SOL8712-143-21				
SX												
	3817466			15	15	R		SOL8611-150-15	SOL8613-148-15			SOL8641-155-15
	3817471			15	15	L		SOL8612-150-15	SOL8614-148-15			SOL8642-155-15
	3817467			14.8	17	R		SOL8611-148-17	SOL8613-145-17			SOL8651-148-17
3.0 L	3817472			14.8	17	L		SOL8612-148-17	SOL8614-145-17			SOL8652-148-17
4.3 L	3817468			14.5	19	R	AL	SOL8611-145-19	SOL8613-143-19			SOL8651-148-19
5.0 L	3817473	19	3	14.5	19	L		SOL8612-145-19	SOL8614-143-19			SOL8652-148-19
5.7 L	3817469			14.3	21	R		SOL8611-143-21	SOL8613-140-21			SOL8651-145-21
5.8 L				14.3	21	L		SOL8612-143-21	SOL8614-140-21			SOL8652-145-21
7.4 L	3817470			14.2	23	L		SOL8611-142-23				SOL8642-145-23
	3850305			15 5/8	15	R	Inox SS					SOL8651-140-24
	3850315			15 5/8	15	L						SOL8652-140-24

HÉLICES ALUMINIO E INOX CON NÚCLEO INTERCAMBIABLE

Altas prestaciones. Núcleo de goma intercambiable con sistemas Flo-Torq & Vorterx System. Disponible en acero inox y aluminio

AL	D	P	R
3 PALAS | BLADES | PALE | PALES			
SOL9511-150-15	15	15	R
SOL9512-150-15	15	15	L
SOL9511-148-17	14.8	17	R
SOL9512-148-17	14.8	17	L
SOL9511-145-19	14.5	19	R
SOL9512-145-19	14.5	19	L
SOL9511-143-21	14.3	21	R
SOL9512-143-21	14.3	21	L
4 PALAS | BLADES | PALE | PALES			
SOL9513-148-15	14.75	15	R
SOL9513-145-17	14.5	17	R
SOL9513-143-19	14.25	19	R
SOL9513-140-21	14	21	R

ALUMINIUM & SS PROPELLERS WITH INTERCHANGEABLE HUB

High performance / Ruber Hub interchangeable with Flo-Torq & Vorterx Sistem. Avaliable in stainles Steel & Aluminium Prpeller

INOX / SS	D	P	R
3 PALAS | BLADES | PALE | PALES			
SOL9571-158-15	$15^{3/4}$	15	R
SOL9572-158-15	$15^{3/4}$	15	L
SOL9571-155-17	$15^{1/2}$	17	R
SOL9572-155-17	$15^{1/2}$	17	L
SOL9571-153-19	$15^{1/4}$	19	R
SOL9572-153-19	$15^{1/4}$	19	L
SOL9571-150-21	15	21	R
SOL9572-150-21	15	21	L
SOL9571-148-23	$14^{3/4}$	23	R
SOL9572-148-23	$14^{3/4}$	23	L

ELICHE ALLUMINIO E INOX CON MOZZO INTERCAMBIABILE

Alte prestazioni. Mozzo in gomma intercambiabile con sistema Flo-Torq & Vortex System. Disponibile in acciao inox e alluminio.

INOX / SS	D	P	R
4 PALAS | BLADES | PALE | PALES			
SOL9531-145-15	$14^{1/2}$	15	R
SOL9532-145-15	$14^{1/2}$	15	L
SOL9531-143-17	$14^{1/4}$	17	R
SOL9532-143-17	$14^{1/4}$	17	L
SOL9531-140-19	14	19	R
SOL9532-140-19	14	19	L
SOL9531-140-21	14	21	R
SOL9532-140-21	14	21	L
SOL9531-140-23	14	23	R
SOL9532-140-23	14	23	L

HÉLICES ALUMINIUM ET INOX AVEC MOYEU INTERCHANGEABLE

Haute performance.Moyeu en caoutchouc interchangeable avec le système Flo-Torq et Vorterx System. Disponible en inox et en aluminium.

REF	A	
SOLRBX-105	19	SX (1994+)



RUBEX



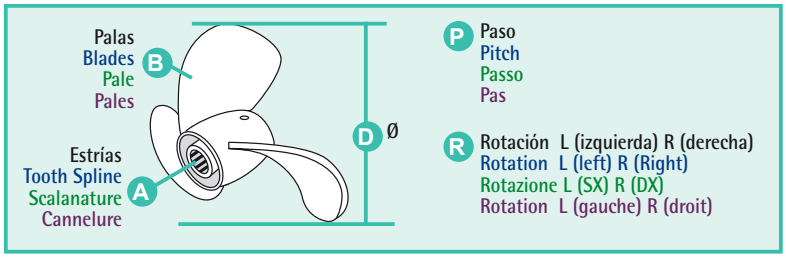

AQUAMATIC, 200, 250, 270, 275, 280 Y 290

CUBO LARGO 11,5 cm / LONG HUB 11,5 cm / MOZZO DA 11,5 cm / MOYEU LONG 11,5 cm

REF	OEM	REF	OEM	D	P
RM854977	854977	RM854992	854992	14	17
RM854978	854978	RM854993	854993	14	19
RM854979	854979	RM854994	854994	14	21
RM854982	854982	RM854997	854997	15	17
RM854983	854983	RM854998	854998	15	19
RM854984	854984	RM854999	854999	15	21
RM854986	854986			16	13

Para instalar hélices de cubo largo en colas 270 con eje taladrado, 275, 280 y 290 se necesitan: / Following parts are needed to install long hub props in drilled shaft 270, 275, 280 & 290 drives: / Per installare eliche con il mozzo lungo 11,5 cm nei piedi 270, 275, 280 e 290 servono: / Hélices avec moyeu long pour les embases avec arbre perforé 270, 275, 280, et 290 :

REF				
REC854045	CONO	CONE	CONO	CONE
REC850888	ARANDELA	O-RING	RONDELLA	RONDELLE
REC850889	TORNILLO	SCREW	VITE	VIS

CUBO ESTÁNDARD 9,5 cm / STANDARD HUB 9,5 cm / MOZZO STANDARD 9,5 cm / MOYEU STANDARD 9.5 cm

REF	OEM	REF	OEM	D	P
RM814626	814626	RM814631	814631	14	15
RM814627	814627	RM814632	814632	14	17
RM814628	814628	RM814633	814633	14	19
RM813316	813316	RM813317	813317	15	13
RM814611	814611	RM814615	814615	15	15
RM814612	814612	RM814616	814616	15	17

Para instalar hélices de cubo standard en colas con nº de serie PZ2877179 se necesitan: / Following parts are needed to install standard hub props in drives with serial # PZ2877179: / Per installare eliche con il mozzo standard nei piedi con nº di serie PZ2877179 servono: / Nécessaire pour intaller les hélices à moyeu std avec les embases N° de série PZ2877179 :

REF				
REC854045	CONO	CONE	CONO	CONE
REC854047	ESPACIADOR	THRUST WASHER	SPESSORE	ENTRETOIS
REC850888	ARANDELA	O-RING	RONDELLA	RONDELLE
REC850889	TORNILLO	SCREW	VITE	VIS

Las colas con nº de serie anterior a PZ2877179 se necesitan: / Earlier models to PZ2877179 need: / Per piedi con nº di serie precedente a PZ2877179 serve: / Nécessaire pour les embases avec N° de série anterieur à PZ2877179

REF				
REC897367	ARANDELA	WASHER	RONDELLA	RONDELLE

DUOPRO AL — 3 +4

Esta tabla es orientativa, debe comprobarse con la documentación del motor. / This table is as orientation. Must be checked with the engine information / Questa tabella è come orientamento. Deve essere controllato con le informazioni del motore / Ce tableau est un guide et doit être vérifié avec la documentation du moteur.

GAS KAD42, 43, 44, 300	DIESEL	HÉLICE DELANTERA / FRONT PROPELLER / ELICHE ANTERIORI / HÉLICE AVANT — 3 PALAS IZQUIERDA / 3 BLADES LEFT / 3 PALE SX / 3 PALES GAUCHE	HÉLICE TRASERA / REAR PROPELLER / ELICHE POSTERIORE / HÉLICE ARRIÈRE — 4 PALAS DERECHA / 4 BLADES RIGHT / 4 PALE DX / 4 PALES DROITE
B3			REC4-17ALU
	A3 Altas prestaciones / high performance / Alte prestazioni / Haute performance		REC4-19ALU
	A3		REC4-19ALU
B4			REC4-19ALU
	A4 Altas prestaciones / high performance / Alte prestazioni / Haute performance		REC4-19ALU



DP280, DP290, DP-A, DP-E

REF	OEM	ANTIGUO TIPO OLD TYPE TIPO VECCHIO TYPE ANCIENNE A	B	NUEVO TIPO NEW TYPE TIPO NUOVO TYPE NOUVEAU J
REC21924262	854814 854765 2194262	2	1	2
REC21924263	854815 854766 21924263	3	2	3
REC21924264	854816 854767 21924264	4	3	4
REC21924265	854817 854768 21924265	5	4	5
REC21924266	854769 854818 21924266	6	5	6
REC21924267	854819 854770 21924267	7	6	7
REC21924268	854820 854771 21924268	8	7	8
REC21924269	854821 854772 21924269	9	8	9
REC21924270	854773 21924270	10		10
BVA0990730A	854766	3		
BVA0990740A	854767	4		
BVA0990750A	854768	5		
BVA0990760A	854769	6		
BVA0990770A	854770	7		
BVB0990630A	854816		3	
BVB0990640A	854817		4	
BVB0990650A	854818		5	
BVB0990660A	854819		6	
BVB0990670A	854820		7	





Nuevo "Type J" sustituye al "Type A" y al "Type B"
New "Type J" replaces "Type A" and "Type B"
Il nuovo "Tipo J" sostituisce "Tipo A" e "Tipo B"
Le nouveau "Type J" se substitue au "Type A" et "Type B"



Para motores que excedan los 240HP o barcos de +38 knots se recomienda la instalación de hélices inox "Type C"
For engines exceeding 240HP or +38 knots, the installation of "Type C" stainless steel propellers is recommended
Per motori superiori a 240 HP o +38 nodi, si consiglia l'installazione di eliche in acciaio inossidabile "Tipo C"
Pour les moteurs supérieurs à 240 hp ou +38 noeuds, on recomande les hélices inox "type C".

DUOPRO INOX / SS
DP280, DP290, DP-G

3 +4

KAD42, 43, 44, 300		Todos los motores All engines tutti motori Tous les moteurs	Hélice delantera 3 palas izquierda Hélice trasera 4 palas derecha Front propeller 3 blades left Rear propeller 4 blades right Eliche anteriori 3 pale Eliche posteriore 4 pale Hélice avant 3 pales gauche Hélice arrière 4 pales droite
	A2		RECC2
B2			RECC2
		C2	RECC2
	A3		RECC3
B3			RECC3
	A6		RECC6
	A7		RECC6
B6			RECC6
		C5	RECC6
B5	A4	C4	RECC5



DUOPRO AL
DPS & XDP

4 +4

	REF	OEM
D2 / I2	RM3851482	3851482 21258482
D3 / I3	RM3851483	3851483 21258483
D4 / I4	RM3851484	21258484
D5 / I5	RM3856365	21258485
D6 / I6	RM3856366	3856366 21258486
D7 / I7	RM3856367	3856367 21258487

La nueva generación de hélices "Type I" sustituye al "Type D"
The new generation of propellers "Type I" replaces "Type D"
La nuova generazione di eliche "Tipo I" sostituisce "Tipo D"
La nouvelle génération d'hélice. "Type I" se substitue au "Type D"



S-DRIVE 110 / 120 / 130 / 150

REF	OEM	B	D	P	R
REC23478919	853583	2	17	16	LH
REC23478969	853588	3	17	14	LH

RECmar

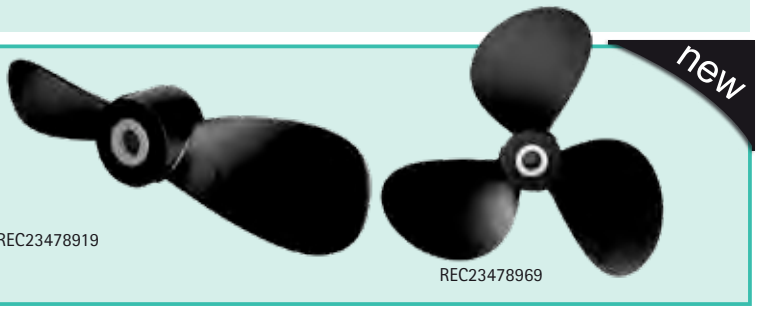

REC23478919

REC23478969

DUOPRO NIBRAL DPH

3+4

Diseñado para capturar el tremendo par de los motores D4 y D6, la geometría de la pala patentada proporciona la interacción óptima entre las hélices delanteras y traseras para una eficiencia sobresaliente y un funcionamiento sin problemas. El gran área de la pala y la gran resistencia aseguran el máximo agarre y maniobrabilidad. La aleación nibral (níquel-bronce-aluminio) extremadamente fuerte garantiza un crecimiento mínimo y una excelente durabilidad. Su completo aislamiento de goma y aislamiento galvánico lo hace perfectamente compatible con las hélices DPH.

Designed to capture the tremendous torque from the D4 & D6 engines, the patented blade geometry provides optimal interaction between front and rear propellers for outstanding efficiency and smooth and comfortable operation. The large blade area and great strength ensure maximum grip and maneuverability. The extermely strong nibral (nickel - bronze-aluminium) alloy ensures minimun growth and excellent durability. Complete wit shock-absorbing rubber brushing and galvanic isolation makes ti perfectly matched for the DPH drives.

Progettata per ottimizzare la straordinaria coppia dei motori D4 e D6, la geometria della pala brevettata offre un'interazione ottimale tra eliche anteriori e posteriori per un'efficienza eccezionale ed un funzionamento fluido e confortevole. L'ampia area della pala e la grande robustezza garantiscono la massima aderenza e manovrabilità. La lega nibral (nickel - bronzo - alluminio) estremamente robusta garantisce una crescita minima e un'eccellente durata. Completo di gomma ammortizzante e isolamento galvanico lo rende perfettamente abinabile ai DPH.

Conçue pour exploiter l'énorme couple des moteurs D4 et D6, la géométrie brevetée des pales assure une interaction optimale entre les hélices avant et arrière pour une efficacité exceptionnelle et un fonctionnement en douceur. La grande surface de la pale et sa grande résistance garantissent une prise en main et une manœuvrabilité maximales. L'alliage nibral (nickel bronze aluminium) extrêmement résistant assure une déformation minimale et une excellente durabilité. Son isolation complète en caoutchouc et son isolement galvanique le rendent parfaitement compatible avec les embases DPH.

MOD.	REF	OEM
G4	REC22898644	22898644
G5	REC22898645	22898645
G6	REC22898646	22898646
G7	REC22898647	22898647

VOLVO PENTA

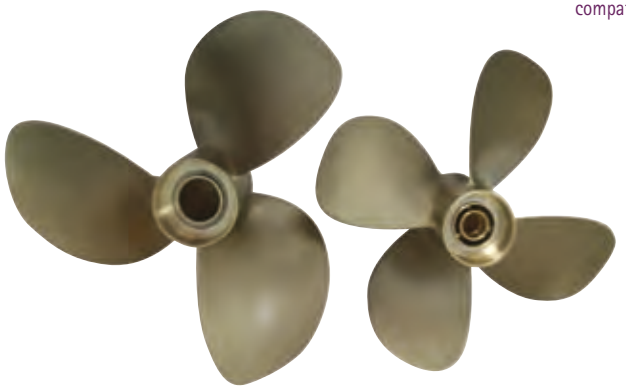

KIT LLAVE HÉLICES DP | DP PROP WRENCH KIT | KIT CHIAVE ELICHE DP | KIT CLÉ D'HÉLICE DP

REF	OEM
REC885195	885195



ACEITE PARA MOTOR VOLVO | VOLVO ENGINE OIL | OLIO PER MOTORE VOLVO | HUILE POUR MOTEUR VOLVO

TRANSMISSION OIL

Las propiedades de lubricación protegen el accionamiento y la transmisión incluso bajo cargas pesadas. También proporciona una excelente protección contra la corrosión. Soporta altas temperaturas sin romperse.

Lubrication properties protect drive and transmission even under heavy load. Also provides excellent corrosion protection. Withstands high temperatures without breaking down.

Le proprietà di lubrificazione proteggono l'azione e la trasmissione anche sotto carico pesante. Offre inoltre un'eccellente protezione dalla corrosione. Resiste alle alte temperature senza rompersi.

Les propriétés lubrifiantes protègent l'entraînement et la transmission, même sous de fortes charges. Offre également une excellente protection contre la corrosion. Résiste à des températures élevées sans se dégrader.

REF	OEM		VISCOSIDAD VISCOSITY VISCOSITA VISCOSITE	GRADO GRADE GRADE GRADE
REC3809445	3809445	5 L	SAE 80W-90	API GL-5

VOLVO PENTA



SYNTHETIC PETROL

Especialmente desarrollado para motores de alto rendimiento. Las propiedades especiales de este aceite le permiten lubricar el motor incluso durante el arranque a baja temperatura. El aceite combate la acumulación de lodo y brinda una excelente protección contra el desgaste. Especialmente adecuado para motores que están sujetos a arranques y paradas frecuentes.

Specially developed for high performance engines. The special properties of this oil allow it to lubricate the engine even during low temperature starting. The oil combats sludge buid-up and gives excellent protection against wear. Particularly suitable for engines that are subject to frequent starting and stopping.

Sviluppato appositamente per motori ad alte prestazioni. Le proprietà speciali di questo olio consentono di lubrificare il motore anche durante l'avviamento a bassa temperatura. L'olio combatte il fango accumulato e offre un'eccellente protezione contro l'usura. Particolarmente adatto per motori soggetti a frequenti avviamenti e arresti.

Spécialement conçu pour les moteurs à haute performance. Les propriétés particulières de cette huile lui permettent de lubrifier le moteur même lors des démarrages à basse température. L'huile combat l'accumulation de boue et offre une excellente protection contre l'usure. Particulièrement adapté aux moteurs soumis à des démarrages et arrêts fréquents.

REF	OEM		VISCOSIDAD VISCOSITY VISCOSITÀ VISCOSITÉ	GRADO GRADE GRADE GRADE
REC21363429	21363429	1 L	SAE 5W40	API SM
REC21363430	21363430	5 L		

VOLVO PENTA



REC21363429



REC21363430

VDS-3. MINERAL

VDS-3 cubre los requisitos más estrictos sobre la limpieza del pistón en comparación con VDS-2, lo que garantiza la durabilidad y fiabilidad de los motores. La alta calidad del aceite VDS-3 permite en ciertos casos un aumento en los intervalos de drenaje. Para motores diesel y de gasolina (ver manuales de los operadores).

VDS-3 covers even more stringent requirements on piston cleanliness and bore polish compared to VDS-2, ensuring the durability and reliability of the engines. The high quality of VDS-3 oil allows in certain cases an increase in drain intervals. Fits both diesel and gas engines (check operators manuals).

VDS-3 copre requisiti ancora più stringenti sulla pulizia del pistone e sulla lucidatura del foro rispetto a VDS-2, garantendo la durata e l'affidabilità dei motori. L'alta qualità dell'olio VDS-3 consente in certi casi un aumento degli intervalli di scarico. Adatto sia ai motori diesel che a quelli a gas (consultare i manuali degli operatori).

Le VDS-3 répond aux exigences les plus strictes en matière de propreté des pistons que le VDS-2, ce qui garantit la durabilité et la fiabilité des moteurs. La haute qualité de l'huile VDS-3 permet dans certains cas d'augmenter les intervalles entre les vidanges. Pour les moteurs diesel et essence (voir les manuels d'utilisation).

REF	OEM		VISCOSIDAD VISCOSITY VISCOSITÀ VISCOSITÉ	GRADO GRADE GRADE GRADE
REC22479638	22479638	1 L	SAE 15W40	Mineral oil VDS-3 API CI-4 ACEA E5
REC22479642	22479642	5 L		

VOLVO PENTA





ATF-OIL, TYPE DEXRON III

Protege contra el desgaste, incluso a altas temperaturas. También proporciona muy buena protección contra la corrosión.
NO DEBE USARSE DONDE SE RECOMIENDA API-GL5

Protects against wear, even at high temperatures. Also provides a very good corrosion protection.
MUST NOT BE USED WHERE API-GL5 IS RECOMMENDED

Protegge dall'usura, sempre ad alte temperature. Fornisce anche un'ottima protezione contro la corrosione.
NON DEVE ESSERE UTILIZZATO DOVE VIENE RACCOMANDATO API-GL5

Protège contre l'usure, même à haute température. Elle offre également une très bonne protection contre la corrosion.
NE DOIT PAS ÊTRE UTILISÉ LÀ OÙ L'API-GL5 EST RECOMMANDÉ.

REF	OEM	
REC85122800	85122800	1 L
REC1161995	1161995	5 L

VOLVO PENTA



REC85122800



ATF-oil Type Dexron III
REC1161995

SYNTHETIC MARINE TRANSMISSION OIL

Aceite de transmisión marina de alto rendimiento diseñado para proporcionar la máxima protección para las colas Volvo Penta IPS y Aquamatic. Específicamente formulado para ofrecer un excelente rendimiento bajo cargas y temperaturas extremas a la vez que proporciona propiedades de fricción equilibradas entre agarre y deslizamiento y máxima protección contra el desgaste y la corrosión. La tecnología avanzada de los aditivos incluye una capacidad única para minimizar el daño debido a la contaminación del agua.
Todo esto asegura ventajas significativas sobre los aceites de transmisión convencionales y contribuye a un funcionamiento suave y de alto rendimiento y a la salud a largo plazo de la cola.

High performance marine transmission oil designed to provide maximun protection for Volvo Penta IPS and Aquamatic sterndrives. Specifically formulated to offer excellent performance under extreme loads and tempertaures while providing balanced frictional properties between grip and slip and maximum protection against wear and corrosion. Advanced additive technology include unique capability to minimize damage due to water contamination.
All this ensure significant advantages over conventional transmission oils and contributes to high-performance, smooth operation and longterm health of the drive.

Olio per trasmissioni marine ad alte prestazioni progettato per fornire la massima protezione per Volvo Penta IPS e entrofuoribordo Aquamatic. Specificamente formulato per offrire prestazioni eccellenti in presenza di carichi e temperature estreme, fornendo al tempo stesso proprietà di attrito bilanciate tra aderenza e scivolamento e massima protezione contro l'usura e la corrosione. La tecnologia additiva avanzata include la capacità unica di minimizzare i danni dovuti alla contaminazione dell'acqua.
Tutto ciò garantisce vantaggi significativi rispetto agli oli di trasmissione convenzionali e contribuisce a garantire prestazioni elevate, funzionamento regolare e integrità a lungo termine del piede.

Huile de transmission marine haute performance conçue pour offrir une protection maximale aux embases Volvo Penta IPS et Aquamatic. Spécifiquement formulé pour offrir d'excellentes performances sous des charges et des températures extrêmes tout en offrant des propriétés de friction équilibrées entre adhérence et glissement et une protection maximale contre l'usure et la corrosion. La technologie avancée des additifs comprend une capacité unique à minimiser les dommages dus à la contamination par l'eau.
Tout ceci assure des avantages significatifs par rapport aux huiles de transmission conventionnelles et contribue à un fonctionnement souple et performant ainsi qu'à la santé de l'embase à long terme.

IPS, Aquamatic

REF	OEM		VISCOSIDAD VISCOSITY VISCOSITÀ VISCOSITE
REC22479650	22479650	1 L	SAE 75W-90
REC22479648	22479648	5 L	

DHP (ratio 1.59:1 (D6-400) DPG (KAD300)

REF	OEM		VISCOSIDAD VISCOSITY VISCOSITÀ VISCOSITE
REC22574246	22574246	5 L	SAE 75W-140



REC22479650 REC22479648 REC22574246

NEUTRA-SALT

Disuelve la sal de los depósitos. Previene el óxido y la corrosión (incluye un inhibidor de corrosión que deja una capa protectora en todas las superficies metálicas).

Dissolves salt and salt deposits. Prevents rust and corrosion (includes a corrosion inhibitor which leaves a protective coating on all metal surfaces).

Scioglie il sale dei depositi. Previene ruggine e corrosione (include un inibitore di corrosione che lascia uno strato protettivo su tutte le superfici metalliche).

Dissout le sel et ses dépôts. Prévient la rouille et la corrosion (comprend un inhibiteur de corrosion qui laisse une couche protectrice sur toutes les surfaces métalliques).

REF	OEM	
REC21687793	21687793 41103103	0.95 L
REC21687796	21687796 41103102	3.8 L



REC21687793 REC21687796

COMPRESSOR OIL

Especialmente probado en compresores Volvo Penta. Completamente sintético, resiste temperaturas altas y bajas. Protege el compresor contra la corrosión.

Specially tested in Volvo Penta compressors. Fully synthetic oil that withstands both high and low temperatures. Protects compresssor against corrosion.

Testati appositamente con i compressori Volvo Penta. Olio completamente sintetico che resiste alle alte e alle basse temperature. Protegge il compressore dalla corrosione.

Spécialement testé dans les compresseurs Volvo Penta. Entièrement synthétique, résiste aux températures élevées et basses. Protège le compresseur contre la corrosion.

REF	OEM		VISCOSIDAD VISCOSITY VISCOSITÀ VISCOSITE
RM85108974	85108974	250 ml	ISO VG 68



REF --> OEM

REF	OEM	
A		
AM603905		408
AM603910		408
AM603915		408
AM603920		408
AM603930		408
AMITA 3 PLUS		586
AMITA3		586
B		
BAOMC-1-3858850P		511
BAOMC-20-3862603	3851227	522
BAOMC-20-3862603	3856617	522
BAOMC-20-3862603	3856662	522
BAOMC-20-3862603	3857684	522
BAOMC-20-3862603	3857798	522
BAOMC-20-3862603	3857810	522
BAOMC-20-3862603	3863071	511-522
BAOMC1-3852347	3852347	516-521
BAOMC20-910380	3850799	511-522
BAOMC29-910303	3854254	435
BRA125-1/2x1/2		370
BRA125-1/2x3/4		370
BRA125-1/2x3/8		370
BRA125-1/4x1/2		370
BRA125-1/4X3/8		370
BRA125-1x3/4		370
BRA125-3/16x1/4		370
BRA125-3/4x3/4		370
BRA125-3/8x1/2		370
BRA125-3/8x3/8		370
BRA125-5/16x3/8		370
BRA125-5/8x3/4		370
BRA125-5/8x3/8		370
BS2141	841178	408
BS2142	3854164	408
BS2143	3854186	408
BS5138		408
BS5139		408
BS5140		408
BS5141		408
BS5142		408
BS5143		408
BS5291		408
BS5292		408
BS5293		408
BS5294		408
BS5295		408
BS5296		408
BS5297		408
BS5298		408
BS5299		408
BVA0990730A	854766	589
BVA0990740A	854767	589
BVA0990750A	854768	589
BVA0990760A	854769	589
BVA0990770A	854770	589
BVB0990630A	854816	589
BVB0990640A	854817	589
BVB0990650A	854818	589
BVB0990660A	854819	589
BVB0990670A	854820	589
C		
CARP74021		375
CEF500100GX	875807	441
CEF500100GX	876689	441
CEF500100GX	3586494	441-448
CEF500100GX		449
CEF500103T	3854286	441-442
CEF500104	876120	347-440-442
CEF500105T	2170344	448-449
CEF500106GT	3841697	449
CEF500106GT	21951356	449
CEF500106GT		449
CEF500107T	21213660	442-449
CEF500114T	3588475	353-448-449
CEF500116GX	3593656	448
CEF500116GX	22222936	448
CEF500116GX	35993659	441
CEF500116GX		442-449
CEF500120T	835874	441
CEF500121GX	21951342	448-449
CEF500124	13554-0001	441
CEF500135	8777066	449
CEF500135	21951362	449
CEF500145T	875697	449
CEF500145T	875814	449
CEF500145T	21951364	449
CEF500162G	3887761	449
CEF500162G	21951358	449
CEF500162G		449
CEF500163G	3830459	448
CEF500170CG	875575	441-442-448-449
CEF500177GT	3593573	448
CEF500177GT	21730348	448
CEF500177GT		449
CEF500178G	21213664	353-441-442-448-449
CEF500207	21213660	448
CEF500380	3555413	448
CEF500505FL	876633	582
CEF500505K	875848	582
CEF500505K	876631	577-582
CEF500510K	875826	582-583
CEF500510K	876294	582-583
CEF500510K	897889	582-583
CEF500514K	3841481	582
CEF500514K	3854127	582
CEF500514K		578
CEF500528	3850426	578-582
CEF500530	858729	528
CEF500530	858955	528
CEF500530		524
CEF500531	860396	528
CEF500536K	3888916	355-582
CEF500537K	3594509	582
CEF500537K	3808898	582
CEF500537K		355
CEF500538K	3588753	354-582
CEF500538K	3808536	582
CEF500538K	3862168	582
CEF500538K		355
CEF501001	854932	576
CEF501001	22303438	535-576
CEF501011	875822	583
CEF501011	22303438	583
CHAP8Y		410
CHAPROSU		411
CHARD16		410
CHARJ12YC		410
CHARL82C		410
CHARL82YC		410
CHARL86C		410
CHARN7YC		410
CHARN9YC		410
CHARS12PYP		410
CHARS12YC		410
CHARS15LYC		410
CHARS9YC		410
CHARV15YC4		347-410
CHARV9YC		410
CHAV63C		410
CM21718129	21718129	567
CM21718129	21868042	567
CM21718129A		567
CM22651246	22651246	565
CM22651246	23615636	565
CM280DPKITA		568
CM280DPKITM		568
CM280KITA		568
CM280KITM		568
CM290DPKITA		567
CM290DPKITM		567
CM290KITA		568
CM290KITM		568
CM3588745	3588745	565
CM3588745A	3588745	565
CM3588746	3588746	566
CM3588746A	3588746	566
CM3593881	3593981	534-557-567
CM3593881A	3593981	567
CM3841427	3888816	566
CM3841427	3888817	566
CM3841427A	3888816	566
CM3841427A	3888817	566
CM3852970	3852970	566
CM3852970A	3852970	566
CM3854130	3854130	566
CM3854130A	3854130	566
CM3855411	3855411	566
CM3855411A	3855411	566
CM3858399	3858399	567
CM3858399A	3858399	567
CM3861634	3861634	537-566
CM3861634A	3861634	537-566
CM3861636	3861636	566
CM3861636A	3861636	566
CM3883728	3888813	566
CM3883728A	3888813	566
CM3888305	3888305	565
CM3888305A	3888305	565
CM40005206	40005206	567
CM40005206A	40005206	567
CM40005875	40005875	567
CM40005875A	23172856	557
CM40005875A	40005875	567
CM41100098	41100098	567
CM41100276	41100276	567
CM41100276P	41100276	567
CM823661	823661	567
CM823661A	823661	567
CM828140	873413	567
CM832598	832598	565
CM832598A	832598	565
CM832934	832934	566
CM838929	838929	567
CM838929A	838929	567
CM851983	876286	565
CM851983A	876286	565
CM852018	852018	566
CM852018A	852018	566
CM852019	8520219	566
CM852835	852835	565
CM852835A	852835	565
CM855105	855105	566
CM872139	872139	557-566
CM872139A	872139	557-566
CM872793	872793	566
CM872793A	872793	566
CM873395	873395	566
CM873395A	873395	566
CM873412	873412	567
CM875812	875812	565
CM875812A	875812	565
CM875821	875821	565
CM875821A	875821	565
CM876638	876638	557-566
CMCMV-18	875815	546-557-565
CMCMV-18A	875815	546-557-565
CMDPHKITA		568
CMDPHKITM		568
CMSXAKITA		568
CMSXAKITM		568
CMV-15	875810	557-565
CMV-16	875809	565
CMV-17	875805	546-565
CMV-17A	875805	565
D		
DAY17305	958481	469
F		
FEL17049		478
FEL17060		472-476
FEL17124		475
FEL17145		478-479
FEL17160		472
FEL17161		472
FEL17165		476
FEL17166		476
FEL17205		477
FEL17260		472-476
FEL17261		472-476
FEL17360		472-476
FEL17725		474-475
FEL17945		473-477
FEL17946		473-477
FEL17983		474-475
FEL17985	856889	478
FEL17986	3853510	478-479
FEL17995		473
FEL17996		476
FEL17997		473
FEL17998		476
G		
GDY15295	978457	468
GDY15335	966958	351-469
GDY15382	3852348	468
GDY15386	966870	352-469
GDY15545	966929	349-468
GDY17291	967158	467
GDY17291	9671587	469
GDY17291		346
GS11152	856659	396
GS30430		370
GS30431		370
GS30432		370
GS30433		370
GS31055		357-370
GS31056		357-370
GS31065		357
GS31066	22-89771Q2	357-370
GS31067		357
GS31157		357
GS35031		371
GS35032		371
GS35049		370
GS35050		370
GS35051		370
GS35052		370
GS35053		370
GS35054		370
GS35055		370
GS38103		584
GS38104		584
GS38320	3852604	511-5213-515-516-517
GS38322	3863443	513-515-516-517
GS90003		353
GS90005		353
GS90007		353
GS90012		353
GS90019		353
GS90029		353
GS90034		353
GS90090		353
GS90092		353
H		
HGE35908		512
HGE4532	824532	483-510-521
HGE5528	845528	524-527
HGE5599	825598	522
HGE5599	825599	510-522
HGE6894	841676	521
HGE6894	856137	521
HGE6894	856894	512-521
HGE7037	855380	522
HGE7037	856895	522
HGE7037	857037	512-522
HGE8870	3854045	520
HGE8870	3857450	520
HGE8870	3858870	511-520
HGE8870	3858871	520
HOT20930	834438	520

REF	OEM	
HOT20930	855387	510-520
HOT20930-MK		510
HOT20931	835804	521
HOT20931	855926	521
HOT20931	856883	514-521
HOT20931-MK		514
HOT20935	855384	523
HOT20935	856891	514-523
HOT20935-MK		514
HR TITAN 3 PROP		586
J		
JAB17018-0001	3593573	448
JAB17018-0001	21730348	448
JAB17018-0001		353-447-449
JAB17937-0001-P	3588475	446-448-449
JAB17938-0001-P	3830459	442-447-448
JOH09-1026B	3593656	448
JOH09-1026B	22222936	448
JOH09-1026B	35993659	441
JOH09-1026B		346-352-353-442-449
JOH09-1027B	21213660	442-448
JOH09-1027B		346-347-348-349-352-353-440
JOH09-1027B		347-348-349-352353-440-442-443-445-449
JOH09-1028B	3841697	449
JOH09-1028B	21951356	449
JOH09-1028B		349-350-351-353-443-449
JOH09-1029B	2170344	350-448-449
JOH09-801B	875575	346-349-441-442-448-449
JOH09-806B	875807	441
JOH09-806B	876689	441
JOH09-806B	3586494	441-448
JOH09-806B		349-352-449
JOH09-808B	21951342	349-352-448-449
JOH09-812B	13554-0001	347-348-441-445
JOH09-814B	875697	449
JOH09-814B	875814	449
JOH09-814B	21951364	449
JOH09-819B	8777066	449
JOH09-819B	21951362	449
JOH09-819B		350-351-352
JOH09-821B	3887761	449
JOH09-821B	21951358	449
JOH09-821B		350-353-449
JOH10-24061-3	842843	444
JOH10-24130-3	838522	443
JOH10-24130-3	844971	443
JOH10-24268-4	858150	443
JOH10-24277-3	858469	444
JOH10-24707-01	840557	443
JOH10-24707-01	861009	443
JOH10-24707-01		452
JOH10-32058-1	831178	439-452
JOH10-32621-2	828026	439
JOH10-32621-2	855517	439
JOH10-32621-2	855578	439
JOH10-35098-3	829895	441-443
JOH10-35157-1	807368	443
JOH10-35157-1	833415	443
JOH10-35157-1	833883	443
JOH10-35157-1	840076	443
JOH10-35157-1	858065	443
JOH10-35157-1		452
JOH10-35157-3	807368	443
JOH10-35157-3	833415	443
JOH10-35157-3	833522	443
JOH10-35157-3	833883	443
JOH10-35157-3		452
L		
LENS3213	35-809097	357
LENS3227	35-886638	357
LENS3240		357
LUB11363		353
LUB11404		353
M		
MAR037	855380	522
MAR037	856895	522
MAR037	857037	512-522
MAR061	3854466	523
MAR061	3855270	523
MAR061	3856444	523
MAR061	3857402	523
MAR061	3861842	523
MAR061	3862198	523
MAR061	3863061	513-515-516-517-523
MAR061-MK		513-515-517
MAR261INOX	845261	526-527
MAR289	860656	524
MAR289	861289	524-527
MAR289INOX	860656	526
MAR289INOX	861289	526
MAR289INOX	861289	527
MAR345	859865	525
MAR345	861574	525
MAR345	3589544	525
MAR345	21424345	525-526-527
MAR499	3847499	513-521

REF	OEM	
MAR499	3852338	521
MAR499	3857656	521
MAR499	3857678	521
MAR501	3847501	515-521
MAR501	3852374	521
MAR501	3857723	521
MAR501-MK		515
MAR512	358251	527
MAR512	861413	525-527
MAR512	3582512	525
MAR512		526
MAR583	833583	525-527
MAR627	3862627	513-525-517-523
MAR627	3862904	523
MAR684	3588683	522
MAR684	3588684	511-522
MAR690	840690	524-527
MAR701INOX	3583856	526
MAR701INOX	3884701	526-527
MAR847INOX	3583902	526
MAR847INOX	21700014	526
MAR847INOX	22671214	526
MAR847INOX	22948847	526-527
MAR870	3854045	520
MAR870	3857450	520
MAR870	3858870	511-520
MAR870	3858871	520
MAR870-MK		511
MAR894	841676	521
MAR894	856137	521
MAR894	856894	512-521
MAR894-MK		512
MAR906	861906	524-527
MAR906	21190094	524
MAR930	840930	525-527
MAR963	859963	524-527
MAR963INOX	859963	526-527
MAR964	3889964	513-515-517-523
MAR964	3889965	523
MP0180-001	10-812509184	393-394
MP425024	3855805	518
MP425036	3855806	518
MP425113	3854100	518
MP426422	2850245	379
MP426422	3854346	379
MP426422	3858331	379
MP426422	3859066	379
MP426422	21610334	379
MP426574	3855279	379
MP426766	3855957	379
N		
NEW SATURN		586
NGKBP7HS		346-411
NGKBPR6EFS		347-348-411
NGKBPR6EIX		411
NGKBPR6ES		346-411
NGKBPR6FS		411
NGKBPR7EIX		411
NGKBPR7ES		346-411
NGKBR6FIX		347-411
NGKBR6FS		411
NGKBR6FS		346-347
NGKIZTR5B11		348
NGKTR5		411
NGKTR55		411
NGKTR55IX		411
NGKTR5IX		411
NGKTR6IX		411
NGKUR4		411
NGKUR4IX		411
NGKUR5		411
NGKUR6		346-411
NGKUR6IX		411
NGKUR6IX		347-348
NGKXR5		411
NGKYR5		346
NGKYR5		411
NGKYR5IX		411
P		
PRE3300C05	21633476	531
PRE3300C06	21633477	531
PRE3300C07	21633478	531
PRE3300C08	21633479	531
PRE3300C09	21633480	531
PRE3300C10	21633481	531
PRE3300C11	21633482	531
PRE3300C12	21633483	531
PRE3300C13	21633484	531
PRE3300C14	21633485	531
PRE3300C15	21633486	531
PRE3300C16	21633487	531
PRE3300C17	21633488	531
PRE3300C18	21633489	531
PRE3300C19	21633490	531
PRE3300C20	21633491	531
PRE3300C21	21633492	531
PRE3300C22	21633493	531
PRE3300C23	21633494	531
PRE3300C24	21633495	531
PRE3300C25	21633496	531
PRE3300C26	21633497	531
PRE3300C27	21633498	531
PRE3300C28	21633499	531

REF	OEM	
PRE3300C29	21633500	531
PRE3300C30	21633501	531
PRE3300C31	21633502	531
PRE3300C32	21633503	531
PRE3300C33	21633504	531
PRE3300C34	21633505	531
PRE3300C35	21633506	531
PRE3300C36	21633507	531
PRE3300C38	21633509	531
PRE3300C40	21633511	531
PRE3300C42	21633513	531
PRE3300C44	21633515	531
PRE3300C46	21633517	531
PRE3300C48	21633519	531
PRE3300C50	21633521	531
PS111044		353
R		
RAC1/2F-1/2M		370
RAC1/2X16		370
RAC1/2X18		370
RAC1/2X20		370
RAC1000MA30		362
RAC1000VMA		362
RAC120AS		363
RAC120R-RAC-01		357
RAC2010PM-OR		362
RAC2010SM-OR		362
RAC2010TM-OR		362-364
RAC2020PM-OR		362
RAC2020SM-OR		362
RAC2020TM-OR		362
RAC2040PM-OR		362
RAC2040SM-OR		362
RAC2040TM-OR		362
RAC230R2		363
RAC245R2		363
RAC3/8F-3/8M		370
RAC3/8X10		370
RAC3/8X12		370
RAC3/8X14		370
RAC320R-INOX-01		357
RAC320R-RAC-01		357
RAC320R-RAC-02		357
RAC460R2		363
RAC490R2		363
RAC500MA30		362
RAC75/1000MA30		362
RAC75/500MAX		362
RAC900MA30		362
RAC900VMA		362
RACPFF5510		356
RACR11T		363
RACR12		364
RACR120P		363
RACR120SM		363
RACR120TM		363
RACR12P		363
RACR12S		363
RACR12T		363
RACR20P		363
RACR20S		363
RACR20T		363
RACR24P		363
RACR24S		363
RACR24T		363
RACR25P		363
RACR25S		363
RACR25T		363
RACR26P		363
RACR26S		363
RACR26T		363
RACR60P		363
RACR60S		363
RACR60T		363
RACR90P		363
RACR90S		363
RACR90T		363
RACRK19492UL		371
RACRK20726		371
RACRK22628		371
RACS3213	35-809097	357
RACS3214	35-809099	357
RACS3220UL		357
RACS3227	35-886638	357
RACS3228UL	857633	357-358
RACS3240		357
REC0307239	3852071	426
REC062MINORKIT		446-456
REC0987883	3854194	393-406
REC10-37612	3853155	516
REC10-37612	3855983	516-517
REC10-861788	10-861788	393-394
REC10615K	835874	441
REC1066823		467
REC11-859135	3852648	403-543-544-578-579
REC11043	11043	539
REC11044	11044	547-549-551
REC11065	11065	539
REC11072	11072	546-547
REC11096	11096	539
REC1140639		364
REC1161995	1161995	591
REC11994	11994	378-422

REF	OEM	
REC11994	18839	422
REC11994	110386	422
REC11994	233033	422
REC11994	243621	422
REC11994	859851	422
REC11994	859853	422
REC11994	861835	422
REC11994	3580629	422
REC11994	6603088	422
REC11994	6604939	422
REC120		364
REC121152		490
REC121153		490
REC121154		490
REC1218630	418423	518
REC1218630	1218630	519
REC124240-01883	862583	452
REC125017	125017	355-545-555-556-573
REC12532	841244	415
REC126870	3852020	548-571
REC1275379	940096	378
REC1275379	1275379	378
REC1275379		509
REC1276425	1276425	498
REC127695-35150	423135	367
REC127695-35150	4785974	367
REC127695-35150		350-351-352
REC128670	128670	571
REC13-35048	3852002	513-515-516-517
REC1302		377
REC13037		406
REC1306169	1306169	413
REC1306341	1306341	508
REC1306630	1306630	507-509-518
REC1317761	1317761	508
REC1317761	1326239	508
REC1317792	1317792	518
REC1317793	1317793	518
REC1324492	1324492	407
REC1324750	1324750	389
REC1336385	1336385	390
REC1336763	1336763	508
REC13554-0001	13554-0001	441
REC1359649	1359649	531
REC1359649	22297931	531
REC1359649	22797782	531
REC1378491	1376344	435
REC1378491	1378491	435
REC1378492	463829	482
REC1378492	1378492	482
REC1378493	463359	481
REC1378493	1276817	481
REC1378493	1378493	481
REC1378645	463412	480
REC1378645	31378645	480
REC1378646	1326785	480
REC1378646	1332644	480
REC1378646	1378646	480
REC1378853	1378853	482
REC1378854	1378854	482
REC1378864	418262	483
REC1378864	463587	483
REC1378864	1378864	483
REC1378870	1336753	482
REC1378870	1378870	482
REC1378879	463225	482
REC1378879	1266796	482
REC1378879	1378879	482-510
REC1378909	1378909	482
REC1378911	418870	483
REC1378911	1378911	483
REC1378913	461092	482-512
REC1378913	1378913	482
REC1378914	461113	483
REC1378914	1378914	483
REC1396-4656	3854106	382-383
REC1396-5238	3854107	382-379-383
REC1397-3327		381-383
REC13980	3850802	511
REC1463-9382	835998	409
REC15-404	875571	412
REC15-405	3888324	412-416-420
REC15-601	3888325	412-416-429
REC15-604	3857166	412
REC15-606	3888327	412-417-421
REC15-801	3857166	412
REC15-804	3888326	412-417-420
REC15-806	3857166	412
REC15-808	3861295	412
REC15-815	3888328	412-418-421
REC1504952	1504952	406-407
REC1504952	3858809	407
REC1542052	1542052	492
REC1542123	1542123	493
REC1542123	1542177	493
REC1542157	1542157	378
REC1542158	1542158	378
REC1542159	18671	378
REC1542159	1542159	378
REC1542187	1542187	422-426
REC1542318	1542318	498
REC1542389	1542389	509-518
REC1542472	1542472	509-518

REF	OEM	
REC1544119	1544119	491-509
REC1545198	1545198	509-518-519-520
REC16-70236	3853373	511
REC160ELEMENT		364
REC1660609	181670	437
REC1660609	1660609	437
REC1674083	463828	451
REC1674083	1357775	451
REC1674083	1674083	451
REC1674083	1674084	451
REC1674083	3850064	451
REC1676432	421174	437
REC1676432	1545283	437
REC1676432	1665527	437
REC1676432	1674032	437
REC1676432	1676432	437
REC1676432	15442883	437
REC17000		470
REC17010		471
REC17020	3853380	473
REC17030	3853380	474
REC17040	856575	477
REC17042	3853511	477
REC17048	3853587	478
REC17102		470
REC17116		471
REC17120		473-475
REC17125		473-475
REC17140		477
REC17146		478-479
REC17200		470
REC17207		479
REC17210		471
REC17211		471
REC17214		474
REC17220		473
REC17224		473
REC17230		474
REC17232		475
REC17240		477
REC17242		477
REC17243		477
REC17248		479
REC17253	17253	555-556
REC17276	17276	355-539-555-556
REC17310		471
REC17320	856365	473-475
REC17340	856616	478-518
REC17341		478-479
REC17342		479
REC1766160		364
REC17900		471
REC17903		471
REC17920		472
REC17921		472
REC17930	835096	474-476
REC17931	3852687	474-476
REC17935	856626	478-479
REC17937	3853513	478-479
REC17937-0001	3588475	448-449
REC17971		472
REC17980	855729	474-475
REC17981		474-475
REC17982	3856138	474-475
REC18-5295		419
REC18-8114		380
REC18-8115		380
REC181538	181538	437
REC181620	181620	555
REC181717	181717	451
REC181804	181804	539
REC183247	183247	540-541-543-544-545
REC183247	3850853	537
REC183272	183272	537-547-549-551-552-554
REC183374	183374	546-547
REC183390	183390	546
REC183390	184642	539
REC183391	183391	555
REC183765	183765	539
REC183859	183859	537-547-549
REC183859	183859	551-552
REC183859	183959	554
REC183861	183861	451
REC184654	184654	539-547-549-551-552-554
REC184682	184682	547-549-551
REC184683	184683	537-551-552-554
REC184683	184683	547-549
REC184765	184765	537-547-549-551-552
REC184778	184778	539
REC18525A1	854531	399
REC18777-0001		442
REC18818	18818	378
REC19029		575
REC19035		571
REC19037	876266 +876268	572
REC19088		402
REC191844	191844	577
REC192212	192212	508
REC192212	463904	508

REF	OEM	
REC19876		401
REC20450736	20450736	425
REC20513285	20513285	519
REC20707685	860105	494
REC20707685	20707685	494
REC20739057	20739057	519
REC207MINORKIT		455
REC207MINORKIT		457
REC207MINORKIT		457
REC207MINORKIT		447-457
REC21112496	21112496	535-572
REC21112497	21112497	535-572
REC21124849	21124849	388-472
REC21132189	3584126	373
REC21132189	21132189	373
REC21132390	3861034	347-348-466-468
REC21132392		347-466
REC21134777	833323	373
REC21134777	21134777	373
REC21139810	21139810	360
REC21141637	3593656	445
REC21141637	3884694	445
REC21141637	21141637	445
REC21160912	21160912	469
REC21165389	3581868	486
REC21165389	21165389	486
REC21165390	3581869	486
REC21165390	21165390	486
REC21171277	3881586	366
REC21171277	3886591	366
REC21171277	3889484	366
REC21171277	21171277	366
REC21171277		353
REC21192875	1665251	369
REC21192875	20532237	369
REC21192875	21192875	369
REC21192973	3840843	486
REC21192973	21192973	486
REC21192974	3889517	486
REC21192974	21192974	486
REC21196919	3885441	365
REC21196919	21196919	365
REC21212799	3812519	440
REC21212799	21212799	440
REC21212800	3812518	441
REC21212800	21212800	441
REC21213660	21213660	439-440-442-448-448
REC21213664	21213664	439-440-441-442-448-449
REC21214599	3812693	439
REC21214599	3857202	439
REC21214599	3862482	439
REC21214599	21214599	439
REC21214599		450
REC21214601	3812695	440
REC21214601	3860795	440
REC21214601	3862484	440
REC21214601	21214601	440
REC21214601		450
REC21219723	21219723	447-456
REC21250645	3808796	389
REC21250645	21250645	389
REC21256410	3843471	584
REC21256410	3889982	584
REC21256410	21256410	544-584
REC21280913	3809465	465
REC21280913	3848896	465
REC21280913	3883786	465
REC21280913	21172053	465
REC21280913	21280913	465
REC21302969	21302969	394
REC21310068	21310068	519
REC21323043	3583555	394
REC21323043	3801351	394
REC21323043	3803929	394
REC21323043	21323043	394
REC21325767	865013	525
REC21325767	3807212	525
REC21325767	3838942	525
REC21325767	3884701	527
REC21325767	21325767	525
REC21325767		527
REC21351717	21274700	377
REC21351717	21351717	377
REC21351717	85113732	377
REC21351717	85116162	377
REC21363429	21363429	591
REC21363430	21363430	591
REC21368879	21368879	369
REC21371111	3588433	489
REC21371111	21371111	489
REC21371111		486
REC21371112	3588432	488
REC21371112	21371112	488
REC21379102	21106041	445
REC21379102	21379102	445
REC21379288	21141341	365
REC21379288	21379288	365
REC21379288		353
REC21380886	3819485	447
REC21380886	3836314	447
REC21380886	21380886	447
REC21380886		456

REF	OEM	
REC21380890	3584063	446
REC21380890	3589907	446
REC21380890	21380890	446
REC21380890		456
REC21400091	873765	407
REC21400091	11305263	407
REC21400091	21400091	407
REC21403633	21403633	348-558-559
REC21405493	21405493	469
REC21407028		467
REC21412639	21412639	425
REC21419374	21419374	446-456
REC21419376	21419376	446-456
REC21423488	874501	395
REC21423488	3588491	395
REC21423488	3801296	395
REC21423488	3803648	395
REC21423488	3803855	395
REC21423488	3803938	395
REC21423488	3804296	395
REC21423488	21423488	395
REC21426987	20513343	392
REC21426987	21426987	392
REC21436799	21436799	409
REC21450768	3583915	526
REC21450768	3819016	526
REC21450768	21450768	526-527
REC21457172	3582986	430
REC21457172	3583338	430
REC21457172	3809070	430
REC21457172	3809071	430
REC21457172	3889148	430
REC21457172	21457172	430
REC21484383	3841840	400
REC21484383	21484383	400-579
REC21492771	466987	360
REC21492771	829993	360
REC21492771	3825133	360
REC21492771	21492771	360
REC21492771		349-350-351-353
REC21533394	854256	382
REC21533394	21533394	382
REC21533394		379-383
REC21585053	21585053	465
REC21608512	3594785	374
REC21608512	21397772	374
REC21608512	21545139	374
REC21608512	22608512	374
REC21608512	23386773	374
REC21608512	23794966	374
REC21622232	21622232	419-421
REC21632901	21632901	368
REC21632901	22030852	368
REC21632901		353
REC21646645	3582358	365
REC21646645	21646645	365
REC21646645	21782391	365
REC21646645		349-350-353
REC21655254	3587046	430
REC21655254	3594159	430
REC21655254	3594161	430
REC21655254	3809093	430
REC21655254	3809097	430
REC21655254	21610728	430
REC21655254	21655254	430
REC21662702	21662702	450
REC21687793	21687793	592
REC21687793	41103103	592
REC21687796	21687796	592
REC21687796	41103102	592
REC21702999	3583654	366
REC21702999	3818541	366
REC21702999	21702999	366
REC21702999		353
REC21707132	471392	368
REC21707132	477556	368
REC21707132	21707132	368
REC21707134	466634	367
REC21707134	21707134	367
REC21707134		351-352
REC21711728	21711728	503
REC21721548	3809559	405
REC21721548	21721548	405
REC21721550	3809560	405
REC21721550	21721550	405
REC21730344	2170344	448
REC21730344	8777066	449
REC21730344	21951362	449
REC21730344		447-449-454-455
REC21760		485-488
REC21761		485-488
REC21762		486-488
REC21763		486-489
REC21764		486-489
REC21765		486-489
REC21766		495-497
REC21840806	3857470	401
REC21840806	3888301	401
REC21840806	21840806	401
REC21840806		402
REC21849843	21849843	495
REC21868042	21868040	560
REC21868042AL	21868042	560
REC21880386	860631	430

REF	OEM	
REC21880386	21641712	430
REC21880386	21880386	430
REC21913334	21687472	367
REC21913334	21913334	367
REC21921545	21921545	501
REC21924262	854765	589
REC21924262	854814	589
REC21924262	2194262	589
REC21924263	854766	589
REC21924263	854815	589
REC21924263	21924263	589
REC21924264	854767	589
REC21924264	854816	589
REC21924264	21924264	589
REC21924265	854768	589
REC21924265	854817	589
REC21924265	21924265	589
REC21924266	854769	589
REC21924266	854818	589
REC21924266	21924266	589
REC21924267	854770	589
REC21924267	854819	589
REC21924267	21924267	589
REC21924268	854771	589
REC21924268	854820	589
REC21924268	21924268	589
REC21924269	854772	589
REC21924269	854821	589
REC21924269	21924269	589
REC21924270	854773	589
REC21924270	21924270	589
REC21945911	3884410	404
REC21945911	21945911	404
REC21951302	21951302	451
REC21951368	21951368	443-454
REC21951414	21951414	443-454
REC21951422	21951422	443-454
REC22-428611	3852135	513-515-516-517
REC22-67892A05	3854539	535-543-544-548-552-553
REC22-73379	3850740	513-515-516-517
REC22005		510
REC22008		460
REC22009		453
REC22011	876224	460
REC22012		459
REC22013		435
REC22014		434
REC22015		429
REC22016		454
REC22017		460
REC22019		460
REC22021		460
REC22022		432
REC22024		460
REC22025		460
REC22032		427
REC22033		427
REC22034		493
REC22037		429-459
REC22038		434
REC22039		435
REC22040		453
REC22042		453
REC22045		512
REC22047		453
REC22051		459
REC22053		453
REC22054		453
REC22055		580
REC22057		580
REC22059		580
REC22060		580
REC22061		459
REC22063494	22063494	447-456
REC22070		432
REC22072		453
REC22073		454
REC22074		580
REC22075		580
REC22077		427
REC22085		574
REC22086		546-573
REC22087		547-573
REC22089		454
REC22097		575
REC22103		429
REC22104		432
REC22105		428
REC22106		428
REC22107		428
REC22108		428
REC22109		428
REC22110		431
REC22111		431
REC22113		460
REC22114		460
REC22115		460
REC22116		460
REC22119		493
REC22120		493
REC22120-0001	876120	346-347-442
REC22121		493
REC22121309		401-402

REF	OEM	
REC22122		427
REC22123		427
REC22124		427
REC22125		438
REC22126		438
REC22127		432
REC22128		432
REC22134		494
REC22143		432
REC22145		512
REC22148		427
REC22149		432
REC22151		573-574
REC22152		432
REC22153		432
REC22154		431
REC22155		427
REC22156		427
REC22161		580
REC22163		580
REC22167		453
REC22169		402
REC22170		530
REC22171	3861556	530
REC22171036	3582692	465
REC22171036	3588305	465
REC22171036	3847481	465
REC22171036	3883784	465
REC22171036	21786692	465
REC22171036	22171036	465
REC22172		402
REC22185019	876527	502
REC22185019	877071	502
REC22185019	22185019	502-509
REC22185027	876851	502
REC22185027	3581714	502
REC22185027	3817034	502
REC22185027	22185027	502
REC22185027		509
REC22187385	3779955	401-402
REC22187385	3889955	401-402
REC22187386	3779955	401
REC22187386	3889955	401
REC22187386		402
REC22188	3850984	571
REC22189	3850984	571
REC22206133	420641	494
REC22206133	466393	494
REC22206133	22206133	494
REC22256171	3861068	581
REC22256171	22256171	534-581
REC22256171		534
REC22273952	3762385	584
REC22273952	3862385	539
REC22273952	22273952	539-584
REC22283751	22283751	469
REC22303438	854932	354-576
REC22303438	22303438	354-535-576
REC22314183	828726	400
REC22314183	873531	400
REC22314183	22314183	400-577
REC22336734	3852329	537
REC22336734	22336734	539-541-543-544-545-555-556
REC22352491	22352491	469
REC22377272	3888460	361
REC22377272	22377272	361
REC22389354	876261	502
REC22389354	876784	502
REC22389354	876819	502
REC22389354	876834	502
REC22389354	22389354	502
REC22389354		509
REC22393048	3580305	507-518
REC22393048	3580306	507
REC22393048	22393048	507-519
REC22430456	22430456	554
REC22452005	21745119	529
REC22452005	22452005	529
REC22452005		530
REC22479638	22479638	591
REC22479642	22479642	591
REC22479648	22479648	534-592
REC22479650	22479650	592
REC22574246	22574246	592
REC22582994	3586857	503
REC22582994	22582994	503
REC22612828	22612828	554-574
REC22637542	846762	407
REC22637542	860339	407
REC22637542	873740	407
REC22637542	22637542	407
REC22651246	3888305	535
REC22651246	22651246	560
REC22651246	22651246	557-559
REC22651246		558
REC22651246AL	3888305	535-557-558-559
REC22651246AL	22651246	560
REC22663814	21146097	529
REC22663814	21505553	529
REC22663814	22663814	529
REC22774756	3582694	465
REC22774756	3583665	465
REC22774756	21344508	465

REF	OEM	
REC22774756	22774756	465
REC22774756		467
REC22898644	22898644	590
REC22898645	22898645	590
REC22898646	22898646	590
REC22898647	22898647	590
REC22905150	3886848	447
REC22905150	22905150	447
REC22905150		457
REC22905155	3589104	447
REC22905155	22905155	447
REC22905155		457
REC22915955	22915955	501
REC22954700	22954700	469
REC23008		574
REC23009		572
REC23010		539-575
REC23011		426
REC23012		426
REC23013		426
REC23014		431
REC23015		427
REC23018		539-573
REC23019		575
REC23020	3888822	552-574
REC23022	3888821	553-574
REC23024		537-575
REC23025		537-574
REC23027		572
REC23033		573
REC23034		545-575
REC23035		445-454
REC23038		445-455
REC23048		426
REC23059414	23059414	436-437
REC23120		570
REC23164609AL	3888813	552-553-554-557-558-559
REC23164611AL	3888816	557-559-579
REC23164611AL	3888817	559
REC23164611AL	23164611	559
REC23164611AL		558
REC23170		555-570
REC23172849	876286	546-557
REC23172849	23172849	534
REC23172849	40005875	534
REC23172849		534-558-559
REC23172849AL	23172849	534-557-559
REC23172849AL	40005875	534
REC23172849AL		557-558
REC23478919	853583	590
REC23478969	853588	590
REC23553896	23553896	573
REC23557470	859111	494
REC23557470	3581570	494
REC23557470	3582676	494
REC23557470	22557470	494
REC238258	238258	412
REC2394207AL	3584442	561
REC23974207AL		561
REC241669	241669	412
REC243658	243658	412
REC243797	243797	413
REC243799	243799	413
REC243799		413
REC243903	243903	413
REC24942		356
REC24950		356
REC24952		356
REC25-30613		355
REC25-33145	3852044	578
REC25000		356
REC25010		356
REC25020		356
REC25030		356
REC26-14756		478-479
REC26-34217	3854956	507
REC26-34217	3854956	507
REC26-75988	3853521	507
REC26-8M0150312	3857648	507
REC26-8M0150312	3862362	507
REC2656613		364
REC26900		419
REC26901		419
REC26904		419
REC26905		419
REC2696		380
REC27-142471		472
REC27-33395	856034	474-514
REC27-33395	3852468	515
REC27-33395		475
REC27-33918	835417	426
REC27-33918	3852111	426-436
REC27-33956	3853342	434-435
REC27-34897	3852477	435-436
REC27-41609	27-41609	380
REC27-46820	3852472	517
REC27-46820	3852472	478-479
REC27-49110	3853361	435
REC27-56880	3852824	434-436
REC27-60715	27-60715	380
REC27-65577	27-65577	380
REC27-70142	27-70142	380
REC27-803192A2	24-803192A2	434

REF	OEM	
REC27-807473A1	3857662	474-475
REC27-8079821	841031	380
REC27-8146801	3852096	426-435
REC27-815528	3853256	471-511
REC27-99757	856116	512
REC27-99757	3853412	513
REC27-99757		471
REC270136	270136	500
REC270137	270137	500
REC270906	270906	500
REC270907	270907	500
REC271051	271051	500
REC271054	271054	500
REC271063	271063	500
REC271214	271214	500
REC271215	271215	500
REC271217	271217	500
REC271218	271218	500
REC271975	271975	433-435
REC271975	1275148	433
REC271975	3547560	433
REC272002	272002	499
REC272004	272004	499
REC272040	272040	499
REC272059	272059	499
REC275331	275331	500
REC275334	275334	499
REC275336	275336	499
REC275337	275337	500
REC275338	275338	500
REC275340	275340	499
REC275341	275341	499
REC275344	275344	499
REC275350	275350	503-509
REC275369	275369	500
REC275751	275595	501
REC275751	275751	501
REC275751	875651	501
REC275751		509
REC288MINORKIT		446-456
REC294005		420
REC296TWIN		364
REC30-879194A01	21752712	578
REC300-00879	3852217	409
REC30650525	30650525	486
REC30677767	30677767	434
REC30713459	30713459	490
REC30729340	30729340	492
REC30731261	30731261	486
REC30731262	30731262	486
REC30731263	30731263	486
REC30731264	30731264	486
REC30731809	30731809	353-467-469
REC30788490	30788490	368
REC309731	3852537	578
REC31-66668A1	3854249	535-537-548-549-551-552-553-554
REC31-86748A1	183512	551
REC31-86748A1	3854250	548-549-552-553-554
REC31-86748A1	6854250	537
REC31216308	31216308	387
REC31251252	30637961	465
REC31251252	30757056	465
REC31251252	31251252	465
REC31251252		467
REC31339213	31339213	498
REC31359568	30731772	464
REC31359568	31258305	464
REC31359568	31359568	464
REC31419556	30659131	397
REC31419556	30667118	397
REC31419556	31419556	397
REC31430317	30777600	491
REC31430317	31430317	491
REC3183211	3183211	519
REC3287677	3287677	409
REC3302-9031		381-383
REC331188	3852169	578
REC332583	3852523	578
REC35-06003	835440	359
REC35-06003	3852030	359
REC35-06003	3852412	359
REC35-06003		348
REC35-06003		346-347
REC35-06007	835779	359
REC35-53336	835576	358
REC35-802893Q		356
REC35-802893Q01		356
REC35-8M0046752		372
REC3501530	3501530	375
REC3514432	3514432	507
REC3517857	418432	359-366
REC3517857	430143	359-366
REC3517857	1266286	359-366
REC3517857	3517857	359-366
REC3517857		346-349
REC3517893	3517860	507-518
REC3545696	3545696	389
REC3580026	3580026	498
REC3580100	3580100	373
REC3580227	3580227	495
REC3580234	3580234	485

REF	OEM	
REC3580309	3580309	485
REC3580380	3580380	452
REC3580380	3580917	452
REC3580509	3580509	352-353-366
REC3580510	3580510	366
REC3580514	3580514	426
REC3580586	3580586	498
REC3580835	3580835	469
REC3581078		346-347-349-364
REC3581528	3581528	384
REC3581536	3581536	377-509
REC3581621	861474	366
REC3581621	861475	366
REC3581621	3581621	366
REC3581621	21549544	366
REC3581621		349
REC3581696	3581696	376
REC3581760	3581760	362-364
REC3581774	188486	395
REC3581774	3581774	395
REC3581774	8599252	395
REC3581774		406
REC3581889	3581889	519-520
REC3582310	860320	373
REC3582310	1542170	373
REC3582310	3582310	373
REC3582324	3582324	465-467
REC3582432	838628	486
REC3582432	858993	486
REC3582432	3582432	486
REC3582432		509
REC3582435	876103	488
REC3582435	876121	488
REC3582435	3582434	488
REC3582435	3582435	488
REC3582435		486
REC3582500	859844	373
REC3582500	3582458	373
REC3582500	3582500	373
REC3582561	419653	518-519
REC3582561	3582561	509-520
REC3582563	876108	494
REC3582563	876312	494
REC3582563	3582563	494
REC3582563		383-384
REC3582595	876398	494
REC3582595	3582595	494
REC3582595		383-384
REC3582596	875633	489
REC3582596	875662	489
REC3582596	876395	489
REC3582596	3582596	489
REC3582596		486
REC3582597	875031	488
REC3582597	876453	488
REC3582597	3582597	488
REC3582597		486
REC3582606	419652	518
REC3582606	3582606	520
REC3582608	1378960	518
REC3582608	3582608	520
REC3582609	463371	518
REC3582609	3582609	520
REC3582639	3582639	430
REC3582725	3582725	492
REC3582732	3582732	368
REC3582732	22030848	368
REC3582732		353
REC3582748	3582748	498
REC3582887	3582887	535
REC3582888	3582888	535
REC3583073	3583073	376
REC3583078	3583078	378
REC3583078	3887602	378
REC3583087	3583087	437-438
REC3583089	3583089	445
REC3583115	860629	444
REC3583115	860827	444
REC3583115	3581558	444
REC3583115	3583115	444
REC3583322	3583322	535
REC3583336	3583336	492
REC3583443	3583443	361
REC3583443	21718912	361
REC3583443		353
REC3583546	3583546	491
REC3583647	3583647	428
REC3583700	3583700	498
REC3583780	3583780	426
REC3583786	858992	486
REC3583786	876853	486
REC3583786	3580742	486
REC3583786	3582433	486
REC3583786	3583786	486
REC3583786		509
REC3583787	876104	489
REC3583787	876530	489
REC3583787	3582436	489
REC3583787	3583787	489
REC3583787		486
REC3583788	3582437	489
REC3583788	3583788	489
REC3583788		486
REC3583840	3583840	430

REF	OEM	
REC3583840	21219693	430
REC3583913	1542198	422-457
REC3583913	3583913	422-437-457
REC3584062	3584062	446-456
REC3584127	3584127	405
REC3584144	3584144	369
REC3584145	3584145	353-369
REC3584167	3584167	526-528
REC3584168	3584168	526-527-528
REC3584202	3580482	485
REC3584202	3584202	485
REC3584442	3584442	561
REC3586461AL	3586461	557-559
REC3586461AL	3854130	578
REC3586461AL		558
REC3586494	875807	441
REC3586494	876689	441
REC3586494	3586494	441-448
REC3586494		449-453
REC3586496	21951342	441-443-448-449-455
REC3586765	854346	398
REC3586765	3586765	398
REC3586765	3857265	398
REC3586765	3861027	398
REC3586960	3586960	498
REC3587071	3587071	396
REC3587079	3587079	398
REC3587079	3857079	398
REC3587079	3857489	398
REC3587079	3858069	398
REC3587079	3860879	398
REC3587508	828023	433
REC3587508	3587508	433-435
REC3587597	3587597	347-348-423
REC3588434	3588434	497
REC3588745	3588745	557
REC3588745	35888745	558-559
REC3588745AL	3588770	557-558-559
REC3588746	3588746	557
REC3588746	3888814	558-559
REC3588746AL	3588748	557
REC3588746AL	23164609	558-559
REC3588916	874109	391
REC3588916	3588916	391
REC3589322	3589322	486-488
REC3589522	3589522	543
REC3589524	3589524	543
REC3589875		559
REC3589875AL		559
REC3589876AL		559
REC3593573	3593573	448
REC3593573	21730348	448
REC3593573		446-449
REC3593654	3580064	445
REC3593654	3580900	445
REC3593654	3580944	445
REC3593654	3593654	445
REC3593655	3580222	445
REC3593655	3580223	445
REC3593655	3580910	445
REC3593655	3580920	445
REC3593655	3580945	445
REC3593655	3593655	445
REC3593659	3593656	448
REC3593659	22222936	448
REC3593659	35993659	441
REC3593659		442-445-449-453-454
REC3593663	3593663	535-576
REC3593951	3593951	531
REC3593981	3593981	559-558-560
REC3593981AL	3593981	557-558-559-560
REC3594989	3594989	400
REC3594989	3854842	400
REC3594989	3861837	400
REC3594989	3863129	400
REC374MINORKIT		446-456
REC376MINORKIT		446-456
REC3801138	3809911	386
REC3801173	38879363	385
REC3801270	3847392	385
REC3801271	3847393	385
REC3801387	21163289	385
REC3801387	21354008	385
REC3801404	3801404	437
REC3801404	3801636	437
REC3801404	30751022	437
REC3801404	31293668	437
REC3801404		434
REC3802092	3581150	384
REC3802105	3581755	384
REC3802125	3583006	384
REC3802149	3582768	385
REC3802150	3582769	385
REC3802151	3584053	386
REC3802152	3584138	386
REC3807400	3807400	560
REC3807400AL	3807400	560
REC3808228	3808228	578-579
REC3808602	3808602	485
REC3808616	3808616	361-391
REC3808797	3808797	389
REC3808898	3594509	354-582

REF	OEM	
REC3808898	3808898	539-582
REC3809167	840270	485
REC3809167	859136	485
REC3809167	860749	485
REC3809167	3809167	485
REC3809445	3809445	590
REC3809647	3809647	485
REC3809657	3809657	491
REC3809721	3809721	361
REC3809721	21140344	361
REC3812109	3812109	485
REC3812131	3812131	491
REC3812199	3812199	485
REC3812240	3812240	440-450
REC3812357	3812357	534-573
REC3817033	3817033	503-509
REC3817328	3817328	374
REC3817687	3817687	439-450
REC3817688	3817688	440-450
REC3817861	3586722	502
REC3817861	3817861	502
REC3817861		509
REC3818912	3818912	435
REC3819905	852939	408
REC3819905	853502	408
REC3819905	856355	408
REC3819905	3819905	408
REC38201	38201	515
REC38201	21114522	513-517
REC3825038	3825038	350-365
REC3827069	829161	366-368
REC3827069	829390	368
REC3827069	3827069	366-368
REC3827069	21549542	366-368
REC3827069		350-351
REC3827273	3827273	469
REC3827444	874385	394
REC3827444	3827444	394
REC3829311	846354	444
REC3829311	3829311	444
REC3829313	845189	444
REC3829313	866396	444
REC3829313	3829312	444
REC3829313	3829313	444
REC3831236	3831236	367
REC3831236	20821230	367
REC3831236	21640514	367
REC3831424	875849	422
REC3831424	876128	422
REC3831424	889425	422
REC3831424	3831424	422-424
REC3831424		349-350
REC3831425	3831425	349-350-351-352-424
REC3831426	824200	423
REC3831426	875788	423
REC3831426	3831426	423-424
REC3831426		347-348-349-350
REC3837935	863437	444
REC3837935	876809	444
REC3837935	3825493	444
REC3837935	3837935	444
REC3838207	865295	447
REC3838207	3838207	447
REC3838207		457
REC3838288	3838288	446-456
REC3839110	3839110	350-351-424
REC3840335	3588378	360
REC3840335	3840335	360
REC3840335	21624740	360
REC3840335		349-350
REC3840525	3589316	367
REC3840525	3840525	367
REC3840525		353
REC3840761	3840761	579
REC3840816	3840816	353-425
REC3840842	3840842	485
REC3840859	3840859	495
REC3840888	3803904	395
REC3840888	3840888	395
REC3841011	3841011	579
REC3841013	3841013	579
REC3841481	3841481	578
REC3841481	3841481	582
REC3841481	3854127	582
REC3841481	22197130	354
REC3841481		355
REC3841697	3841697	449
REC3841697	21951356	449
REC3841697		444-445-446-449-454-454
REC3842853	3842853	513-515-523
REC3843100	3587927	390
REC3843100	3843100	390
REC3843100	3884352	390
REC3843136	3843136	539
REC3843751	3843751	387
REC3843751	3857696	387
REC3843854	3843854	386
REC3847482	3847482	465
REC3847644	3847644	347-348-358-374
REC3848965	3801204	395
REC3848965	3848965	395
REC3848965	30782228	395

REF	OEM	
REC3849006	3849006	539
REC3850268	3850268	468
REC3850360	3850360	423-436
REC3850396	3850396	387
REC3850397	3850397	390
REC3850426	3850426	354-355-578-582
REC3850495	3850495	511
REC3850559	3850559	359
REC3850594	3850594	543-575
REC3850812	3850812	543-544
REC3850814	3850814	543
REC3850852	3850852	534-537-540-541-543-544-545
REC3850942	3850942	548
REC3852045	3852045	355-543-544-545-579
REC3852056	3852056	355-548-571
REC3852106	966906	468
REC3852106	966916	468
REC3852106	3852106	468
REC3852106	3852336	468
REC3852106		349-468
REC3852142	3852142	511
REC3852165	3852165	403
REC3852215	3852215	389
REC3852272	3852272	537-543-544
REC3852279	3852279	543
REC3852295	3852295	537-543-544-545
REC3852296	3852296	537-541-543
REC3852315	3852315	548-549-551
REC3852317	3852317	543
REC3852350	3852350	548-571
REC3852352	3852352	578-583
REC3852454	3852454	543
REC3852455	3852455	472-476-516
REC3852464	3852464	468
REC3852467	3852467	513-515
REC3852476	3852476	516
REC3852535	3852535	578
REC3852538	3852538	511-512-513-514-515-517-578
REC3852550	3852550	578
REC3852551	3852551	578-579
REC3852555	3852555	400-579
REC3852558	3852558	579
REC3852560	3852560	355-543-578
REC3852568	3852568	543
REC3852602	3852602	516
REC3852696	3852696	513-515-516-517-528
REC3852830	3852830	513-515-516-517
REC3852865	3852865	537-548
REC3852866	3852866	548-549-551-552-553-554
REC3852959	3852959	548-548-551
REC3852970	3852970	559
REC3852970AL	3852970	559
REC3853283	3853283	380-511
REC3853341	3853341	474-476
REC3853378	3853378	511
REC3853423	3853423	403-543-578
REC3853430	3853430	511
REC3853431	3853431	511
REC3853434	3853434	516
REC3853536	3853536	468
REC3853628	3853628	511
REC3853796	3853796	434-436
REC3853799	3853799	347-423
REC3853801	3853801	414
REC3853804	3853804	531
REC3853839	3853839	405
REC3853854	3853854	403-405
REC3853855	3853855	403-405
REC3853856	3853856	403-404
REC3853857	3853857	403-404
REC3853862	3853862	585
REC3853869		393-394-406
REC3853934	3853934	548-553
REC3853945	3853945	399
REC3853962	3853962	585
REC3853983	3853983	347-348-423
REC3854001	3854001	410-420
REC3854002	3854002	409
REC3854003	3854003	410-420
REC3854018	3854018	381-383
REC3854020	3854020	379-382-383
REC3854053	3854053	372
REC3854077	3854077	419
REC3854105	3854105	379-382-383
REC3854130	3854130	557-559
REC3854130	3854130	558-578
REC3854138	3854138	406
REC3854159	3854159	390
REC3854161	3854161	409
REC3854190	841066	393
REC3854190	3854190	393
REC3854190		406
REC3854217	3854217	418
REC3854218	3854218	418
REC3854247	3854247	402
REC3854260	3854260	416-420
REC3854261	3854261	416-420
REC3854286	3854286	441-442

REF	OEM	
REC3854311	3854311	416-420
REC3854331	3854331	416-420
REC3854480	3854480	537-543º
REC3854548	3854548	417-420
REC3854549	3854549	420
REC3854549	3862014	417
REC3854595	3854595	548-549-551
REC3854601	3854601	551
REC3854624	3854624	549-551
REC3854625	3854625	549-551
REC3854905	3854905	388
REC3855017	3855017	381-383
REC3855081	3855081	355-543-544-545-548-552-553-554
REC3855182	3855182	376
REC3855194	3855185	387
REC3855194	3855194	387
REC3855269	3853567	523
REC3855269	3854427	523
REC3855269	3855269	516-523
REC3855271	3850913	523
REC3855271	3853568	523
REC3855271	3854428	523
REC3855271	3855271	516-523
REC3855275	3855275	548-574
REC3855276	981650	372
REC3855276	3855276	372
REC3855411	3855411	560
REC3855411	3855411	548-549-551-557-558-559
REC3855650	853846	400
REC3855650	876317	400
REC3855650	3855650	400
REC3856002	3856002	574
REC3856002	3856002	548-549-551
REC3856008	897816	584
REC3856008	3852325	584
REC3856008	3856008	540-541-543-545-584
REC3856844	3856839	400
REC3856844	3856844	400
REC3856961	3856961	423
REC3857140	3857140	556
REC3857176	3856176	543
REC3857176	3857176	540-541-543-545
REC3857521	3857521	403
REC3857522	3857522	403
REC3857523	3857523	403-404
REC3857524	3857524	403-405
REC3857533	3857533	407
REC3857650	3857650	374
REC3857675	3857675	548
REC3857813	3857813	397
REC3857835	3857835	468
REC3857954	3857954	439-440-450
REC3858077	3858077	399
REC3858212	3858212	400
REC3858212	21652399	400
REC3858261	3850809	375
REC3858261	3857986	375
REC3858261	3858261	375
REC3858399	3858399	561
REC3858399	3858399	557-559
REC3858399	3858399	557
REC3858399AL		557-559-561
REC3858437	3853917	585
REC3858457	852206	570
REC3858457	872891	570
REC3858457	3856070	570
REC3858457	3858457	547-570
REC3858458	872872	570
REC3858458	3856069	570
REC3858458	3857307	570
REC3858458	3858458	547-570
REC3858462	966700	468
REC3858462	3858462	468
REC3858462		349
REC3858714	3858714	375
REC3858941	3858941	376
REC3858984	3858984	410
REC3859050	3859050	537-572
REC3859054		393-394-406
REC3859078	3859078	409
REC3859082	3859082	388
REC3859082	3861323	388
REC3860079	3860079	464-466
REC3860082	3860798	397
REC3860082	3862612	397
REC3860086		466
REC3860092	3860092	347-468
REC3860171	3860171	397
REC3860171	83857561	397
REC3860183	3860183	545
REC3860232	3860232	541-545
REC3860384	3858139	583
REC3860384	3860384	354-583
REC3860703	856513	440
REC3860703	3860703	440
REC3860703		441
REC3860769	3854809	397
REC3860769	3860769	397
REC3860808	3860808	556
REC3860842	3860842	543

REF	OEM	
REC3861267	3861267	409
REC3861375	3861375	407
REC3861376	3861376	406
REC3861575	3861575	398-399
REC3861634	3861634	561
REC3861634AL	3861634	561
REC3861636	3861636	560
REC3861636AL	3861636	560
REC3861985	3861985	409-421
REC3862105	3862105	537
REC3862228	3851218	358
REC3862228	3852413	358
REC3862228	3862228	358
REC3862228		34-348
REC3862387	3862387	539
REC3862500	3862500	390-513-515-517
REC3862500	38622500	511
REC3862523	3862523	463
REC3862523	3862526	436
REC3862612	3862612	398
REC3862852	3862852	463
REC3862867	3862867	539-544
REC3863007	3849411	400
REC3863007	3849413	400
REC3863007	3855535	400
REC3863007	3863007	400
REC3863080	3863080 +3863081	539-576
REC3863082	3863082	539
REC3863083	3863083	539-576
REC3863084	3863084	539
REC3863085	3863085	539-544
REC3863090	3858303	576
REC3863090	3863090	548-553-576
REC3863130	3863130	388-421
REC3863191	3863191	513-515-516-517
REC3863193AL	3863193	560
REC3863193AL	3863193	548-549-551-557-558-559
REC3863450	3863450	511-513-515-516-517-528
REC3883777	3883777	579
REC3883845	3589554	490
REC3883845	3883845	490
REC3884548	3884548	491
REC3884858	3803577	396
REC3884858	3803940	396
REC3884858	3884858	396
REC3884950	3862613	398
REC3884950	3862665	398
REC3884950	3884950	398
REC3884974	3860871	530
REC3884974	3884974	530
REC3885317	3860764	393
REC3886431	3886431	485
REC3887328	3842442	389
REC3887328	3887328	389
REC3887373	3887373	530
REC3887761	3887761	449
REC3887761	21951358	449
REC3887761		446-449
REC3888177		347-466
REC3888491		561
REC3888555	3888555	578-579
REC3888814	3589875	557
REC3888814	3888814	552-553-554-557-558-559
REC3888817	3841427	557
REC3888817	3888817	557-579
REC3888817		559
REC3888916	3888916	354-579-582
REC3888917	876392	575
REC3888917	3888917	544-575
REC3889782	3889782	544
REC3889784	3889784	552-553
REC3889786	3889786	552-553-554
REC3889788	3889788	579
REC3889964	3889964	513-515-517-523
REC3889964	3889965	523
REC391-5090	835304	415
REC391-5090Q1		415
REC392-6324Q1		414
REC392-6325Q1		414
REC392-9086T	841926	414
REC392-9766	3853815	414
REC393831	3850813	543
REC39631		543-578
REC398042	3850984	548-571
REC4-17ALU		588
REC4-19ALU		588
REC40005192	40005192	569
REC40005334	40005334	419-421
REC40005775	40005775	498
REC40155	3852224	358
REC40970	3817092	395
REC40990	22027280	395
REC41100098	41100098	560
REC41100098AL	41100098	560
REC41100276		559
REC41100276AL		559
REC41400		389
REC416033	416033	422-426
REC416033	418361	422
REC416033	1317466	422

REF	OEM	
REC416033	7416033	426
REC418411	418411	443-459
REC418412	418412	459
REC418445	418445	459-527
REC418737	418737	518-520
REC419310	419310	480
REC419310	419763	480
REC419643	419643	509-518-520
REC419678	419678	482
REC419734	419734	518
REC419735	419735	518
REC421306	421306	437
REC425784	425784	539
REC430017	430017	435
REC430018	430018	459
REC430020	430020	459
REC430039	430039	482
REC430172	430172	458
REC430272	430272	459-461
REC46-8M0113733	3854017	433
REC46-8M0113733	3858340	433-435
REC46-8M0113733		434
REC46-8M0113734	3853850	434-435-436
REC46-8M0113735	856609	433
REC46-8M0113735	3854118	433
REC46-8M0113735	3855991	433-436
REC46-8M0113735		434-435
REC46-8M0113736	3861341	434-436
REC46335	3853404	511-513-515-516
REC463377	463377	464-467
REC463395	463395	518
REC463526	463526	518
REC463739	463739	518-520
REC463902	463902	508
REC463902	955103	508
REC463903	463903	508
REC463905	463905	508
REC466382	466382	519
REC466383	466383	519
REC466384	466384	519
REC468305	468305	519
REC469482	469482	506
REC469483	422581	462
REC469483	469783	462
REC469846	424342	462
REC469846	469846	462
REC471034	471034	350-351-367
REC471956	471956	492
REC477024	192211	508
REC477024	463903	508
REC477024	477024	508
REC477026	192426	508
REC477026	477026	508
REC477026		509
REC478736	478736	368
REC478736	21707133	368
REC479956	479956	512-513-514-515-517
REC494MINORKIT		447-456
REC50-806965A4	3854750	393
REC50-806965A4	3856003	393
REC50-808011A05	3862985	394
REC50-808011A05	21129980	394
REC50-863007A1	3660566	393
REC50-863007A1	3857747	393
REC50-863007A1	3885317	393
REC50-863007A1		406
REC50-8M0090697	3862308	394-406
REC50-97499A2	841377	394
REC50-99418A2	3850525	393
REC50-99418A2	3853982	393
REC500442	3854002	420
REC500MA	22677639	364
REC500MA	35-850481	364
REC500MA	35-850481A1	364
REC500MACON		370
REC53773		513
REC53911		515
REC57-36356	966974	351-469
REC57-96834Q	952141	468
REC59830A7	3850815	543
REC6842160	6842160	498
REC6842273	6842273	498
REC70720		371
REC70817B	3853226	507
REC723MINORKIT		447-456
REC75832T	853255	540
REC76104		382-383
REC803148	3855296	387
REC803356	3588879	498
REC803762	803762	584
REC804190	804190	581
REC804190	813967	577
REC804695	804695	458
REC805222A1	3857449	418
REC805222A1	805222A1	420
REC805223T	3854527	390
REC806341	806341	510
REC806490T	3853787	390
REC806612T	3850357	388
REC806612T	22024631	388
REC806624	806624	577
REC807036	807036	462
REC807078	807078	389

REF	OEM	
REC807964A1	807964A1	418-420
REC813967	813967	577-581
REC814301	814301	569
REC814332	814332	555-570
REC814356	814356	555-569
REC814388	814388	555-568
REC814390	814390	555-569
REC814396	814396	555-570
REC814419	814419	555-569
REC8149182	8149182	353-425
REC817377	817377	418-420
REC818184	818184	505
REC819959	819959	452
REC823426A1	855889	381-383
REC823661		559-561
REC823661AL		559-561
REC824326002		471-518
REC824677	824677	380
REC826239	826239	450
REC826493	826493	372
REC827151	827151	391
REC827247	827247	458
REC827250	827250	452
REC82744	82744	462-512
REC82745	82745	462
REC82745	997641	510
REC828140	828140	560
REC829207	829207	349-469
REC829433	829433	444-452
REC829487	829487	495
REC829587	829587	389
REC829592	829592	463
REC829620	892260	518
REC829714	829714	443-459
REC829913	829913	349-352-360
REC831009	806256	452
REC831009	831009	452
REC831009		439
REC831239	831239	383
REC831617	831617	459
REC831622	831622	439-459
REC831986	831986	465
REC832191	832191	546
REC832534	832534	555-570
REC832570	832570	540
REC832598	832598	557-558-559
REC832598AL		557-558-559
REC832669	832669	540-541
REC832675	832675	540-541-545
REC832820	832820	555-568
REC832831	832831	583
REC832846	832846	569
REC832846	851452	555
REC832846	854031	555
REC832934	832934	559
REC832934AL	832934	559
REC833188	833188	518
REC833274	833274	484
REC833878	833878	451
REC833913	833913	560
REC833915	833915	560
REC833994	833994	452
REC833996	833996	458
REC834337	834337	366-534
REC834337	897321	366
REC834337	22057107	366
REC834337		349-352-
REC834751	834751	512-514-528
REC834871	834871	510
REC834975	834975	414
REC835581	835581	426
REC835702	835702	414
REC838066	838066	490
REC838637	833637	509-519
REC838638	838638	509-519
REC838652	838652	491-509
REC838653	838653	491-509
REC838654	838654	491
REC838766	838766	462
REC838775		509
REC838807	838807	422-425
REC838929		349-350-352-353-561-559
REC838929AL		559-561
REC839195	839195	402-555
REC839253	839253	540-541-545
REC839253	853670	573
REC839423	839423	546-570
REC839534	839534	546-570
REC84-817376T01	3854084	420
REC84-819514T26		399
REC840074	840074	391
REC840115	840115	490
REC840115	3875384	490
REC840384	833997	451
REC840384	840384	451
REC840385	840385	452
REC840442	840442	492
REC840569	840569	484
REC840648	818035	495
REC840648	840648	495
REC840785	803723	451
REC840785	804693	451
REC840785	840785	451

REF	OEM	
REC840902	840902	492-527
REC840902	3875050	492-524
REC840944	840944	493
REC840962	840962	386
REC841161	841161	372
REC841177	841177	407
REC841243	841243	415
REC841262	241710	413
REC841262	841262	413
REC841262		413
REC841263	841263	413
REC841294	841293	381-383
REC841693	841693	451
REC841750	841750	346-359
REC841769	873770	396
REC841893	824991	585
REC841893	831106	585
REC841893	841893	585
REC841994	841994	381-383
REC842080	842080	519
REC842280	842280	365
REC842280		350-351-352
REC842913	842913	524-527
REC843323	843323	584
REC845294	845294	383
REC845354	845354	457
REC846037	846037	384
REC847573	847573	430
REC847605	847605	391
REC847741	847741	350-351-353-367
REC850834	850834	399
REC850888	850888	546-560-570-588
REC850889	850889	546-570-588
REC85104134	3183241	377
REC85104134	85104134	377
REC85104134	85115324	377
REC85104134	85124676	377
REC85122800	85122800	591
REC851407	851407	537-547-549-551-552-554-576
REC851430	851430	402-577
REC852018	852018	560
REC852018AL	852018	560
REC852019	852019	559
REC852019AL	852019	559
REC852212	852212	537-547-549-551-552-554
REC852565	852565	405
REC852705	852705	541-545
REC852835	352835	557
REC852835	852835	557-559-577
REC852835		558
REC852835AL	3588770	557-558-559
REC852839	852839	404
REC852868	852868	577-581
REC852928	852928	398
REC852928	3586765	398
REC853048	853048	555-577
REC853175	853175	555
REC853484	853484	541
REC853542	853542	540
REC853678T	3857487	387
REC853759	853759	402-577
REC853760	853760	402-577
REC853808	853808	537-549-554-576
REC853808	853871	576
REC853808	853807 +853808	551-552
REC853868	853868	537-540-541-543-545-576
REC853998A1		376
REC854031	854031	569
REC854040	854040	546-548
REC854045	854045	546-570-588
REC854047	854047	546-570-588
REC854525	3858071	398
REC854541	854541	546
REC854935	854935	512-514
REC855105	855105	559
REC855105AL	855105	559
REC855297	841600	372
REC855297	855297	372
REC855314		406
REC855389	831778	585
REC855389	841895	585
REC855389	855389	585
REC855405	855405	428-429
REC855506	855506	464-467
REC855507	855507	465
REC855513	855513	483
REC855582	825582	429-461
REC855617	855617	585
REC855686	855686	346-347-356-358
REC855694	835550	585
REC855694	855648	585
REC855694	855694	585
REC855728	855728	451
REC855967	855967	483-510
REC856004	856004	426
REC856028	856028	510
REC856036	856036	512
REC856042	856042	512
REC856044	824633	483
REC856044	856044	483-510

REF	OEM	
REC856472	856472	381-383
REC857618	857618	512-514
REC857621	419628	480
REC857621	857621	480
REC857621	875543	480
REC857621	876783	480
REC858464	858464	576
REC858467	858467	452-444
REC858488	858488	349-350-365
REC858570	858570	431
REC858979	858979	430
REC858986	842744	461
REC858986	858986	461
REC859002	859002	527
REC859010	845301	433
REC859010	859010	433
REC859011	859011	527
REC859015	803374	492
REC859015	859015	492
REC859015		525-527
REC859027	859027	435-437
REC859027	1542229	435
REC859034	859034	431
REC859034	1542289	431
REC859038	842990	494
REC859038	859038	494
REC859039	859039	494
REC859039	1542219	494
REC859042	840572	490
REC859042	859042	490
REC859043	840440	490
REC859043	859043	490
REC859044	840461	490
REC859044	859044	490
REC859045	845291	428
REC859045	859045	428
REC859047	845585	429
REC859047	859047	429
REC859061	842669	428
REC859061	859061	428
REC859065	842645	431
REC859065	859065	431
REC859086	842586	433
REC859086	859086	433
REC859093	840405	485
REC859093	859093	485
REC859094	840328	484
REC859094	859094	484
REC859107	859107	492-525
REC859112		525-527
REC859120	802399	490
REC859120	859120	490
REC859131	844084	433
REC859131	859131	433
REC859134	838127	484
REC859134	859134	484
REC859135	859135	485
REC859135	3875376	485
REC859137	833453	484
REC859137	859137	484
REC859140	819720	493
REC859140	819723	493
REC859140	859140	493
REC859145	833598	492
REC859145	859145	492
REC859145	897322	492
REC859150	859150	486
REC859150	1544109	486-509
REC859151	833070	484
REC859151	859151	484
REC859152	829214	486
REC859152	829531	486
REC859152	859152	486
REC859155	858503	486
REC859155	859155	486
REC859155		509
REC859171	21501189	507-509-519
REC859194	859194	493
REC859194	3875382	493
REC859196	845353	431
REC859196	859196	431
REC859428	859428	373
REC859494	859494	376
REC859618	859618	406
REC859642	859642	502
REC859647	859647	486
REC859791	859791	504
REC859807	859807	505
REC859835		525-526-527
REC859836	859836	526-527
REC859836	3587410	526
REC859945	859945	504
REC859949	859949	505
REC860388	860388	350-469
REC860920	860920	430
REC860971	3582851	498
REC861019	861019	464
REC861103	861103	376
REC861250	860684	495
REC861250	861250	495
REC861250	1544124	495
REC861251	859032	495
REC861251	860685	495
REC861251	861251	495

REF	OEM	
REC861251	1542247	495
REC861255	861255	377-509
REC861260	861260	383
REC861263	861263	430
REC861407	861407	385
REC861414	861414	385-493-525-527
REC861431	861431	584
REC861473	861473	367
REC861473	861826	367
REC861473	3808605	367
REC861473		352-353
REC861476	859746	367
REC861476	861476	367
REC861476		349
REC861477	861477	360
REC861477	3580096	360
REC861477	3841080	360
REC861477	21190113	360
REC861477		352-353
REC861563	861563	465-467
REC861564	861564	349-350-467-469
REC861603	859726	495
REC861603	861603	495
REC861688	861688	377-509
REC861698	861698	519-509
REC861699	861699	519-509
REC861700	861700	507-519
REC861700	877072	507-519
REC861700	877073	507-519
REC861700		509
REC861725	861725	376
REC861822	861822	495
REC861823	861823	498
REC861860	861860	507-518
REC861865	861865	484
REC861907	861907	524-526-527
REC8631533	8631533	388
REC8631652	861700	519
REC8631652	877072	519
REC8631652	877073	519
REC8631652	8631652	519
REC863169	863169	391
REC863946	863946	392
REC8642665	8642665	491
REC864297T01	3858979	388
REC864315	863750	361
REC864315	864315	361
REC8653103	8653103	391
REC865428	865428	384
REC8658726	8658726	388
REC866653	866653	350-351-469
REC866835	866835	389
REC866836	866836	389
REC8676498	3803645	396
REC8676498	8676498	396
REC8692305	8692305	347-348-353-359-368
REC8692438	8692438	491
REC870690	870690	413
REC872066	872066	390
REC872082	872082	546-570
REC872096	872096	555-556-568
REC872096	876507	355-568
REC872139	872139	559
REC872139AL	872139	559
REC872334	872334	577
REC872338	872338	577
REC872362	872362	402
REC872722	872722	577
REC872752	872752	577
REC872752	872752	555-556-569
REC872753	872753	556
REC872756	872756	556
REC872793	872793	558-559
REC872793AL		558-559
REC872812	872812	402-577
REC872845	872845	577
REC872986	872986	556
REC873066	873066	391
REC873228	873228	404
REC873229	873229	404
REC873395	873395	558-559
REC873395AL		558-559
REC873413	873413	560
REC873534	873534	556
REC873549	859593	395
REC873549	872241	395
REC874502	874502	396
REC874502	3587216	396
REC874502	3803650	396
REC874502	3803846	396
REC874502	3803903	396
REC874502	3803911	396
REC874502	3819662	396
REC874502	3840181	396
REC875303	875303	505
REC875306	875306	504
REC875307	875307	504
REC875331	875331	505
REC875334	875334	504
REC875383	875383	455
REC875387	875387	497
REC875387	875421	497
REC875407	875407	381-383

REF	OEM	
REC875439	875439	497
REC875498	875498	502
REC875499	875499	502
REC875512	804186	583
REC875512	875512	583
REC875512	875827	583
REC875541	875320	502
REC875541	875541	502
REC875541	875655	502
REC875550	875550	501
REC875551	875551	501
REC875574	875574	455
REC875574	876081	455
REC875575	875575	439-441-442-448-449-453-455
REC875579	875579	501
REC875580	875580	346-349-423
REC875584	875584	455
REC875676	875676	502
REC875697	875697	449
REC875697	875814	449
REC875697	21951364	449
REC875698	875698	454
REC875698	21951420	454
REC875698		454
REC875722	275052	502
REC875722	875652	502
REC875722	875707	502
REC875722	875722	502
REC875722		509
REC875741	876266 +876267	572
REC875756	875756	455
REC875757	875757	496
REC875769	875769	455
REC875769	21951410	455
REC875783	875783	349-424
REC875785	875785	349-351-352-424
REC875791	831040	423
REC875791	875791	423
REC875791		346
REC875796	875796	349-423-424
REC875805	875805	560
REC875805AL	875805	560
REC875809	875809	560
REC875809AL	875809	560
REC875810	875810	560
REC875810AL	875810	560
REC875812	875812	560
REC875812AL	875812	560
REC875815	875815	560
REC875815AL	875815	560
REC875821	875821	546-547-557-558-559-560
REC875821AL	875821	546-547-557-558-559-560
REC875822	875822	354-583
REC875822	22303438	583
REC876037	876037	407
REC876054	876054	496
REC876069	849270	369
REC876069	876069	369
REC876069	876070	369
REC876069	3830004	369
REC876069		349-350-351-352
REC876073	876073	575
REC876080	82812	423
REC876080	824912	423
REC876080	875781	423
REC876080	875790	423
REC876080	876080	423-424
REC876080	876097	424
REC876080	876797	423
REC876080		346-349-425
REC876099	838660	502
REC876099	867975	502
REC876099	876099	502
REC876099		509
REC876114	876114	502
REC876144	876144	493
REC876161	876161	502
REC876185	463505	366
REC876185	863344	366
REC876185	876185	366
REC876185		349-350-351
REC876266	876266	540-541-574
REC876267	876267	547-573
REC876268	876268	573
REC876278	826341	355-555-568
REC876279	853223	555
REC876279	853223	568
REC876279	876279	568
REC876279		355
REC876286AL	876286	535-559-560
REC876294	875826	582-583
REC876294	876294	354-540-541-582-583
REC876294	897889	582-583
REC876294		355
REC876300	875587	481
REC876300	876300	481
REC876300		480
REC876301	875678	481
REC876301	876301	481

REF	OEM	
REC876301		480
REC876302	876022	481
REC876302	876302	481
REC876302		480
REC876303	876071	481
REC876303	876303	481
REC876303		480
REC876304	876072	484
REC876304	876304	484
REC876305	424299	423
REC876305	835177	423
REC876305	875794	423
REC876305	876305	423
REC876305		346-347
REC876306	875403	483
REC876306	876306	483
REC876307	876307	484-487
REC876308	876308	484-487
REC876310	876310	485-487
REC876314	875509	496
REC876314	876314	496
REC876337	875402	480
REC876337	875533	480
REC876337	875570	481
REC876337	876335	480
REC876337	876337	480
REC876337	876359	481
REC876337		480
REC876341	875561	487
REC876341	876341	487
REC876341		484
REC876342	875400	483
REC876342	876342	483
REC876349	875634	497
REC876349	876349	497
REC876349		495
REC876356	876356	480
REC876358	875569	481
REC876358	876358	481
REC876358		480
REC876361		495
REC876376	875553	487
REC876376	876376	484-487
REC876377	875500	487
REC876377	875502	487
REC876377	875504	487
REC876377	876374	487
REC876377	876375	487
REC876377	876377	487
REC876377		484
REC876378	875501	495
REC876378	876378	495
REC876379	875508	487
REC876379	876379	487
REC876379		485
REC876380	875572	487
REC876380	876380	487
REC876380		484
REC876381	875562	496
REC876381	876381	496
REC876382	875715	496
REC876382	876382	496
REC876383	875573	496
REC876383	876383	496
REC876384	875554	496
REC876384	876384	496
REC876388	875505	495
REC876388	876388	495
REC876389	875503	496
REC876389	876389	496
REC876391	875720	535-571
REC876391	876391	535-571
REC876391		535
REC876393	875588	484
REC876393	876393	484
REC876393	876433	484
REC876416	875438	489
REC876416	876416	489
REC876417	875388	488
REC876417	875567	488
REC876417	876417	488
REC876417		486
REC876427	876032	497
REC876427	876427	497
REC876427		495
REC876431	876430	487
REC876431	876431	487
REC876431		485
REC876448	876023	484
REC876448	876448	484
REC876511	876511	506-509
REC876515	876515	505-509
REC876516	876516	505-509
REC876519	876519	505-509
REC876520	876520	505-509
REC876548	876548	502
REC876548	876611	502
REC876554	876554	349-361
REC876588	876588	575
REC876614	876614	405
REC876631	875848	582
REC876631	876631	354
REC876631	876631	540
REC876631	876631	577

REF	OEM	
REC876631	876631	582
REC876631		355
REC876631	876631	556
REC876633	876633	354-540-582
REC876638	876638	559
REC876638AL	876638	559
REC876655	876655	497
REC876774	876106	498
REC876774	876362	498
REC876774	876531	498
REC876774	876774	498
REC876774		495
REC876775	3586758	503-509
REC876793	876560	438
REC876793	876793	438
REC876794	876544	438
REC876794	876794	438
REC877349	877349	349-424
REC877355	877355	352-424
REC877362	21389074	354-535-572
REC877373	875759	455
REC877373	876088	455
REC877373	876529	455
REC877373	877373	455
REC877419	877419	497
REC879194401	21124846	434-435-436
REC88-79023T10		408
REC883166A2	3861570	399
REC8845		375
REC885176	3858969	376
REC885195	885195	590
REC8865		374
REC886MINORKIT		447-456
REC888596	888596	525-527
REC889419	889419	362
REC889422	889422	362
REC889455	889455	539
REC889486	889486	491
REC889672	889672	535
REC889970	889970	377
REC890MINORKIT		446-456
REC892617	3808516	388
REC897367	897367	546-570
REC897426	897426	546-576
REC897682	897682	355-540-541
REC897726	897726	581
REC898253013	3858977	417-418-421
REC898253013	898253013	417-418
REC89825302	508935	415
REC898253T22	3858975	418-421
REC898253T23	3859019	417-421
REC8M0068784	3857532	389
REC8M0073435	3854858	372
REC8M0077616	3854512	388
REC8M0087834	3858987	387
REC8M0087834	3859020	387
REC8M0125617	3855184	387
REC8M6001217	835308	415
REC8M6001219	835705	414
REC8M6001249	835704	414
REC9-29307		413
REC906633	906633	575
REC908765	826479	380
REC908765	856033	380
REC91-25034		530
REC91-888863	885163	420
REC9139282	462623	480
REC9139282	9139282	480
REC9139284	430107	480
REC9139284	461056	480
REC9139284	461618	480
REC9139284	913928	480
REC9139284	3855409	480
REC914462	914462	437-581
REC914515	914515	452
REC914533	914533	581
REC925050	925050	402-577
REC925052	905052	541
REC925054	925054	535
REC925055	925055	461
REC925064	925064	577
REC925066	12291	461
REC925066	213244	461
REC925066	925066	461
REC925066	14012291	461
REC925066	14213244	461
REC925068	23405	461-462
REC925068	925068	461-462
REC925068	11991571	461-462
REC925068	14023405	461-462
REC925093	925093	443-537-540-541-543-544-545
REC925096	12330	461
REC925096	925096	461
REC925255	925255	461
REC925256	925256	535-540-545-546-547-556-573-577
REC925258	925258	547
REC925259	925259	539-552-553-554-555-556-573
REC925260	925260	534-539
REC925261	925261	546

REF	OEM	
REC93568		358
REC940136	940136	512-514
REC940191	940191	556
REC940191	940191	539-555
REC941807	941807	541
REC941816	941816	540
REC941820	941820	555
REC941907	941907	535
REC941907	941907	512-514
REC942336	942336	512-514
REC942547	942547	512-514
REC942615	942615	540
REC942791	942791	537
REC944988	944988	378
REC945624	945624	539
REC946056	946056	579
REC946242	946242	581
REC946438	946438	537-549-551
REC947620	946729	378
REC947620	947620	378
REC947620	6601761	378
REC947620	20459900	378
REC947622	947622	378
REC947622	993436	378
REC947622	13947622	378
REC947622	20450903	378
REC947622	20549894	378
REC947627	947627	378
REC947627	13947627	378
REC947893	947893	463
REC947904	947904	577
REC948610	925067	429
REC948610	948255	429
REC948610	948610	429-461
REC949187	949187	492
REC949656	949656	534-537-544
REC949657	925060	462
REC949657	949657	462
REC949657	13949657	462
REC949658	12276	433
REC949658	949658	433
REC949659	12288	462
REC949659	925065	462
REC949659	949659	462
REC949659	14012288	462
REC949721	12279	431-433
REC949721	925062	431-433
REC949721	949721	431-433
REC949721	13949721	431-433
REC949721	14012279	431-433
REC949722	949722	433
REC949722	13949722	433
REC949841	949841	494
REC949974	94997	433
REC951924	951924	540-541-543
REC951936	951936	539-544
REC952980	952980	528
REC955893	955893	549-551-554
REC955974	955974	355-535-540-541-546-547-573
REC955976	12262	459-492
REC955976	926033	459-492
REC955976	955976	459-492
REC955976	6647311	459-492
REC955976	14012262	459-492
REC955981	955981	355-509-537-549-551
REC955989	955989	355-534-540-541
REC956000	956000	540-541-545-573
REC956590	956590	541
REC957170	957170	378
REC957171	957171	378
REC957181	18840	378
REC957181	957181	378
REC957181	1218022	378
REC957181		391
REC957184	957184	378
REC957184	6613687	378
REC958860	941870	581
REC958860	958860	581
REC959794	959794	514
REC959796	959796	512
REC960166	960166	457
REC964106	964106	428
REC966207	966207	402-577
REC966382	966382	346-467
REC966383	966383	349-468
REC966387	966387	469
REC966694	966694	346-467
REC966707	966707	349-468
REC966891	966891	346-467
REC966900	966900	352-469
REC966903	966903	352-469
REC966906	966906	349-350-352-468-469
REC966914	966914	468
REC966931	966931	349-468
REC966933	966933	349-468
REC966942	966942	349-468
REC966978	966978	349-350-469
REC966990	966698	468
REC966990	966990	468
REC966990		349
REC967111	967111	346-347-467-468

REF	OEM	
REC967344	967344	445-537-541-543-544-545
REC967707	967707	556
REC967944	967944	493
REC968048	968048	395
REC968555	968555	459
REC968927	968927	422-460
REC968955	968955	508
REC968955	1542263	508
REC968955	60112158	510
REC968955		509
REC968971		443-444
REC969011	969011	378
REC969011	13969011	378
REC969011	20459972	378
REC969011	21108673	378
REC969071	969071	546-547
REC969073	969073	546
REC969198	967643	492
REC969198	969198	492
REC969331	967763	458
REC969331	969331	458
REC969415	969415	433-527
REC973593	973593	545
REC973639	973639	450
REC975309	975309	433
REC975672	925091	429
REC975672	975672	429
REC975672		441-443
REC976018	955988	378
REC976018	976018	378-534
REC976018	13955988	378
REC976039	859055	506
REC976039	976039	506
REC976039	980936	506
REC976039	1542385	506
REC976041	976041	433
REC976051	976051	428
REC976106	190187	433
REC976106	976106	433
REC976483	976483	350-469
REC977542	977542	349-350-469
REC978217		467
REC978482	978482	352-469
REC978750	978750	346-347-467-468
REC979254	979254	556-569
REC981183	981183	378
REC982209	508932	415
REC982230	841054	358
REC982230	855952	358
REC982230	877765	358
REC982230		346
REC982570		467
REC984068	984068	541-545
REC984222	984222	539
REC984223	984223	539
REC984224	984224	539
REC984225	984225	539
REC984491	3854019	358
REC985052		382-383
REC990899	990899	569
REC994130	994130	508
REC994130	1306341	508
REC997368	997368	544
REC997368	3852565	537
REC997368	3852565	543
REC997641	947894	463
REC997641	949918	463
RECC2		589
RECC3		589
RECC5		589
RECC6		589
RECEFP-KT		375
RECGS00530		364-365
RECGS01030		364-365
RECGS01830		365
RECHOL17-6		380
RECKIT280DP		355
RECKIT290DP		355
RECKIT290SP		355
RECKITDP		402
RECKITDP2		402
RECKITDPC-D-E		355
RECKITDPH		355
RECKITDPR		355
RECKITDPS-SX		355
RECKITSPE		355
RECKITSXA		355
RECKITV280AL		560
RECKITV280AL		561
RECKITV280DPAL		561
RECKITV280DPAL		561
RECKITV280DPAL		355-560
RECKITV280DPM		560
RECKITV280DPM		561
RECKITV280DPZN		560
RECKITV280M		560
RECKITV280M		561
RECKITV280ZN		560
RECKITV280ZN		561
RECKITV290AL		561
RECKITV290AL		355-560
RECKITV290DPAL		355-560
RECKITV290DPM		560

REF	OEM	
RECKITV290DPZN		560
RECKITV290M		560
RECKITV290M		561
RECKITV290ZN		560
RECKITV290ZN		561
RECKITVDPHAL		561
RECKITVDPHAL		355-560
RECKITVDPHM		560
RECKITVDPHM		561
RECKITVDPHZN		560
RECKITVDPHZN		561
RECKITVSXAAL		561
RECKITVSXAAL		355-560
RECKITVSXAL		561
RECKITVSXAL		355-560
RECKITVSXAM		560
RECKITVSXAM		561
RECKITVSXAZN		560
RECKITVSXAZN		561
RECKITVSXM		560
RECKITVSXM		561
RECKITVSXZN		560
RECKITVSXZN		561
RECOBBRACKET		356
RECOILCOOLER		431
RECPG260		393
RECRA122002		406
RECRK21069		371
RECSWK-2000/10		364
RECSWK-2000/5		364
RECV11010	11010	451
RECV11010	861812	451
RECV11010	3578536	451
RECV11010	3884972	451
RECV11010	6600756	451
RECV11013	11013	581
RECV11013	7011013	581
RM1542287	1542287	491-509
RM184691	184691	537-547-551-552-554-549
RM20856959	20856959	506
RM20867177	20867177	506
RM20867178	20867178	504
RM20867661	20867661	506
RM20867751	20867751	504
RM21132385		348-466
RM21132674	21132674	354-530
RM21132989	3884512	504
RM21132989	21132989	504
RM21132990	21132990	505
RM21139810	21139810	353-360
RM21186281	3580478	519
RM21186282	21307714	519
RM21212798	3812522	439
RM21212798	21212798	439
RM21212801	21131568	439
RM21212801	21212801	439
RM21214595	3812696	439
RM21214595	3861417	439
RM21214595	3862485	439
RM21214595	21214595	439
RM21214595		450
RM21214596	3812697	440
RM21214596	3858229	440
RM21214596	3862487	440
RM21214596	21214596	440
RM21214596		450
RM21226191	3884515	504
RM21226191	21226191	504
RM21228429	21228429	486
RM21252967	21252967	505
RM21255090	3812520	440
RM21255090	21255090	440
RM21277185	3841482	583
RM21277185	3886847	583
RM21277185	21277185	354-583
RM21301848	21301848	503
RM21314684	21314684	353-469
RM21319767	21319767	504
RM21325765	842993	525-527
RM21325765	21325765	525
RM21399021		466
RM21405494	3583729	353-467-469
RM21407026	21407026	469
RM21412646	21412646	425
RM21492771	466987	360
RM21492771	829993	360
RM21492771	3825133	360
RM21492771	21492771	360
RM21548739	3863347	529
RM21548739	3863405	529
RM21548739	3863406	529
RM21548739	3863407	529
RM21548739	21548739	529
RM21608511	3594444	374
RM21608511	3860210	374
RM21608511	3861355	374
RM21608511	21545138	374
RM21608511	21608511	374
RM21608511		374-375
RM21610333	3854086	379
RM21610333	3857982	379
RM21610333	21132437	379
RM21610333	21610333	379
RM21632901	21632901	368

REF	OEM	
RM21632901	22030852	368
RM21745117	21745117	529
RM21745117	22256625	529
RM21745117	22452003	529
RM22197130	22197130	354
RM22197130	22197130	579
RM22197130	22197130	582
RM22197130		355
RM23538670	23538670	368
RM23954708	22984479	361
RM23954708	23954708	361
RM23954708		353
RM243801	243801	412
RM30731740	30731740	503
RM30750678	30750678	503
RM31261191	8683212	360
RM31261191	31261191	360
RM31261191		353
RM3517857	418432	359-366
RM3517857	430143	359-366
RM3517857	1266286	359-366
RM3517857	3517857	359-366
RM3580303	3580303	518
RM3580304	3580304	518-519
RM3580337	3580337	503
RM3580338	3580338	503
RM3580365	3580365	352-424
RM3580546	3580546	503
RM3580547	3580547	503
RM3581114	3581114	528
RM3581115	3581115	528
RM3581460	3581460	349-469
RM3581621	861474	366
RM3581621	861475	366
RM3581621	3581621	366
RM3581621	21549544	366
RM3581724	860786	392
RM3581724	3581062	392
RM3581724	3581724	392
RM3582357		365
RM3582424		467
RM3582732	3582732	368
RM3582732	22030848	368
RM3583443	3583443	361
RM3583443	21718912	361
RM3583693	3583693	503
RM3584086	3584086	353-469
RM3586324		466
RM3586325		347-466
RM3586326		466
RM3586871	3586871	504
RM3586873	3586873	504
RM3586877	3586877	504
RM3586883	3885323	506
RM3587072	3587072	396
RM3587651	3587651	511-513-515-516-517-578
RM3588435	3588435	385-386-493
RM3588437	3588437	425
RM3588865	3588865	374
RM3807613	3807613	537-540-541-543-544-545
RM3809625	3809625	353-469
RM3809662	3809662	519
RM3812159	3812159	353-469
RM3812472	3812472	503
RM3812474	3812474	503
RM3817517	3817517	361
RM3817517	3828838	361
RM3817517	3839469	361
RM3819722		585
RM3819723		585
RM3819724		585
RM3819725		585
RM3819726		585
RM3819727		585
RM3819728		585
RM3827069	829161	366-368
RM3827069	829390	368
RM3827069	3827069	366-368
RM3827069	21549542	366-368
RM3838952	3827167	365
RM3838952	3838952	365
RM3838952		351
RM3840335	3588378	360
RM3840335	3840335	360
RM3840335	21624740	360
RM3840525	3589316	367
RM3840525	3840525	367
RM3840525		352
RM3841366	3841366	406
RM3842015	3842015	353-424
RM3847644	3847644	358
RM3850430	3850430	347-468
RM3850559	3850559	347-359
RM3851334	3851334	547
RM3851482	3851482	589
RM3851482	21258482	589
RM3851483	3851483	589
RM3851483	21258483	589
RM3851484	21258484	589
RM3852268	3852268	546-547-548-549-551-552-553-554
RM3852288	3852288	436-463

REF	OEM	
RM3852289	3852289	435-463
RM3852390	3852390	537-540-541-543-544-545
RM3852418	3852418	543
RM3852504	3852504	468
RM3852516	3852516	543
RM3852573	3852573	403
RM3852607	3852607	347-468
RM3852958	3852958	403
RM3853424	3853424	403-543
RM3853608	3853608	528
RM3853825	3853825	404
RM3854643	3854643	347-468
RM3854874	3854874	513-523
RM3856365	21258485	589
RM3856366	3856366	589
RM3856366	21258486	589
RM3856367	3856367	589
RM3856367	21258487	589
RM3856502	3856502	537-540-541-543-545
RM3857148	3857148	541
RM3857391	3857391	435-463
RM3857431	3857431	403
RM3857470	3857470	403
RM3857471	3857471	401
RM3857588	3857588	403
RM3858051	3858051	548
RM3858128	3812269	529
RM3858128	3860726	529
RM3858128	3860883	529
RM3858128	3862210	529
RM3858128	3862513	529
RM3858128	21910902	529
RM3858631	3858631	578
RM3858873	3850794	522
RM3858873	3850796	522
RM3858873	3853915	522
RM3858873	3855281	522
RM3858873	3858873	513
RM3858873	3858873	515
RM3858873	3858873	516
RM3858873	3858873	517
RM3858873	3858873	522
RM3858873	3858873	578
RM3860087	3860087	347-468
RM3860093	3860093	468
RM3860230	3860230	540-541-545
RM3860252	3860252	548-549-551
RM3860842	3860842	544
RM3860842	3860842	537-543
RM3860881	872837	401
RM3860881	3860881	401
RM3860881		401-402
RM3861459	3852362	521
RM3861459	3861459	517-521
RM3861500		466
RM3861501		466
RM3862228	3851218	358
RM3862228	3852413	358
RM3862228	3862228	358
RM3863189	3863189	513-515-523
RM3883257	3883257	578-579
RM3883844	1275549	494
RM3883844	3883844	494
RM3883844		385
RM3884010	3884010	519
RM3884015	3884015	519
RM3884517	3884517	504
RM3884528	3884528	519
RM3884557	3884557	505
RM3884561	3884561	505
RM3885196	3850683	401
RM3885196	3885196	401
RM3885250	3587858	464
RM3885250	3587859	464
RM3885250	3861010	464
RM3885250	3885250	464
RM3885250		465-466
RM3885324	3885324	506
RM3885870	388587	354
RM3885870	3885870	583
RM3888323	3850491	530
RM3888323	3850492	530
RM3888323	3888323	530
RM3888323		531
RM3889124		348-466
RM3889127		466
RM466634	466634	367
RM466634	21707134	367
RM471034	471034	367
RM477556	471392	368
RM477556	477556	368
RM477556	21707132	368
RM4785974	423135	367
RM4785974	4785974	367
RM478736	478736	368
RM478736	21707133	368
RM6210419	6210419	349-424
RM813316	813316	588
RM813317	813317	588
RM814611	814611	588
RM814612	814612	588
RM814615	814615	588
RM814616	814616	588

REF	OEM	
RM814626	814626	588
RM814627	814627	588
RM814628	814628	588
RM814631	814631	588
RM814632	814632	588
RM814633	814633	588
RM826422		440
RM828254		585
RM828422		585
RM828526		585
RM828527		585
RM829205	818666	429
RM829205	829205	429
RM831834-7	831834	512-522
RM831960	831960	459
RM834337	834337	366
RM834337	897321	366
RM834337	22057107	366
RM835440-9	835440	359
RM835440-9	3852030	359
RM835440-9	3852412	359
RM841750	841750	359
RM841812	841812	397
RM843228	843228	528
RM843228	REC859011	526
RM847741	847741	367
RM85108974	85108974	392-592
RM852904	852904	546-547
RM852984-4	852984	402-577
RM854100	854100	555
RM854133	854133	555
RM854661	854661	541
RM854704	854704	402-577
RM854705	854705	402-577
RM854977	854977	588
RM854978	854978	588
RM854979	854979	588
RM854982	854982	588
RM854983	854983	588
RM854984	854984	588
RM854986	854986	588
RM854992	854992	588
RM854993	854993	588
RM854994	854994	588
RM854997	854997	588
RM854998	854998	588
RM854999	854999	588
RM855409	855409	429
RM855410	855410	429
RM855423	855423	429
RM855428	855428	464
RM855433	855433	429
RM855686-2	855686	358
RM855791	831931	429
RM855791	855791	429
RM856083	855407	429
RM856083	856083	429
RM856239	831972	464
RM856239	855473	464
RM856239	856239	464
RM857624	857624	404
RM858955	858729	528
RM858955	858955	528
RM858955		524-526
RM859650	859650	518
RM859656	859656	518
RM859834	859834	384-385-493-527
RM860396		524-526-528
RM860409	860409	430
RM860993	860433	392
RM860993	860434	392
RM860993	860435	392
RM860993	860993	392
RM861473	861473	367
RM861473	861826	367
RM861473	3808605	367
RM861476	859746	367
RM861476	861476	367
RM861477	861477	360
RM861477	3580096	360
RM861477	3841080	360
RM861477	21190113	360
RM861657	861657	430
RM861858		518
RM861859	861859	518-519
RM861906	861906	524-527
RM861906	21190094	524
RM861911	861911	352-424
RM861954	861954	502
RM861955	861955	502
RM8631650	8631650	519
RM872027	872027	541
RM872363	872363	402
RM872549	872549	547-570
RM872612-7	853439	401
RM872612-7	854610	401
RM872612-7	872612	401
RM872612-7		401-402
RM872614	853655	570
RM872614	854057	570
RM872614	854666	570
RM872614	872614	547-570
RM873183	873183	555
RM875483	875483	503

REF	OEM	
RM875485	875485	503
RM875491	875491	505
RM875492	875492	505
RM875747	875747	505
RM875748	875748	505
RM875750	875750	503
RM875751	875751	504
RM875753	875753	504
RM875773	875773	503
RM875774	875774	503
RM875795	875795	352-424
RM876294	875826	582-583
RM876294	876294	582-583
RM876294	897889	582-583
RM876512	876512	506-509
RM876631	875848	582
RM876631	876631	577-582
RM876632	854555	583
RM876632	875747	583
RM876632	876632	354-577-583
RM876633	876633	582
RM876657	876657	504
RM876658	876658	504
RM876660	876660	505
RM876661	876661	505
RM876663	876663	505
RM876664	876664	505
RM876666	876666	504
RM876667	876667	504
RM876669	876669	506
RM876670	876670	506
RM876672	876672	506
RM876680	876680	506
RM876682	876682	506
RM876683	876683	506
RM876685	876685	506
RM876686	876686	506
RM877387	877387	504
RM877388	877388	506
RM88-79023A91		408
RM881797	872616	392
RM881797	881797	392
RM888624	888624	353-425
RM9180722	31251996	506
RM966391		350
RM966912	966912	349-469
RM966953	966953	351-469
RM967114	967114	352-353-469
RM967191	967191	347-468
RM967193	967193	350-351-469
RM973534	973534	352-469
RM977313	977313	402-555-577
RM978454	978454	347-468
RM981965	981965	540-541
RMTUBOVOLVO		401
S		
SED3090900	861906	526-527
SED3090900	21190094	526
SED3091000	845261	526-527
SED3091200	860656	526
SED3091200	861289	526-527
SED3091400	865545	526
SED3091400	3826841	526
SED3091400	3829668	526
SED3091400	3830988	526-527
SED3091600	3587159	526
SED3091600	3841510	526
SED3091600	21684825	526-527
SED3091600	22671213	526
SED3091600	22948844	526
SED3094200		431
SHE09959K	3854286	346-347-441-442
SHE10615K	835874	441
SHEG9901	3851623	440
SHEG9901	3852398	440
SHEG9901	3855778	440
SHEG9901	3858847	440
SHEG9903	3851982	440
SHEG9903	3852399	440
SHEG9903	3855079	440
SHEG9903	3857794	440
SOL8611-142-23	3817470	587
SOL8611-143-21	3817469	587
SOL8611-145-19	3817468	587
SOL8611-148-17	3817467	587
SOL8611-150-15	3817466	587
SOL8612-143-21		587
SOL8612-145-19	3817473	587
SOL8612-148-17	3817472	587
SOL8612-150-15	3817471	587
SOL8613-140-21	3817469	587
SOL8613-143-19	3817468	587
SOL8613-145-17	3817467	587
SOL8613-148-15	3817466	587
SOL8614-140-21		587
SOL8614-143-19	3817473	587
SOL8614-145-17	3817472	587
SOL8614-148-15	3817471	587
SOL8641-155-15	3817466	587
SOL8642-145-23	3817470	587
SOL8642-155-15	3817471	587
SOL8651-140-24	3850305	587
SOL8651-145-21	3817469	587
SOL8651-148-17	3817467	587

REF	OEM	
SOL8651-148-19	3817468	587
SOL8652-140-24	3850315	587
SOL8652-145-21		587
SOL8652-148-17	3817472	587
SOL8652-148-19	3817473	587
SOL8712-143-21		587
SOL8712-145-19		587
SOL8712-148-17		587
SOL8712-150-15		587
SOL8811-142-23		587
SOL8811-143-21	872004	587
SOL8811-145-19	872003	587
SOL8811-148-17	872002	587
SOL8811-150-15	872001	587
SOL8811-153-19	872003	587
SOL8811-153-21	872004	587
SOL8811-155-17	872002	587
SOL8811-158-15	872001	587
SOL8812-142-23		587
SOL8812-143-21	854990	587
SOL8812-145-19	854989	587
SOL8812-148-17	854988	587
SOL8812-150-15	854987	587
SOL8812-153-19	854989	587
SOL8812-153-21	854990	587
SOL8812-155-17	854988	587
SOL8812-158-15	854987	587
SOL8831-150-15	854996	587
SOL8831-150-17	854997	587
SOL8831-150-19	854998	587
SOL8831-150-21	854999	587
SOL8832-150-15	854981	587
SOL8832-150-17	854982	587
SOL8832-150-19	854983	587
SOL8832-150-21	854984	587
SOL8841-156-15	872001	587
SOL8841-156-17	872002	587
SOL8841-156-19	872003	587
SOL8841-156-21	872004	587
SOL8841-156-23		587
SOL8842-156-15	854987	587
SOL8842-156-17	854988	587
SOL8842-156-19	854989	587
SOL8842-156-21	854990	587
SOL8842-156-23		587
SOL9511-143-21		587
SOL9511-145-19		587
SOL9511-148-17		587
SOL9511-150-15		587
SOL9512-143-21		587
SOL9512-145-19		587
SOL9512-148-17		587
SOL9512-150-15		587
SOL9513-140-21		587
SOL9513-143-19		587
SOL9513-145-17		587
SOL9513-148-15		587
SOL9531-140-19		587
SOL9531-140-21		587
SOL9531-140-23		587
SOL9531-143-17		587
SOL9531-145-15		587
SOL9532-140-19		587
SOL9532-140-21		587
SOL9532-140-23		587
SOL9532-143-17		587
SOL9532-145-15		587
SOL9571-148-23		587
SOL9571-150-21		587
SOL9571-153-19		587
SOL9571-155-17		587
SOL9572-158-15		587
SOL9572-148-23		587
SOL9572-150-21		587
SOL9572-153-19		587
SOL9572-155-17		587
SOL9572-158-15		587
SOLRBX-105		587
T		
TEN00704BIS	875821	560
TEN00706	851983	560
TEN00706	876286	560
TEN00707	832598	561
TEN00708	852835	561
TEN00713	832989	563
TEN00713T		563
TEN00713TP		563
TEN00714	838929	563
TEN00714-1		563
TEN00714T		563
TEN00714TPF		563
TEN00714TPM		563
TEN00715	838929	562
TEN00716	823661	563
TEN00716T		563
TEN00716TP		563
TEN00717	872793	561
TEN00718	3854130	561
TEN00719	833913	567
TEN00719-1	873411	567
TEN00720-1	833915	562
TEN00721-1		562
TEN00722	873395	561
TEN00722AL	873395	561

REF	OEM	
TEN00726	3855411	560
TEN00726AL	3855411	560
TEN00728	3858399	562
TEN00732	4100276	562
TEN00733	3588746	562
TEN00733	3588748	562
TEN00733	3588750	562
TEN00733BIS	3888814	562
TEN00734	3888305	561
TEN00734	3888306	561
TEN00735	3888814	562
TEN00737	3888817	562
TEN00738	3599981	562
TEN00739AL	40005875	562
TEN02022T		510
TEN02029T	3858995	348-563

REF	OEM
TENKITVOLVO280	563
TENKITVOLVO290	563
TENKITVOLVO290-C	564
TENKITVOLVODP280	564
TENKITVOLVODP290	564
TENKITVOLVODP290-C	564
TENKITVOLVODPH/DPR	564
TENKITVOLVOELICA3PAL	564
TENKITVOLVOIPS	564
TENKITVOLVOSX	564
TENKITVOLVOSXA/DPASA	564
TENKITVOLVOXDP-B	564
TITAN	586
TRI305-0386	371
TRI305-0566	371

OEM --> REF

OEM	REF	
11010	RECV11010	451
11013	RECV11013	581
11043	REC11043	539
11044	REC11044	547-549-551
11065	REC11065	539
11072	REC11072	546-547
11096	REC11096	539
11994	REC11994	378-422
12262	REC955976	459-492
12276	REC949658	433
12279	REC949721	431-433
12288	REC949659	462
12291	REC925066	461
12330	REC925096	461
17253	REC17253	555-556
17276	REC17276	355-539-555-556
18671	REC1542159	378
18818	REC18818	378
18839	REC11994	422
18840	REC957181	378
23405	REC925068	461-462
38201	REC38201	515
82744	REC82744	462-512
82745	REC82745	462
82812	REC876080	423
94997	REC949974	433
110386	REC11994	422
125017	REC125017	355-545-555-556-573
128670	REC128670	571
181538	REC181538	437
181620	REC181620	555
181670	REC1660609	437
181717	REC181717	451
181804	REC181804	539
183247	REC183247	540-541-543-544-545
183272	REC183272	537-547-549-551-552-554
183374	REC183374	546-547
183390	REC183390	546
183391	REC183391	555
183512	REC31-86748A1	551
183765	REC183765	539
183859	REC183859	537-547-549
183859	REC183859	551-552
183861	REC183861	451
183959	REC183859	554
184642	REC183390	539
184654	REC184654	539-547-549-551-552-554
184682	REC184682	547-549-551
184683	REC184683	537-551-552-554
184683	REC184683	547-549
184691	RM184691	537-547-551-552-554-549
184765	REC184765	537-547-549-551-552
184778	REC184778	539
188486	REC3581774	395
190187	REC976106	433
191844	REC191844	577

OEM	REF	
192211	REC477024	508
192212	REC192212	508
192426	REC477026	508
213244	REC925066	461
233033	REC11994	422
238258	REC238258	412
241669	REC241669	412
241710	REC841262	413
243621	REC11994	422
243658	REC243658	412
243797	REC243797	413
243799	REC243799	413
243801	RM243801	412
243903	REC243903	413
270136	REC270136	500
270137	REC270137	500
270906	REC270906	500
270907	REC270907	500
271051	REC271051	500
271054	REC271054	500
271063	REC271063	500
271214	REC271214	500
271215	REC271215	500
271217	REC271217	500
271218	REC271218	500
271975	REC271975	433-435
272002	REC272002	499
272004	REC272004	499
272040	REC272040	499
272059	REC272059	499
275052	REC875722	502
275331	REC275331	500
275334	REC275334	499
275336	REC275336	499
275337	REC275337	500
275338	REC275338	500
275340	REC275340	499
275341	REC275341	499
275344	REC275344	499
275350	REC275350	503-509
275369	REC275369	500
275595	REC275751	501
275751	REC275751	501
352835	REC852835	557
358251	MAR512	527
388587	RM3885870	354
416033	REC416033	422-426
418262	REC1378864	483
418361	REC416033	422
418411	REC418411	443-459
418412	REC418412	459
418423	REC1218630	518
418432	REC3517857	359-366
418432	RM3517857	359-366
418445	REC418445	459-527
418737	REC418737	518-520
418870	REC1378911	483
419310	REC419310	480
419628	REC857621	480

OEM	REF	
419643	REC419643	509-518-520
419652	REC3582606	518
419653	REC3582561	518-519
419678	REC419678	482
419734	REC419734	518
419735	REC419735	518
419763	REC419310	480
420641	REC22206133	494
421174	REC1676432	437
421306	REC421306	437
422581	REC469483	462
423135	REC127695-35150	367
423135	RM4785974	367
424299	REC876305	423
424342	REC469846	462
425784	REC425784	539
430017	REC430017	435
430018	REC430018	459
430020	REC430020	459
430039	REC430039	482
430107	REC9139284	480
430143	REC3517857	359-366
430143	RM3517857	359-366
430172	REC430172	458
430272	REC430272	459-461
461056	REC9139284	480
461092	REC1378913	482-512
461113	REC1378914	483
461618	REC9139284	480
462623	REC9139282	480
463225	REC1378879	482
463359	REC1378493	481
463371	REC3582609	518
463377	REC463377	464-467
463395	REC463395	518
463412	REC1378645	480
463505	REC876185	366
463526	REC463526	518
463587	REC1378864	483
463739	REC463739	518-520
463828	REC1674083	451
463829	REC1378492	482
463902	REC463902	508
463903	REC463903	508
463903	REC477024	508
463904	REC192212	508
463905	REC463905	508
466382	REC466382	519
466383	REC466383	519
466384	REC466384	519
466393	REC22206133	494
466634	REC21707134	367
466634	RM466634	367
466987	REC21492771	360
466987	RM21492771	360
468305	REC468305	519
469482	REC469482	506
469783	REC469483	462
469846	REC469846	462

OEM	REF	
471034	REC471034	350-351-367
471034	RM471034	367
471392	REC21707132	368
471392	RM477556	368
471956	REC471956	492
477024	REC477024	508
477026	REC477026	508
477556	REC21707132	368
477556	RM477556	368
478736	REC478736	368
478736	RM478736	368
479956	REC479956	512-513-514-515-517
508932	REC982209	415
508935	REC89825302	415
802399	REC859120	490
803374	REC859015	492
803723	REC840785	451
803762	REC803762	584
804186	REC875512	583
804190	REC804190	581
804693	REC840785	451
804695	REC804695	458
806256	REC831009	452
806341	REC806341	510
806624	REC806624	577
807036	REC807036	462
807078	REC807078	389
807368	JOH10-35157-1	443
807368	JOH10-35157-3	443
813316	RM813316	588
813317	RM813317	588
813967	REC804190	577
813967	REC813967	577-581
814301	REC814301	569
814332	REC814332	555-570
814356	REC814356	555-569
814388	REC814388	555-568
814390	REC814390	555-569
814396	REC814396	555-570
814419	REC814419	555-569
814611	RM814611	588
814612	RM814612	588
814615	RM814615	588
814616	RM814616	588
814626	RM814626	588
814627	RM814627	588
814628	RM814628	588
814631	RM814631	588
814632	RM814632	588
814633	RM814633	588
817377	REC817377	418-420
818035	REC840648	495
818184	REC818184	505
818666	RM829205	429
819720	REC859140	493
819723	REC859140	493
819959	REC819959	452
823661	CM823661	567
823661	CM823661A	567
823661	TEN00716	563
824200	REC3831426	423
824532	HGE4532	483-510-521
824633	REC856044	483
824677	REC824677	380
824912	REC876080	423
824991	REC841893	585
825582	REC855582	429-461
825598	HGE5599	522
825599	HGE5599	510-522
826239	REC826239	450
826341	REC876278	355-555-568
826479	REC908765	380
826493	REC826493	372
827151	REC827151	391
827247	REC827247	458
827250	REC827250	452
828023	REC3587508	433
828026	JOH10-32621-2	439
828140	REC828140	560
828726	REC22314183	400
829161	REC3827069	366-368
829161	RM3827069	366-368
829205	RM829205	429
829207	REC829207	349-469
829214	REC859152	486
829390	REC3827069	368
829390	RM3827069	368
829433	REC829433	444-452
829487	REC829487	495
829531	REC859152	486
829587	REC829587	389
829592	REC829592	463
829714	REC829714	443-459
829895	JOH10-35098-3	441-443
829913	REC829913	349-352-360
829993	REC21492771	360
829993	RM21492771	360
831009	REC831009	452
831040	REC875791	423
831106	REC841893	585
831178	JOH10-32058-1	439-452
831239	REC831239	383
831617	REC831617	459
831622	REC831622	439-459
831778	REC855389	585
831834	RM831834-7	512-522
831931	RM855791	429
831960	RM831960	459
831972	RM856239	464
831986	REC831986	465
832191	REC832191	546
832534	REC832534	555-570
832570	REC832570	540
832598	CM832598	565
832598	CM832598A	565
832598	REC832598	557-558-559
832598	TEN00707	561
832669	REC832669	540-541
832675	REC832675	540-541-545
832820	REC832820	555-568
832831	REC832831	583
832846	REC832846	569
832934	CM832934	566
832934	REC832934	559
832934	REC832934AL	559
832989	TEN00713	563
833070	REC859151	484
833188	REC833188	518
833274	REC833274	484
833323	REC21134777	373
833415	JOH10-35157-1	443
833415	JOH10-35157-3	443
833453	REC859137	484
833522	JOH10-35157-3	443
833583	MAR583	525-527
833598	REC859145	492
833637	REC838637	509-519
833878	REC833878	451
833883	JOH10-35157-1	443
833883	JOH10-35157-3	443
833913	REC833913	560
833913	TEN00719	567
833915	REC833915	560
833915	TEN00720-1	562
833994	REC833994	452
833996	REC833996	458
833997	REC840384	451
834337	REC834337	366-534
834337	RM834337	366
834438	HOT20930	520
834751	REC834751	512-514-528
834871	REC834871	510
834975	REC834975	414
835096	REC17930	474-476
835177	REC876305	423
835304	REC391-5090	415
835308	REC8M6001217	415
835417	REC27-33918	426
835440	REC35-06003	359
835440	RM835440-9	359
835550	REC855694	585
835576	REC35-53336	358
835581	REC835581	426
835702	REC835702	414
835704	REC8M6001249	414
835705	REC8M6001219	414
835779	REC35-06007	359
835804	HOT20931	521
835874	CEF500120T	441
835874	REC10615K	441
835874	SHE10615K	441
835998	REC1463-9382	409
838066	REC838066	490
838127	REC859134	484
838522	JOH10-24130-3	443
838628	REC3582432	486
838638	REC838638	509-519
838652	REC838652	491-509
838653	REC838653	491-509
838654	REC838654	491
838660	REC876099	502
838766	REC838766	462
838807	REC838807	422-425
838929	CM838929	567
838929	CM838929A	567
838929	TEN00714	563
838929	TEN00715	562
839195	REC839195	402-555
839253	REC839253	540-541-545
839423	REC839423	546-570
839534	REC839534	546-570
840074	REC840074	391
840076	JOH10-35157-1	443
840115	REC840115	490
840270	REC3809167	485
840328	REC859094	484
840384	REC840384	451
840385	REC840385	452
840405	REC859093	485
840440	REC859043	490
840442	REC840442	492
840461	REC859044	490
840557	JOH10-24707-01	443
840569	REC840569	484
840572	REC859042	490
840648	REC840648	495
840690	MAR690	524-527
840785	REC840785	451
840902	REC840902	492-527
840930	MAR930	525-527
840944	REC840944	493
840962	REC840962	386
841031	REC27-8079821	380
841054	REC982230	358
841066	REC3854190	393
841161	REC841161	372
841177	REC841177	407
841178	BS2141	408
841243	REC841243	415
841244	REC12532	415
841262	REC841262	413
841263	REC841263	413
841293	REC841294	381-383
841377	REC50-97499A2	394
841600	REC855297	372
841676	HGE6894	521
841676	MAR894	521
841693	REC841693	451
841750	REC841750	346-359
841750	RM841750	359
841812	RM841812	397
841893	REC841893	585
841895	REC855389	585
841926	REC392-9086T	414
841994	REC841994	381-383
842080	REC842080	519
842280	REC842280	365
842586	REC859086	433
842645	REC859065	431
842669	REC859061	428
842744	REC858986	461
842843	JOH10-24061-3	444
842913	REC842913	524-527
842990	REC859038	494
842993	RM21325765	525-527
843228	RM843228	528
843323	REC843323	584
844084	REC859131	433
844971	JOH10-24130-3	443
845189	REC3829313	444
845261	MAR261INOX	526-527
845261	SED3091000	526-527
845291	REC859045	428
845294	REC845294	383
845301	REC859010	433
845353	REC859196	431
845354	REC845354	457
845528	HGE5528	524-527
845585	REC859047	429
846037	REC846037	384
846354	REC3829311	444
846762	REC22637542	407
847573	REC847573	430
847605	REC847605	391
847741	REC847741	350-351-353-367
847741	RM847741	367
849270	REC876069	369
850834	REC850834	399
850888	REC850888	546-560-570-588
850889	REC850889	546-570-588
851407	REC851407	537-547-549-551-552-554-576
851430	REC851430	402-577
851452	REC832846	555
851983	TEN00706	560
852018	CM852018	566
852018	CM852018A	566
852018	REC852018	560
852018	REC852018AL	560

OEM	REF	
852019	REC852019	559
852019	REC852019AL	559
852206	REC3858457	570
852212	REC852212	537-547-549-551-552-554
852565	REC852565	405
852705	REC852705	541-545
852835	CM852835	565
852835	CM852835A	565
852835	REC852835	557-559-577
852835	TEN00708	561
852839	REC852839	404
852868	REC852868	577-581
852904	RM852904	546-547
852928	REC852928	398
852939	REC3819905	408
852984	RM852984-4	402-577
853048	REC853048	555-577
853175	REC853175	555
853223	REC876279	555
853223	REC876279	568
853255	REC75832T	540
853439	RM872612-7	401
853484	REC853484	541
853502	REC3819905	408
853542	REC853542	540
853583	REC23478919	590
853588	REC23478969	590
853655	RM872614	570
853670	REC839253	573
853759	REC853759	402-577
853760	REC853760	402-577
853808	REC853808	537-549-554-576
853846	REC3855650	400
853868	REC853868	537-540-541-543-545-576
853871	REC853808	576
854031	REC832846	555
854031	REC854031	569
854040	REC854040	546-548
854045	REC854045	546-570-588
854047	REC854047	546-570-588
854057	RM872614	570
854100	RM854100	555
854133	RM854133	555
854256	REC21533394	382
854346	REC3586765	398
854531	REC18525A1	399
854541	REC854541	546
854555	RM876632	583
854610	RM872612-7	401
854661	RM854661	541
854666	RM872614	570
854704	RM854704	402-577
854705	RM854705	402-577
854765	REC21924262	589
854766	BVA0990730A	589
854766	REC21924263	589
854767	BVA0990740A	589
854767	REC21924264	589
854768	BVA0990750A	589
854768	REC21924265	589
854769	BVA0990760A	589
854769	REC21924266	589
854770	BVA0990770A	589
854770	REC21924267	589
854771	REC21924268	589
854772	REC21924269	589
854773	REC21924270	589
854814	REC21924262	589
854815	REC21924263	589
854816	BVB0990630A	589
854816	REC21924264	589
854817	BVB0990640A	589
854817	REC21924265	589
854818	BVB0990650A	589
854818	REC21924266	589
854819	BVB0990660A	589
854819	REC21924267	589
854820	BVB0990670A	589
854820	REC21924268	589
854821	REC21924269	589
854932	CEF501001	576
854932	REC22303438	354-576
854935	REC854935	512-514
854977	RM854977	588
854978	RM854978	588
854979	RM854979	588
854981	SOL8832-150-15	587
854982	RM854982	588
854982	SOL8832-150-17	587
854983	RM854983	588
854983	SOL8832-150-19	587
854984	RM854984	588
854984	SOL8832-150-21	587
854986	RM854986	588
854987	SOL8812-150-15	587
854987	SOL8812-158-15	587
854987	SOL8842-156-15	587
854988	SOL8812-148-17	587
854988	SOL8812-155-17	587
854988	SOL8842-156-17	587
854989	SOL8812-145-19	587
854989	SOL8812-153-19	587
854989	SOL8842-156-19	587
854990	SOL8812-143-21	587
854990	SOL8812-153-21	587
854990	SOL8842-156-21	587
854992	RM854992	588
854993	RM854993	588
854994	RM854994	588
854996	SOL8831-150-15	587
854997	RM854997	588
854997	SOL8831-150-17	587
854998	RM854998	588
854998	SOL8831-150-19	587
854999	RM854999	588
854999	SOL8831-150-21	587
855105	CM855105	566
855105	REC855105	559
855105	REC855105AL	559
855297	REC855297	372
855380	HGE7037	522
855380	MAR037	522
855384	HOT20935	523
855387	HOT20930	510-520
855389	REC855389	585
855405	REC855405	428-429
855407	RM856083	429
855409	RM855409	429
855410	RM855410	429
855423	RM855423	429
855428	RM855428	464
855433	RM855433	429
855473	RM856239	464
855506	REC855506	464-467
855507	REC855507	465
855513	REC855513	483
855517	JOH10-32621-2	439
855578	JOH10-32621-2	439
855617	REC855617	585
855648	REC855694	585
855686	REC855686	346-347-356-358
855686	RM855686-2	358
855694	REC855694	585
855728	REC855728	451
855729	REC17980	474-475
855791	RM855791	429
855889	REC823426A1	381-383
855926	HOT20931	521
855952	REC982230	358
855967	REC855967	483-510
856004	REC856004	426
856028	REC856028	510
856033	REC908765	380
856034	REC27-33395	474-514
856036	REC856036	512
856042	REC856042	512
856044	REC856044	483-510
856083	RM856083	429
856116	REC27-99757	512
856137	HGE6894	521
856137	MAR894	521
856239	RM856239	464
856355	REC3819905	408
856365	REC17320	473-475
856472	REC856472	381-383
856513	REC3860703	440
856575	REC17040	477
856609	REC46-8M0113735	433
856616	REC17340	478-518
856626	REC17935	478-479
856659	GS11152	396
856883	HOT20931	514-521
856889	FEL17985	478
856891	HOT20935	514-523
856894	HGE6894	512-521
856894	MAR894	512-521
856895	HGE7037	522
856895	MAR037	522
857037	HGE7037	512-522
857037	MAR037	512-522
857618	REC857618	512-514
857621	REC857621	480
857624	RM857624	404
857633	RACS3228UL	357-358
858065	JOH10-35157-1	443
858150	JOH10-24268-4	443
858464	REC858464	576
858467	REC858467	452-444
858469	JOH10-24277-3	444
858488	REC858488	349-350-365
858503	REC859155	486
858570	REC858570	431
858729	CEF500530	528
858729	RM858955	528
858955	CEF500530	528
858955	RM858955	528
858979	REC858979	430
858986	REC858986	461
858992	REC3583786	486
858993	REC3582432	486
859002	REC859002	527
859010	REC859010	433
859011	REC859011	527
859015	REC859015	492
859027	REC859027	435-437
859032	REC861251	495
859034	REC859034	431
859038	REC859038	494
859039	REC859039	494
859042	REC859042	490
859043	REC859043	490
859044	REC859044	490
859045	REC859045	428
859047	REC859047	429
859055	REC976039	506
859061	REC859061	428
859065	REC859065	431
859086	REC859086	433
859093	REC859093	485
859094	REC859094	484
859107	REC859107	492-525
859111	REC23557470	494
859120	REC859120	490
859131	REC859131	433
859134	REC859134	484
859135	REC859135	485
859136	REC3809167	485
859137	REC859137	484
859140	REC859140	493
859145	REC859145	492
859150	REC859150	486
859151	REC859151	484
859152	REC859152	486
859155	REC859155	486
859194	REC859194	493
859196	REC859196	431
859428	REC859428	373
859494	REC859494	376
859593	REC873549	395
859618	REC859618	406
859642	REC859642	502
859647	REC859647	486
859650	RM859650	518
859656	RM859656	518
859726	REC861603	495
859746	REC861476	367
859746	RM861476	367
859791	REC859791	504
859807	REC859807	505
859834	RM859834	384-385-493-527
859836	REC859836	526-527
859844	REC3582500	373
859851	REC11994	422
859853	REC11994	422
859865	MAR345	525
859945	REC859945	504
859949	REC859949	505
859963	MAR963	524-527
859963	MAR963INOX	526-527
860105	REC20707685	494
860320	REC3582310	373
860339	REC22637542	407
860388	REC860388	350-469
860396	CEF500531	528
860409	RM860409	430
860433	RM860993	392
860434	RM860993	392
860435	RM860993	392
860629	REC3583115	444
860631	REC21880386	430
860656	MAR289	524
860656	MAR289INOX	526
860656	SED3091200	526
860684	REC861250	495
860685	REC861251	495
860749	REC3809167	485
860786	RM3581724	392

OEM	REF	
860827	REC3583115	444
860920	REC860920	430
860993	RM860993	392
861009	JOH10-24707-01	443
861019	REC861019	464
861103	REC861103	376
861250	REC861250	495
861251	REC861251	495
861255	REC861255	377-509
861260	REC861260	383
861263	REC861263	430
861289	MAR289	524-527
861289	MAR289INOX	526
861289	MAR289INOX	527
861289	SED3091200	526-527
861407	REC861407	385
861413	MAR512	525-527
861414	REC861414	385-493-525-527
861431	REC861431	584
861473	REC861473	367
861473	RM861473	367
861474	REC3581621	366
861474	RM3581621	366
861475	REC3581621	366
861475	RM3581621	366
861476	REC861476	367
861476	RM861476	367
861477	REC861477	360
861477	RM861477	360
861563	REC861563	465-467
861564	REC861564	349-350-467-469
861574	MAR345	525
861603	REC861603	495
861657	RM861657	430
861688	REC861688	377-509
861698	REC861698	519-509
861699	REC861699	519-509
861700	REC861700	507-519
861700	REC8631652	519
861725	REC861725	376
861812	RECV11010	451
861822	REC861822	495
861823	REC861823	498
861826	REC861473	367
861826	RM861473	367
861835	REC11994	422
861859	RM861859	518-519
861860	REC861860	507-518
861865	REC861865	484
861906	MAR906	524-527
861906	RM861906	524-527
861906	SED3090900	526-527
861907	REC861907	524-526-527
861911	RM861911	352-424
861954	RM861954	502
861955	RM861955	502
862583	REC124240-01883	452
863169	REC863169	391
863344	REC876185	366
863437	REC3837935	444
863750	REC864315	361
863946	REC863946	392
864315	REC864315	361
865013	REC21325767	525
865295	REC3838207	447
865428	REC865428	384
865545	SED3091400	526
866396	REC3829313	444
866653	REC866653	350-351-469
866835	REC866835	389
866836	REC866836	389
867975	REC876099	502
870690	REC870690	413
872001	SOL8811-150-15	587
872001	SOL8811-158-15	587
872001	SOL8841-156-15	587
872002	SOL8811-148-17	587
872002	SOL8811-155-17	587
872002	SOL8841-156-17	587
872003	SOL8811-145-19	587
872003	SOL8811-153-19	587
872003	SOL8841-156-19	587
872004	SOL8811-143-21	587
872004	SOL8811-153-21	587
872004	SOL8841-156-21	587
872027	RM872027	541
872066	REC872066	390
872082	REC872082	546-570
872096	REC872096	555-556-568
872139	CM872139	557-566
872139	CM872139A	557-566
872139	REC872139	559
872139	REC872139AL	559

OEM	REF	
872241	REC873549	395
872334	REC872334	577
872338	REC872338	577
872362	REC872362	402
872363	RM872363	402
872549	RM872549	547-570
872612	RM872612-7	401
872614	RM872614	547-570
872616	RM881797	392
872722	REC872722	577
872752	REC872752	577
872752	REC872752	555-556-569
872753	REC872753	556
872756	REC872756	556
872793	CM872793	566
872793	CM872793A	566
872793	REC872793	558-559
872793	TEN00717	561
872812	REC872812	402-577
872837	RM3860881	401
872845	REC872845	577
872872	REC3858458	570
872891	REC3858457	570
872986	REC872986	556
873066	REC873066	391
873183	RM873183	555
873228	REC873228	404
873229	REC873229	404
873395	CM873395	566
873395	CM873395A	566
873395	REC873395	558-559
873395	TEN00722	561
873395	TEN00722AL	561
873411	TEN00719-1	567
873412	CM873412	567
873413	CM828140	567
873413	REC873413	560
873531	REC22314183	400
873534	REC873534	556
873740	REC22637542	407
873765	REC21400091	407
873770	REC841769	396
874109	REC3588916	391
874385	REC3827444	394
874501	REC21423488	395
874502	REC874502	396
875031	REC3582597	488
875303	REC875303	505
875306	REC875306	504
875307	REC875307	504
875320	REC875541	502
875331	REC875331	505
875334	REC875334	504
875383	REC875383	455
875387	REC875387	497
875388	REC876417	488
875400	REC876342	483
875402	REC876337	480
875403	REC876306	483
875407	REC875407	381-383
875421	REC875387	497
875438	REC876416	489
875439	REC875439	497
875483	RM875483	503
875485	RM875485	503
875491	RM875491	505
875492	RM875492	505
875498	REC875498	502
875499	REC875499	502
875500	REC876377	487
875501	REC876378	495
875502	REC876377	487
875503	REC876389	496
875504	REC876377	487
875505	REC876388	495
875508	REC876379	487
875509	REC876314	496
875512	REC875512	583
875533	REC876337	480
875541	REC875541	502
875543	REC857621	480
875550	REC875550	501
875551	REC875551	501
875553	REC876376	487
875554	REC876384	496
875561	REC876341	487
875562	REC876381	496
875567	REC876417	488
875569	REC876358	481
875570	REC876337	481
875571	REC15-404	412
875572	REC876380	487
875573	REC876383	496

OEM	REF	
875574	REC875574	455
875575	CEF500170CG	441-442-448-449
875575	JOH09-801B	346-349-441-442-448-449
875575	REC875575	439-441-442-448-449-453-455
875579	REC875579	501
875580	REC875580	346-349-423
875584	REC875584	455
875587	REC876300	481
875588	REC876393	484
875633	REC3582596	489
875634	REC876349	497
875651	REC275751	501
875652	REC875722	502
875655	REC875541	502
875662	REC3582596	489
875676	REC875676	502
875678	REC876301	481
875697	CEF500145T	449
875697	JOH09-814B	449
875697	REC875697	449
875698	REC875698	454
875707	REC875722	502
875715	REC876382	496
875720	REC876391	535-571
875722	REC875722	502
875747	RM875747	505
875747	RM876632	583
875748	RM875748	505
875750	RM875750	503
875751	RM875751	504
875753	RM875753	504
875756	REC875756	455
875757	REC875757	496
875759	REC877373	455
875769	REC875769	455
875773	RM875773	503
875774	RM875774	503
875781	REC876080	423
875783	REC875783	349-424
875785	REC875785	349-351-352-424
875788	REC3831426	423
875790	REC876080	423
875791	REC875791	423
875794	REC876305	423
875795	RM875795	352-424
875796	REC875796	349-423-424
875805	CMV-17	546-565
875805	CMV-17A	565
875805	REC875805	560
875805	REC875805AL	560
875807	CEF500100GX	441
875807	JOH09-806B	441
875807	REC3586494	441
875809	CMV-16	565
875809	REC875809	560
875809	REC875809AL	560
875810	CMV-15	557-565
875810	REC875810	560
875810	REC875810AL	560
875812	CM875812	565
875812	CM875812A	565
875812	REC875812	560
875812	REC875812AL	560
875814	CEF500145T	449
875814	JOH09-814B	449
875814	REC875697	449
875815	CMCMV-18	546-557-565
875815	CMCMV-18A	546-557-565
875815	REC875815	560
875815	REC875815AL	560
875821	CM875821	565
875821	CM875821A	565
875821	REC875821	546-547-557-558-559-560
875821	REC875821AL	546-547-557-558-559-560
875821	TEN00704BIS	560
875822	CEF501011	583
875822	REC875822	354-583
875826	CEF500510K	582-583
875826	REC876294	582-583
875826	RM876294	582-583
875827	REC875512	583
875848	CEF500505K	582
875848	REC876631	582
875848	RM876631	582
875849	REC3831424	422
876022	REC876302	481
876023	REC876448	484
876032	REC876427	497
876037	REC876037	407

OEM	REF	
876054	REC876054	496
876069	REC876069	369
876070	REC876069	369
876071	REC876303	481
876072	REC876304	484
876073	REC876073	575
876080	REC876080	423-424
876081	REC875574	455
876088	REC877373	455
876097	REC876080	424
876099	REC876099	502
876103	REC3582435	488
876104	REC3583787	489
876106	REC876774	498
876108	REC3582563	494
876114	REC876114	502
876120	CEF500104	347-440-442
876120	REC22120-0001	346-347-442
876121	REC3582435	488
876128	REC3831424	422
876144	REC876144	493
876161	REC876161	502
876185	REC876185	366
876224	REC22011	460
876261	REC22389354	502
876266	REC876266	540-541-574
876267	REC876267	547-573
876268	REC876268	573
876279	REC876279	568
876286	CM851983	565
876286	CM851983A	565
876286	REC23172849	546-557
876286	REC876286AL	535-559-560
876286	TEN00706	560
876294	CEF500510K	582-583
876294	REC876294	354-540-541-582-583
876294	RM876294	582-583
876300	REC876300	481
876301	REC876301	481
876302	REC876302	481
876303	REC876303	481
876304	REC876304	484
876305	REC876305	423
876306	REC876306	483
876307	REC876307	484-487
876308	REC876308	484-487
876310	REC876310	485-487
876312	REC3582563	494
876314	REC876314	496
876317	REC3855650	400
876335	REC876337	480
876337	REC876337	480
876341	REC876341	487
876342	REC876342	483
876349	REC876349	497
876356	REC876356	480
876358	REC876358	481
876359	REC876337	481
876362	REC876774	498
876374	REC876377	487
876375	REC876377	487
876376	REC876376	484-487
876377	REC876377	487
876378	REC876378	495
876379	REC876379	487
876380	REC876380	487
876381	REC876381	496
876382	REC876382	496
876383	REC876383	496
876384	REC876384	496
876388	REC876388	495
876389	REC876389	496
876391	REC876391	535-571
876392	REC3888917	575
876393	REC876393	484
876395	REC3582596	489
876398	REC3582595	494
876416	REC876416	489
876417	REC876417	488
876427	REC876427	497
876430	REC876431	487
876431	REC876431	487
876433	REC876393	484
876448	REC876448	484
876453	REC3582597	488
876507	REC872096	355-568
876511	REC876511	506-509
876512	RM876512	506-509
876515	REC876515	505-509
876516	REC876516	505-509
876519	REC876519	505-509
876520	REC876520	505-509
876527	REC22185019	502
876529	REC877373	455
876530	REC3583787	489
876531	REC876774	498
876544	REC876794	438
876548	REC876548	502
876554	REC876554	349-361
876560	REC876793	438
876588	REC876588	575
876611	REC876548	502
876614	REC876614	405
876631	CEF500505K	577-582
876631	REC876631	354
876631	REC876631	540
876631	REC876631	577
876631	REC876631	582
876631	REC876631	556
876631	RM876631	577-582
876632	RM876632	354-577-583
876633	CEF500505FL	582
876633	REC876633	354-540-582
876633	RM876633	582
876638	CM876638	557-566
876638	REC876638	559
876638	REC876638AL	559
876655	REC876655	497
876657	RM876657	504
876658	RM876658	504
876660	RM876660	505
876661	RM876661	505
876663	RM876663	505
876664	RM876664	505
876666	RM876666	504
876667	RM876667	504
876669	RM876669	506
876670	RM876670	506
876672	RM876672	506
876680	RM876680	506
876682	RM876682	506
876683	RM876683	506
876685	RM876685	506
876686	RM876686	506
876689	CEF500100GX	441
876689	JOH09-806B	441
876689	REC3586494	441
876774	REC876774	498
876783	REC857621	480
876784	REC22389354	502
876793	REC876793	438
876794	REC876794	438
876797	REC876080	423
876809	REC3837935	444
876819	REC22389354	502
876834	REC22389354	502
876851	REC22185027	502
876853	REC3583786	486
877071	REC22185019	502
877072	REC861700	507-519
877072	REC8631652	519
877073	REC861700	507-519
877073	REC8631652	519
877349	REC877349	349-424
877355	REC877355	352-424
877373	REC877373	455
877387	RM877387	504
877388	RM877388	506
877419	REC877419	497
877765	REC982230	358
881797	RM881797	392
885163	REC91-888863	420
885195	REC885195	590
888596	REC888596	525-527
888624	RM888624	353-425
889419	REC889419	362
889422	REC889422	362
889425	REC3831424	422
889455	REC889455	539
889486	REC889486	491
889672	REC889672	535
889970	REC889970	377
892260	REC829620	518
897321	REC834337	366
897321	RM834337	366
897322	REC859145	492
897367	REC897367	546-570
897426	REC897426	546-576
897682	REC897682	355-540-541
897726	REC897726	581
897816	REC3856008	584
897889	CEF500510K	582-583
897889	REC876294	582-583
897889	RM876294	582-583
905052	REC925052	541
906633	REC906633	575
913928	REC9139284	480
914462	REC914462	437-581
914515	REC914515	452
914533	REC914533	581
925050	REC925050	402-577
925054	REC925054	535
925055	REC925055	461
925060	REC949657	462
925062	REC949721	431-433
925064	REC925064	577
925065	REC949659	462
925066	REC925066	461
925067	REC948610	429
925068	REC925068	461-462
925091	REC975672	429
925093	REC925093	443-537-540-541-543-544-545
925096	REC925096	461
925255	REC925255	461
925256	REC925256	535-540-545-546-547-556-573-577
925258	REC925258	547
925259	REC925259	539-552-553-554-555-556-573
925260	REC925260	534-539
925261	REC925261	546
926033	REC955976	459-492
940096	REC1275379	378
940136	REC940136	512-514
940191	REC940191	556
940191	REC940191	539-555
941807	REC941807	541
941816	REC941816	540
941820	REC941820	555
941870	REC958860	581
941907	REC941907	535
941907	REC941907	512-514
942336	REC942336	512-514
942547	REC942547	512-514
942615	REC942615	540
942791	REC942791	537
944988	REC944988	378
945624	REC945624	539
946056	REC946056	579
946242	REC946242	581
946438	REC946438	537-549-551
946729	REC947620	378
947620	REC947620	378
947622	REC947622	378
947627	REC947627	378
947893	REC947893	463
947894	REC997641	463
947904	REC947904	577
948255	REC948610	429
948610	REC948610	429-461
949187	REC949187	492
949656	REC949656	534-537-544
949657	REC949657	462
949658	REC949658	433
949659	REC949659	462
949721	REC949721	431-433
949722	REC949722	433
949841	REC949841	494
949918	REC997641	463
951924	REC951924	540-541-543
951936	REC951936	539-544
952141	REC57-96834Q	468
952980	REC952980	528
955103	REC463902	508
955893	REC955893	549-551-554
955974	REC955974	355-535-540-541-546-547-573
955976	REC955976	459-492
955981	REC955981	355-509-537-549-551
955988	REC976018	378
955989	REC955989	355-534-540-541
956000	REC956000	540-541-545-573
956590	REC956590	541
957170	REC957170	378
957171	REC957171	378
957181	REC957181	378
957184	REC957184	378
958481	DAY17305	469
958860	REC958860	581
959794	REC959794	514
959796	REC959796	512
960166	REC960166	457
964106	REC964106	428
966207	REC966207	402-577
966382	REC966382	346-467
966383	REC966383	349-468
966387	REC966387	469
966694	REC966694	346-467

OEM	REF	
966698	REC966990	468
966700	REC3858462	468
966707	REC966707	349-468
966870	GDY15386	352-469
966891	REC966891	346-467
966900	REC966900	352-469
966903	REC966903	352-469
966906	REC3852106	468
966906	REC966906	349-350-352-468-469
966912	RM966912	349-469
966914	REC966914	468
966916	REC3852106	468
966929	GDY15545	349-468
966931	REC966931	349-468
966933	REC966933	349-468
966942	REC966942	349-468
966953	RM966953	351-469
966958	GDY15335	351-469
966974	REC57-36356	351-469
966978	REC966978	349-350-469
966990	REC966990	468
967111	REC967111	346-347-467-468
967114	RM967114	352-353-469
967158	GDY17291	467
967191	RM967191	347-468
967193	RM967193	350-351-469
967344	REC967344	445-537-541-543-544-545
967643	REC969198	492
967707	REC967707	556
967763	REC969331	458
967944	REC967944	493
968048	REC968048	395
968555	REC968555	459
968927	REC968927	422-460
968955	REC968955	508
969011	REC969011	378
969071	REC969071	546-547
969073	REC969073	546
969198	REC969198	492
969331	REC969331	458
969415	REC969415	433-527
973534	RM973534	352-469
973593	REC973593	545
973639	REC973639	450
975309	REC975309	433
975672	REC975672	429
976018	REC976018	378-534
976039	REC976039	506
976041	REC976041	433
976051	REC976051	428
976106	REC976106	433
976483	REC976483	350-469
977313	RM977313	402-555-577
977542	REC977542	349-350-469
978454	RM978454	347-468
978457	GDY15295	468
978482	REC978482	352-469
978750	REC978750	346-347-467-468
979254	REC979254	556-569
980936	REC976039	506
981183	REC981183	378
981650	REC3855276	372
981965	RM981965	540-541
984068	REC984068	541-545
984222	REC984222	539
984223	REC984223	539
984224	REC984224	539
984225	REC984225	539
990899	REC990899	569
993436	REC947622	378
994130	REC994130	508
997368	REC997368	544
997641	REC82745	510
1161995	REC1161995	591
1218022	REC957181	378
1218630	REC1218630	519
1266286	REC3517857	359-366
1266286	RM3517857	359-366
1266796	REC1378879	482
1275148	REC271975	433
1275379	REC1275379	378
1275549	RM3883844	494
1276425	REC1276425	498
1276817	REC1378493	481
1306169	REC1306169	413
1306341	REC1306341	508
1306341	REC994130	508
1306630	REC1306630	507-509-518
1317466	REC416033	422
1317761	REC1317761	508
1317792	REC1317792	518
1317793	REC1317793	518

OEM	REF	
1324492	REC1324492	407
1324750	REC1324750	389
1326239	REC1317761	508
1326785	REC1378646	480
1332644	REC1378646	480
1336385	REC1336385	390
1336753	REC1378870	482
1336763	REC1336763	508
1357775	REC1674083	451
1359649	REC1359649	531
1376344	REC1378491	435
1378491	REC1378491	435
1378492	REC1378492	482
1378493	REC1378493	481
1378646	REC1378646	480
1378853	REC1378853	482
1378854	REC1378854	482
1378864	REC1378864	483
1378870	REC1378870	482
1378879	REC1378879	482-510
1378909	REC1378909	482
1378911	REC1378911	483
1378913	REC1378913	482
1378914	REC1378914	483
1378960	REC3582608	518
1504952	REC1504952	406-407
1542052	REC1542052	492
1542123	REC1542123	493
1542157	REC1542157	378
1542158	REC1542158	378
1542159	REC1542159	378
1542170	REC3582310	373
1542177	REC1542123	493
1542187	REC1542187	422-426
1542198	REC3583913	422-457
1542219	REC859039	494
1542229	REC859027	435
1542247	REC861251	495
1542263	REC968955	508
1542287	RM1542287	491-509
1542289	REC859034	431
1542318	REC1542318	498
1542385	REC976039	506
1542389	REC1542389	509-518
1542472	REC1542472	509-518
1544109	REC859150	486-509
1544119	REC1544119	491-509
1544124	REC861250	495
1545198	REC1545198	509-518-519-520
1545283	REC1676432	437
1660609	REC1660609	437
1665251	REC21192875	369
1665527	REC1676432	437
1674032	REC1676432	437
1674083	REC1674083	451
1674084	REC1674083	451
1676432	REC1676432	437
2170344	CEF500105T	448-449
2170344	JOH09-1029B	350-448-449
2170344	REC21730344	448
2194262	REC21924262	589
2850245	MP426422	379
3183211	REC3183211	519
3183241	REC85104134	377
3287677	REC3287677	409
3501530	REC3501530	375
3514432	REC3514432	507
3517857	REC3517857	359-366
3517857	RM3517857	359-366
3517860	REC3517893	507-518
3545696	REC3545696	389
3547560	REC271975	433
3555413	CEF500380	448
3578536	RECV11010	451
3580026	REC3580026	498
3580064	REC3593654	445
3580096	REC861477	360
3580096	RM861477	360
3580100	REC3580100	373
3580222	REC3593655	445
3580223	REC3593655	445
3580227	REC3580227	495
3580234	REC3580234	485
3580303	RM3580303	518
3580304	RM3580304	518-519
3580305	REC22393048	507-518
3580306	REC22393048	507
3580309	REC3580309	485
3580337	RM3580337	503
3580338	RM3580338	503
3580365	RM3580365	352-424
3580380	REC3580380	452
3580478	RM21186281	519

OEM	REF	
3580482	REC3584202	485
3580509	REC3580509	352-353-366
3580510	REC3580510	366
3580514	REC3580514	426
3580546	RM3580546	503
3580547	RM3580547	503
3580586	REC3580586	498
3580629	REC11994	422
3580742	REC3583786	486
3580835	REC3580835	469
3580900	REC3593654	445
3580910	REC3593655	445
3580917	REC3580380	452
3580920	REC3593655	445
3580944	REC3593654	445
3580945	REC3593655	445
3581062	RM3581724	392
3581114	RM3581114	528
3581115	RM3581115	528
3581150	REC3802092	384
3581460	RM3581460	349-469
3581528	REC3581528	384
3581536	REC3581536	377-509
3581558	REC3583115	444
3581570	REC23557470	494
3581621	REC3581621	366
3581621	RM3581621	366
3581696	REC3581696	376
3581714	REC22185027	502
3581724	RM3581724	392
3581755	REC3802105	384
3581760	REC3581760	362-364
3581774	REC3581774	395
3581868	REC21165389	486
3581869	REC21165390	486
3581889	REC3581889	519-520
3582310	REC3582310	373
3582324	REC3582324	465-467
3582358	REC21646645	365
3582432	REC3582432	486
3582433	REC3583786	486
3582434	REC3582435	488
3582435	REC3582435	488
3582436	REC3583787	489
3582437	REC3583788	489
3582458	REC3582500	373
3582500	REC3582500	373
3582512	MAR512	525
3582561	REC3582561	509-520
3582563	REC3582563	494
3582595	REC3582595	494
3582596	REC3582596	489
3582597	REC3582597	488
3582606	REC3582606	520
3582608	REC3582608	520
3582609	REC3582609	520
3582639	REC3582639	430
3582676	REC23557470	494
3582692	REC22171036	465
3582694	REC22774756	465
3582725	REC3582725	492
3582732	REC3582732	368
3582732	RM3582732	368
3582748	REC3582748	498
3582768	REC3802149	385
3582769	REC3802150	385
3582851	REC860971	498
3582887	REC3582887	535
3582888	REC3582888	535
3582986	REC21457172	430
3583006	REC3802125	384
3583073	REC3583073	376
3583078	REC3583078	378
3583087	REC3583087	437-438
3583089	REC3583089	445
3583115	REC3583115	444
3583322	REC3583322	535
3583336	REC3583336	492
3583338	REC21457172	430
3583443	REC3583443	361
3583443	RM3583443	361
3583546	REC3583546	491
3583555	REC21323043	394
3583647	REC3583647	428
3583654	REC21702999	366
3583665	REC22774756	465
3583693	RM3583693	503
3583700	REC3583700	498
3583729	RM21405494	353-467-469
3583780	REC3583780	426
3583786	REC3583786	486
3583787	REC3583787	489
3583788	REC3583788	489

OEM	REF	
3583840	REC3583840	430
3583856	MAR701INOX	526
3583902	MAR847INOX	526
3583913	REC3583913	422-437-457
3583915	REC21450768	526
3584053	REC3802151	386
3584062	REC3584062	446-456
3584063	REC21380890	446
3584086	RM3584086	353-469
3584126	REC21132189	373
3584127	REC3584127	405
3584138	REC3802152	386
3584144	REC3584144	369
3584145	REC3584145	353-369
3584167	REC3584167	526-528
3584168	REC3584168	526-527-528
3584202	REC3584202	485
3584442	REC2394207AL	561
3584442	REC3584442	561
3586461	REC3586461AL	557-559
3586494	CEF500100GX	441-448
3586494	JOH09-806B	441-448
3586494	REC3586494	441-448
3586722	REC3817861	502
3586758	REC876775	503-509
3586765	REC3586765	398
3586765	REC852928	398
3586857	REC22582994	503
3586871	RM3586871	504
3586873	RM3586873	504
3586877	RM3586877	504
3586960	REC3586960	498
3587046	REC21655254	430
3587071	REC3587071	396
3587072	RM3587072	396
3587079	REC3587079	398
3587159	SED3091600	526
3587216	REC874502	396
3587410	REC859836	526
3587508	REC3587508	433-435
3587597	REC3587597	347-348-423
3587651	RM3587651	511-513-515-516-517-578
3587858	RM3885250	464
3587859	RM3885250	464
3587927	REC3843100	390
3588305	REC22171036	465
3588378	REC3840335	360
3588378	RM3840335	360
3588432	REC21371112	488
3588433	REC21371111	489
3588434	REC3588434	497
3588435	RM3588435	385-386-493
3588437	RM3588437	425
3588475	CEF500114T	353-448-449
3588475	JAB17937-0001-P	446-448-449
3588475	REC17937-0001	448-449
3588491	REC21423488	395
3588683	MAR684	522
3588684	MAR684	511-522
3588745	CM3588745	565
3588745	CM3588745A	565
3588745	REC3588745	557
3588746	CM3588746	566
3588746	CM3588746A	566
3588746	REC3588746	557
3588746	TEN00733	562
3588748	REC3588746AL	557
3588748	TEN00733	562
3588750	TEN00733	562
3588753	CEF500538K	354-582
3588770	REC3588745AL	557-558-559
3588770	REC852835AL	557-558-559
3588865	RM3588865	374
3588879	REC803356	498
3588916	REC3588916	391
3589104	REC22905155	447
3589316	REC3840525	367
3589316	RM3840525	367
3589322	REC3589322	486-488
3589522	REC3589522	543
3589524	REC3589524	543
3589544	MAR345	525
3589554	REC3883845	490
3589875	REC3888814	557
3589907	REC21380890	446
3593573	CEF500177GT	448
3593573	JAB17018-0001	448
3593573	REC3593573	448
3593654	REC3593654	445
3593655	REC3593655	445
3593656	CEF500116GX	448
3593656	JOH09-1026B	448
3593656	REC21141637	445
3593656	REC3593659	448
3593663	REC3593663	535-576
3593951	REC3593951	531
3593981	CM3593881	534-557-567
3593981	CM3593881A	567
3593981	REC3593981	559-558-560
3593981	REC3593981AL	557-558-559-560
3594159	REC21655254	430
3594161	REC21655254	430
3594444	RM21608511	374
3594509	CEF500537K	582
3594509	REC3808898	354-582
3594785	REC21608512	374
3594989	REC3594989	400
3599981	TEN00738	562
3660566	REC50-863007A1	393
3762385	REC22273952	584
3779955	REC22187385	401-402
3779955	REC22187386	401
3801204	REC3848965	395
3801296	REC21423488	395
3801351	REC21323043	394
3801404	REC3801404	437
3801636	REC3801404	437
3803577	REC3884858	396
3803645	REC8676498	396
3803648	REC21423488	395
3803650	REC874502	396
3803846	REC874502	396
3803855	REC21423488	395
3803903	REC874502	396
3803904	REC3840888	395
3803911	REC874502	396
3803929	REC21323043	394
3803938	REC21423488	395
3803940	REC3884858	396
3804296	REC21423488	395
3807212	REC21325767	525
3807400	REC3807400	560
3807400	REC3807400AL	560
3807613	RM3807613	537-540-541-543-544-545
3808228	REC3808228	578-579
3808516	REC892617	388
3808536	CEF500538K	582
3808602	REC3808602	485
3808605	REC861473	367
3808605	RM861473	367
3808616	REC3808616	361-391
3808796	REC21250645	389
3808797	REC3808797	389
3808898	CEF500537K	582
3808898	REC3808898	539-582
3809070	REC21457172	430
3809071	REC21457172	430
3809093	REC21655254	430
3809097	REC21655254	430
3809167	REC3809167	485
3809445	REC3809445	590
3809465	REC21280913	465
3809559	REC21721548	405
3809560	REC21721550	405
3809625	RM3809625	353-469
3809647	REC3809647	485
3809657	REC3809657	491
3809662	RM3809662	519
3809721	REC3809721	361
3809911	REC3801138	386
3812109	REC3812109	485
3812131	REC3812131	491
3812159	RM3812159	353-469
3812199	REC3812199	485
3812240	REC3812240	440-450
3812269	RM3858128	529
3812357	REC3812357	534-573
3812472	RM3812472	503
3812474	RM3812474	503
3812518	REC21212800	441
3812519	REC21212799	440
3812520	RM21255090	440
3812522	RM21212798	439
3812693	REC21214599	439
3812695	REC21214601	440
3812696	RM21214595	439
3812697	RM21214596	440
3817033	REC3817033	503-509
3817034	REC22185027	502
3817092	REC40970	395
3817328	REC3817328	374
3817466	SOL8611-150-15	587
3817466	SOL8613-148-15	587
3817466	SOL8641-155-15	587
3817467	SOL8611-148-17	587
3817467	SOL8613-145-17	587
3817467	SOL8651-148-17	587
3817468	SOL8611-145-19	587
3817468	SOL8613-143-19	587
3817468	SOL8651-148-19	587
3817469	SOL8611-143-21	587
3817469	SOL8613-140-21	587
3817469	SOL8651-145-21	587
3817470	SOL8611-142-23	587
3817470	SOL8642-145-23	587
3817471	SOL8612-150-15	587
3817471	SOL8614-148-15	587
3817471	SOL8642-155-15	587
3817472	SOL8612-148-17	587
3817472	SOL8614-145-17	587
3817472	SOL8652-148-17	587
3817473	SOL8612-145-19	587
3817473	SOL8614-143-19	587
3817473	SOL8652-148-19	587
3817517	RM3817517	361
3817687	REC3817687	439-450
3817688	REC3817688	440-450
3817861	REC3817861	502
3818541	REC21702999	366
3818912	REC3818912	435
3819016	REC21450768	526
3819485	REC21380886	447
3819662	REC874502	396
3819905	REC3819905	408
3825038	REC3825038	350-365
3825133	REC21492771	360
3825133	RM21492771	360
3825493	REC3837935	444
3826841	SED3091400	526
3827069	REC3827069	366-368
3827069	RM3827069	366-368
3827167	RM3838952	365
3827273	REC3827273	469
3827444	REC3827444	394
3828838	RM3817517	361
3829311	REC3829311	444
3829312	REC3829313	444
3829313	REC3829313	444
3829668	SED3091400	526
3830004	REC876069	369
3830459	CEF500163G	448
3830459	JAB17938-0001-P	442-447-448
3830988	SED3091400	526-527
3831236	REC3831236	367
3831424	REC3831424	422-424
3831425	REC3831425	349-350-351-352-424
3831426	REC3831426	423-424
3836314	REC21380886	447
3837935	REC3837935	444
3838207	REC3838207	447
3838288	REC3838288	446-456
3838942	REC21325767	525
3838952	RM3838952	365
3839110	REC3839110	350-351-424
3839469	RM3817517	361
3840181	REC874502	396
3840335	REC3840335	360
3840335	RM3840335	360
3840525	REC3840525	367
3840525	RM3840525	367
3840761	REC3840761	579
3840816	REC3840816	353-425
3840842	REC3840842	485
3840843	REC21192973	486
3840859	REC3840859	495
3840888	REC3840888	395
3841011	REC3841011	579
3841013	REC3841013	579
3841080	REC861477	360
3841080	RM861477	360
3841366	RM3841366	406
3841427	REC3888817	557
3841481	CEF500514K	582
3841481	REC3841481	578
3841481	REC3841481	582
3841482	RM21277185	583
3841510	SED3091600	526
3841697	CEF500106GT	449
3841697	JOH09-1028B	449
3841697	REC3841697	449
3841840	REC21484383	400
3842015	RM3842015	353-424
3842442	REC3887328	389
3842853	REC3842853	513-515-523
3843100	REC3843100	390
3843136	REC3843136	539
3843471	REC21256410	584

OEM	REF	
3843751	REC3843751	387
3843854	REC3843854	386
3847392	REC3801270	385
3847393	REC3801271	385
3847481	REC22171036	465
3847482	REC3847482	465
3847499	MAR499	513-521
3847501	MAR501	515-521
3847644	REC3847644	347-348-358-374
3847644	RM3847644	358
3848896	REC21280913	465
3848965	REC3848965	395
3849006	REC3849006	539
3849411	REC3863007	400
3849413	REC3863007	400
3850064	REC1674083	451
3850268	REC3850268	468
3850305	SOL8651-140-24	587
3850315	SOL8652-140-24	587
3850357	REC806612T	388
3850360	REC3850360	423-436
3850396	REC3850396	387
3850397	REC3850397	390
3850426	CEF500528	578-582
3850426	REC3850426	354-355-578-582
3850430	RM3850430	347-468
3850491	RM3888323	530
3850492	RM3888323	530
3850495	REC3850495	511
3850525	REC50-99418A2	393
3850559	REC3850559	359
3850559	RM3850559	347-359
3850594	REC3850594	543-575
3850683	RM3885196	401
3850740	REC22-73379	513-515-516-517
3850794	RM3858873	522
3850796	RM3858873	522
3850799	BAOMC20-910380	511-522
3850802	REC13980	511
3850809	REC3858261	375
3850812	REC3850812	543-544
3850813	REC393831	543
3850814	REC3850814	543
3850815	REC59830A7	543
3850852	REC3850852	534-537-540-541-543-544-545
3850853	REC183247	537
3850913	REC3855271	523
3850942	REC3850942	548
3850984	REC22188	571
3850984	REC22189	571
3850984	REC398042	548-571
3851218	REC3862228	358
3851218	RM3862228	358
3851227	BAOMC-20-3862603	522
3851334	RM3851334	547
3851482	RM3851482	589
3851483	RM3851483	589
3851623	SHEG9901	440
3851982	SHEG9903	440
3852002	REC13-35048	513-515-516-517
3852020	REC126870	548-571
3852030	REC35-06003	359
3852030	RM835440-9	359
3852044	REC25-33145	578
3852045	REC3852045	355-543-544-545-579
3852056	REC3852056	355-548-571
3852071	REC0307239	426
3852096	REC27-8146801	426-435
3852106	REC3852106	468
3852111	REC27-33918	426-436
3852135	REC22-428611	513-515-516-517
3852142	REC3852142	511
3852165	REC3852165	403
3852169	REC331188	578
3852215	REC3852215	389
3852217	REC300-00879	409
3852224	REC40155	358
3852268	RM3852268	546-547-548-549-551-552-553-554
3852272	REC3852272	537-543-544
3852279	REC3852279	543
3852288	RM3852288	436-463
3852289	RM3852289	435-463
3852295	REC3852295	537-543-544-545
3852296	REC3852296	537-541-543
3852315	REC3852315	548-549-551
3852317	REC3852317	543
3852325	REC3856008	584
3852329	REC22336734	537
3852336	REC3852106	468
3852338	MAR499	521
3852347	BAOMC1-3852347	516-521

OEM	REF	
3852348	GDY15382	468
3852350	REC3852350	548-571
3852352	REC3852352	578-583
3852362	RM3861459	521
3852374	MAR501	521
3852390	RM3852390	537-540-541-543-544-545
3852398	SHEG9901	440
3852399	SHEG9903	440
3852412	REC35-06003	359
3852412	RM835440-9	359
3852413	REC3862228	358
3852413	RM3862228	358
3852418	RM3852418	543
3852454	REC3852454	543
3852455	REC3852455	472-476-516
3852464	REC3852464	468
3852467	REC3852467	513-515
3852468	REC27-33395	515
3852472	REC27-46820	517
3852472	REC27-46820	478-479
3852476	REC3852476	516
3852477	REC27-34897	435-436
3852504	RM3852504	468
3852516	RM3852516	543
3852523	REC332583	578
3852535	REC3852535	578
3852537	REC309731	578
3852538	REC3852538	511-512-513-514-515-517-578
3852550	REC3852550	578
3852551	REC3852551	578-579
3852555	REC3852555	400-579
3852558	REC3852558	579
3852560	REC3852560	355-543-578
3852565	REC997368	537
3852565	REC997368	543
3852568	REC3852568	543
3852573	RM3852573	403
3852602	REC3852602	516
3852604	GS38320	511-5213-515-516-517
3852607	RM3852607	347-468
3852648	REC11-859135	403-543-544-578-579
3852687	REC17931	474-476
3852696	REC3852696	513-515-516-517-528
3852824	REC27-56880	434-436
3852830	REC3852830	513-515-516-517
3852865	REC3852865	537-548
3852866	REC3852866	548-549-551-552-553-554
3852958	RM3852958	403
3852959	REC3852959	548-548-551
3852970	CM3852970	566
3852970	CM3852970A	566
3852970	REC3852970	559
3852970	REC3852970AL	559
3853155	REC10-37612	516
3853226	REC70817B	507
3853256	REC27-815528	471-511
3853283	REC3853283	380-511
3853341	REC3853341	474-476
3853342	REC27-33956	434-435
3853361	REC27-49110	435
3853373	REC16-70236	511
3853378	REC3853378	511
3853380	REC17020	473
3853380	REC17030	474
3853404	REC46335	511-513-515-516
3853412	REC27-99757	513
3853423	REC3853423	403-543-578
3853424	RM3853424	403-543
3853430	REC3853430	511
3853431	REC3853431	511
3853434	REC3853434	516
3853510	FEL17986	478-479
3853511	REC17042	477
3853513	REC17937	478-479
3853521	REC26-75988	507
3853536	REC3853536	468
3853567	REC3855269	523
3853568	REC3855271	523
3853587	REC17048	478
3853608	RM3853608	528
3853628	REC3853628	511
3853787	REC806490T	390
3853796	REC3853796	434-436
3853799	REC3853799	347-423
3853801	REC3853801	414
3853804	REC3853804	531
3853815	REC392-9766	414
3853825	RM3853825	404
3853839	REC3853839	405

OEM	REF	
3853850	REC46-8M0113734	434-435-436
3853854	REC3853854	403-405
3853855	REC3853855	403-405
3853856	REC3853856	403-404
3853857	REC3853857	403-404
3853862	REC3853862	585
3853915	RM3858873	522
3853917	REC3858437	585
3853934	REC3853934	548-553
3853945	REC3853945	399
3853962	REC3853962	585
3853982	REC50-99418A2	393
3853983	REC3853983	347-348-423
3854001	REC3854001	410-420
3854002	REC3854002	409
3854002	REC500442	420
3854003	REC3854003	410-420
3854017	REC46-8M0113733	433
3854018	REC3854018	381-383
3854019	REC984491	358
3854020	REC3854020	379-382-383
3854045	HGE8870	520
3854045	MAR870	520
3854053	REC3854053	372
3854077	REC3854077	419
3854084	REC84-817376T01	420
3854086	RM21610333	379
3854100	MP425113	518
3854105	REC3854105	379-382-383
3854106	REC1396-4656	382-383
3854107	REC1396-5238	382-379-383
3854118	REC46-8M0113735	433
3854127	CEF500514K	582
3854127	REC3841481	582
3854130	CM3854130	566
3854130	CM3854130A	566
3854130	REC3586461AL	578
3854130	REC3854130	557-559
3854130	REC3854130	558-578
3854130	TEN00718	561
3854138	REC3854138	406
3854159	REC3854159	390
3854161	REC3854161	409
3854164	BS2142	408
3854186	BS2143	408
3854190	REC3854190	393
3854194	REC0987883	393-406
3854217	REC3854217	418
3854218	REC3854218	418
3854247	REC3854247	402
3854249	REC31-66668A1	535-537-548-549-551-552-553-554
3854250	REC31-86748A1	548-549-552-553-554
3854254	BAOMC29-910303	435
3854260	REC3854260	416-420
3854261	REC3854261	416-420
3854286	CEF500103T	441-442
3854286	REC3854286	441-442
3854286	SHE09959K	346-347-441-442
3854311	REC3854311	416-420
3854331	REC3854331	416-420
3854346	MP426422	379
3854427	REC3855269	523
3854428	REC3855271	523
3854466	MAR061	523
3854480	REC3854480	537-543º
3854512	REC8M0077616	388
3854527	REC805223T	390
3854539	REC22-67892A05	535-543-544-548-552-553
3854548	REC3854548	417-420
3854549	REC3854549	420
3854595	REC3854595	548-549-551
3854601	REC3854601	551
3854624	REC3854624	549-551
3854625	REC3854625	549-551
3854643	RM3854643	347-468
3854750	REC50-806965A4	393
3854809	REC3860769	397
3854842	REC3594989	400
3854858	REC8M0073435	372
3854874	RM3854874	513-523
3854905	REC3854905	388
3854956	REC26-34217	507
3854956	REC26-34217	507
3855017	REC3855017	381-383
3855079	SHEG9903	440
3855081	REC3855081	355-543-544-545-548-552-553-554
3855182	REC3855182	376
3855184	REC8M0125617	387
3855185	REC3855194	387
3855194	REC3855194	387

OEM	REF	
3855269	REC3855269	516-523
3855270	MAR061	523
3855271	REC3855271	516-523
3855275	REC3855275	548-574
3855276	REC3855276	372
3855279	MP426574	379
3855281	RM3858873	522
3855296	REC803148	387
3855409	REC9139284	480
3855411	CM3855411	566
3855411	CM3855411A	566
3855411	REC3855411	560
3855411	REC3855411	548-549-551-557-558-559
3855411	TEN00726	560
3855411	TEN00726AL	560
3855535	REC3863007	400
3855650	REC3855650	400
3855778	SHEG9901	440
3855805	MP425024	518
3855806	MP425036	518
3855957	MP426766	379
3855983	REC10-37612	516-517
3855991	REC46-8M0113735	433-436
3856002	REC3856002	574
3856002	REC3856002	548-549-551
3856003	REC50-806965A4	393
3856008	REC3856008	540-541-543-545-584
3856069	REC3858458	570
3856070	REC3858457	570
3856138	REC17982	474-475
3856176	REC3857176	543
3856366	RM3856366	589
3856367	RM3856367	589
3856444	MAR061	523
3856502	RM3856502	537-540-541-543-545
3856617	BAOMC-20-3862603	522
3856662	BAOMC-20-3862603	522
3856839	REC3856844	400
3856844	REC3856844	400
3856961	REC3856961	423
3857079	REC3587079	398
3857140	REC3857140	556
3857148	RM3857148	541
3857166	REC15-604	412
3857166	REC15-801	412
3857166	REC15-806	412
3857176	REC3857176	540-541-543-545
3857202	REC21214599	439
3857265	REC3586765	398
3857307	REC3858458	570
3857391	RM3857391	435-463
3857402	MAR061	523
3857431	RM3857431	403
3857449	REC805222A1	418
3857450	HGE8870	520
3857450	MAR870	520
3857470	REC21840806	401
3857470	RM3857470	403
3857471	RM3857471	401
3857487	REC853678T	387
3857489	REC3587079	398
3857521	REC3857521	403
3857522	REC3857522	403
3857523	REC3857523	403-404
3857524	REC3857524	403-405
3857532	REC8M0068784	389
3857533	REC3857533	407
3857588	RM3857588	403
3857648	REC26-8M0150312	507
3857650	REC3857650	374
3857656	MAR499	521
3857662	REC27-807473A1	474-475
3857675	REC3857675	548
3857678	MAR499	521
3857684	BAOMC-20-3862603	522
3857696	REC3843751	387
3857723	MAR501	521
3857747	REC50-863007A1	393
3857794	SHEG9903	440
3857798	BAOMC-20-3862603	522
3857810	BAOMC-20-3862603	522
3857813	REC3857813	397
3857835	REC3857835	468
3857954	REC3857954	439-440-450
3857982	RM21610333	379
3857986	REC3858261	375
3858051	RM3858051	548
3858069	REC3587079	398
3858071	REC854525	398
3858077	REC3858077	399
3858139	REC3860384	583
3858212	REC3858212	400
3858229	RM21214596	440
3858261	REC3858261	375
3858303	REC3863090	576
3858331	MP426422	379
3858340	REC46-8M0113733	433-435
3858399	CM3858399	567
3858399	CM3858399A	567
3858399	REC3858399	561
3858399	REC3858399	557-559
3858399	REC3858399	557
3858399	TEN00728	562
3858457	REC3858457	547-570
3858458	REC3858458	547-570
3858462	REC3858462	468
3858631	RM3858631	578
3858714	REC3858714	375
3858809	REC1504952	407
3858847	SHEG9901	440
3858870	HGE8870	511-520
3858870	MAR870	511-520
3858871	HGE8870	520
3858871	MAR870	520
3858873	RM3858873	513
3858873	RM3858873	515
3858873	RM3858873	516
3858873	RM3858873	517
3858873	RM3858873	522
3858873	RM3858873	578
3858941	REC3858941	376
3858969	REC885176	376
3858975	REC898253T22	418-421
3858977	REC898253013	417-418-421
3858979	REC864297T01	388
3858984	REC3858984	410
3858987	REC8M0087834	387
3858995	TEN02029T	348-563
3859019	REC898253T23	417-421
3859020	REC8M0087834	387
3859050	REC3859050	537-572
3859066	MP426422	379
3859078	REC3859078	409
3859082	REC3859082	388
3860079	REC3860079	464-466
3860087	RM3860087	347-468
3860092	REC3860092	347-468
3860093	RM3860093	468
3860171	REC3860171	397
3860183	REC3860183	545
3860210	RM21608511	374
3860230	RM3860230	540-541-545
3860232	REC3860232	541-545
3860252	RM3860252	548-549-551
3860384	REC3860384	354-583
3860703	REC3860703	440
3860726	RM3858128	529
3860764	REC3885317	393
3860769	REC3860769	397
3860795	REC21214601	440
3860798	REC3860082	397
3860808	REC3860808	556
3860842	REC3860842	543
3860842	RM3860842	544
3860842	RM3860842	537-543
3860871	REC3884974	530
3860879	REC3587079	398
3860881	RM3860881	401
3860883	RM3858128	529
3861010	RM3885250	464
3861027	REC3586765	398
3861034	REC21132390	347-348-466-468
3861068	REC22256171	581
3861267	REC3861267	409
3861295	REC15-808	412
3861323	REC3859082	388
3861341	REC46-8M0113736	434-436
3861355	RM21608511	374
3861375	REC3861375	407
3861376	REC3861376	406
3861417	RM21214595	439
3861459	RM3861459	517-521
3861556	REC22171	530
3861570	REC883166A2	399
3861575	REC3861575	398-399
3861634	CM3861634	537-566
3861634	CM3861634A	537-566
3861634	REC3861634	561
3861634	REC3861634AL	561
3861636	CM3861636	566
3861636	CM3861636A	566
3861636	REC3861636	560
3861636	REC3861636AL	560
3861837	REC3594989	400
3861842	MAR061	523
3861985	REC3861985	409-421
3862014	REC3854549	417
3862105	REC3862105	537
3862168	CEF500538K	582
3862198	MAR061	523
3862210	RM3858128	529
3862228	REC3862228	358
3862228	RM3862228	358
3862308	REC50-8M0090697	394-406
3862362	REC26-8M0150312	507
3862385	REC22273952	539
3862387	REC3862387	539
3862482	REC21214599	439
3862484	REC21214601	440
3862485	RM21214595	439
3862487	RM21214596	440
3862500	REC3862500	390-513-515-517
3862513	RM3858128	529
3862523	REC3862523	463
3862526	REC3862523	436
3862612	REC3860082	397
3862612	REC3862612	398
3862613	REC3884950	398
3862627	MAR627	513-525-517-523
3862665	REC3884950	398
3862852	REC3862852	463
3862867	REC3862867	539-544
3862904	MAR627	523
3862985	REC50-808011A05	394
3863007	REC3863007	400
3863061	MAR061	513-515-516-517-523
3863071	BAOMC-20-3862603	511-522
3863082	REC3863082	539
3863083	REC3863083	539-576
3863084	REC3863084	539
3863085	REC3863085	539-544
3863090	REC3863090	548-553-576
3863129	REC3594989	400
3863130	REC3863130	388-421
3863189	RM3863189	513-515-523
3863191	REC3863191	513-515-516-517
3863193	REC3863193AL	560
3863193	REC3863193AL	548-549-551-557-558-559
3863347	RM21548739	529
3863405	RM21548739	529
3863406	RM21548739	529
3863407	RM21548739	529
3863443	GS38322	513-515-516-517
3863450	REC3863450	511-513-515-516-517-528
3875050	REC840902	492-524
3875376	REC859135	485
3875382	REC859194	493
3875384	REC840115	490
3881586	REC21171277	366
3883257	RM3883257	578-579
3883777	REC3883777	579
3883784	REC22171036	465
3883786	REC21280913	465
3883844	RM3883844	494
3883845	REC3883845	490
3884010	RM3884010	519
3884015	RM3884015	519
3884352	REC3843100	390
3884410	REC21945911	404
3884512	RM21132989	504
3884515	RM21226191	504
3884517	RM3884517	504
3884528	RM3884528	519
3884548	REC3884548	491
3884557	RM3884557	505
3884561	RM3884561	505
3884694	REC21141637	445
3884701	MAR701INOX	526-527
3884701	REC21325767	527
3884858	REC3884858	396
3884950	REC3884950	398
3884972	RECV11010	451
3884974	REC3884974	530
3885196	RM3885196	401
3885250	RM3885250	464
3885317	REC50-863007A1	393
3885323	RM3586883	506
3885324	RM3885324	506
3885441	REC21196919	365
3885870	RM3885870	583
3886431	REC3886431	485
3886591	REC21171277	366
3886847	RM21277185	583
3886848	REC22905150	447
3887328	REC3887328	389
3887373	REC3887373	530

OEM	REF	
3887602	REC3583078	378
3887761	CEF500162G	449
3887761	JOH09-821B	449
3887761	REC3887761	449
3888301	REC21840806	401
3888305	CM3888305	565
3888305	CM3888305A	565
3888305	REC22651246	535
3888305	REC22651246AL	535-557-558-559
3888305	TEN00734	561
3888306	TEN00734	561
3888323	RM3888323	530
3888324	REC15-405	412-416-420
3888325	REC15-601	412-416-429
3888326	REC15-804	412-417-420
3888327	REC15-606	412-417-421
3888328	REC15-815	412-418-421
3888460	REC22377272	361
3888555	REC3888555	578-579
3888813	CM3883728	566
3888813	CM3883728A	566
3888813	REC23164609AL	552-553-554-557-558-559
3888814	REC3588746	558-559
3888814	REC3888814	552-553-554-557-558-559
3888814	TEN00733BIS	562
3888814	TEN00735	562
3888816	CM3841427	566
3888816	CM3841427A	566
3888816	REC23164611AL	557-559-579
3888817	CM3841427	566
3888817	CM3841427A	566
3888817	REC23164611AL	559
3888817	REC3888817	557-579
3888817	TEN00737	562
3888821	REC23022	553-574
3888822	REC23020	552-574
3888916	CEF500536K	355-582
3888916	REC3888916	354-579-582
3888917	REC3888917	544-575
3889148	REC21457172	430
3889484	REC21171277	366
3889517	REC21192974	486
3889782	REC3889782	544
3889784	REC3889784	552-553
3889786	REC3889786	552-553-554
3889788	REC3889788	579
3889955	REC22187385	401-402
3889955	REC22187386	401
3889964	MAR964	513-515-517-523
3889964	REC3889964	513-515-517-523
3889965	MAR964	523
3889965	REC3889964	523
3889982	REC21256410	584
4100276	TEN00732	562
4785974	REC127695-35150	367
4785974	RM4785974	367
6210419	RM6210419	349-424
6600756	RECV11010	451
6601761	REC947620	378
6603088	REC11994	422
6604939	REC11994	422
6613687	REC957184	378
6647311	REC955976	459-492
6842160	REC6842160	498
6842273	REC6842273	498
6854250	REC31-86748A1	537
7011013	RECV11013	581
7416033	REC416033	426
8149182	REC8149182	353-425
8520219	CM852019	566
8599252	REC3581774	395
8631533	REC8631533	388
8631650	RM8631650	519
8631652	REC8631652	519
8642665	REC8642665	491
8653103	REC8653103	391
8658726	REC8658726	388
8676498	REC8676498	396
8683212	RM31261191	360
8692305	REC8692305	347-348-353-359-368
8692438	REC8692438	491
8777066	CEF500135	449
8777066	JOH09-819B	449
8777066	REC21730344	449
9139282	REC9139282	480
9671587	GDY17291	469
11305263	REC21400091	407
11991571	REC925068	461-462
13947622	REC947622	378
13947627	REC947627	378
13949657	REC949657	462

OEM	REF	
13949721	REC949721	431-433
13949722	REC949722	433
13955988	REC976018	378
13969011	REC969011	378
14012262	REC955976	459-492
14012279	REC949721	431-433
14012288	REC949659	462
14012291	REC925066	461
14023405	REC925068	461-462
14213244	REC925066	461
15442883	REC1676432	437
20450736	REC20450736	425
20450903	REC947622	378
20459900	REC947620	378
20459972	REC969011	378
20513285	REC20513285	519
20513343	REC21426987	392
20532237	REC21192875	369
20549894	REC947622	378
20707685	REC20707685	494
20739057	REC20739057	519
20821230	REC3831236	367
20856959	RM20856959	506
20867177	RM20867177	506
20867178	RM20867178	504
20867661	RM20867661	506
20867751	RM20867751	504
21106041	REC21379102	445
21108673	REC969011	378
21112496	REC21112496	535-572
21112497	REC21112497	535-572
21114522	REC38201	513-517
21124846	REC879194401	434-435-436
21124849	REC21124849	388-472
21129980	REC50-808011A05	394
21131568	RM21212801	439
21132189	REC21132189	373
21132437	RM21610333	379
21132674	RM21132674	354-530
21132989	RM21132989	504
21132990	RM21132990	505
21134777	REC21134777	373
21139810	REC21139810	360
21139810	RM21139810	353-360
21140344	REC3809721	361
21141341	REC21379288	365
21141637	REC21141637	445
21146097	REC22663814	529
21160912	REC21160912	469
21163289	REC3801387	385
21165389	REC21165389	486
21165390	REC21165390	486
21171277	REC21171277	366
21172053	REC21280913	465
21190094	MAR906	524
21190094	RM861906	524
21190094	SED3090900	526
21190113	REC861477	360
21190113	RM861477	360
21192875	REC21192875	369
21192973	REC21192973	486
21192974	REC21192974	486
21196919	REC21196919	365
21212798	RM21212798	439
21212799	REC21212799	440
21212800	REC21212800	441
21212801	RM21212801	439
21213660	CEF500107T	442-449
21213660	CEF500207	448
21213660	JOH09-1027B	442-448
21213660	REC21213660	439-440-442-448-448
21213664	CEF500178G	353-441-442-448-449
21213664	REC21213664	439-440-441-442-448-449
21214595	RM21214595	439
21214596	RM21214596	440
21214599	REC21214599	439
21214601	REC21214601	440
21219693	REC3583840	430
21219723	REC21219723	447-456
21226191	RM21226191	504
21228429	RM21228429	486
21250645	REC21250645	389
21252967	RM21252967	505
21255090	RM21255090	440
21256410	REC21256410	544-584
21258482	RM3851482	589
21258483	RM3851483	589
21258484	RM3851484	589
21258485	RM3856365	589
21258486	RM3856366	589
21258487	RM3856367	589
21274700	REC21351717	377

OEM	REF	
21277185	RM21277185	354-583
21280913	REC21280913	465
21301848	RM21301848	503
21302969	REC21302969	394
21307714	RM21186282	519
21310068	REC21310068	519
21314684	RM21314684	353-469
21319767	RM21319767	504
21323043	REC21323043	394
21325765	RM21325765	525
21325767	REC21325767	525
21344508	REC22774756	465
21351717	REC21351717	377
21354008	REC3801387	385
21363429	REC21363429	591
21363430	REC21363430	591
21368879	REC21368879	369
21371111	REC21371111	489
21371112	REC21371112	488
21379102	REC21379102	445
21379288	REC21379288	365
21380886	REC21380886	447
21380890	REC21380890	446
21389074	REC877362	354-535-572
21397772	REC21608512	374
21400091	REC21400091	407
21403633	REC21403633	348-558-559
21405493	REC21405493	469
21407026	RM21407026	469
21412639	REC21412639	425
21412646	RM21412646	425
21419374	REC21419374	446-456
21419376	REC21419376	446-456
21423488	REC21423488	395
21424345	MAR345	525-526-527
21426987	REC21426987	392
21436799	REC21436799	409
21450768	REC21450768	526-527
21457172	REC21457172	430
21484383	REC21484383	400-579
21492771	REC21492771	360
21492771	RM21492771	360
21501189	REC859171	507-509-519
21505553	REC22663814	529
21533394	REC21533394	382
21545138	RM21608511	374
21545139	REC21608512	374
21548739	RM21548739	529
21549542	REC3827069	366-368
21549542	RM3827069	366-368
21549544	REC3581621	366
21549544	RM3581621	366
21585053	REC21585053	465
21608511	RM21608511	374
21610333	RM21610333	379
21610334	MP426422	379
21610728	REC21655254	430
21622232	REC21622232	419-421
21624740	REC3840335	360
21624740	RM3840335	360
21632901	REC21632901	368
21632901	RM21632901	368
21633476	PRE3300C05	531
21633477	PRE3300C06	531
21633478	PRE3300C07	531
21633479	PRE3300C08	531
21633480	PRE3300C09	531
21633481	PRE3300C10	531
21633482	PRE3300C11	531
21633483	PRE3300C12	531
21633484	PRE3300C13	531
21633485	PRE3300C14	531
21633486	PRE3300C15	531
21633487	PRE3300C16	531
21633488	PRE3300C17	531
21633489	PRE3300C18	531
21633490	PRE3300C19	531
21633491	PRE3300C20	531
21633492	PRE3300C21	531
21633493	PRE3300C22	531
21633494	PRE3300C23	531
21633495	PRE3300C24	531
21633496	PRE3300C25	531
21633497	PRE3300C26	531
21633498	PRE3300C27	531
21633499	PRE3300C28	531
21633500	PRE3300C29	531
21633501	PRE3300C30	531
21633502	PRE3300C31	531
21633503	PRE3300C32	531
21633504	PRE3300C33	531
21633505	PRE3300C34	531
21633506	PRE3300C35	531

OEM	REF	
21633507	PRE3300C36	531
21633509	PRE3300C38	531
21633511	PRE3300C40	531
21633513	PRE3300C42	531
21633515	PRE3300C44	531
21633517	PRE3300C46	531
21633519	PRE3300C48	531
21633521	PRE3300C50	531
21640514	REC3831236	367
21641712	REC21880386	430
21646645	REC21646645	365
21652399	REC3858212	400
21655254	REC21655254	430
21662702	REC21662702	450
21684825	SED3091600	526-527
21687472	REC21913334	367
21687793	REC21687793	592
21687796	REC21687796	592
21700014	MAR847INOX	526
21702999	REC21702999	366
21707132	REC21707132	368
21707132	RM477556	368
21707133	REC478736	368
21707133	RM478736	368
21707134	REC21707134	367
21707134	RM466634	367
21711728	REC21711728	503
21718129	CM21718129	567
21718912	REC3583443	361
21718912	RM3583443	361
21721548	REC21721548	405
21721550	REC21721550	405
21730348	CEF500177GT	448
21730348	JAB17018-0001	448
21730348	REC3593573	448
21745117	RM21745117	529
21745119	REC22452005	529
21752712	REC30-879194A01	578
21782391	REC21646645	365
21786692	REC22171036	465
21840806	REC21840806	401
21849843	REC21849843	495
21868040	REC21868042	560
21868042	CM21718129	567
21868042	REC21868042AL	560
21880386	REC21880386	430
21910902	RM3858128	529
21913334	REC21913334	367
21921545	REC21921545	501
21924263	REC21924263	589
21924264	REC21924264	589
21924265	REC21924265	589
21924266	REC21924266	589
21924267	REC21924267	589
21924268	REC21924268	589
21924269	REC21924269	589
21924270	REC21924270	589
21945911	REC21945911	404
21951302	REC21951302	451
21951342	CEF500121GX	448-449
21951342	JOH09-808B	349-352-448-449
21951342	REC3586496	441-443-448-449-455
21951356	CEF500106GT	449
21951356	JOH09-1028B	449
21951356	REC3841697	449
21951358	CEF500162G	449
21951358	JOH09-821B	449
21951358	REC3887761	449
21951362	CEF500135	449
21951362	JOH09-819B	449
21951362	REC21730344	449
21951364	CEF500145T	449
21951364	JOH09-814B	449
21951364	REC875697	449
21951368	REC21951368	443-454
21951410	REC875769	455
21951414	REC21951414	443-454
21951420	REC875698	454
21951422	REC21951422	443-454
22024631	REC806612T	388
22027280	REC40990	395
22030848	REC3582732	368
22030848	RM3582732	368
22030852	REC21632901	368
22030852	RM21632901	368
22057107	REC834337	366
22057107	RM834337	366
22063494	REC22063494	447-456
22171036	REC22171036	465
22185019	REC22185019	502-509
22185027	REC22185027	502
22197130	REC3841481	354
22197130	RM22197130	354

OEM	REF	
22197130	RM22197130	579
22197130	RM22197130	582
22206133	REC22206133	494
22222936	CEF500116GX	448
22222936	JOH09-1026B	448
22222936	REC3593659	448
22256171	REC22256171	534-581
22256625	RM21745117	529
22273952	REC22273952	539-584
22283751	REC22283751	469
22297931	REC1359649	531
22303438	CEF501001	535-576
22303438	CEF501011	583
22303438	REC22303438	354-535-576
22303438	REC875822	583
22314183	REC22314183	400-577
22336734	REC22336734	539-541-543-544-545-555-556
22352491	REC22352491	469
22377272	REC22377272	361
22389354	REC22389354	502
22393048	REC22393048	507-519
22430456	REC22430456	554
22452003	RM21745117	529
22452005	REC22452005	529
22479638	REC22479638	591
22479642	REC22479642	591
22479648	REC22479648	534-592
22479650	REC22479650	592
22557470	REC23557470	494
22574246	REC22574246	592
22582994	REC22582994	503
22608512	REC21608512	374
22612828	REC22612828	554-574
22637542	REC22637542	407
22651246	CM22651246	565
22651246	REC22651246	560
22651246	REC22651246	557-559
22651246	REC22651246AL	560
22663814	REC22663814	529
22671213	SED3091600	526
22671214	MAR847INOX	526
22677639	REC500MA	364
22774756	REC22774756	465
22797782	REC1359649	531
22898644	REC22898644	590
22898645	REC22898645	590
22898646	REC22898646	590
22898647	REC22898647	590
22905150	REC22905150	447
22905155	REC22905155	447
22915955	REC22915955	501
22948844	SED3091600	526
22948847	MAR847INOX	526-527
22954700	REC22954700	469
22984479	RM23954708	361
23059414	REC23059414	436-437
23164609	REC3588746AL	558-559
23164611	REC23164611AL	559
23172849	REC23172849	534
23172849	REC23172849AL	534-557-559
23172856	CM40005875A	557
23386773	REC21608512	374
23538670	RM23538670	368
23553896	REC23553896	573
23615636	CM22651246	565
23794966	REC21608512	374
23954708	RM23954708	361
30637961	REC31251252	465
30650525	REC30650525	486
30659131	REC31419556	397
30667118	REC31419556	397
30677767	REC30677767	434
30713459	REC30713459	490
30729340	REC30729340	492
30731261	REC30731261	486
30731262	REC30731262	486
30731263	REC30731263	486
30731264	REC30731264	486
30731740	RM30731740	503
30731772	REC31359568	464
30731809	REC30731809	353-467-469
30750678	RM30750678	503
30751022	REC3801404	437
30757056	REC31251252	465
30777600	REC31430317	491
30782228	REC3848965	395
30788490	REC30788490	368
31216308	REC31216308	387
31251252	REC31251252	465
31251996	RM9180722	506
31258305	REC31359568	464
31261191	RM31261191	360

OEM	REF	
31293668	REC3801404	437
31339213	REC31339213	498
31359568	REC31359568	464
31378645	REC1378645	480
31419556	REC31419556	397
31430317	REC31430317	491
35888745	REC3588745	558-559
35993659	CEF500116GX	441
35993659	JOH09-1026B	441
35993659	REC3593659	441
38622500	REC3862500	511
38879363	REC3801173	385
40005192	REC40005192	569
40005206	CM40005206	567
40005206	CM40005206A	567
40005334	REC40005334	419-421
40005775	REC40005775	498
40005875	CM40005875	567
40005875	CM40005875A	567
40005875	REC23172849	534
40005875	REC23172849AL	534
40005875	TEN00739AL	562
41100098	CM41100098	567
41100098	REC41100098	560
41100098	REC41100098AL	560
41100276	CM41100276	567
41100276	CM41100276P	567
41103102	REC21687796	592
41103103	REC21687793	592
60112158	REC968955	510
83857561	REC3860171	397
85104134	REC85104134	377
85108974	RM85108974	392-592
85113732	REC21351717	377
85115324	REC85104134	377
85116162	REC21351717	377
85122800	REC85122800	591
85124676	REC85104134	377
898253013	REC898253013	417-418
10-812509184	MP0180-001	393-394
10-861788	REC10-861788	393-394
13554-0001	CEF500124	441
13554-0001	JOH09-812B	347-348-441-445
13554-0001	REC13554-0001	441
22-89771Q2	GS31066	357-370
24-803192A2	REC27-803192A2	434
27-41609	REC27-41609	380
27-60715	REC27-60715	380
27-65577	REC27-65577	380
27-70142	REC27-70142	380
35-809097	LENS3213	357
35-809097	RACS3213	357
35-809099	RACS3214	357
35-850481	REC500MA	364
35-850481A1	REC500MA	364
35-886638	LENS3227	357
35-886638	RACS3227	357
3863080 +3863081	REC3863080	539-576
805222A1	REC805222A1	420
807964A1	REC807964A1	418-420
853807 +853808	REC853808	551-552
876266 +876267	REC875741	572
876266 +876268	REC19037	572

SISTEMA ALIMENTACIÓN Y FILTRACIÓN 619

ACCESORIOS PARA FILTROS 623
BOMBA DE COMBUSTIBLE 624
- BOMBA DE COMBUSTIBLE ELÉCTRICA 624
- BOMBA DE COMBUSTIBLE MECÁNICA 624

CARBURADOR 624
- BOYAS 628
- CARBURADOR- KITS 626
- GUÍA KITS DE CARBURADORES 629
- JUNTA BASE 625

FILTRO DE ACEITE 621
FILTRO DE COMBUSTIBLE Y ELEMENTOS 619
- BRACKET 619
- FILTRO COMBUSTIBLE - SEPARADOR AGUA 619
- FILTRO DECANTADOR 619
- FILTRO GASOLINA 621
- RACOR DE LATÓN 620

MANGUERA CARBURANTE 622
RACORES 622

SISTEMA ELÉCTRICO 630

ALTERNADORES 633
MOTORES DE ARRANQUE 631
REGULADORES 632
SENSORES 630
- SENSOR MAP 630
- SENSOR PRESIÓN DE ACEITE 630
- SENSOR TEMPERATURA DEL AGUA 630
- SENSOR TEMPERATURA DEL AIRE 630
- SENSOR TPS 630

SOLENOIDE RELÉ 633
- SOLENOIDE 633
- RELÉ BOMBA GASOLINA ELÉCTRICA 633

TRIM 634
- TRIM - LATIGUILLOS 635
- TRIM - MOTOR 634
- TRIM – SENSOR 635

SISTEMA DE REFRIGERACIÓN 636

BOMBA ASPIRACIÓN DE AGUA 637
TERMOSTATO 636
- GUÍA 636
- TERMOSTATO 636
- TERMOSTATO – CUERPO 637

PARTES DEL MOTOR 644

JUNTAS PARA BASES GM Y FORD 644

SISTEMA ENCENDIDO 638

BOBINAS 638
- GUÍA 638

BUJÍAS 639
- BUJÍAS 639
- CABLES ALTO RENDIMIENTO 639

DISTRIBUIDOR 640
- CONDENSADORES 641
- KITS ENCENDIDO 642
- KITS ENCENDIDO ELECTRÓNICO 643
- PLATINOS 642
- ROTORES 642
- TAPA 640
- TAPA - ENCENDIDO ELECTRÓNICO 641

MÓDULO IGNICIÓN 640
MÓDULO SISTEMA CAMBIO 643

SISTEMA ESCAPE Y ADMISIÓN 661

BOMBA DE CIRCULACIÓN 671
- BOMBAS 671
- MANGUITO 671

COLECTORES Y CODOS ESCAPE 669
- JUNTAS 669
- JUNTAS COLECTOR ADMISIÓN 670
- JUNTAS CODOS 670
- JUNTAS TAPA 670
- TAPÓN GOMA 670
- TAPA 670

DESPIECES COLECTORES Y CODOS 661
- 120 HP, 4 CYL 153 CID 2.5 GM SERIES 400 661
- 120HP, 4 CYL 153 CID 2.5L GM (1981-86) 662
- 140HP, 4 CYL 181 CID 3.0L GM (1973-90) 663
- 4.3 H.O. GM 262 CID V6 (1986-90) 4.3 GM 262 CID V6 (1991+) 664
- 800 GM 305 / 350 CID V8 665
- 5.7L GM 350 CID V8 (1990+) 666
- 5.0 / 5.8L & EFI FORD 302/351 CID V8 (1991+) 667
- 7.4 / 8.2L GM 454/502 CID V8 (1991+) 668

UNIDADES DE TRANSMISIÓN 672

ÁNODOS 672
COMPONENTES DE COLA 693
- ACOPLAMIENTOS 693
- CABLE CAMBIO 694
- CABLE CAMBIO ELÉCTRICO 694
- CRUCETAS DEL CARDAN 695
- EJE HÉLICE, CAMBIO MECÁNICO 695
- EJES TRANSMISIÓN 694
- FUELLES CABLE DE CAMBIO 693
- FUELLES ESCAPE 693
- FUELLES TRANSOM 693
- KIT ENGRANAJES TRANSOM 694
- KIT PIÑONES Y DESPLAZABLES 694

CORREAS 691
DESPIECE COLAS 674
- COBRA (1986-93) 674
- COBRA (1994-98) 680
- 400-800 (1973-85) 682

DESPIECE TRANSOM 686
- ANTIGUO 687
- COBRA (1986-93) 686

HERRAMIENTAS DE COLA 695
- ALINACIÓN DE MOTOR 695

KITS REPARACIÓN 688
- 400-800 688
- COLAS 688
- EJE BOMBA 689
- GOMAS 688
- JUNTAS 689
- KIT TRANSOM 688
- KIT BOMBA 689

RETENES 690
- GUÍA AROS TÓRICOS 690
- GUÍA RETENES ACEITE 690
- GUÍA RETENES COBRA 691

UNIDADES DE TRANSMISIÓN 673
- KIT CONVERSIÓN OMC-COBRA 673
- PARTE INFERIOR COMPLETA 673

SISTEMA DE PROPULSIÓN 696

HÉLICES AL E INOX DE 3 Y 4 PALAS 696
- GUÍA HÉLICES CON NÚCLEO INTEGRADO 697
- HÉLICES PARA NÚCLEO INTERCAMBIABLE 697
- NÚCLEO INTERCAMBIABLE 697

PIEZAS DE HÉLICE 698
- ESPACIADOR 698
- KIT CIERRE HÉLICE 699
- PASADOR 698
- TOPE HÉLICE 698
- TUERCA HÉLICE 699

REF --> RO 700
RO --> REF 704

FUEL & FILTRATION SYSTEM 619

CARBURETOR 624
- BASE GASKETS 625
- CARBURETORS: GUIDE 628
- CARBURETORS: KIT 626
- FLAME ARRESTORS 628
- FLOAT 628
- GUIDE: GASKET KITS 629

FILTER ACCESSORIES 623
FUEL FILTERS AND ELEMENTS 619
- BRACKET 619
- BRASS RACCORS 620
- COMPLETE FUEL FILTER 619
- FUEL FILTER 621
- WATER SEPARATING FUEL FILTER 619

FUEL HOSES 622
FUEL PUMP 624
- ELECTRICAL 624
- MECHANICAL 624

OIL FILTER 621
RACOR 622

ELECTRIC SYSTEM 630

ALTERNATORS 633
REGULATOR 632
SENSORS 630
- AIR TEMPERATURE 630
- MAP 630
- OIL PRESSURE 630
- TPS 630
- WATER TEMPERATURE 630

SOLENOID & RELAY 633
- RELAY FUEL ELECTRIC PUMP 633
- SOLENOID 633

STARTERS 631
TRIM 634
- HOSES 635
- SENSOR 635
- TRIM ENGINE 634

IGNITION SYSTEM 638

DISTRIBUTOR 640
- CAP 640
- CONDENSERS 641
- DISTRIBUTOR 640
- ELECTRONIC CONVERSION KITS 643
- POINTS 642
- ROTORS 642
- TUNE UP KITS 642

IGNITION COIL 638
- GUIDE 638

IGNITION MODULES 640
SPARK PLUG 639
- HD SPARK PLUG WIRES SET 639

SHIFT ASSIT MODULE 643

COOLING SYSTEM 636

THERMOSTAT 636
- THERMOSTAT GUIDE 636
- THERMOSTAT KITS 636

WATER PUMPS 637
- RAW WATER PUMP 637

ENGINE PARTS 644

MARINE GASKETS TO GM & FORD ENGINES 644

EXHAUST & INTAKE SYSTEM 661

BLOCK CIRCULATING PUMP 671
- HOSE 671
- PUMPS 671

MANIFOLDS & ELBOWS 669
- COVER 670
- COVER GASKET 670
- ELBOW GASKET 670
- EXHAUST ELBOWS 669
- EXHAUST MANIFOLD 669
- EXHAUST MANIFOLD GASKET 669
- GASKETS 669
- INTAKE MANIFOLD GASKET 670
- RUBBER CAP 670

OMC

MANIFOLDS & ELBOWS PARTS 661
120 HP, 4 CYL 153 CID 2.5 GM SERIES 400 661
120HP, 4 CYL 153 CID 2.5L GM (1981-86) 662
140HP, 4 CYL 181 CID 3.0L GM (1973-90) 663
4.3 H.O. GM 262 CID V6 (1986-90) 4.3 GM 262 CID V6 (1991+) 664
800 GM 305 / 350 CID V8 665
5.7L GM 350 CID V8 (1990+) 666
5.0 / 5.8L & EFI FORD 302/351 CID V8 (1991+) 667
7.4 / 8.2L GM 454/502 CID V8 (1991+) 668

TRANSMISSION UNIT 672

ANODE 672
GASKETS 689
DIPSTICK 689
OUTDRIVE SEAL COBRA 689
WATER OUTLET 689
SWIVEL BRG. MECH SHIFT 689
SWIVEL BRG. ELECT. SHIFT 689
GEAR CASE PARTS 674
COBRA (1986-93) 674
COBRA (1994-98) 680
400-800 (1973-85) 682
GEAR HOUSING COMPONENTS 693
BALL GEAR KIT TRANSON 694
COUPLERS 693
DRIVES SHAFTS 694
ELECTRIC SHIFT CABLE 694
EXHAUST BELLOWS 693
GEAR SETS & CUTCH 694
PROP SHAFT MECHANICAL SHIFT 695
SHIFT CABLE 694
SHIFT CABLE BELLOWS 693
TRANSON BELLOWS 693
U-JOINTS 695
REPAIR KITS 688
400-800 688
DRIVES 688
PLATE SEAL 688
TRANSOM 688
WATER PUMP SHAFT 689
WATER PUMP AGUA 689
SEALS 690
COBRA SELAS APPLICATIONS 691
O-RING GUIDE 690
OIL SEAL GUIDE 690
TOOLS 695
ENGINE ALIGMENT TOOL 695
TRANSOM PARTS 686
COBRA (1986-93) 686
INTERMEDIATE HOUSING-STRINGER MOUNT 687
UNIT DRIVES 673
CONVERSION KIT OMC-COBRA 673
COMPLETE GEAR HOUSING ASSEMBLY 673
V-BELTS GUIDE 691

PROPULSION SYSTEM 696

3 & 4 BLADE AL & SS PROPELLERS 696
PROPELLERS APPLICATION WITH RUBBER HUB 697
PROPELLERS **SOLAS** APPLICATION GUIDE 698
PROP HARDWARE 698
COTTER PIN 698
KITS 699
NUT 699
SPACER 698
THRUST WASHER 698
REF --> OEM 700
OEM --> REF 704

IT

SITEMA DI ALIMENTAZIONE E FILTRAZIONE 619

ACCESSORI PER FILTRI 623
CARBURATORE 624
GALLEGGIANTE 628
GUARNIZIONE BASE 625
GUIDA 628
GUIDA KIT 629
KIT 626
FILTRO ARIA
FILTRI BENZINA E RACCORDI 619
FILTRO BENZINA 621
FILTRO DI DECANTAZIONE BENZINA 619
FILTRO SEPARATORE ACQUA-BENZINA 619
RACCORDO IN OTTONE 620
SUPPORTO 619
FILTRO OLIO 621
POMPA BENZINA 624
POMPA BENZINA ELETTRICA 624
POMPA BENZINA MECCANICA 624
RACCORDI 622
TUBO DI CARBURANTE 622

SISTEMA ELETTRICCO 630

ALTERNATORE 633
MOTORINI AVVIAMENTO 631
REGOLATORI 632
SENSORE 630
SENSORE MAP 630
SENSORE TPS 630
SENSORE PRESSIONE DELL'OLIO 630
SENSORE TEMPERATURA ACQUA 630
SENSORE TEMPERATURA ARIA 630
SOLENOIDI E RELE 633
SOLENOIDI 633
RELE POMPA BENZINA EETTRICA 633
TRIM 634
MOTORI 634
TUBI TRIM COBRA 635
SENSORE COBRA 635

SISTEMA DI ACCENSIONE 638

BOBINE 638
GUIDA 638
CANDELE 639
KIT CAVI CANDELE, ALTE PRESTAZIONI 639
MODULI AVVIAMENTO 640
MODULO SISTEMA CAMBIO 643
SPINTEROGENO 640
CALOTTE 640
CONDENSATORI 641
ROTORI 642
PUNTINE 642
KIT 642
KIT DI CONVERSIONE ELETTRICO 643

SISTEMA DI RAFFREDDAMENTO 636

ANODI
CANADA METAL
RECMAR
TECNOSEAL
GUIDA GIRANTE
KIT TENUTE
GUIDA KIT TENUTE
GUIDA TENUTE
LIQUIDO INIBITORE DELLA CORROSIONE
POMPA ACQUA 637
BASE
BASE - KIT
BOCCOLA
CORPO
CORPO - KIT
GUARNIZIONE POMPA
GUIDA POMPA ACQUA
GUIDA POMPA E TENUTE
KIT RICAMBI
PIASTRA POMPA
TERMOSTATO 636
KITS 636
GUIDA 636
CORPO 637

PARTI MOTORE 644

GUARNIZIONI PER MOTORI GM E FORD 644

SISTEMA DI SCARICO E ASPIRAZIONE 661

COLLETORE SCARICO 669
GOMITI 669
GUARNIZIONE COLLETTORE DI SCARICO 669
GUARNIZIONE COLLETTORE ASPIRAZIONE 670
GUARNIZIONE COPERCHIO 670
TAPPO IN GOMMA 670
COPERCHIO 670
PARTI COLLETTORI E GOMITI 661
120 HP, 4 CYL 153 CID 2.5 GM SERIES 400 661
120HP, 4 CYL 153 CID 2.5L GM (1981-86) 662
140HP, 4 CYL 181 CID 3.0L GM (1973-90) 663
4.3 H.O. GM 262 CID V6 (1986-90) 4.3 GM 262 CID V6 (1991+) 664
800 GM 305 / 350 CID V8 665
5.7L GM 350 CID V8 (1990+) 666
5.0 / 5.8L & EFI FORD 302/351 CID V8 (1991+) 667
7.4 / 8.2L GM 454/502 CID V8 (1991+) 668

POMPA DI RICIRCOLO DI BLOCCO 671
POMPE 671
MANICOTTO 671

UNITÀ DI TRASMISSIONE 672

ANODI 672
ATTREZZATURA 695
ALLINEAMENTO MOTORE 695
COMPONENTI PIEDE 693
ASSE ELICA CAMBIO MECCANICCO 695
ASSE TRASMISSIONE 694
CAVO CAMBIO 694
CAVO CAMBIO ELETTRICO 694
CROCIERA 695
CUFFIE CAMBIO 693
CUFFIE SCARICO 693
CUFFIE TRANSON 693
KIT ENGRANAGGIO TRANSON 694
KIT PIGNONI 694
PARASTRAPPI 693
GUIDA CINGHIE 691
GUARNIZIONE 689
ASTICELLA DELL'OLIO 689
CAMBIO ELETTRONICO 689
CAMBIO MECCANICO 689
CHIUSURA COBRA 689
PASSAGGIO DELL ACQUA 689
KIT RIPARAZIONE 688
400-800 688
ASSE POMPA ACQUA 689
GOMMA TRANSOM 688
KIT POMPA ACQUA 689
PIEDI 688
TRANSOM 688
PARAOLIO 690
APPLICAZIONI PARAOLIO COBRA 691
GUIDA PARAOLIO 690
GUIDA TENUTE 690
PARTI PIEDI 674
COBRA (1986-93) 674
COBRA (1994-98) 680
400-800 (1973-85) 682
PARTI TRANSOM 686
COBRA (1986-93) 686
VECCHIO 687
UNITÀ DI TRASMISSIONE 673
KIT CONVERSIONE OMC-COBRA 673
PARTE INFERIORE COMPLETA 673

PROPULSION SYSTEM 696

CHIUSURA ELICA 698
DISTANZIALE 698
DADO 699
CHIAVISTELLI 698
FERMO 698
KIT 699
ELICHE ALLUMINIO E INOX DA 3 E 4 PALE 696
GUIDA ELICHE CON MOZZO 697
GUIDA MOZZI 697
REF --> OEM 700
OEM --> REF 704

FR

SYSTÈME D'ALIMENTATION ET DE FILTRATION 619

ACCESSOIRES POUR FILTRES 623
CARBURATEUR 624
CARBURATEUR – GUIDE DE KITS 629
CARBURATEUR – KIT 626
FLOTTEUR 628
GUIDE DES CARBURATEURS 628
JOINTS DE BASE 625
FILTRE À ESSENCE ET CARTOUCHE DE RECHANGE 619
FILTER À ESSENCE 621
FILTRE À ESSENCE 619
FILTRE DÉCANTATEUR D'ESSENCE 619
RACCORD EN LAITON 620
TÊTE DE FILTRE 619
FILTRE À HUILE 621
POMPE À ESSENCE 624
POMPE À ESSENCE ÉLÉCTRIQUE 624
POMPE À ESSENCE MÉCANIQUE 624
RACCORDS 622
TUYAU DU CARBURANT 622

SYSTÈME ÉLECTRIQUE 630

ALTERNATEUR 633
CAPTEURS 630
MAP 630
TEMPERATURE DE L'AIRE 630
PRESSION D'HUILE 630
TEMPERATURE D'EAU 630
TPS 630
DÉMARREUR 631
REGULATEURS 632
SOLENOIDE RELAIS 633
SOLENOIDE 633
RELAIS POUR POMPE ÉLÉCTRIQUE 633
TRIM 634
CAPTEUR TRIM COBRA 635
MOTEUR DE TRIM 634
TUYAU 635

SYSTÈME D'ALLUMAGE 638

ALLUMEUR 640
CONDENSATEUR 641
DOIGT D'ALLUMEUR 642
KITS 642
KITS DE CONVERSION ÉLÉCTRONIQUE 643
TÊTE D'ALLUMEUR 640
VIS PLATINÉES 642
BOBINE D'ALLUMAGE 638
GUIDE 638
BOUGGIES 639
KIT FAISCEAU DE BOUGIE 639
MODULES D'ALLUMAGE 640
MODULES SYSTÈME DE CHANGEMENT 643

SYSTÈME DE REFROIDISSEMENT 636

POMPE À EAU 637
THERMOSTAT 636
CORS DE THERMOSTAT 637
GUIDE 636
THERMOSTAT 636

PIÈCES MOTEUR 644

JOINTS POUR MOTEURS GM ET FORD 644

SYSTÈME D'ECHAPPEMENT ET D'AMISSION 661

COLLECTEUR D'ECHAPPEMENT 669
BOUCHON EN CAOUTCHOUC 670
COUDE D'ÉCHAPPEMENT 669
COUVERCLE 670
JOINTS COLECTEUR D'ÉCHAPPEMENT 669
JOINTS COLLECTEUR ADMISSON 670
JOINTS COUDES 670
JOINTS COUVERCLE 670
PIÈCES COLLECTEURS ET COUDES 661
120 HP, 4 CYL 153 CID 2.5 GM SERIES 400 661
120HP, 4 CYL 153 CID 2.5L GM (1981-86) 662
140HP, 4 CYL 181 CID 3.0L GM (1973-90) 663
4.3 H.O. GM 262 CID V6 (1986-90) 4.3 GM 262 CID V6 (1991+) 664
800 GM 305 / 350 CID V8 665
5.7L GM 350 CID V8 (1990+) 666
5.0 / 5.8L & EFI FORD 302/351 CID V8 (1991+) 667
7.4 / 8.2L GM 454/502 CID V8 (1991+) 668
POMPE DE BRASSAGE 671
DURITE 671
POMPES 671

EMBASES ET PIÈCES 672

ANODES 672
COMPONENTS D'EMBASES 693
ACCOUPLEMENTS 693
ARBRE HÉLICE CHANGEMENT MÉCANIQUE 695
ARBRE TRANSMISSION 694
CÂBLE CHANGEMENT 694
CARDAN 695
KIT PIGNONES 694
KIT PIGNONES TRANSON 694
SOUFFLET CABLE CHANGEMENT 693
SOUFFLET D'ÉCHAPPEMENT 693
SOUFFLET TRANSON 693
EMBASES 673
KIT CONVERSION OMC-COBRA 673
PARTIE INFÉRIEURE COMPLETE 673
GUIDE COURROIES 691
JOINTS 689
CHANGEMENT ÉLÉCTRONIQUE 689
CHANGEMENT MÉCANIQUE 689
FERMENTURE COBRA 689
SORTIE D'EAU 689
TIGE D'HUILE 689
JOINTS SPI 690
GUIDE JOINTS 690
GUIDE JOINTS SPI 690
GUIDE JOINTS SPI COBRA 691
KITS DE RÉPARATION 688
400-800 688
ARBRE POMPE D'EAU 689
EMBASES 688
JOINT DE TRANSOM 688
KIT POMPE D'EAU 689
TRANSON 688
PIÈCES D'EMBASES 674
COBRA (1986-93) 674
COBRA (1994-98) 680
400-800 (1973-85) 682
PIÈCES TRANSOM 686
ANCIEN 687
COBRA (1986-93) 686
OUTILS 695
OUTIL D'ALIGNEMENT 695

SYSTÈME DE PROPULSION 696

HÉLICE ALUMINIUM ET INOX 3 ET 4 PALES 696
GUIDE DES HÉLICES ET MOYEUX 697
MOYEU INTERCHANGEABLE 697
PIÈCES POUR HÉLICE 698
ÉCROU D'HÉLICE 699
ENTRETOISE 698
GOUPILLE FENDUE 698
KIT ÉCROU D'HÉLICE 699
RONDELLE FREIN 698
REF --> RO 700
RO --> REF 704

SISTEMA DE ALIMENTACIÓN Y FILTRACIÓN
FUEL & FILTRATION SYSTEM
SISTEMA DI ALIMENTAZIONE E FILTRAZIONE
SYSTÈME D'ALIMENTATION ET DE FILTRATION

FILTRO DE COMBUSTIBLE Y ELEMENTOS — FUEL FILTERS AND ELEMENTS — FILTRI BENZINA E RACCORDI — FILTRE A ESSENCE ET CARTOUCHE DE RECHANGE

BRACKET — BRACKET — SUPPORTO — TÊTE DE FILTRE À ESSENCE

Con 2 tapones de bronce y 2 tubos de extensión. (2 entradas y 2 salidas).

With 2 brass plugs and 2 extension tubes. (2 inputs & 2 outputs).

Con 2 tappi di bronzo e 2 tubi di estensione. (2 ingressi entrata carburante e 2 uscite carburante).

Avec 2 bouchons en bronze et 2 tubes d'extension. (2 entrées et 2 sorties).

REF		
REC25000	1/4"	AL
REC25010	1/4"	INOX /SS AISI316
REC25020	3/8"	AL
REC25030	3/8"	INOX /SS AISI316
RECOBBRACKET	1/4"	Plast.



REC25000 - REC25020 — REC25010 - REC25030 — RECOBBRACKET

FILTRO COMBUSTIBLE SEPARADOR DE AGUA — WATER SEPARATING FUEL FILTER — FILTRO SEPARATORE ACQUA-BENZINA — FILTRE À ESSENCE

REF	OEM
REC35-8M0061975	174144 502905

RECMAR



REF	OEM
RM3862228	987754 502906



FILTRO CON BRACKET
Con 2 tapones de bronce y 1 tubo de extensión.

OEM FILTER WITH BRACKET
With 2 brass plugs & 1 extension tube.

FILTRO BENZINA CON SUPPORTO
Con 2 tappi di bronzo e 1 tubo di estensione.

FILTRE A ESSENCE AVEC SUPPORT
avec 2 bouchons en bronze et 1 tube d'extension

REF	OEM	MICRON			BRACKET
REC24950	35-60494A4	25	1/4"	50 GPH	AL



RECMAR

FILTRO DECANTADOR GASOLINA — COMPLETE FUEL FILTER — FILTRO DECANTATORE BENZINA — FILTRE DÉCANTEUR POUR ESSENCE

Con Bracket Inox y cubeta metálica.

With Stainless Steel Bracket and metallic bowl.

Con Bracket e vaschetta metallica.

Avec support en acier inoxydable et cuvette métallique.

REF	OEM		OEM
RAC320R-RAC-02	35-802893Q4	RACS3220UL	35-809101





OMC

RECAMBIOS MARINOS

FILTRO DECANTADOR GASOLINA — COMPLETE FUEL FILTER — FILTRO DECANTATORE BENZINA — FILTRE DÉCANTEUR POUR ESSENCE

RACOR



				RAC120R-RAC-01	RAC320R-RAC-01	RAC320R-INOX-01	RAC320R-RAC-02
FLUJO MÁXIMO	MAX. FLOW	FLUSSO MASSIMO	FLUX MASSIMALE	114 l/h 30 gph	340 l/h 60 gph	340 l/h 60 gph	340 l/h 60 gph
ELEMENTO	ELEMENT	ELEMENTO	ÉLÉMENT	RACS3240	RACS3213	RACS3213	RACS3220UL
CAZOLETA TRANSPARENTE (sólo se recomienda para fueraborda.)	CLEAR BOWL (just for outboards)	VASCHETTA TRASPARENTE (solo nei fuoribordo.)	CAZOLETA TRANSPARENTE (uniquement recommandé pour le hors-bord.)	✔ PLAST.	✔ PLAST.	✔ PLAST.	✘ METAL.
ROSCAS CENTRALES	CENTRAL THREADS	FILETTO CENTRALE	FILS CENTRAUX	M18 x 1.5	1 1/4"	1 1/4"	1 1/4"
TAMAÑO ROSCA CABEZA	HEAD PORT SIZE	DIMENSIONE VITE TESTA	TAILLE DU FIL DE TÊTE	1/4-18 NPTF	1/4-18 NPTF	1/4-18 NPTF	1/4-18 NPTF
ALTURA X Ø	HEIGHT X Ø	ALTEZZA X Ø	HAUTEUR X Ø	166 x 81 x 81 mm	238 x 102 x 102 mm	238 x 102 x 102 mm	238 x 102 x 102 mm
PESO	WEIGHT	PESO	POIDS	0,5 kg	0,9 kg	0,9 kg	0,9 kg
CAIDA DE PRESIÓN	PRESSURE DROP	CADUTA DI PRESSIONE	CHUTE DE PRESSION	0.15 PSI 0.01 bar	0.61 PSI 0.04 bar	0.61 PSI 0.04 bar	0.61 PSI 0.04 bar
PRESIÓN MÁXIMA	MAX. PRESSURE	PRESSIONE MASSIMA	PRESSION MAXIMALE	7 PSI 0.05 bar	7 PSI 0.05 bar	7 PSI 0.05 bar	7 PSI 0.05 bar
DESMONTAJE CARTUCHO-CAZOLETA	ELEMENT REMOVAL UNDERBOWL	RIMOZIONE DELLA CARTUCCIA	DÉMONTAGE DE LA CARTOUCHE	25,4 mm 1"	25,4 mm 1"	25,4 mm 1"	25,4 mm 1"
TEMPERATURA DE TRABAJO	OPERATING TEMPERATURE	TEMPERATURA DI LAVORO	TEMPERATURE DE TRAVAIL	-40°C +124°C			

ELEMENTOS DE RECAMBIO — ELEMENT — ELEMENTI DI RICAMBIO — CARTOUCHE DE RECHANGE

REF	OEM	
RACS3240 LENS3240		RAC120R-RAC-01
RACS3227 LENS3227	35-886638	
RACS3213 LENS3213	35-809097	RAC320R-RAC-01 RAC320R-RAC-01 INOX RAC320R-RAC-03
RACS3214	35-809099	
RACS3228UL		RAC320R-RAC-02, bracket RACOR



LENS3240
LENS3227
LENS3214



RACS3240
RACS3227
RACS3214



RACS3228UL

RÁCORES DE LATÓN — BRASS RACORS — RACCORDI IN OTTONE — RACCORDS À LAITON

REF	OEM			
GS31066	22-89771Q2	1/4" NPT	5/16" = 7.9 mm	2
GS31067		1/4" NPT	3/8" = 9.5 mm	2

GOLDENSHIP



REF			
GS31065	1/4" NPT	3/8" = 9.5 mm	1
GS31066	1/4" NPT	5/16" = 7.9 mm	2
GS31055	3/8" NPT	3/8" = 9.5 mm	2
GS31056	3/8" NPT	5/16" = 7.9 mm	2
GS31157	3/8" NPT	1/4" = 6.4 mm	2



FILTRO GASOLINA — FUEL FILTER — FILTRO BENZINA — FILTRE À ESSENCE

REF	OEM
REC35-53336	908034



REF	OEM
REC35-49088A2	312456 381690



REF	OEM
REC984491	984491



REF	OEM
REC982230	982230

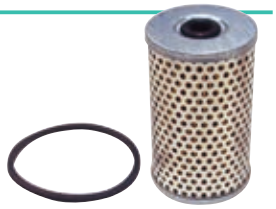

REF	OEM
REC981911	981911



REF	OEM
REC1397-2150	983870



FILTRO DE ACEITE — OIL FILTER — FILTRO OLIO — FILTRE A HUILE

REF	OEM	
REC35-06003	778864	4L GM



REF	OEM	
REC35-06004	173834 502903	V6 GM



REF	OEM	
REC35-06007	502900	2.3L, V8, 302, 351



REF	OEM	
RACS3228UL	173233 502901	V8 GM



REF	OEM	
REC502900	502900	2.3L, V8, 302, 351 Ford



REF	OEM	
REC3517857	174796 502904	Ford 7.5L / 460



RACORS | RACORS | RACCORDI | RACCORDS

REF		
GS30430	8 mm	2
GS30431	10 mm	2

GOLDENSHIP



ORIENTABLES
GUIDEBLE
ORIENTABILE
ORIENTABLE

REF		
GS30432	8 mm	2
GS30433	10 mm	2

GOLDENSHIP



REF				
RAC1/2X16	1/2"	16 mm	500 900 1000	1
RAC1/2X18	1/2"	18 mm		1
RAC1/2X20	1/2"	20 mm		1
RAC3/8X10	3/8"	10 mm		1
RAC3/8X12	3/8"	12 mm		1
RAC3/8X14	3/8"	14 mm		1

RACOR



REF	NPT	NPT		
RAC1/2F-1/2M	7/8"	1/2"	900 1000	1
RAC3/8F-3/8M	3/4"	3/8"	500	1

RACOR



REF	NPT		
BRA125-3/16x1/4	1/4"	3/16"	1
BRA125-1/4x1/2	1/2"	1/4"	1
BRA125-5/16x3/8	3/8"	5/16"	1
BRA125-3/8x3/8	3/8"	3/8"	1
BRA125-3/8x1/2	1/2"	3/8"	1
BRA125-1/2x3/8	3/8"	1/2"	1
BRA125-1/2x1/2	1/2"	1/2"	1
BRA125-1/2x3/4	3/4"	1/2"	1
BRA125-5/8x3/8	3/8"	5/8"	1
BRA125-5/8x3/4	3/4"	5/8"	1
BRA125-3/4x3/4	3/4"	3/4"	1
BRA125-1x3/4	3/4"	1"	1
BRA125-1/4X3/8	1/4"	3/8"	1



REF			
GS31066	1/4" NPT	5/16" = 7.9 mm	2
GS31055	3/8" NPT	3/8" = 9.5 mm	2
GS31056	3/8" NPT	5/16" = 7.9 mm	2

GOLDENSHIP



MANGUERA CARBURANTE | FUEL HOSE | TUBO DI CARBURANTE | TUYAU DU CARBURANT

Tubo de goma para el transporte de carburante (diesel o gasolina). Construida en goma negra (NBR). Contenido aromático no superior al 60%. Resistente a la abrasión de los agentes marinos.

Long length rubber hose, suitable for loading diesel, bio-diesel and unloaded fuel for marine pleasure craft inboard engines up to 24 m.

Tubo in gomma per il passaggio di carburante (diesel o benzina). In gomma nera (NBR). Per motori entrobordo su imbarcazioni da diporto fino a 24m.

Tuyau en caoutchouc pour le passage du carburant (diesel ou essence). Caoutchouc noir (NBR). Pour moteurs in-bord sur bateaux de plaisance jusqu'à 24m.

ht hoses technology

CARBO/7840/A1

REF	Ø (mm)						Lloyd's Register
GS35049	6x16	14 bar	35 mm	-30°C ~ 100°C	30 bars	40 m	Rina CE 0474 Lloyd's Register 96/00/127
GS35050	8x17	14 bar	50 mm			40 m	
GS35051	10x19	14 bar	60 mm			40 m	
GS35052	12x22	10 bar	75 mm			20 m	
GS35053	16x26	10 bar	100 mm			40 m	
GS35054	19x30	10 bar	115 mm			20 m	
GS35055	25x37	10 bar	250 mm			x m	

SAE J 1527 - 2004
USCG A1 R1
ISO 7840 A-1 2004 CE



De goma para diesel y gasolina sin plomo. Ideal para fueraborda. Refuerzos texiles internos. Muy flexible. Contenido aromático 50%.

Rubber Hose suitable for loading mineral oils, diesel and unloaded fuel

In gomma per diesel e benzina senza piombo. Ideale per motori fuoribordo. Tessuto interno rinforzato. Molto flessibile.

En caoutchouc pour diesel et essence sans plomb. Idéal pour les moteurs hors-bord. Tissu intérieur renforcé. Très flexible.

CARBUPOMP/10NL

REF	Ø (mm)				
GS35031	6x12	10 bar	50 mm	-25ºC ~80º C	50 m
GS35032	8x15	10 bar	65 mm		50 m



ISO R1307

Manguera para lineas de combustible. Con refuerzo termoplástico que le permite excelente flexibilidad y resistencia a los rayos UV. Color gris. Resistente al alcohol. Especialmente indicado para motores fueraborda.

Marine fuel hose for outboards. Fuel resistant thermo-plastic formulation with 2 spiral reinforcement provides excelent bendability and resistance to UV, aging and permeation by all marine fuels (gasoline/petrol and diesel) including alcohol blends.

Tubi per il condotto del carburante. Con rinforzo termoplastico che gli permette un'eccellente flessibilità e resistenza ai raggi UV. Resistente alle miscele di alcool. Indicato per motori fuoribordo.

Tuyau de carburant marin. La formulation thermoplastique avec 2 renforts en spirale offre une excellente flexibilité et résistance aux UV, au vieillissement et à la perméation de tous les carburants marins (essence et diesel), y compris les mélanges d'alcool.

REF	Ø		
TRI305-0566	8 mm 5/16"	15 m	1
TRI305-0386	10 mm 3/8"	15 m	1

SAEJ 1527
ISO-8469 B1

CE CERTIFIED



TRIDENT

ACCESORIOS PARA FILTROS / FILTER ACCESSORIES / ACCESSORI PER FILTRI / ACCESSORIES POUR FILTRES

LLAVES PARA FILTRO / FILTER KEY / CHIAVE DA FILTRO / CLÉ À FILTRE

REF
RACRK22628

RACOR



REF	
REC70720	65 - 110 mm

RECMAR

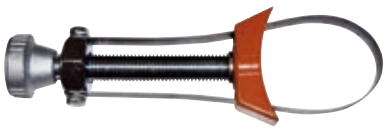

VÁLVULA DRENAJE AGUA DE FILTROS RACOR / DRAIN VALVE FOR RACOR FILTERS / VALVOLA DRENAGGIO ACQUA PER FILTRI RACOR / VANNE DE DRAINAGE D'EAU POUR FILTRE RACOR

REF
RACRK19492UL

RACOR



SENSOR DE AGUA PARA FILTROS DIESEL / WATER SENSOR FOR DIESEL FILTERS / SENSORE ACQUA PER FILTRI DIESEL / SONDE DE PRESENCE D'EAU POUR DIESEL

REF
RECRK21069

RECMAR



DIESEL

RELOJ SENSOR DE AGUA / WATER ALARM / ALLARME SENSORE ACQUA / ALARME SENSOR D'EAU

REF
RACRK20726

RACOR



BOMBA COMBUSTIBLE MECÁNICA — MECHANICAL FUEL PUMP — POMPA COMBUSTIBILE MECCANICA — POMPE CARBURANT MÉCANIQUE

REF	OEM	
REC3855276	981650	GM V8, 305, 307, 350

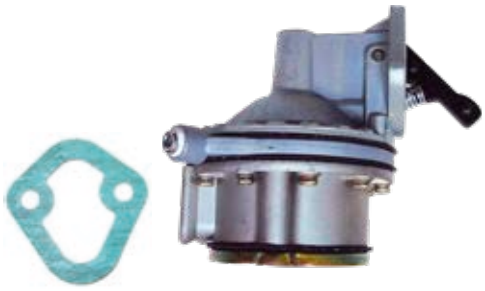

REF	OEM	
REC62092T	982063	FORD V8, 302



REF	OEM
REC86234A4	985603 982240 985602



REF	OEM
REC982997	982997



BOMBA COMBUSTIBLE ELÉCTRICA — ELECTRICAL FUEL PUMP — POMPA COMBUSTIBILE MECCANICA — POMPE CARBURANT MÉCANIQUE

new

REF	OEM		
REC3858261	3858261 3857986 3854620	432, 434, 502, 52 43f, 50f, 57f	8 PSI



CARBURADORES — CARBURETORS — CARBURATORE — CARBURATEUR

REF	OEM	
REC1347-818619R02	382733 980530 982217 984180 381498 772831	ROCHESTER 2 BB



REF	OEM	
REC1347-816373A4	981705 982223 983855 981359 982215 981564 985822 981803 981428	ROCHESTER 4 BB



REF	OEM	
REC1347-9661A3	382821 383766 384194	ROCHESTER 4 BB



REF	OEM	
MP426422	3854087 772846	3.0L (1991-94) 2.0L HO

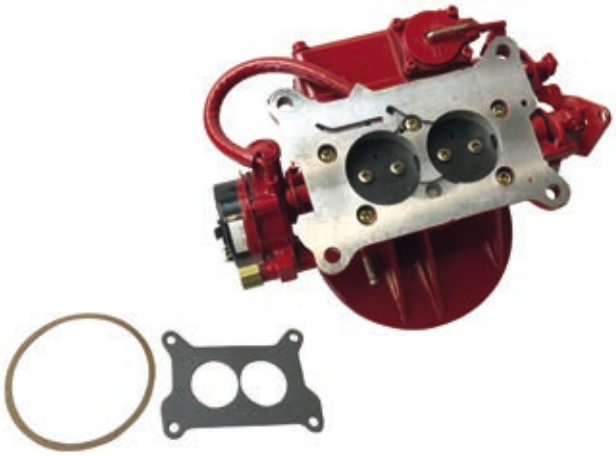

REF	OEM	
RM21610333	3854086	3.0L (1995-97)



JUNTAS BASE — BASE GASKETS — GUARNIZIONE BASE — JOINTS DE BASE

REF	OEM	
REC315055	315055	
REC27-8079821	909758	ROCHERSTER
REC3853283	3853283	
REC908765	908765	



REC315055

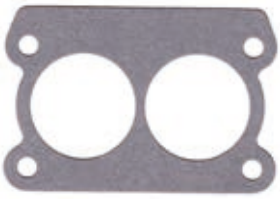

REC27-8079821



REC3853283



REC908765

KITS DE CARBURADOR | CARBURETORS KITS | KIT CARBURATORE | CARBURATEURS KIT

REF	OEM
REC1396-5238	982539



REF	OEM
REC1397-6367A1	508459



REF	OEM
REC823427A1	982384



REF	OEM
REC823426A1	979659 384743 983864 383918

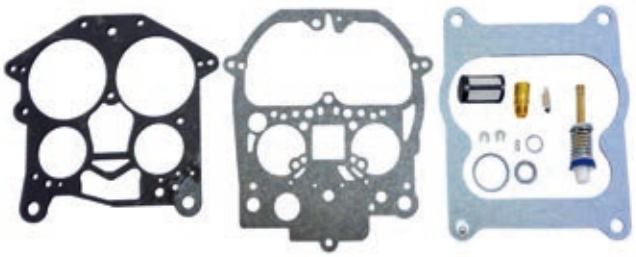

REF	OEM
REC1397-5831	508452



REF	OEM
REC1396-4656	982537 982538

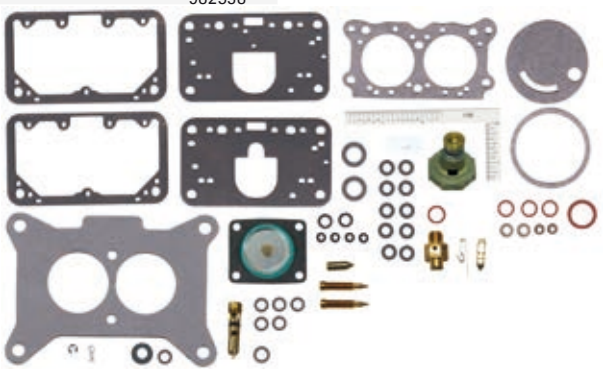

REF	OEM
REC841994	984487 983073

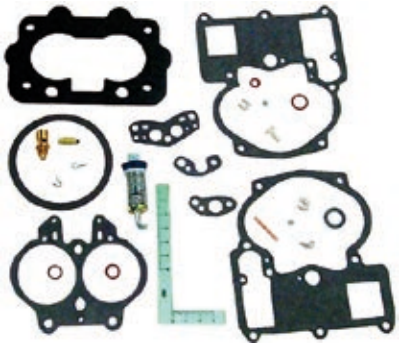

REF	OEM
REC982386	381400 982386



REF	OEM
REC985052	985052



REF	OEM
REC21533394	987438 987440 987485 21533394



REF	OEM
REC986799	986784 986799

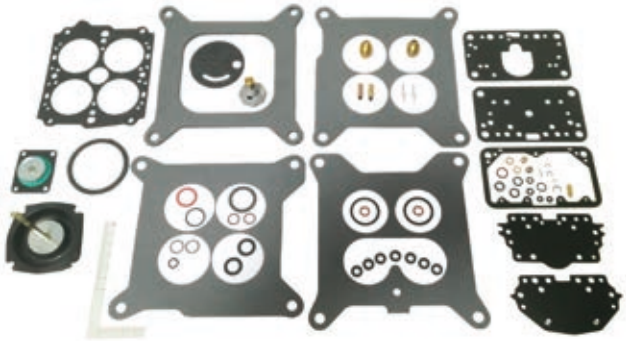

REF	OEM
REC3854105	987313 3854105

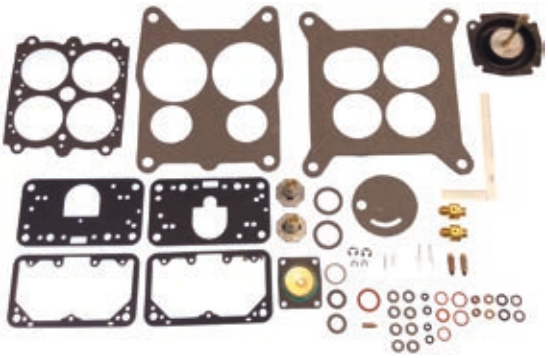

REF	OEM
REC823427A1	982384



REF	OEM
REC3854020	986796 3854020 3854347



REF	OEM
REC986782	986782

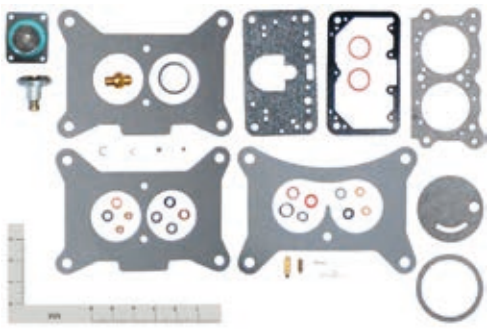

REF	OEM
REC987315	987315

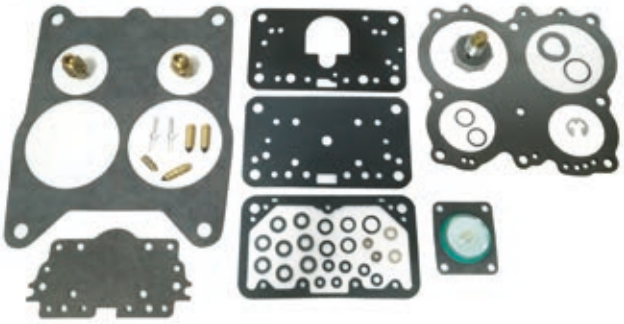

BOYAS — FLOATS — GALLEGGIANTI — FLOTEURS

REF	OEM
REC1397-3327	383087 983871



REF	OEM
REC1397-2060	381389



GUÍA CARBURADORES — GUIDE CARBURETORS — GUIDA CARBURATORI — GUIDE DES CARBURATEURS

		COD.	CARB.	OEM.
80	1968-69	R2, 2GC	REC1347-818619R02	382733 772831
90	1970-71	R2, 2GC	REC1347-818619R02	382733 772831
155	1967-72	R2, 2GC	REC1347-818619R02	772831
165	1972-76	R2, 2GC	REC1347-818619R02	979821 98053
185	1989	R2, 2GC	REC1347-818619R02	984180
200	1966-68	R2, 2GC	REC1347-818619R02	381494
210	1968-72	R4, 4MV	REC1347-9661A3	382821 383766
215, 225, 230	1971-76	R4, 4MV	REC1347-9661A3	382821
230 (800 Series)	1979-89	R4, 4MV	REC1347-816373A4	981705 982223
245	1972-75	R4, 4MV	REC1347-9661A3	384194
250	1970-74	R4, 4MV	REC1347-9661A3	384194
260 (800 Series)	1975-76	R4, 4MV	REC1347-9661A3	384194
260 (800 Series)	1979-89	R4, 4MV	REC1347-816373A4	982223
3.0L	1991-94		MP426422	772846
3.0L	1995-97		RM21610333	3854086
3.8L (4V)	1979-85	R4, 4MV	REC1347-816373A4	983855
4.3L (4V)	1979-89	R4, 4MV	REC1347-816373A4	983855
5.0L (GM)(4V)	1979-89	R4, 4MV	REC1347-816373A4	982223
5.7L (4V)	1979-89	R4, 4MV	REC1347-816373A4	982223
305, 350 CI, I/B,	1977-83	R4, 4MV	REC1347-816373A4	981359 982215 981564 982223
350 (4V)	1988-89	R4, 4MV	REC1347-816373A4	985822
454 CI, I/B	1977-78	R4, 4MV	REC1347-816373A4	981803 981428

GUÍA KIT CARBURADORES GUIDE CARBURETORS KIT GUIDA KIT CARBURATORI GUIDE DES KIT CARBURATEURS

		COD.	MOD.	KIT	
80	1968-69	R2	2GC	REC823427A1	REC1397-2060
90	1970-71	R2	2GC	REC823427A1	REC1397-2060
100	1972-73	C1	RBS	REC1398-3089	
120	1965-71	C1	RBS	REC1398-3089 (2 CARB)	
120	1972-85	R2	2GC	REC982386	REC1397-2060
140	1973-85	R2	2GC	REC823427A1	REC1397-2060
155	1967-72	R2	2GC	REC982386	
165	1972-76	R2	2GC	REC823427A1	REC1397-2060
170	1974	H2	2300	REC1396-4656	
175	1975-77	H2	2300	REC1396-4656	
185	1978-81	R2	2GE	REC841994	REC1397-2060
185	1989	H2	2300	REC1396-4656	
190	1974-77	H2	2300	REC1396-4656	
200	1966-68	R2	2GC,V	REC982386	
200	1979-85	R2	2GE	REC841994	REC1397-2060
200	1989	H2	2300	REC1396-4656	
210	1968-72	R4	4MV	REC823426A1	REC1397-3327
215	1971	R4	4MV	REC823426A1	REC1397-3327
225	1972-76	R4	4MV	REC823426A1	REC1397-3327
230	1975-76	R4	4MV	REC823426A1	REC1397-3327
230	1979-89	R4	4MV	REC823426A1	REC1397-3327
235	1975-77	H4	4160	REC1396-5238	
235	1989	H4		REC985052	
240	1978	H4		REC985052	
245	1972-75	R4	4MV	REC823426A1	REC1397-3327
250	1970-74	R4	4MV	REC823426A1	REC1397-3327
250	1979	H4		REC985052	
260	1975-76	R4	4MV	REC823426A1	REC1397-3327
260	1979-89	R4	4MV	REC823426A1	REC1397-3327
290 JET	1974-75	R4	4MV	REC823426A1	REC1397-3327
2.3 L	1987-89	R2	2GE	REC841994	REC1397-2060
2.5L	1982-85	R2	2GC	REC982386	REC1397-2060
2.5L	1986-90	R2	2GE	REC841994	REC1397-2060
2.5L	1986	R2	2GC	REC823427A1	REC1397-2060
3.0L	1982-90	R2	2GC	REC823427A1	REC1397-2060
3.0L/HO	1991-92	H2	2300	REC21533394	
3.8L	1979-85	R2	2GE	REC841994	REC1397-3327
4.3L	1986-89	R2	2GE	REC841994	REC1397-2060
4.3L	1979-89	R4	4MV	REC823426A1	REC1397-3327
4.3/262	1989	R2	2GE	REC841994	REC1397-2060
4.3 HO	1990-92	H2	2300	REC3854020	
4.3'HO	1990-92	H4	4160	REC986799	
5.0L (GM)	1979-85	R2	2GE	REC841994	REC1397-2060
5.0L (GM)	1979-89	R4	4MV	REC823426A1	REC1397-3327
5.0L (Ford)	1989	H2	2300	REC1396-4656	
5.0 HO	1989-90	H2	2300	REC986782	
5.0 HO	1989-90	H4	4160	REC986799	
5.0 HO	1991	H4	4160	REC1396-5238	
5.7L	1979-89	R4	4MV	REC823426A1	REC1397-3327
5.7LE	1991-92	H4	4175	REC987315	
5.8L	1989	H4		REC985052	
7.5L	1987-88	H4		REC985052	
305 C.I.I./B	1977-79	R2	2GE	REC841994	REC1397-2060
305 C.I.I./B	1977-78	R4	4MV	REC823426A1	REC1397-3327
305 C.I.I./B	1979-83	R4	4MV	REC823426A1	REC1397-3327
305 C.I.I./B	1979-83	R4	4MV	REC823426A1	REC1397-3327
350	1988-89	R4	4MV	REC823426A1	REC1397-3327
350	1988	R2	2GE	REC841994	REC1397-2060
454 C.I.I/B	1977-78	R4	4MV	REC823426A1	REC1397-3327
454 HO	1991-92	H4	4150	REC3854105	
460 C.I.	1987-88	H4	-	REC985052	

SISTEMA ELÉCTRICO
ELECTRIC SYSTEM

SISTEMA ELETTRICCO
SYSTÈME ÉLECTRIQUE

SENSORES | SENSORS | SENSORE | CAPTEURS

SENSOR PRESIÓN DE ACEITE | OIL PRESSURE SENDER | SENSORE PRESIONE OLIO | SONDE PRESSION D'HUILE

REF	OEM	
REC8M0068784	3857532	80 PSI



SENSOR TEMPERATURA AGUA | WATER TEMPERATURE SENDER | SENSORE TEMPERATURA ACQUA | SONDE TEMPERATURE DE L'EAU

REF	OEM
REC3854159	3854159



REF	OEM	
REC806490T	3853787	3/8" 18NPT



REF	OEM
REC35-03752	



REF	OEM	
REC97258A1	171960	1/2" 14NPT



KIT TEMPERATURA Y PRESIÓN DE ACEITE CON ALARMA | COMPLETE TEMPERATURE & OIL PRESSURE WARNING KIT | KIT TEMPERATURA E PRESSIONE DELL'OLIO CON ALLARME | KIT SONDE TEMPERATURE ET PRESSION D'HUILE AVEC ALARME

REF	OEM
REC41400	





SENSOR TPS | TPS SENDER | SENSORE TPS | CAPTEUR TPS

REF	OEM
REC8M0125617	3855184



VACUÓMETRO. MAP | MAP SENSOR | VACUOMETRO. MAP | CAPTEUR MAP

REF	OEM
REC3850396	3850396



REF	OEM			
REC50-99417A2	982121 981078 988217	12V	9	4 en línea (Tornillos sujección misma altura) Duty standard rotation 4 in line. In line mounting holes. 4 in linea (viti di supporto parallele) 4 en ligne (vis de fixation parallèles)



REF	OEM			
REC0984628	984628	12V	10	FORD 2.3L & 5.8L Con 3 tornillos de anclaje. 3 mounting holes. Con 3 viti di supporto Avec 3 vis de support



REF	OEM			
REC0984536	984536 988013	12V	10	OMC 460 COBRA



REF	OEM	
REC0987883	3854194	Solenoide Solenoid Solenoide Solenoide



REF	OEM		
REC50-97499A2	981289 982202	12V 1.4 kW	9



REF	OEM			
REC50-808011A05	981288 984982	12V 1.4 kW	9	Contrarrotación o montaje en campana. Counter clockwise starter Controrotante montato nella campana. Contre rotation, installation dans une cloche.



REF	OEM			
RECRA122002		12V	10	Contrarrotación. Counter clockwise starter Controrotante. Contre rotation.



REF	OEM			
REC3854190	987811 3854190	12V	10	Ford 5.0L & 5.8L Con 2 tornillos de anclaje 2 mounting holes Con 2 viti di supporto Avec 2 vis de support

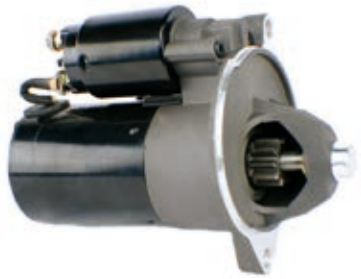

REF	OEM				
REC50-863007A1	3860566	12V 1.4 kW	11	14"	V6 & V8

	OEM
REC10-861788	10-861788



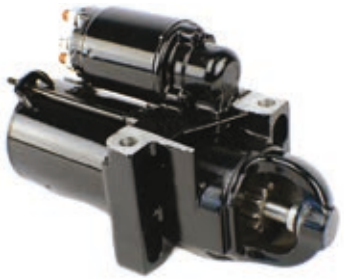

REF	OEM			
REC50-99418A2	3860566	12V	9	Tornillos sujección en diagonal Offset mounting holes Con viti in diagonale Avec vis de support en diagonal

	OEM
MP0180-001	10-812509184
REC10-861788	10-861788





REF	OEM				
REC50-806965A4	988217	12V	11	12 3/4"	COBRA 3.0 L

	OEM
MP0180-001	10-812509184
REC10-861788	10-861788





REF	OEM				
REC3885317		12V	11	HEAVY DUTY. GM 454 7.4L	Tornillos sujección en diagonal Offset mounting holes Con viti in diagonale Avec vis de support en diagonal

	OEM
REC10-861788	10-861788





REGULADOR REGULATOR REGOLATORE REGULATEUR

REF	OEM	
ARCVR-404	383440	PRESTOLITE



ALTERNADORES | ALTERNATORS | ALTERNATORI | ALTERNATEURS

ALTERNADORES

REF	OEM	
REC0985964	985964	12V 63 A



REF	OEM	
REC69729	988247	12V 63 A



ALTERNATORS

ALTERNATORI

REF	OEM	
REC3860769	986008 985964	12V 55 A

ALTERNATEUR



SOLENOIDES Y RELÉS | SOLENOID & RELAY | SOLENOIDI E RELÉ | SOLENOID ET RELAIS

SOLENOIDE

REF	OEM	
REC13037	1114356	DELCO REMY



REF	OEM
REC3853839	982187 985063



SOLENOID

SOLENOIDI

REF	OEM
REC0979774	979774



REF	OEM
REC0586180	383622 582708 345419 586180



SOLENOIDE

RELÉ BOMBA DE GASOLINA ELECTRICA | RELAY FOR FUEL ELECTRIC PUMP | RELE POMPA BENZINA ELETTRICA | RELAIS POUR POMPE BENZINE ÉLECTRIQUE

REF	OEM
REC3857533	3857533



TRIM

MOTOR TRIM | TRIM ENGINES | MOTORI TRIM | MOTEUR TRIM

REF	OEM	
REC0393988	393259 393988 394176 391264 983019 985237	2



REF	OEM	
REC0584107	387277 582048 582155	3



REF	OEM		
REC3853945	986280 3853945	2	COBRA (1987-93)



REF	OEM	
REC382138	986280 3853945	2



REF	OEM		
ARC6211	983318	3	2.5L, 3.0L (1979-85)



REF	OEM	
REC0982706	982058 982706	3



LATIGUILLOS TRIM COBRA / TRIM HOSES COBRA / TUBI TRIM COBRA / TUYAU TRIM COBRA

ESTRIBOR - BAJADA / STB - DOWN / TRIBORDO - DISCESA / TRIBORD - BAS

REF	OEM
REC3853854	3853854

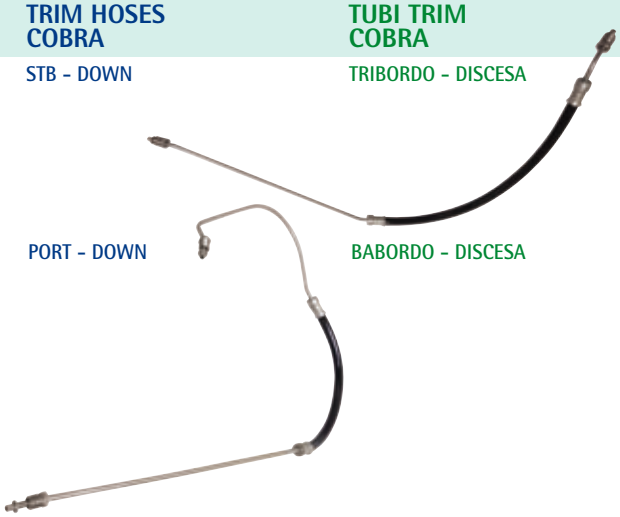

BABOR - BAJADA / PORT - DOWN / BABORDO - DISCESA / BABORD - BAS

REF	OEM
REC3853856	3853856

ESTRIBOR - SUBIDA / STB - UP / TRIBORDO - SALITA / TRIBORD - HAUT

REF	OEM
REC3853855	3853855



BABOR - SUBIDA / PORT - UP / BABORDO - SALITA / BABORD - HAUT

REF	OEM
REC3853857	3853857



SENSOR TRIM COBRA / TRIM SENSOR COBRA / SENSORE TRIM COBRA / CAPTEUR TRIM COBRA

new

REF	OEM
RM3850470	3850470 0983939 0984731



SISTEMA DE REFRIGERACIÓN
COOLING SYSTEM
SISTEMA DI RAFFREDDAMENTO
SYSTÈME DE REFROIDISSEMENT

TERMOSTATO THERMOSTAT TERMOSTATO THERMOSTAT

KITS DE TERMOSTATO — THERMOSTAT KITS — KIT TERMOSTATI — KITS DE THERMOSTAT

REF	OEM		
REC3853799	3853799	Chevys 4 cil. (1980+)	160 °C



REF	OEM		
REC3853983		7.4L (1994-97)	140°



3852111 3852071 3853983

REF	OEM	
REC13430		N000 Chevys 4 cyl. (1980+)



GUIA TERMOSTATOS — THERMOSTAT GUIDE — GUIDA TERMOSTATI — GUIDE THERMOSTAT

		TERMOSTATO THERMOSTAT TERMOSTATO THERMOSTAT	KIT
90	1970		REC13430
100	1972-73		REC13430
120	1969-80		REC13430
120	1980-81	REC3853799	REC3853799
140	1973-80		REC13430
140	1980-81	REC3853799	REC3853799
155	1969-72		REC13430
165	1972-76		REC13430
170	1974		REC13430
175	1975-77		REC13430
185	1978-80		REC13430
190	1974-77		REC13430
200	1979-81		REC13430
210	1969-72		REC13430
215	1971		REC13430
225	1971		REC13430
230	1979-81		REC13430
235	1971		REC13430

		TERMOSTATO THERMOSTAT TERMOSTATO THERMOSTAT	KIT
235	1975-77		REC13430
240	1978		REC13430
245	1972-75		REC13430
250	1970-73		REC13430
250	1979		REC13430
260	1979-81		REC13430
305	1977-82		REC13430
350	1977-82		REC13430
454	1977-82		REC13430
2.5L	1982-88	REC3853799	REC3853799
3.0L	1982-88	REC3853799	REC3853799
3.8L	1981-85		REC13430
4.3L	1985-86		REC13430
5.0L	1982-88		REC13430
5.7L	1982-88		REC13430
7.4L	1994-97		REC3853983
7.5L	1988		REC13430

CUERPO DE TERMOSTATO | THERMOSTATO HOUSING | CORPO TERMOSTATO | CORS DE THERMOSTAT

REF	OEM
BAOMC29-314810	314810 982201



REF	OEM
BAOMC29-910303	3854254



REF	OEM
BAOMC29-908216	908216



REF	OEM	
REC3850360	986292 987716 3850360	V6 & V8



REF	OEM	
HGE5470	985470	Ford 2.3L



BOMBAS ASPIRACIÓN AGUA MARINA | RAW MARINE WATER PUMPS | POMPE ASPIRAZIONE ACQUA MARINA | POMPE À EAU MARINE

BOMBAS DE AGUA | WATER PUMPS | POMPE ACQUA | POMPEÀ EAU

REF	OEM	
SHEG9901	3858847	4.3 & 8.2 (SX)

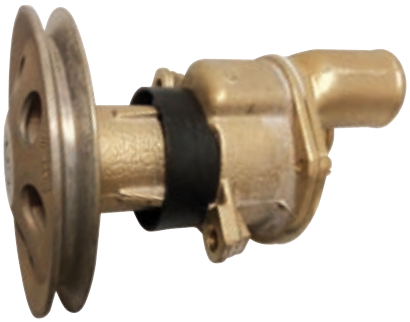

REF	OEM	
SHEG9903	3855079 3851982 3857794	3.0 L (SX)

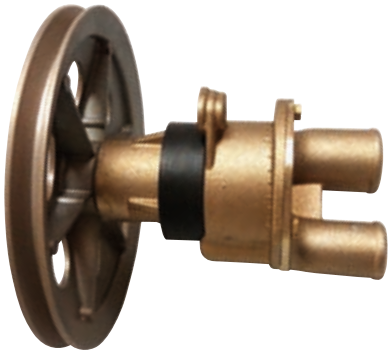

SISTEMA ENCENDIDO
IGNITON SYSTEM

SISTEMA DI ACCENSIONE
SYSTÈME D'ALLUMAGE

BOBINAS — COILS — BOBINE — BOBINES

BOBINA DE ENCENDIDO — IGNITION COIL — BOBINA DI ACCENSIONE — BOBINE D'ALLUMAGE

REF	OEM
REC300-00879	3852217

No usa resistencia externa.
Utilizar con encendido Prestolite.
Use without external resistor & Prestolite ignition
Non utilizza resistenza esterna.
Utilizzare con spinterogeno Prestolite
N'utilise pas de résistance externe.
A utiliser avec l'allumage Prestolite.



REF	OEM
REC1463-9382	3853548

Resistencia externa.
Utilizar con encendido convencional.
External resistor. Use with conventional ignition
Resistenza esterna.
Utilizzare con accensione convenzionale
Résistance externe.
A utiliser avec un allumage conventionnel.



REF	OEM	
REC3854161	3854161	FORD



REF	OEM	
REC3854002	3854002	GM



GUÍA DE BOBINAS DE ENCENDIDO — IGNITION COIL GUIDE — GUIDA BOBINA DI ACCENSIONE — GUIDE BOBINE D'ALLUMAGE

		REF
94-93	351 EFI King	REC3854161
	5.0L, 5.8L EFI	REC3854161
94-90	3.0L, 3.0L H.O.	REC3854002
94-89	5.0L, 5.0L H.O., 5.8L	REC1463-9382
	5.7L	REC1463-9382
94	7.4L	REC1463-9382
93-92	454, 454 H.O., 502	REC1463-9382
93	351 King	REC1463-9382
92-91	5.7L w/Electronic Ign.	REC1463-9382
92-90	5.7LE OMC Cobra (w/Conv. Ign.)	REC1463-9382
92	351	REC1463-9382
91-90	4.3L, 4.3L H.O. (2V Models)	REC1463-9382
90-87	2.3L	REC1463-9382
90	3.0L (PWC)	REC1463-9382
89-88	350 OMC King Cobra	REC1463-9382
	460 OMC King Cobra	REC1463-9382
89-85	2.5L, 3.0L, 4.3L Eng.	REC1463-9382
88-86	5.0L, 5.7L	REC1463-9382
88	370 OMC King Cobra	REC1463-9382

		REF
	335 OMC Cobra	REC1463-9382
87	340 OMC King Cobra	REC1463-9382
	7.5L	REC1463-9382
84-80	120, 140, 185, 200, 230, 260 HP	REC1463-9382
79	120, 140, 185,200,230,250, 260 HP	REC1463-9382
78	120, 140, 185, 225, 230, 240, 305, 350, 454HP	REC1463-9382
77	120, 140, 175, 190, 225, 230, 235 HP	REC1463-9382
76	120, 140, 165, 175, 190, 225, 230, 235 HP	REC1463-9382
75	120, 140, 165, 175, 190,225, 230,235,245,	REC1463-9382
74	120, 140, 165, 225, 245, 250, 290 HP	REC1463-9382
73	100, 120, 140, 165, 225, 245, 250 HP	REC1463-9382
72	100, 120, 155, 165, 210, 225, 245, 250 HP	REC1463-9382
71	90, 120, 155, 210, 215, 235, 250 HP	REC1463-9382

BUJÍAS | SPARK | CANDELE | BOUGIES

		CHAMPION	NGK
1990-87	2.3L Cobra	CHARS12YC	NGKTR5
1996	3.0L SX Cobra	CHARS12YC	NGKTR5
1995-90	3.0L Cobra HO	CHARS12YC	NGKTR5
1994-93	3.0L Cobra	CHARS12YC	NGKTR5
1992-87	3.0L Cobra	CHARV15YC4	NGKUR4
1996 (.460»)	4.3L SX Cobra	CHARV15YC4	NGKUR4
1996 (.708»)	4.3L SX Cobra	CHARS12YC	NGKTR5
1995-86	4.3L Cobra	CHARV15YC4	NGKUR4
1991-90	4.3L Cobra HO	CHARV15YC4	NGKUR4
1994-93	4.3L Cobra HO	CHARV15YC4	NGKUR4
1996 (Carb.)	5.0L SX Cobra	CHARV15YC4	NGKUR4
1996 (EFI)	5.0L SX Cobra	CHARS12YC	NGKTR5
1995-96 (Carb.)	5.0L Cobra	CHARV15YC4	NGKUR4
1995-89 (Carb.)	5.0L Cobra HO	CHARV15YC4	NGKUR4
1995-94	5.0L Cobra EFI	CHARS12YC	NGKTR5

		CHAMPION	NGK
1993	5.0L Cobra EFI	CHARV15YC4	NGKUR4
1996	5.7L SX Cobra	CHARV15YC4	NGKUR4
1992-86	5.7L King Cobra	CHARV15YC4	NGKUR4
1996 (Carb.)	5.8L SX Cobra	CHARV15YC4	NGKUR4
1996 (EFI)	5.8L SX Cobra	CHARS9YC	NGKTR5
1995-89 (Carb.)	5.8L Cobra	CHARV15YC4	NGKUR4
1995-92 (EFI)	5.8L Cobra	CHARS9YC	NGKTR5
1995-93 (EFI-HO)	5.8L King Cobra	CHARS9YC	NGKTR5
1996	7.4L SX Cobra	CHARV15YC4	NGKUR4
1995-90 (Carb.)	7.4L SX Cobra	CHARV15YC4	NGKUR4
1995 (EFI)	7.4L King Cobra	CHARV15YC4	NGKUR4
1993-91 (Carb.)	7.4L Cobra HO	CHARV15YC4	NGKUR4
1990-86	7.5L Cobra	CHARV15YC4	NGKUR4
1996	8.2L SX Cobra	CHARV15YC4	NGKUR4
1994-92	8.2L King Cobra	CHARV15YC4	NGKUR4

JUEGOS DE CABLES, ALTO RENDIMIENTO | HD SPARK PLUG WIRE SET | KIT CAVI CANDELE, ALTE PRESTAZIONI | KIT FAISCEAU DE BOUGIE

Núcleo del cable de Kevlar de 8 mm antimagnético. Funda de silicona amarilla. Terminales bujías con muelle de acero inox. Terminal del distribuidor de cobre. Terminales bobina. Silicona resistente a altas temperaturas. Garantía de 5 años.

Antimagnetic Kevlar core. Yellow silicone boot & jacket. SS snaplock. Brass distributor terminal. Coil terminals. High resistant silicone. 5 year warranty.

Nucleo del cavo di Kevlar da 8 mm antimagnetico. Copertura di silicone gialla. Terminali candele con molle di acciaio inox. Terminale lato spinterogeno in rame. Terminale Bobine. Silicone resistente alle alte temperature. Garanzia di 5 anni.

Noyau en Kevlar antimagnétique. Gaine en silicone jaune.Bornes de bougie d'allumage avec ressort en acier inoxydable. Terminal de distribution en laiton. Bornes de bobine. Silicone haute résistance. Garantie de 5 ans.

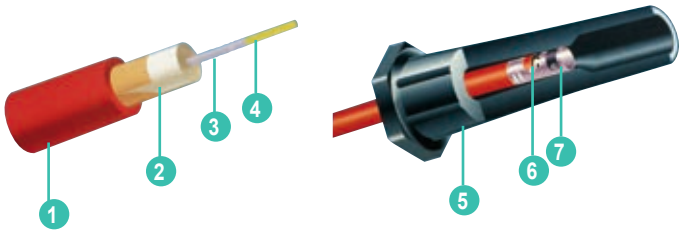

1	Camisa de silicona de 8 mm	8 mm silicone jacket	Rivestimento in silicone da 8 mm	Gaine silicone de 8mm
2	Látex resistente altas temperaturas	Heat resistant latex	Latex resistente alle alte temperature	Latex résistant à haute température
3	Acero inox	Stainless Steel	Acciaio inox	Acier inox
4	Núcleo de Kevlar	Kevlar core	Nucleo de Kevlar	Noyau de Kevlar
5	Capuchón de silicona	Silicone jacket	Rivestimento in silicone	Capuchon en silicone
6	Trenzado especial fibra de vidrio	Fiberglass braiding	Fibra di vetro	Tresse en fibre de verre
7	Terminal de acero inox	Stainless Steel terminal	Terminale di acciaio inox	Terminal en acier inox

	ARRANQUE IGNITION AVVIAMENTO DEMARRAGE				
	CYL	CONVEN.	ELECT.	REF	OEM
110 / 120 / 2.5L / 140 / 3.0L / 140 JET	4	✓		REC15-401	
3.0L / HO	4		✓	REC15-405	503748
185 (6 en línea | in line | in rete | en ligne)	6	✓		REC15-602	503748
3.8 L / 4.3 L (229, 262) V6	6	✓		REC15-604	
4.3L (262) V6	6		✓	REC15-601	503750
175 / 185 / 190 / 20 / 5.0 L - 5.7 L / (GM) (Mallory)	8	✓		REC15-801 REC15-806	503751
5.0 L - 5.8 L (FORD)	8	✓		REC15-806	503752 503755
5.0 L - 5.8 L - EFI (FORD)	8		✓	REC15-805	503753
225 / 230 / 235 / 240 / 250 / 260 (Mallory)	8	✓		REC15-801 REC15-806	503754
370 KING / 454 / 7.4 L / 502 / 8.2 L	8	✓		REC15-801	503752 503755
460 KING	8	✓		REC15-811	503752 503755

MÓDULOS IGNICIÓN — IGNITION MODULES — MODULI AVVIAMENTO — MODULES D'ALLUMAGE

REF	OEM
REC3854001	3854001 986642

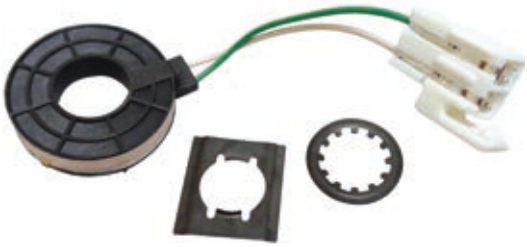

REF	OEM	
REC3854003	3854003 986650	4L, V8



DISTRIBUIDOR — DISTRIBUTOR — SPINTEROGENO — ALLUMEUR

REF	OEM	
REC195141		GM 4 CIL.



REF	OEM	
REC392-6316		FORD 302 CID V8



REF	OEM	
REC17177A1	17177A1	GM V8



REF	OEM	
REC392-6330	985764	FORD 351 CID V8

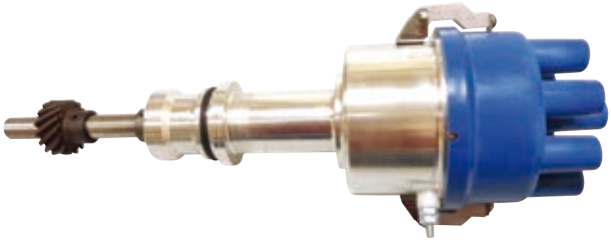

TAPA DISTRIBUIDOR — DISTRIBUTOR CAPS — CALOTTE SPINTEROGENO — TÊTE D'ALLUMEUR

REF	OEM	
REC393-9459Q1	380541	4 Cyl



REF	OEM	
REC33765T	980152	6 CYL



REF	OEM	
REC12532	382133	MALLORY V8



REF	OEM	
REC3854217	3854217	V8 EFI



REF	OEM	
REC33708	383587	V8



REF	OEM	
REC982209	982209	MALLORY V8



REF	OEM	
REC392-9086T	3853814	PRESTOLITE V6



REF	OEM	
REC835702	982336	PRESTOLITE V8 Clip



REF	OEM	
REC392-9766	3853815	PRESTOLITE V8 Con tornillo Screw on Con vite Avec vis



REF	OEM	
REC985218	985218	MALLORY 4 cyl



REF	OEM	
REC3854260	3854260	4 cyl



TAPA DISTRIBUIDOR , ENCENDIDO ELECTRONICO — DISTRIBUTOR CAPS ELECTRONIC IGNITION — CALOTTE SPINTEROGENO ACCESSIONE ELETTRONICO — TÊTE D'ALLUMEUR ALLUMEUR ÉLECTRONIQUE

REF	OEM	
REC3854331	3854331	DELCO V6



REF	OEM	
REC3854548	3854548	DELCO V8



CONDENSADORES — CONDENSERS — CONDENSATORI — CONDENSATEUR

REF	OEM	
REC8M6001249	987895	PRESTOLITE V6 & V8



REF	OEM	
REC8M6001217	382136 382125	MALLORY & DELCO V8



REF	OEM	
REC33662	380537	DELCO 4 & 6 CIL.



ROTORES — ROTORS — ROTORI — DOIGT D'ALLUMEUR

REF	OEM	
REC3853801	3853801	PRESTOLITE V6 & V8



REF	OEM	
REC834975	980892	PRESTOLITE V8 Clip



REF	OEM	
REC89825302	982211	MALLORY V8



REF	OEM	
REC841243	982342	MALLORY V8 Plano | Flat | piatto | plane



REF	OEM	
REC3854261	3854261	DELCO 4 cyl



REF	OEM	
REC3854549		DELCO V6



REF	OEM	
REC58217	384735	DELCO 4 & 6 cyl



REF	OEM	
REC3854311		DELCO V8 Encendido electrónico | Electronic ignition Accessione elettronico | Allumage éléctronique



PLATINOS — POINTS — PUNTINE — VIS PLATINEES

REF	OEM	
REC34235T	380538	DELCO 4 & 6 cyl



REF	OEM	
REC33700	380543	DELCO V8



REF	OEM	
REC391-5090	382135	MALLORY V8



REF	OEM	
REC8M6001219	980893 987136 987894	PRESTOLITE V6 & V8



KITS DE ENCENDIDO — TUNE UP KITS — KIT D'ACCENSIONE — KITS D'ALLUMAGE

REF	OEM
REC801766	



REF	OEM
REC3423A1	



REC58217 + REC34235T + REC33662

REF	OEM
REC392-6325Q1	



REC834975 + REC8M6001219 + REC8M6001249

REF	OEM
REC392-6324Q1	



REC3853801 + REC8M6001219 + REC8M6001249

REF	OEM
REC391-5090Q1	



REC89825302 + REC391-5090 + REC8M6001217

KITS DE CONVERSIÓN ELECTRÓNICO

Sustituyen condensadores y contactos por componentes electrónicos. Usa bobina, tapa y rotor estandard. Fácil instalación, una pieza y dos cables. Precisión entre 1/4" calibrado de 0 a 8000 rpm.

ELECTRONIC CONVERSION KITS

To subsitute condensers for electronic devices. Uses standard.coil, cap & rotor. Easy installation; one piece, two cables. Precisely calibrated between 1/4" from 0 to 8000.

KIT DI CONVERSIONE ELETTRICO

Sustituisce condensatori e contatti per componenti eletronici. Utilizza bobina, calotta e rotore standard. Facile installazione, una pz e due cavi. Precisione 1/4" calibrato da 0 a 8000.

KITS DE CONVERSION ÉLECTRONIQUE

Remplace les condensateurs et les contacts par des composants électroniques. Utilise une bobine, un couvercle et un rotor standard. Installation facile, une seule pièce et deux fils. Précision de 1/4" calibrée de 0 à 8000 rpm.

REF	
REC26900	GM 4 cyl.



REF	
REC26905	PRESTOLITE V8



REF	
REC26904	8 cyl. MALLORY YL / YD



REF	
REC26901	6 cyl. DELCO



MÓDULO SISTEMA CAMBIO

SHIFT ASSIST MODULE

MODULO SISTEMA CAMBIO

MODULE, SYTÊME DE CHANGEMENT

REF	OEM	CYL
REC987739	982755 984281 985902	4
	982774 984036 986342 987740	6
	982749 984276 984730 986837 987738 987739	8



PARTES DEL MOTOR
ENGINE PARTS

PARTI MOTORE
PIECES MOTEUR

JUNTAS PARA BASES GM Y FORD

Los Kits están diseñados y catalogados específicamente para aplicaciones marinas. Su calidad es superior a las juntas originales.

MARINE GASKETS TO GM & FORD ENGINES

The gaskets kits are designed and cataloged specifically for marine engine applications. Their quality is even better than the oem's.

GUARNIZIONI PER MOTORI GM E FORD

I kit di guarnizioni sono disegnati e fabbricati specificatamente per applicazioni marine. La qualità è assolutamente paragonabile a quelle originali.

JOINTS POUR MOTEURS GM ET FORD

Les kits sont spécifiquement conçus et catalogués pour les applications marines. Leur qualité est supérieure à celle des joints d'origine.

SERIE SERIAL				
1700-17099	KIT JUNTAS DE CULATA (pack individual)	CYLINDER HEAD GASKET (single-packed)	GUARNIZIONI TESTATA (quantità 1)	KIT JOINTS DE CULASSE (paquet individuel)
17100-17199	JUEGOS DE CONVERSIÓN Todas las juntas y retenes de aceite que no se encuentran en los juegos de culata. Incluye las juntas del cárter y los retenes.	CONVERSION KITS All gaskets and oil seals not found in a Head Set. This includes timing cover gaskets and seals, oil pan gaskets, and rear main bearing seals.	KIT PARTE BASSA Include tutte le guarnizioni ed i paraoli della parte bassa del motore, viene fornita anche la guarnizione della coppa dell'olio.	KITS DE CONVERSION Tous les joints d'étanchéité et joints d'huile qui ne sont pas contenus dans les kits de culasse. Comprend les joints de carter et les joints d'huile.
17200-17299	KIT DE DESCARBONIZACIÓN Todas las juntas y retenes necesarios para el trabajo de las válvulas, incluyendo la culata, la tapa de la válvula y juntas de colector de admisión y colector de escape. (Los juegos de 4 cyl no contienen las juntas del colector de admisión/ escape. Deben pedirse por separado).	HEAD SETS SERIES All gaskets and seals necessary for a valve griding job, including cylinder head gaskets, valve cover gaskets, intake & exhaust manifold gaskets (except 4 cyl intake set), and valve stem seals.	KIT PARTE ALTA (SMERIGLIO) Include tutte le guarnizioni ed i paraoli della parte alta del motore, testate, carter distribuzione, aspirazione e scarico. (Motori a 4 cyl. la guarnizione aspirazione è da ordinare separatamente).	KIT DE DÉCARBONISATION Tous les joints requis pour le travail sur les soupapes, y compris les joints de culasse, de couvercle de soupape, de collecteur d'admission et d'échappement (les kits 4 cylindres ne contiennent pas de joints de collecteur d'admission/échappement). Ils doivent être commandés séparément.
17300-17399	KIT DE COLECTOR DE ADMISIÓN Juntas de la parte de admisión del colector, retenes y juntas de la base del distribuidor.	INTAKE MANIFOLD SETS Intake manifold side gaskets, intake manifold end seals, and distributor mounting gasket.	KIT GUARNIZIONE ASPIRAZIONE Guarnizioni laterali del collettore di aspirazione, guarnizioni e guarnizioni della base del distributore.	KIT DE COLLECTEUR D'ADMISSION Joints de collecteur d'admission, joints d'étanchéité et joints de base de distributeur.
17400-17499	KIT DE COLECTOR DE ESCAPE (de colector a culata)	EXHAUST MANIFOLD (manifold-to-cylinder head gaskets)	KIT GUARNIZIONE SCARICO (dalla testata al collettore)	KIT COLLECTEUR D'ÉCHAPPEMENT (collecteur à la culasse)
17700-17749	KIT DE CONTRARROTACIÓN RETÉN TRASERO DEL CIGÜEÑAL Retenes traseros del cigüeñal diseñados para motores de rotación opuesta a la normal. (Retenes de rotación normal incluídos en el set de conversión)	REVERSE ROTATION REAR MAIN BEARING SEAL SETS Rear main bearing seals designed to seal a crankshaft which rotates in the opposite direction from normal (Standard rotation seal is included in conversion set)	PARAOLIO MOTORI CONTROROTANTI ALBERO MOTORE Nei motori rotazione STD il paraolio viene già incluso nel kit della parte bassa. (Guarnizioni a rotazione normale incluse nel set di conversione)	KIT CONTRE-ROTATION JOINTS D'HUILE DE VILEBREQUIN ARRIÈRE Joints de vilebrequin arrière conçus pour les moteurs à contre-rotation (joints à rotation normale inclus dans le kit de conversion).
17750-17799	KIT DE RETENES TAPA DEL CIGÜEÑAL DE CONTRARROTACIÓN Retenes de la tapa del cigüeñal diseñados para motores de rotación opuesta a la normal. (Retenes de rotación normal incluídos en el set de conversión).	REVERSE ROTATION TIMING COVER SEAL SETS SERIES Timing cover seals designed to seal crankshaft which rotates in the opposite direction from normal (standard rotation seal is included in Conversion set and Timing cover set)	PARAOLIO CARTER DISTRIBUZIONE CONTROTOTANTI Guarnizioni del coperchio dell'albero a gomiti progettate per motori controrotanti (le guarnizioni per la rotazione normale sono incluse nel set di conversione).	KIT DE JOINTS DE COUVERCLE DE VILEBREQUIN CONTRE-ROTATIF Joints de couvercle de vilebrequin conçus pour les moteurs à contre-rotation (joints à rotation normale inclus dans le kit de conversion).
17900-17949	KIT DE TAPA VÁLVULA Todas las juntas de las tapas de las válvulas para sellar el motor.	VALVE COVER SET SERIES All valve cover or push rod cover gaskets (and grommets if required) required to seal one engine.	KIT COPERCHIO PUNTERIE Tutte le guarnizioni del coperchio della valvola per sigillare il motore.	KIT DE COUVERCLE DE SOUPAPE Tous les joints de couvercle de soupape pour l'étanchéité du moteur.
17950-17999	KIT DE CÁRTER Todas las juntas y retenes del cárter de aceite, o la junta del cárter de aceite de goma moldeada de una pieza, necesarias para sellar un motor.	OIL PAN SETS SERIES All oil pan gaskets & seals, or one-piece molded rubber oil pan gasket, required to seal one engine.	GUARNIZIONE COPPA DELL'OLIO Tutte le guarnizioni e le tenute della coppa dell'olio, o la guarnizione in gomma stampata in un unico pezzo, necessarie per sigillare un motore.	KIT DE CARTER D'HUILE Tous les joints de carter d'huile, ou un joint de carter d'huile en caoutchouc moulé d'une seule pièce, nécessaires à l'étanchéité d'un moteur.

2.5L (100HP, 110HP, 120HP)

	REF	OEM	CULATA	CYLINDER HEAD	TESTATA	CULASSE
	REC17000	3853336 908611	JUNTA CULATA	CYLINDER HEAD	GUARNIZIONE TESTATA	JOINT DE CULASSE
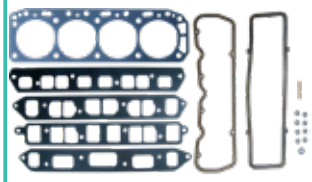	REC17200		KIT JUNTAS SUPERIOR	GASKET HEAD SET	KIT PARTE ALTA	KIT DE JOINTS SUPÉRIEURS
	REF		INFERIOR	CONVERSION	PARTE BASSA	PARTIE BASSE
	REC17100		Retén 2 piezas, 4 piezas junta cárter.	2 piece rear main bearing seal & 4 piece oil pan gasket	Paraolio in 2 px, 4 pz guarnizione coppa dell'olio.	Joint d'huile 2 pièces, joint de carter 4 pièces.

	REF		COLECTOR ADMISIÓN-ESCAPE	MANIFOLD INTAKE & EXHAUST	COLLETTORE ASPIRAZIONE-SCARICO	COLLECTEUR ADMISSION ET ÉCHAPPEMENT
	REC27-96429		COBRA	COBRA	COBRA	COBRA
	REC27-815528	3853256	⊘ COBRA	⊘ COBRA	⊘ COBRA	⊘ COBRA
	REF		CARTER	OIL PAN	COPPA DELL'OLIO	CARTER
	REC17950	3853343	KIT JUNTAS CARTER Retén trasero dos piezas, 4 piezas junta cárter.	GASKET OIL PAN SET Two piecerear main bearing seal & 4 piece oil pan gasket	KIT GUARNIZIONE Paraolio posteriore in 2, guarnizione coppa in 4 pz.	KIT DE JOINTS CARTER Joint arrière en deux parties, Joint de carter 4 pièces.
	REF		TAPA VÁLVULAS	VALVE COVER	COPERCHIO VALVOLE	COUVERCLE
	REC17900	3852693	Junta	Gasket	Guarnizione	Joint
	REF		TAPA EMPUJADORES	PUSH ROD COVER	COPERCHIO ASTE PUNTERIE	COUVERCLE
	REC17903	3856443	Junta	Gasket	Guarnizione	Joint

3.0L (115 HP), 3.0L HIGH OUTPUT (130 HP), 130/3.0L (130 HP), 140/3.0L (140 HP)

	REF	OEM	CULATA	CYLINDER HEAD	TESTATA	CULASSE
	REC17000	3853336 908611	JUNTA CULATA	CYLINDER HEAD	GUARNIZIONE TESTATA	JOINT DE CULASSE
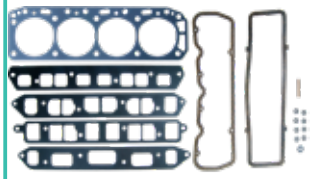	REC17200		KIT JUNTAS SUPERIOR	GASKET HEAD SET	KIT PARTE ALTA	KIT DE JOINTS SUPÉRIEURS
	REF	OEM	INFERIOR	CONVERSION	PARTE BASSA	PARTIE BASSE
	REC17102		KIT JUNTAS Retén 1 pieza. Junta cárter 1 pieza.	GASKET SET 1 piece rear main bearing seal 1 piece oil pan gasket	KIT Paraolio in 1 pz. Guarnizione coppa dell'olio in 1 pz.	KIT JOINTS INFERIEURS Joint spi 1 pièce. Joint de carter 1 pièce.
	REC17100		Retén 2 piezas, 4 piezas junta cárter.	2 piece rear main bearing seal & 4 piece oil pan gasket	Paraolio in 2 px, 4 pz guarnizione coppa dell'olio.	Joint d'huile 2 pcs, 4 pièces de joint de carter.
	REF		COLECTOR ADMISIÓN-ESCAPE	MANIFOLD INTAKE & EXHAUST	COLLETTORE ASPIRAZIONE-SCARICO	COLLECTEUR ADMISSION ET ÉCHAPPEMENT
	REC27-96429		COBRA con tapa de colector desmontable.	COBRA with removable end cap.	COBRA con coperchio collettore smontabile	COBRA avec couvercle de collecteur détachable
	REC27-815528		COBRA sólo H.O. Colector de una pieza	COBRA, H.O. only with 1 piece manifold.	COBRA solo H.O. collettore in 1 pz.	COBRA H.O. Collecteur de1 pièce.
	REC27-53354		⊘ COBRA.	⊘ COBRA.	⊘ COBRA	⊘ COBRA
	REF		CARTER	OIL PAN	COPPA DELL'OLIO	CARTER
	REC17950		KIT JUNTAS Retén trasero dos piezas, 4 piezas junta cárter.	GASKET SET Two piecerear main bearing seal & 4 piece oil pan gasket	KIT GUARNIZIONE Paraolio posteriore in 2, guarnizione coppa in 4 pz.	KIT DE JOINTS Joint arrière en deux parties, Joint de carter 4 pièces.
	REF		TAPA VÁLVULAS	VALVE COVER	COPERCHIO VALVOLE	COUVERCLE SOUPAPES
	REC17900	3852693	Junta	Gasket	Guarnizione	Joint
	REF		TAPA EMPUJADORES	PUSH ROD COVER	COPERCHIO ASTE PUNTERIE	COUVERCLE
	REC17903	3856443	Junta	Gasket	Guarnizione	Joint

4.3L (150, 160, 175, 180 & 205 HP)

	REF		CULATA	CYLINDER HEAD	TESTATA	CULASSE
	REC17010	3854299	Se necesitan dos	2 required	Necessarie 2	Deux sont nécessaires
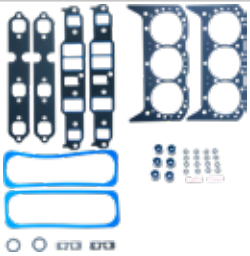	REC17210		Motor sin eje equilibrado. Incluye juntas tapa válvulas y retenes.	Engine without balance shaft; valve cover gskts and premium valve stem seals incl.	Motore senza asse bilanciato. Include guarnizione coperchio punterie e paraoli valvole.	Moteur sans arbre équilibré. Comprend les joints de couvre-soupapes et les joints d'étanchéité.
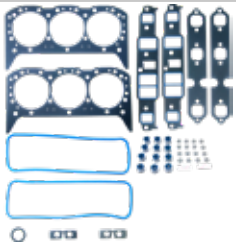	REC17211		Motor con eje equilibrado. Incluye juntas tapa válvulas y retenes.	Engine with balance shaft; valve cover gskts and premium valve stem seals incl.	Motore con asse bilanciato. Include guarnizione coperchio punterie e paraoli valvole.	Moteur avec arbre équilibré. Comprend les joints de couvre-soupapes et les joints d'étanchéité.
	REF		INFERIOR	CONVERSION	PARTE BASSA	PARTIE BASSE
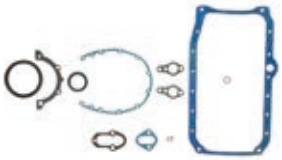	REC17115		Motor sin eje equilibrado con retén de una pieza y 1 pieza junta cárter. Incluye Junta de cárter.	Engine without balance shaft with one-piece rear main bearing seal & 1 piece oil pan gasket; oil pan gasket incl.	Motore senza asse bilanciato. Paraolio post in 1 pz e guarnizione coppa in 1 pz. Include la guarnizione del carter.	Moteur équilibré sans arbre, avec joint d'huile en une pièce et joint de carter en une pièce, y compris le joint de carter.
	REC17110		Motor sin eje equilibrado con retén de 2 piezas y 4 piezas junta cárter. Incluye Junta de cárter.	Engine without balance shaft with 2 pieced rear main bearing seal & 4 pieces oil pan gasket; oil pan gasket incl.	Motore senza asse bilanciato. Paraolio post in 2 pz e guarnizione coppa in 4 pz. Include la guarnizione del carter.	Moteur équilibré sans arbre avec joint d'huile 2 pièces et joint de carter 4 pièces. Comprend un joint de carter.
	REC17116		Retén de 1 pieza.	1 piece rear gasket.	Paraolio posteriore in 1 pz	joint spi 1 pièce
	REF		COLECTOR ADMISIÓN-ESCAPE	MANIFOLD INTAKE & EXHAUST	COLLETTORE ASPIRAZIONE-SCARICO	COLLECTEUR ADMISSION ET ÉCHAPPEMENT
	REC17310	857177	Junta Admisión-Escape	Intake-Exhaust Gasket	Guarnizione aspirazione-scarico	Joint admission et échappement
	REC27-99757	3853412	Kit juntas colector - escape	Exhaust gasket set	Kit guarnizione scarico	Kit joints collecteur d'échappement
	REF		CARTER	OIL PAN	COPPA DELL'OLIO	CARTER
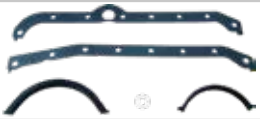	REC17970		KIT JUNTAS CARTER 4 piezas junta cárter. (Retén 2 piezas)	GASKET OIL PAN SET 4 piece oil pan gasket (2 piece Seal)	KIT GUARNIZIONE Guarnizione coppa in 4 pz. (paraolio 2 pz)	KIT JOINTS 4 pièces carter.
	REC17971	3852655	1 junta carter (Retén 1 pieza)	1 piece oil pan gasket (1 piece seal)	Guarnizione coppa in 1 pz (paraolio 1 pz)	1 joint carter (Joint d'huile 1 pièce)

	REF		TAPA VÁLVULAS	VALVE COVER	COPERCHIO VALVOLE	COUVERCLE SOUPAPES
	REC17920	3854300	Motor sin eje equilibrado.	Engine without balance shaft	Motore senza asse equilibrato.	Moteur sans arbre équilibré.
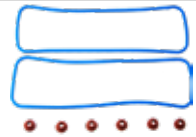	REC17921	3854942	Motor con eje equilibrado.	Engine with balance shaft	Motore con asse equilibrato.	Moteur avec arbre équilibré

5.0L (160, 170, 185 HP), 5.0L HIGH OUTPUT (175, 190, 200 HP), 175 (175 HP), 190 (190 HP)

	REF	CULATA	CYLINDER HEAD	TESTATA	CULASSE
	FEL17060	Se necesitan dos	2 required	Necessarie 2	Deux sont nécessaires
	FEL17261	Con tapa válvulas de aluminio. Incluye retenes de válvulas.	With cast aluminum valve covers. Premium valve stem seals included.	Con coperchio punterie in alluminio. Inlcude paraolio valvole.	Avec le cache culbuteur en Aluminium. Comprend les joints de queue de soupape.
	FEL17260	Incluye retenes de válvulas.	Premium valve stem seals included.	Include paraoli valvole.	Comprend les joints de queue de soupape.

	REF	INFERIOR	CONVERSION	PARTE BASSA	PARTIE BASSE
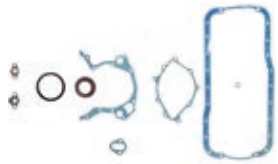	FEL17161	Retén 1 piezas, 1 pieza junta cárter. Incluye junta de cárter.	1 piece rear main bearing seal & 1 piece oil pan gasket. Rubber oil pan gasket included.	Paraolio in 1 pz, 1 pz guarnizione coppa dell'olio. Include guarnizione coppa.	Joint spi 1 pièce Joint de carter 1 pièce. Comprend le joint de carter.
	FEL17160	Retén 2 piezas, 4 piezas junta cárter.	2 piece rear main bearing seal & 4 piece oil pan gasket.	Paraolio in 2 pz, 4 pz guarnizione coppa dell'olio.	Joint spi 2 pièces Joint de carter 4 pièces.

	REF	COLECTOR ADMISIÓN-ESCAPE	MANIFOLD INTAKE & EXHAUST	COLLETTORE ASPIRAZIONE-SCARICO	COLLECTEUR ADMISSION ET ÉCHAPPEMENT
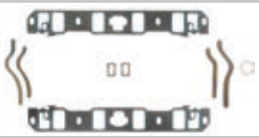	FEL17360	Kit junta admisión	Intake gasket set	Kit guarnizioni aspirazione	Kit joints d'admission
	REC3852455	Junta escape	Exhaust gasket	Guarnizione scarico	Joints collecteur d'échappement

	REF	CARTER	OIL PAN	COPPA DELL'OLIO	CARTER
	FEL17995	Retén 2 piezas	2 pieces seal	Paraolio 2 pz	Joint spi 2 pièces
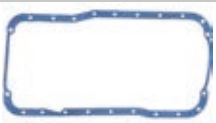	FEL17997	1 pieza junta de goma.	1 piece oil pan gasket	Guarnizione 1 pz	1 Joint de carter de caoutchouc.

	REF	RETÉN TRASERO CIGÜEÑAL	CRANKSHAFT REAR SEAL	PARAOLIO POSTERIORE ALBERO MOTORE	JOINT ARRIÈRE DE VILEBREQUIN
	FEL17746	Retén partido Contrarrotación, goma; 2 piezas	Split seal Rev. rotation, rubber; 2 piece	Controrotazione in 2 pz.	Joint fendu contre-rotatif, caoutchouc ; 2 pcs.

	REF	TAPA VÁLVULAS	VALVE COVER	COPERCHIO VALVOLE	COUVERCLE SOUPAPES
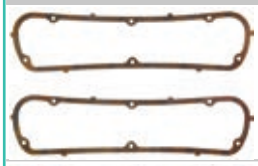	FEL17945	Con tapa de válvulas de acero	With iron valve cover	Con coperchio valvole in aciaio	Cache culbuteur en acier
	FEL17946	Con tapa válvulas de aluminio.	With cast aluminium valve covers.	Con coperchio valvole in alluminio.	Cache culbuteur en Aluminium

	REF	RETÉN DISTRIBUCIÓN	OIL SEAL TIMING COVER	PARAOLIO DISTRIBUZIONE	JOINT D'HUILE DE DISTRIBUTION
	REC3853341	Retén contrarrotación tapa distribución	Rev. rotation timing cover seal	paraolio contrarotazione	Joint contre-rotation couvercle distribution

5.0L V8 (185, 200, 225, 230 HP)

	REF		CULATA	CYLINDER HEAD	TESTATA	CULASSE
	REC17020	3853380	Se necesitan dos	2 required	Ne servono 2	2 sont nécessaries
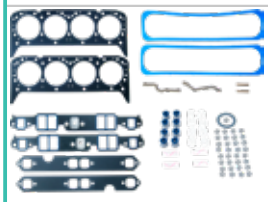	REC17224		Tornillo centro tapa válvulas. Incluye retenes válvulas.	With center bolt desing valve covers. Premium valve stem seals included.	Viti coperchio punterie al centro. Include paraoli valvole.	Cache culbuteur avec les vis centrales. Comprend les joints de queue de soupapes.
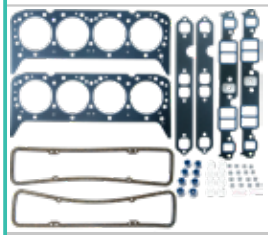	REC17220		Tornillo en el lateral tapa válvulas. Incluye retenes válvulas.	Rim bolt desing valve covers. Premium valve stem seals included.	Viti coperchio punterie nel perimetro. Include paraoli valvole.	Cache culbuteur avec les vis laterales. Comprend les joints de queue de soupapes.

	REF		INFERIOR	CONVERSION	PARTE BASSA	PARTIE BASSE
	REC17125		Retén de 1 pieza y junta cárter de 1 pieza Incluye junta de cárter.	One-piece rear main bearing seal & 1 piece oil pan gasket. Oil pan gasket included.	Paraolio in 1 peze e guarnizone coppa in 1 peze. Include paraolio coppa.	Joint spi 1 pièce. Joint de carter 1 pièce. Comprend le Joint spi.
	REC17120		Retén de 2 piezas y junta cárter de 4 piezas	Two-piece rear main bearing seal & 4 pieces oil pan gasket.	Paraolio in 2 peze e guarnizione coppa in 4 pezi.	Joint spi 2 pièces et joint de carter 4 pièces.

	REF		COLECTOR ADMISIÓN-ESCAPE	MANIFOLD INTAKE & EXHAUST	COLLETTORE ASPIRAZIONE-SCARICO	COLLECTEUR ADMISSION ET ÉCHAPPEMENT
	REC17320	856365	Kit Juntas Admisión-Escape	Intake-Exhaust Gasket Set	Kit guarnizioni aspirazione - SCARICO	Kit joints d'admission
	REC27-33395	856034	Kit juntas colector escape	Oil pan - exhaust gasket set.	Kit guarnizione Coppa olio - scarico.	Kit joints collecteur d'échappement.

	REF		CARTER	OIL PAN	COPPA DELL'OLIO	CARTER
	REC17982	3856138	Junta cárter 1 pieza. Junta de cárter incluida.	1 piece oil pan gasket. Molded rubber oil pan gasket included.	Guarnizione in 1 pz. Guarnizione coppa included.	Joint de carter 1 pièce.
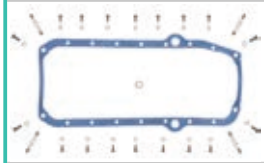	FEL17983		Junta 1 pieza. Para motores con retén trasero de 2 piezas.	1 piece molded rubber gasket for engines with Two-piece rear main bearing sea.	Guarnizione in 1 pz, paraolio posteriore in 2 px.	Joint de carter 1 pièce pour moteurs avec Joint spi arrière 2 pièces.
	REC17980	855729	Varilla aceite de BABOR con retén trasero de 2 piezas y junta cárter de 4 piezas.	PORT dipstick with 2-piece rear main bearing seal & 4-piece oil pan gasket.	Asticella olio a SINISTRO con paraolio posteriore in 2 pz. e guarnizione coppa da 4 pz.	Jauge d'huile à BABORD avec Joint spi arrière en 2 pièces et joint de carter en 4 pièces.
	REC17981		Varilla aceite de ESTRIBOR con retén trasero de 2 piezas y junta cárter de 4 piezas.	STARBOARD dipstick with 2-piece rear main bearing seal & 4-piece oil pan gasket	Asticella olio DESTRO con paraolio posteriore in 2 pz e guarnizione coppa da 4 pz.	Jauge d'huile à TRIBORD avec Joint spi arrière en 2 pièces et joint de carter en 4 pièces.
	REF		RETÉN TRASERO CIGÜEÑAL	CRANKSHAFT REAR SEAL	PARAOLIO POSTERIORE ALBERO MOTORE	JOINT ARRIÈRE DE VILEBREQUIN
	FEL17725		Retén partido Contrarrotación, goma; 2 piezas	Split seal Rev. rotation, rubber; 2 piece	Controrotazione in 2 pz.	Joint fendu contre-rotatif, caoutchouc ; 2 pcs.
	REF		TAPA VÁLVULAS	VALVE COVER	COPERCHIO VALVOLE	COUVERCLE SOUPAPE
	REC17931	3852687	Tornillo centro tapa válvulas con juntas.	Molded rubber gaskets incl.	Coperchio punterie con viti centrali.	Fixation par vis centrale
	REC17930	835096	Tornillo en el canto.	Rim bolt desing	Coperchio punterie con viti nel perimetro.	Fixation par 4 vis latérales.
	REF		RETÉN DISTRIBUCIÓN	OIL SEAL TIMING COVER	PARAOLIO DISTRIBUZIONE	JOINT D'HUILE DE DISTRIBUTION
	REC3853341		Reten contrarotación. Motor sin tapa distribución de plástico.	Reverse rotation oil seal. Engines without plastic timing cover.	Paraolio controrotante. Motore senza carter distribuzione in plastica.	Joint contre rotation pour moteur sans carter de distribution en plastique.

5.0L 307 OHV V8 (210, 215, 225, 230, 235, 245 HP)

	REF		CULATA	CYLINDER HEAD	TESTATA	CULASSE
	REC17030	3853380	Se necesitan dos	2 required	Ne servono 2	2 sont nécessaries
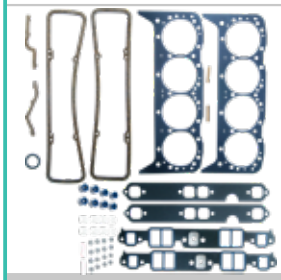	REC17230		Kit Juntas Superior Incluye retenes válvulas.	GASKET HEAD SET Premium valve stem seals incl.	KIT PARTE ALTA Incluso tenuta valvole	KIT DE JOINTS SUPÉRIEURS Comprend les joints de valve.
	REF		INFERIOR	CONVERSION	PARTE BASSA	PARTIE BASSE
	REC17120		Retén de 2 piezas y junta cárter de 4 piezas	Two-piece rear main bearing seal & 4	Paraolio posteriore in 2 pz e guarnizione coppa in 4 pz.	Joint d'huile en 2 parties et joint de carter en 4 parties.

	REF		COLECTOR ADMISIÓN-ESCAPE	MANIFOLD INTAKE & EXHAUST	COLLETTORE ASPIRAZIONE-SCARICO	COLLECTEUR ADMISSION ET ÉCHAPPEMENT
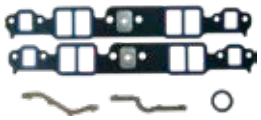	REC17320		Kit junta admisión-escape.	Intake-exhaust gasket set.	Kit guarnizioni aspirazione - scarico.	Kit joints d'admission.
	FEL17420		KIT JUNTAS COLECTOR -ESCAPE	OIL PAN - EXHAUST GASKET SET	KIT GUARNIZIONE COPPA OLIO - SCARICO	KIT JOINTS COLLECTEUR D'ÉCHAPPEMENT
	REF		CARTER	OIL PAN	COPPA DELL'OLIO	CARTER
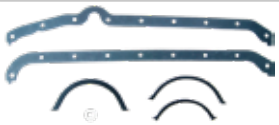	REC17980	855729	Varilla aceite a babor con retén trasero de 2 piezas y junta cárter de 4 piezas.	Port dipstick with 2-piece rear main bearing seal & 4-piece oil pan gasket.	Asticella olio a SINISTRO con praolio	Jauge d'huile côté bâbord avec joint d'huile arrière en 2 parties et joint de carter en 4 parties.
	REF		RETÉN TRASERO CIGÜEÑAL	Crankshaft rear seal	PARAOLIO POSTERIORE ALBERO MOTORE	JOINT D'HUILE DE VILEBREQUIN ARRIÈRE
	FEL17725		Retén Contrarrotación de 2 piezas	Split seal Rev. rotation, rubber; 2-piece	Controrotazione in 2 pz.	Joint d'huile contre-rotatif en 2 parties
	REF		TAPA VÁLVULAS	VALVE COVER	COPERCHIO VALVOLE	COUVERCLE DE SOUPAPE
	REC17930	835096	Tornillo lateral	Rim bolt desing	Coperchio punterie con viti nel perimetro.	Vis latérale
	REF		RETÉN DISTRIBUCIÓN	OIL SEAL TIMING COVER	PARAOLIO DISTRIBUZIONE	JOINT D'HUILE DE DISTRIBUTION
	REC3853341		Reten contrarotación. Motor sin tapa distribución de plástico.	Reverse rotation oil seal. Engines without plastic timing cover.	Paraolio controrotante. Motore senza carter distribuzione in plastica.	Joint contre rotation pour moteur sans carter de distribution en plastique.

5.7L V8, 250 (215, 220, 250, 260, 270, 290 HP), 250 KING COBRA (235, 270 HP), 260 (250, 260, 270, 290 HP)

	REF	CULATA	CYLINDER HEAD	TESTATA	CULASSE
	REC17030	Se necesitan dos	2 required	Ne servono 2	2 sont nécessaries
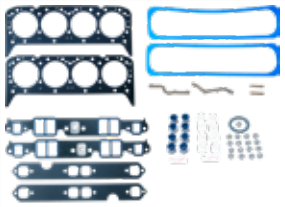	REC17214	Tornillo centro tapa válvulas. Incluye retenes válvulas.	With center bolt desing valve covers. Premium valve stem seals included.	Viti coperchio punterie al centro. Include paraoli valvole.	Cache culbuteur avec les vis centrales. Comprend les joints de queue de soupapes.
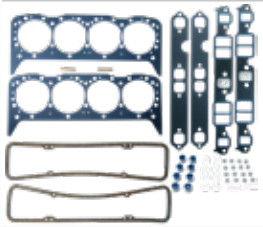	REC17230	Tornillo en el lateral tapa válvulas. Incluye retenes válvulas.	Rim bolt desing valve covers. Premium valve stem seals included.	Viti coperchio punterie nel perimetro. Include paraoli valvole.	Cache culbuteur avec les vis laterales. Comprend les joints de queue de soupapes.
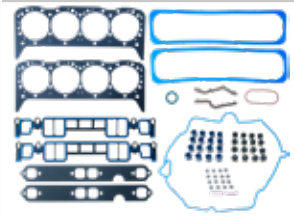	REC17232	Gen+ con juntas plástico colector admisión,con juntas tapa válvulas. Retenes válvulas incluidos.	GEN+ w/ plastic intake manifold gskts. valve cover gskts. incl; Premium valve stem seals incl.	Gen+ con guarnizione aspirazione in plastica con guarnizione in goma. Inclusi paraolio valvole.	Gen+ avec joints de collecteur d'admission en plastique, avec joints de cache-soupapes. Joints de soupape inclus.

	REF		INFERIOR	CONVERSION	PARTE BASSA	PARTIE BASSE
	REC17125		Retén de 1 pieza y junta cárter de 1 pieza Incluye junta de cárter.	One-piece rear main bearing seal & 1 piece oil pan gasket. Oil pan gasket included.	Paraolio in 1 peze e guarnizone coppa in 1 peze. Include paraolio coppa.	Joint spi 1 pièce. Joint de carter 1 pièce. Comprend le Joint spi.
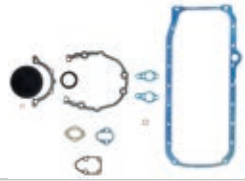	FEL17124		Con tapa de distribución de plástico, retén trasero de 1 pieza y junta cárter de 1 pieza. Junta de cárter incluída.	Eng. with plastic timing cover, 1 piece rear main bearing seal & 1 piece oil pan gskt. oil pan gskt incl.	Carter distribuzione in plastica, paraolio posteriore in 1 pz e guarnizione coppa olio in 1 pz.	Avec couvercle de distribution en plastique, joint arrière monobloc et joint de carter monobloc. Joint de carter inclus.
	REC17120		Retén de 2 piezas y junta cárter de 4 piezas	Two-piece rear main bearing seal & 4 pieces oil pan gasket.	Paraolio in 2 peze e guarnizione coppa in 4 pezi.	Joint spi 2 pièces et joint de carter 4 pièces.
	REF		COLECTOR ADMISIÓN-ESCAPE	MANIFOLD INTAKE & EXHAUST	COLLETTORE ASPIRAZIONE-SCARICO	COLLECTEUR ADMISSION ET ÉCHAPPEMENT
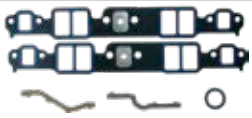	REC17320		KIT JUNTAS ADMISIÓN-ESCAPE Excepto GEN+ con juntas de admisión de plástico.	INTAKE-EXHAUST GASKET SET Excl. GEN+ eng. w/ plastic intake gaskets.	KIT GUARNIZIONI ASPIRAZIONE Eccetto Gen+ guarnizione in plastica	KIT DE JOINTS ADMISSION-ECHAPPEMENT Sauf GEN+ avec joints d'admission en plastique.
	FEL17420		KIT JUNTAS COLECTOR -ESCAPE	OIL PAN - EXHAUST GASKET SET	KIT GUARNIZIONE COPPA OLIO - SCARICO	KIT JOINTS COLLECTEUR D'ÉCHAPPEMENT
	REF		CARTER	OIL PAN	COPPA DELL'OLIO	CARTER
	REC17982	3856138	Junta cárter 1 pieza. Junta de cárter incluida.	1 piece oil pan gasket. Molded rubber oil pan gasket included.	Guarnizione in 1 pz. Guarnizione coppa included.	Joint de carter 1 pièce.
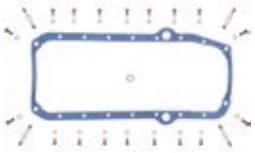	FEL17983		Junta 1 pieza. Para motores con retén trasero de 2 piezas.	1 piece molded rubber gasket for engines with Two-piece rear main bearing sea.	Guarnizione in 1 pz, paraolio posteriore in 2 px.	Joint de carter 1 pièce pour moteurs avec Joint spi arrière 2 pièces.
	REC17980	855729	Varilla aceite de BABOR con retén trasero de 2 piezas y junta cárter de 4 piezas.	PORT dipstick with 2-piece rear main bearing seal & 4-piece oil pan gasket.	Asticella olio a SINISTRO con paraolio posteriore in 2 pz. e guarnizione coppa da 4 pz.	Jauge d'huile à BABORD avec Joint spi arrière en 2 pièces et joint de carter en 4 pièces.
	REC17981		Varilla aceite de ESTRIBOR con retén trasero de 2 piezas y junta cárter de 4 piezas.	STARBOARD dipstick with 2-piece rear main bearing seal & 4-piece oil pan gasket	Asticella olio DESTRO con paraolio posteriore in 2 pz e guarnizione coppa da 4 pz.	Jauge d'huile à TRIBORD avec Joint spi arrière en 2 pièces et joint de carter en 4 pièces.
	REF		RETÉN TRASERO CIGÜEÑAL	Crankshaft rear seal	PARAOLIO POSTERIORE ALBERO MOTORE	JOINT D'HUILE DE VILEBREQUIN ARRIÈRE
	FEL17725		Retén Contrarrotación de 2 piezas	Split seal Rev. rotation, rubber; 2-piece	Controrotazione in 2 pz.	Joint d'huile contre-rotatif en 2 parties
	REF		TAPA VÁLVULAS	VALVE COVER	COPERCHIO VALVOLE	COUVERCLE DE SOUPAPE
	REC17931	3852687	Tornillo centro tapa válvulas con juntas.	Molded rubber gaskets incl.	Coperchio punterie con viti centrali.	Fixation par vis centrale
	REC17930	835096	Tornillo en el canto.	Rim bolt desing	Coperchio punterie con viti nel perimetro.	Fixation par 4 vis latérales.
	REF		RETÉN DISTRIBUCIÓN	OIL SEAL TIMING COVER	PARAOLIO DISTRIBUZIONE	JOINT D'HUILE DE DISTRIBUTION
	REC3853341		Reten contrarotación Motor sin tapa distribución de plástico.	Reverse rotation oil seal Engines w/o plastic timing cover.	Paraolio controrotante. Motore senza carter distribuzione in plastica.	Joint de contre-rotation du moteur sans cache-soupape en plastique.

5.8L (210, 215, 235 HP), 5.8L COBRA (240 HP), 250HP, 351 KING COBRA (260 HP)

	REF		CULATA	CYLINDER HEAD	TESTATA	CULASSE
	FEL17060		Se necesitan dos	2 required	Necessarie 2	Deux sont nécessaires
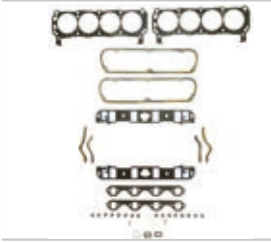	FEL17261	Con tapa válvulas de aluminio. Incluye retenes de válvulas.	With cast aluminum valve covers. Premium valve stem seals included.	Con coperchio punterie in alluminio. Inlcude paraolio valvole.	Avec le cache culbuteur en Aluminium. Comprend les joints de queue de soupape.	KIT DE JOINTS SUPÉRIEURS Avec couvercle de valves en AL. Comprend les joints de valve.
	FEL17260		Incluye retenes de válvulas.	Premium valve stem seals included.	Include paraoli valvole.	Comprend les joints de queue de soupape.
	REF		INFERIOR	CONVERSION	PARTE BASSA	PARTIE BASSE
	FEL17166		KIT JUNTAS INFERIOR Retén de una pieza y 1 pieza junta cárter, incluye junta de cárter de goma.	CONVERSION GASKET SET With 1 piece rear main bearing seal & 1 piece oil pan gasket; rubber oil pan gasket included	KIT PARTE BASSA Paraolio in 1 pz e guarnizione coppa dell'olio in 1 pz.	
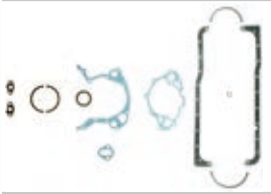	FEL17165		KIT JUNTAS INFERIOR Gene V con retén trasero de una pieza y junta cárter de 1 pieza. Junta cárter de goma incluida.	CONVERSION GASKET SET Gene V w/one piece rear main bearing seal & one piece oil pan gskt. Rubber oil pan gasket incl.	KIT PARTE BASSA Gen V con paraolio posteriore di 1 pz e guarnizione coppa in 1 pz.	KIT JOINTS
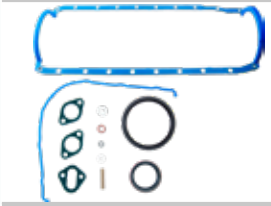	REC17146		KIT JUNTAS INFERIOR Retén de 2 piezas y 4 piezas junta cárter	CONVERSION GASKET SET With 2 piece rear main bearing seal & 4 piece oil pan gasket	KIT PARTE BASSA Paraolio in 2 pz e guarnizione coppa in 4 pz.	
	REF		COLECTOR ADMISIÓN-ESCAPE	MANIFOLD INTAKE & EXHAUST	COLLETTORE ASPIRAZIONE-SCARICO	COLLECTEUR ADMISSION ET ÉCHAPPEMENT
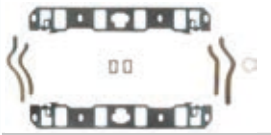	FEL17360	Kit junta admisión	Intake gasket set	Kit guarnizioni aspirazione	Kit joints d'admission	KIT JOINTS ADMISSION
	REC3852455	Junta escape	Exhaust gasket	Guarnizione scarico	Joints collecteur d'échappement	KIT JOINTS D'ÉCHAPPEMENT
	REF		CARTER	OIL PAN	COPPA DELL'OLIO	CARTER
	FEL17996		KIT JUNTAS	GASKET SET	KIT GUARNIZIONE	KIT JOINTS
	FEL17998		1 pieza junta cárter incluye junta de goma.	With 1 piece oil pan gasket. Rubber gasket included.	Guarnizione coppa in 1 pz.	
	REF		TAPA VÁLVULAS	VALVE COVER	COPERCHIO VALVOLE	COUVERCLE
	FEL17945	835096	Con tapa de válvulas de acero	With iron valve cover	Con coperchio valvole in aciaio	Cache culbuteur en acier
	FEL17946	3852687	Con tapa válvulas de aluminio.	With cast aluminium valve covers.	Con coperchio valvole in alluminio.	Cache culbuteur en Aluminium

7.4 L, 454 (330, 335 HP GEN IV)
HIGH OUTPUT KING COBRA (370 HP GEN IV, 330 HP GEN V),
454 KING COBRA (275, 295, 310 HP GEN IV, 295, 310 GEN V)

	REF	CULATA	CYLINDER HEAD	TESTATA	CULASSE
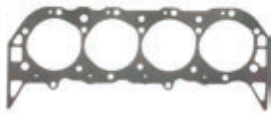	REC17040	Gene IV Se necesitan dos	Gene IV 2 required	Gene IV Necessarie 2	Gene IV Deux sont nécessaires
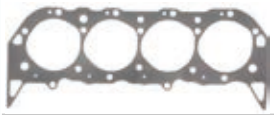	REC17042	Gene IV & V. Se necesitan 2.	Gene IV & V. 2 required	Gene IV e V. Necessarie 2	Gène IV & V. 2 requis.
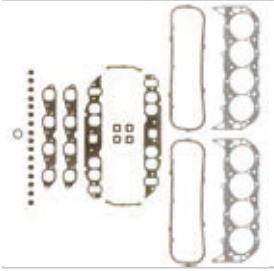	REC17240	Gen IV exc. H.O. con admisión ovalada. Se incluye retenes de válvula.	Gen IV exc. H.O. with oval intake ports. Premium valve stem seals included.	Gen IV escluso H.O. con aspirazione ovale. Inclusi paraoli valvole.	Gen IV exc. H.O. avec admission ovale. Joints de queue de soupape inclus.
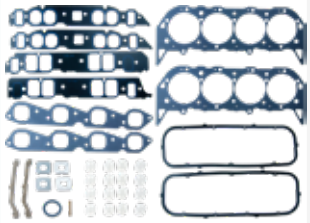	REC17241	Gene IV solo H.O. Se incluye retenes de válvula	Gen IV only H.O.premium valve stem seals incl.	Gene IV solo H.O. Inclusi paraoli valvole.	Gene IV uniquement H.O. Joints de soupape inclus
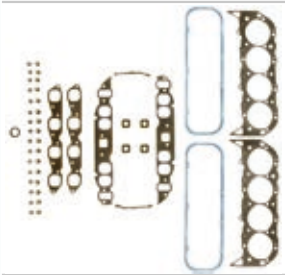	FEL17244	Gen V Excepto EFI o H.O.Juntas tapa valvula de goma.Se incluye retenes de válvula.	Gen V premium excl. EFI or H.O. Rubber valve cover & valve stem seals included.	Gen V escluso EFI o H.O. inclusi paraoli valvole.	Gen V sauf EFI et H.O. joints de couvre-soupapes et joints en caoutchouc inclus.
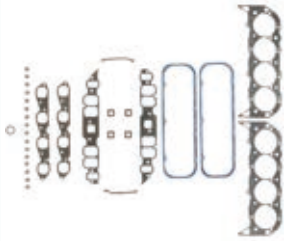	FEL17245	Gen V con retén trasero de una pieza y junta cárter de 1 pieza. Junta cárter incluída.	Gee V with one piece rear main bearing seal & one piece oil pan gasket. Oil pan gasket included.	Gene V con paraolio posteriore in 1 pz. e guarnizione coppa dell'olio in 1 pz.	Gen V avec joint arrière en 1 pièce et joint de carter en 1 pièce. Joint de carter inclus.
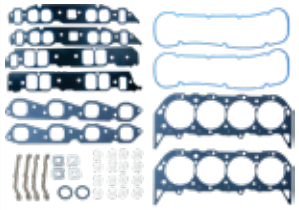	REC17242	Gen V EFI y H.O. Se incluye retenes de válvula. Gen VI. EFI y H.O. juntas de goma de tapa válvulas y retenes incluídos	Gen V. EFI or H.O. ; premium valve stem seals incl. Gen VI, EFI & H.O. molded rubber valve cover gaskets and premium valve stem seals incl.	Gen V EFI e H.O. Include paraoli valvole. Gen VI, EFI e H.O., guarnizione coperchio punterie e paraoli inclusi.	Gen V EFI et H.O. Joint de soupape inclus. Gen VI. EFI et H.O. joints de couvre-soupapes et joints en caoutchouc inclus.
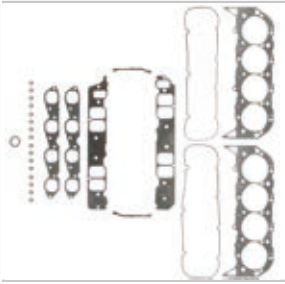	FEL17205	Gen VI sólo EFI Juntas de tapa válvulas y retenes incluídos.	Gen VI, EFI only, valve cover gaskets and premium valve stem seals incl.	Gen VI, solo EFI guarnizione rettangolare, guarnizione coperchio punterie e paraoli inclusi.	Gen V EFI uniquement. Joints de cache culbuteur et joints de queue de soupape inclus.

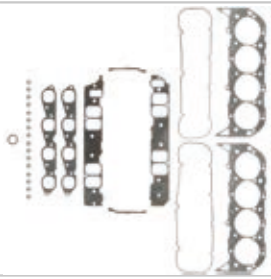	FEL17205	Kit Juntas Superior Gene VI sólo EFI Juntas de tapa válvulas y retenes incluídos.	GASKET HEAD SET Gen VI, EFI only, valve cover gaskets and premium valve stem seals incl.	KIT PARTE ALTA Gene VI, solo EFI guarnizione rettangolare, guarnizione coperchio punterie e paraoli inclusi.	KIT DE JOINTS SUPÉRIEURS Gene VI EFI uniquement Joints de couvre-soupape et joints inclus.
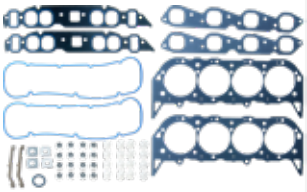	REC17243	Gene VI sólo H.O. Se incluye retenes de válvula.Juntas tapa valvula de goma.	Gen VI only H.O. Rubber valve cover & premium valve stem seals incl.	Gene VI solo H.O. Inclusi paraoli valvole.	KIT DE JOINTS SUPÉRIEURS Gene VI re Joints de couvre-soupape et joints inclus.

	REF	INFERIOR	CONVERSION	PARTE BASSA	PARTIE INFÉRIEUR
	REC17140	Gene IV con retén trasero de dos piezas y junta cárter de 4 piezas.	Gene IV w/two piece rear main bearing seal & four piece oil pan gasket.	Gene IV con paraolio posteriore in 2 pz. e guarnizione coppa dell'olio in 4 pz.	Gene IV avec joint arrière en deux parties et joint de carter en 4 parties.
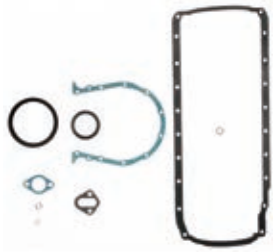	FEL17145	Gene V con retén trasero de una pieza y junta cárter de 1 pieza. Junta cárter incluída.	Gene V w/one piece rear main bearing seal & one piece oil pan gasket. oil pan gasket. incl.	Gene V con paraolio posteriore in 1 pz. e guarnizione coppa dell'olio in 1 pz.	Gene V avec joint arrière monobloc et joint de carter monobloc. Joint de carter inclus.
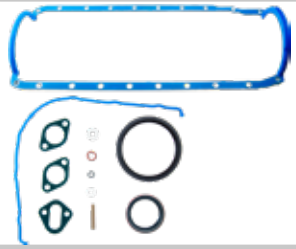	REC17146	Gene VI con retén trasero de una pieza y junta cárter de 1 pieza. Junta cárter incluída.	Gene VI w/one piece rear main bearing seal & one piece oil pan gasket. oil pan gasket. incl.	Gene VI con paraolio posteriore in 1 pz. e guarnizione coppa dell'olio in gomma in 1 pz.	Gene VI avec joint à lèvre arrière en une seule pièce et joint de carter en une seule pièce. Joint de carter inclus.

	REF	COLECTOR ADMISIÓN-ESCAPE	MANIFOLD INTAKE & EXHAUST	COLLETTORE ASPIRAZIONE-SCARICO	COLLECTEUR ADMISSION ET ÉCHAPPEMENT
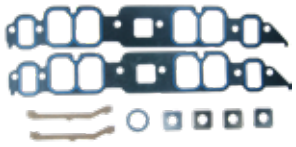	REC17341	KIT JUNTA ADMISIÓN Gene IV, V y VI sólo H.O. con admisión rectangular. Gene IV,- excl. H.O. con admisión rectangular.	INTAKE GASKET SET Gene IV, V & VI, H.O. only w/rectangular intake ports Gene IV excl. H.O. w/rect. intake ports	KIT GUARNIZIONI ASPIRAZIONE Gene IV, V e VI solo H.O. con aspirazione rettangolare Gene IV escluso H.O. con aspirazione rettangolare	KIT DE JOINTS D'ADMISSION Gènes IV, V et VI uniquement H.O. avec admission rectangulaire. Gene IV, excl. H.O. avec admission rectangulaire.
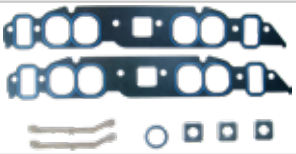	REC17340	KIT JUNTA ADMISIÓN Gene IV,excl. H.O. con admisión oval. Gene V y VI exc. EFI y H.O. con admisión ovalada.	INTAKE GASKET SET Gene IV excl. H.O. w/ oval intake ports Gene V & VI, excl. EFI & H.O.w/oval intake ports	KIT GUARNIZIONI ASPIRAZIONE Gene IV escluso H.O. con aspirazione ovale. Gene V e VI escluso EFI e H.O. con aspirazione ovale	KIT DE JOINTS D'ADMISSION Gene IV, excl. H.O. avec prise ovale. Gène V et VI exc. EFI et H.O. avec admission ovale.
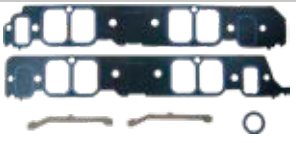	REC17342	KIT JUNTA ADMISIÓN Gene V y VI sólo EFI	INTAKE GASKET SET Gene V & VI, EFI only	KIT GUARNIZIONI ASPIRAZIONE Gene V e VI, solo EFI	KIT DE JOINTS D'ADMISSION Gene V et VI EFI uniquement
	REC27-46820 3852472	KIT JUNTA ESCAPE Gene IV, V y VI.	EXHAUST GASKET SET Gene IV, V & VI	KIT GUARNIZIONI SCARICO Gene IV, V e VI	KIT DE JOINTS D'ÉCHAPPEMENT Gène IV, V et VI.

	REF		RETÉN TRASERO CIGÜEÑAL	Crankshaft rear seal	PARAOLIO POSTERIORE ALBERO MOTORE	JOINT D'HUILE DE VILEBREQUIN ARRIÈRE
	REC26-14756		Gene IV Retén Contrarrotación dos piezas	Gene IV Reverse rotation oil seal Two-pieces	Gene IV Controrotante in 2 pz.	Gene IV Joint d'huile contre-rotatif en deux parties
	REF		TAPA VÁLVULAS	VALVE COVER	COPERCHIO VALVOLE	COUVERCLE SOUPAPES
	REC17935	856626	Gene IV	Gene IV	Gene IV	Gene IV
	FEL17936		KIT JUNTA TAPA VÁLVULAS Gen V solo EFI Juntas de goma incluidas.	GASKET SET Gene V EFI only molded rubber gaskets incl.	GUARNIZIONE COPERCHIO PUNTERIE Gen V solo EFI Kit tenute inclusa	KIT JOINTS DE COUVERCLE DE SOUPAPE Gen V seulement EFI. Comprend des joints en caoutchouc.
	REC17937	3853513	Gene V & VI	Gene V & VI	Gene V e VI	Gene V et VI

7.5 L, V8, 460 KING COBRA (295, 340 HP)

	REF	CULATA	CYLINDER HEAD	TESTATA	CULASSE
	FEL17068	JUNTA CULATA Se necesitan dos	CYLINDER HEAD 2 required	GUARNIZIONE TESTATA Necessarie 2	JOINT DE CULASSE Deux sont nécessaires
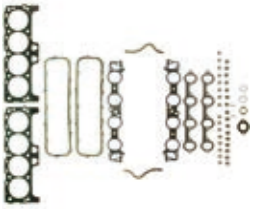	FEL17268	KIT JUNTAS CULATA Se incluye retenes de válvula	CYLINDER HEAD SET Premium valve stem seals included.	KIT GUARNIZIONE TESTATA Si includono paraoli valvole	KIT JOINTS DE CULASSE Comprend joints de valve.
	REF	INFERIOR	CONVERSION	PARTE BASSA	PARTIE INFÉRIEUR
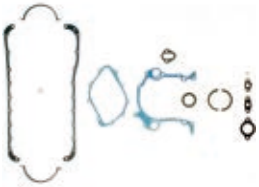	FEL17168	KIT JUNTAS INFERIOR Retén trasero de 2 piezas y junta cárter de 4 piezas.	CONVERSION GASKET SET 2 piece rear main bearing seal & 4 piece oil pan gasket.	KIT PARTE BASSA Paraolio posteriore in 2 pz e guarnizione coppa in 4 pz.	Gene IV avec joint arrière en deux parties et joint de carter en 4 parties.
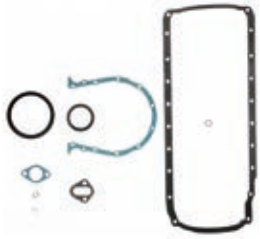	FEL17169	KIT JUNTAS INFERIOR con retén trasero de 2 piezas y junta cárter de 1 pieza. Junta cárter de goma incluida.	CONVERSION GASKET SET 2 piece rear main bearing seal & 1 piece oil pan gasket rubber oil pan gasket incl.	KIT PARTE BASSA paraolio posteriore di 2 pz e guarnizione coppa in 1 pz.	Gene V avec joint arrière monobloc et joint de carter monobloc. Joint de carter inclus.
	REF	COLECTOR ADMISIÓN-ESCAPE	MANIFOLD INTAKE & EXHAUST	COLLETTORE ASPIRAZIONE-SCARICO	COLLECTEUR ADMISSION ET ÉCHAPPEMENT
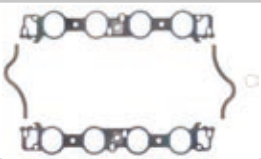	FEL17368	JUNTA ADMISIÓN 4 piezas	INTAKE GASKET 4 piece	GUARNIZIONE ASPIRAZIONE 4 pz	KIT DE JOINTS D'ADMISSION 4 pièces
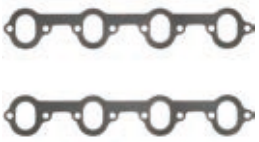	FEL17468	JUNTA ESCAPE	EXHAUST GASKET	GUARNIZIONE SCARICO	KIT DE JOINTS D'ADMISSION

	REF	TAPA VÁLVULAS	VALVE COVER	COPERCHIO VALVOLE	COUVERCLE SOUPAPES
	FEL17947	KIT JUNTAS	GASKET SET	KIT GUARNIZIONI	KIT JOINTS

	REF	CARTER	OIL PAN	COPPA DELL'OLIO	CARTER
	FEL17994	JUNTA CARTER 1 pieza, incluye junta de goma	GASKET OIL PAN 1 piece oil pan gasket. Rubber gasket included.	GUARNIZIONE 1 pz, guarnizione in gomma inclosa	JOINT DE CARTER 1 pièce avec joint en caoutchouc

8.2 L, 502 KING COBRA (375 HP GEN IV, 375 HP GEN V)

	REF	CULATA	CYLINDER HEAD	TESTATA	CULASSE
	FEL17049	JUNTA CULATA Gene IV, V & VI sólo H.O. super medida. Se necesitan 2.	CYLINDER HEAD Gene IV, V & VI H.O. only super bore 2 required	GUARNIZIONE TESTATA Gene IV, V & VI solo H.O. maggiorata. Necessarie 2	JOINT CULATA Gene IV, V & VI seulement H.O. super taille. 2 sont nécessaires.
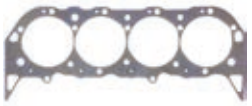	REC17048	JUNTA CULATA Gene IV, V & VI .Se necesitan 2.	CYLINDER HEAD Gene IV, V & VI. 2 required	GUARNIZIONE TESTATA Gene IV, V e VI. necessita 2	JOINT CULATA Gene IV, V & VI. 2 nécessaire.
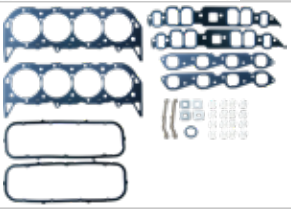	REC17248	KIT JUNTAS SUPERIOR Gene IV. Se incluye retenes de válvula.	GASKET HEAD SET Gene IV. premium valve stem seals incl.	KIT PARTE ALTA Gene IV. Se include paraoli valvole.	KIT DE JOINTS SUPÉRIEURS Gene IV. Joints de soupape inclus.
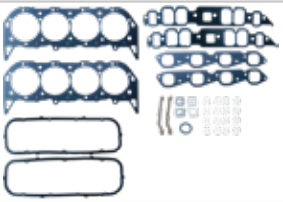	REC17248	KIT JUNTAS SUPERIOR Gene V exc. EFI. Se incluye retenes de válvula y juntas tapa válvulas.	GASKET HEAD SET Gen V exc. EFI; premium valve stem seals & valve cover gskts.incl.	KIT PARTE ALTA Gene IV escluso EFI. Include paraolio e guarnizione del coperchio valvola	KIT DE JOINTS SUPÉRIEURS GENE V exc. EFI. Les joints de soupape et les joints de couvercle de soupape sont inclus.
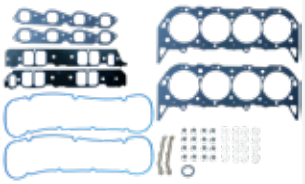	REC17207	KIT JUNTAS SUPERIOR Gene V solo EFI. Se incluye retenes de válvula y juntas tapa válvulas.	GASKET HEAD SET Gen V EFI only; premium valve stem seals & valve cover gskts. incl.	KIT PARTE ALTA Gene V solo EFI. Include paraolio e guarnizione del coperchio valvola	KIT DE JOINTS SUPÉRIEURS Gene V EFI uniquement. Les joints de soupape et les joints de couvercle de soupape sont inclus.
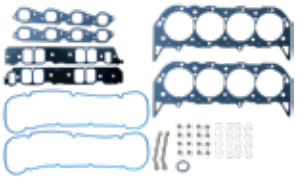	REC17207	KIT JUNTAS SUPERIOR Gene VI solo EFI. Se incluye retenes de válvula y juntas tapa válvulas	GASKET HEAD SET Gen VI EFI only; premium valve stem seals & valve cover gskts. incl.	KIT PARTE ALTA Gene VI solo EFI. Include paraolio e guarnizione del coperchio valvola	KIT DE JOINTS SUPÉRIEURS Gene VI EFI uniquement. Les joints de soupape et les joints de couvercle de soupape sont inclus.

	REF	INFERIOR	CONVERSION	PARTE BASSA	PARTIE BASSE
	REC17140	Gene IV con retén trasero de dos piezas y junta cárter de 4 piezas.	Gene IV w/two piece rear main bearing seal & four piece oil pan gasket.	Gene IV con paraolio posteriore in 2 pz. e guarnizione coppa dell'olio in 4 pz.	Gene IV avec joint arrière en deux parties et joint de carter en 4 parties.

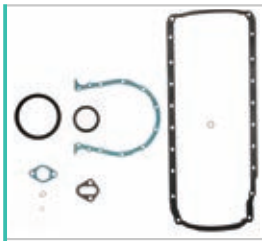	FEL17145	Gene V con retén trasero de una pieza y junta cárter de 1 pieza. Junta cárter incluida.	Gene V w/one piece rear main bearing seal & one piece oil pan gasket. oil pan gasket. incl.	Gene V con paraolio posteriore in 1 pz. e guarnizione coppa dell'olio in 1 pz.	Gene IV avec joint arrière en deux parties et joint de carter en 4 parties.
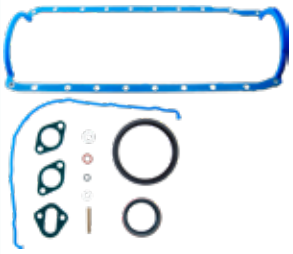	REC17146	Gene VI con retén trasero de una pieza y junta cárter de 1 pieza. Junta cárter incluida.	Gene VI w/one piece rear main bearing seal & one piece oil pan gasket. oil pan gasket. incl.	Gene VI con paraolio posteriore in 1 pz. e guarnizione coppa dell'olio in gomma in 1 pz.	Gene VI avec joint arrière monobloc et joint de carter monobloc. Joint de carter inclus.
	REF	COLECTOR ADMISIÓN-ESCAPE	MANIFOLD INTAKE & EXHAUST	COLLETTORE ASPIRAZIONE-SCARICO	COLLECTEUR ADMISSION ET ÉCHAPPEMENT
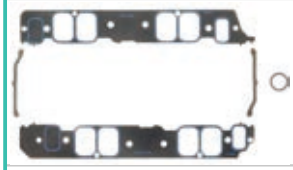	FEL17342	JUNTA ADMISIÓN Gene V & VI solo EFI	INTAKE GASKET Gene V & VI only EFI	GUARNIZIONE ASPIRAZIONE Gene V & VI solo EFI	JOINT ADMISSION Gen V et VI seulement EFI
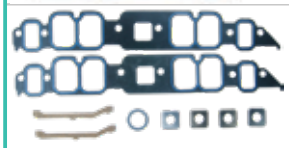	REC17341	KIT JUNTA ADMISIÓN Gene IV, V y VI sólo H.O. con admisión rectangular. Gene IV,excl. H.O. con admisión rectangular.	INTAKE GASKET SET Gene IV, V & VI, H.O. only w/rectangular intake ports Gene IV excl. H.O. w/rect. intake ports	KIT GUARNIZIONI ASPIRAZIONE Gene IV, V e VI solo H.O. con aspirazione rettangolare Gene IV escluso H.O. con aspirazione rettangolare	KIT DE JOINTS D'ADMISSION Gènes IV, V et VI uniquement H.O. avec admission rectangulaire. Gene IV, excl. H.O. avec admission rectangulaire.
	REC27-46820	KIT JUNTA ADMISIÓN Gene IV,excl. H.O. con admisión oval. Gene V y VI exc. EFI y H.O. con admisión ovalada.	INTAKE GASKET SET Gene IV excl. H.O. w/oval intake ports Gene V & VI, excl. EFI & H.O.w/oval intake ports	KIT GUARNIZIONI ASPIRAZIONE Gene IV escluso H.O. con aspirazione ovale. Gene V e VI escluso EFI e H.O. con aspirazione ovale	KIT DE JOINTS D'ADMISSION Gene IV, excl. H.O. avec prise ovale. Gène V et VI exc. EFI et H.O. avec adm ission ovale.
	REF	RETÉN TRASERO CIGÜEÑAL	CRANKSHAFT REAR SEAL	PARAOLIO POSTERIORE ALBERO MOTORE	JOINT D'HUILE DE VILEBREQUIN ARRIÈRE
	REC26-14756	Gene IV Retén Contrarrotación dos piezas	Gene IV Reverse rotation oil seal Two- pieces	Gene IV Controrotante in 2 pz.	Gene IV Joint d'huile contre-rotatif en deux parties
	REF	TAPA VÁLVULAS	VALVE COVER	COPERCHIO VALVOLE	COUVERCLE SOUPPES
	REC17935	Gene IV	Gene IV	Gene IV	Gene IV
	REC17937	Gene V & VI	Gene V & VI	Gene V e VI	Gene V et VI
	REF	CARTER	OIL PAN	COPPA DELL'OLIO	CARTER
	FEL17985	Junta Carter Gene IV Junta de 4 piezas.	GASKET OIL PAN Gene IV with 4 piece oil pan gasket.	GUARNIZIONE Gene IV, 4 pz,	JOINT Gen IV Joint de 4 pièces
	REC17986	Junta Carter 1 pieza, incluye junta de goma	GASKET OIL PAN 1 piece oil pan gasket. rubber gasket included.	GUARNIZIONE 1 pz, guarnizione in gomma inclusa	JOINT 1 pièce avec joint en caoutchouc

4 CIL 2.3L FORD

	REF		COLECTOR ADMISIÓN-ESCAPE	MANIFOLD INTAKE & EXHAUST	COLLETTORE ASPIRAZIONE-SCARICO	COLLECTEUR ADMISSION ET ÉCHAPPEMENT
	REC913393	913393	JUNTA ESCAPE	EXHAUST GASKET	GUARNIZIONE SCARICO	JOINT D'ÉCHAPPEMENT

8 CIL
5.0 L (160, 170, 185 HP), 5.0L HIGH OUTPUT (175, 190, 200 HP), 175 HP, 190 HP - FORD 302 (5.0)

	REF	CULATA	CYLINDER HEAD	TESTATA	CULASSE
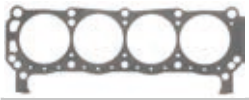	FEL17060	Se necesitan dos	2 required	Necessarie 2	Deux sont nécessaires
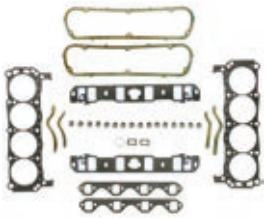	FEL17260	Incluye retenes de válvulas.	Premium valve stem seals included.	Include paraoli valvole.	Comprend les joints de queue de soupape.
	FEL17261	Con tapa válvulas de aluminio. Incluye retenes de válvulas.	With cast aluminum valve covers. Premium valve stem seals included.	Con coperchio punterie in alluminio. Inlcude paraolio valvole.	Avec le cache culbuteur en Aluminium. Comprend les joints de queue de soupape.

	REF	INFERIOR	CONVERSION	PARTE BASSA	PARTIE BASSE
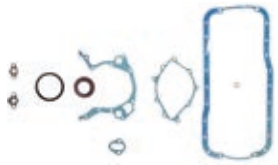	FEL17161	Retén 1 piezas, 1 pieza junta cárter. Incluye junta de cárter.	1 piece rear main bearing seal & 1 piece oil pan gasket. Rubber oil pan gasket included.	Paraolio in 1 pz, 1 pz guarnizione coppa dell'olio. Include guarnizione coppa.	Joint spi 1 pièce Joint de carter 1 pièce. Comprend le joint de carter.
	FEL17160	Retén 2 piezas, 4 piezas junta cárter.	2 piece rear main bearing seal & 4 piece oil pan gasket.	Paraolio in 2 pz, 4 pz guarnizione coppa dell'olio.	Joint spi 2 pièces Joint de carter 4 pièces.

	REF	COLECTOR ADMISIÓN-ESCAPE	MANIFOLD INTAKE & EXHAUST	COLLETTORE ASPIRAZIONE-SCARICO	COLLECTEUR ADMISSION ET ÉCHAPPEMENT
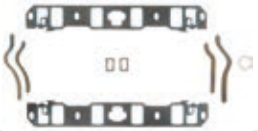	FEL17360	Kit junta admisión	Intake gasket set	Kit guarnizioni aspirazione	Kit joints d'admission
	REC3852455	Junta escape	Exhaust gasket	Guarnizione scarico	Joints collecteur d'échappement

	REF	CARTER	OIL PAN	COPPA DELL'OLIO	CARTER
	FEL17995	JUNTA CARTER 4 piezas.	GASKET OIL PAN 4 piece	GUARNIZIONE 4 pz,	JOINT 4 pièce
	FEL17997	JUNTA CARTER 1 pieza	GASKET OIL PAN 1 piece	GUARNIZIONE 1 pz,	JOINT 1 pièce

	REF	RETÉN TRASERO CIGÜEÑAL	CRANKSHAFT REAR SEAL	PARAOLIO POSTERIORE ALBERO MOTORE	JOINT D'HUILE DE VILEBREQUIN ARRIÈRE
	FEL17746	KIT JUNTAS Contrarrotación	GASKET KIT Rev. rotation	KIT GUARNIZIONE. controrotante	KIT JOINTS contro-rotatif
	REF	TAPA VÁLVULAS	VALVE COVER	COPERCHIO VALVOLE	COUVERCLE SOUPPES
	FEL17945	Con tapa de válvulas de acero	With iron valve cover	Con coperchio valvole in aciaio	Cache culbuteur en acier

8 CIL
5.8L (210, 215, 235 HP), 5.8L COBRA (240 HP), 250 HP, 351 KING COBRA (260 HP), FORD 351W

	REF	CULATA	CYLINDER HEAD	TESTATA	CULASSE
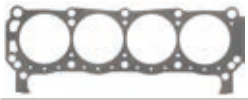	FEL17060	Se necesitan dos	2 required	Necessarie 2	Deux sont nécessaires
	FEL17260	Incluye retenes de válvulas.	Premium valve stem seals included.	Include paraoli valvole.	Comprend les joints de queue de soupape.
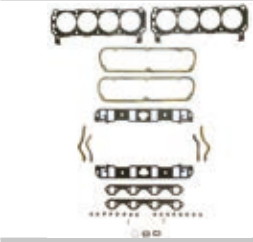	FEL17261	Con tapa válvulas de aluminio. Incluye retenes de válvulas.	With cast aluminum valve covers. Premium valve stem seals included.	Con coperchio punterie in alluminio. Inlcude paraolio valvole.	Avec le cache culbuteur en Aluminium. Comprend les joints de queue de soupape.
	REF	INFERIOR	CONVERSION	PARTE BASSA	PARTIE BASSE
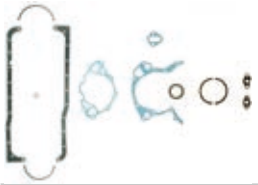	FEL17165	KIT JUNTAS INFERIOR 4 piezas.	CONVERSION GASKET SET 4 piece oil pan gasket.	KIT PARTE BASSA 4 pz	Gene IV avec joint arrière en deux parties
	FEL17166	KIT JUNTAS INFERIOR 1 pieza	CONVERSION GASKET SET 1 piece	KIT PARTE BASSA 1 pz	KIT JOINTS INFÉRIEUR 1 pièce
	REF	COLECTOR ADMISIÓN-ESCAPE	MANIFOLD INTAKE & EXHAUST	COLLETTORE ASPIRAZIONE-SCARICO	COLLECTEUR ADMISSION ET ÉCHAPPEMENT
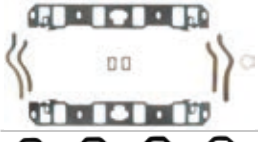	FEL17360	Kit junta admisión	Intake gasket set	Kit guarnizioni aspirazione	Kit joints d'admission
	REC3852455	Junta escape	Exhaust gasket	Guarnizione scarico	Joints collecteur d'échappement
	REF	CARTER	OIL PAN	COPPA DELL'OLIO	CARTER
	FEL17996	Junta Carter 4 piezas.	GASKET OIL PAN 4 piece	GUARNIZIONE 4 pz,	JOINT 4 pièce
	FEL17998	Junta Carter 1 pieza	GASKET OIL PAN 1 piece	GUARNIZIONE 1 pz,	JOINT 1 pièce

	REF	TAPA VÁLVULAS	VALVE COVER	COPERCHIO VALVOLE	COUVERCLE SOUPPES
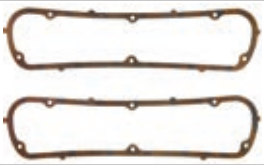	FEL17945	Con tapa de válvulas de acero	With iron valve cover	Con coperchio valvole in aciaio	Cache culbuteur en acier
	FEL17946	Con tapa válvulas de aluminio.	With cast aluminium valve covers.	Con coperchio valvole in alluminio.	Cache culbuteur en Aluminium

8 CIL
460 KING COBRA (295, 340 HP), FORD 460 (7.5L)

	REF	CULATA	CYLINDER HEAD	TESTATA	CULASSE
	FEL17068	JUNTA CULATA	CYLINDER HEAD	GUARNIZIONE TESTATA	JOINT CULATA
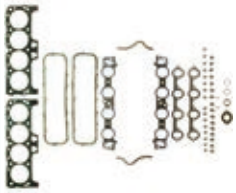	FEL17268	KIT JUNTAS Con tapa válvula sellada	GASKET SET Sealed valve cover	KIT GUARNIZIONE Coperchio valvole in acciaio	KIT DE JOINTS SUPÉRIEURS Avec couvercle valves hermétique
	REF	INFERIOR	CONVERSION	PARTE BASSA	PARTIE BASSE
	FEL17168	KIT JUNTAS INFERIOR 4 piezas.	CONVERSION GASKET SET 4 piece oil pan gasket.	KIT PARTE BASSA 4 pz	KIT JOINTS INFÉRIEUR 4 pièces
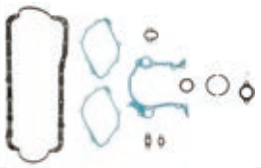	FEL17169	KIT JUNTAS INFERIOR 1 pieza	CONVERSION GASKET SET 1 piece	KIT PARTE BASSA 1 pz	KIT JOINTS INFÉRIEUR 1 pièce
	REF	COLECTOR ADMISIÓN-ESCAPE	MANIFOLD INTAKE & EXHAUST	COLLETTORE ASPIRAZIONE-SCARICO	COLLECTEUR ADMISSION ET ÉCHAPPEMENT
	FEL17368	KIT JUNTA ADMISIÓN	INTAKE GASKET SET	KIT GUARNIZIONE ASPIRAZIONE	KIT DE JOINTS D'ADMISSION
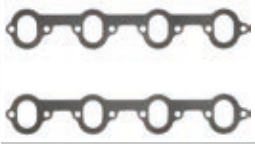	FEL17468	KIT JUNTA ESCAPE	EXHAUST GASKET SET	KIT GUARNIZIONE SCARICO	KIT DE JOINTS D'ÉCHAPPEMENT
	REF	CARTER	OIL PAN	COPPA DELL'OLIO	CARTER
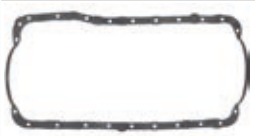	FEL17994	Junta Carter 1 pieza	GASKET OIL PAN 1 piece	GUARNIZIONE 1 pz,	JOINT 1 pièce
	REF	TAPA VÁLVULAS	VALVE COVER	COPERCHIO VALVOLE	COUVERCLE SOUPPES
	FEL17947	KIT JUNTAS	GASKET KIT	KIT GUARNIZIONE	KIT JOINTS

SISTEMA DE ESCAPE Y ADMISIÓN
EXHAUST & INTAKE SYSTEM
SISTEMA DI SCARICO E ASPIRAZIONE
SYSTEME D'ECHAPPEMENT ET D'ADMISSION

DESPIECES COLECTORES Y CODOS | MANIFOLDS & ELBOWS PARTS | PARTI COLLETTORI E GOMITI | PIÈCES COLLECTEURS ET COUDES

120HP, 4 CYL. 153CID / 2.5L GM SERIES 400

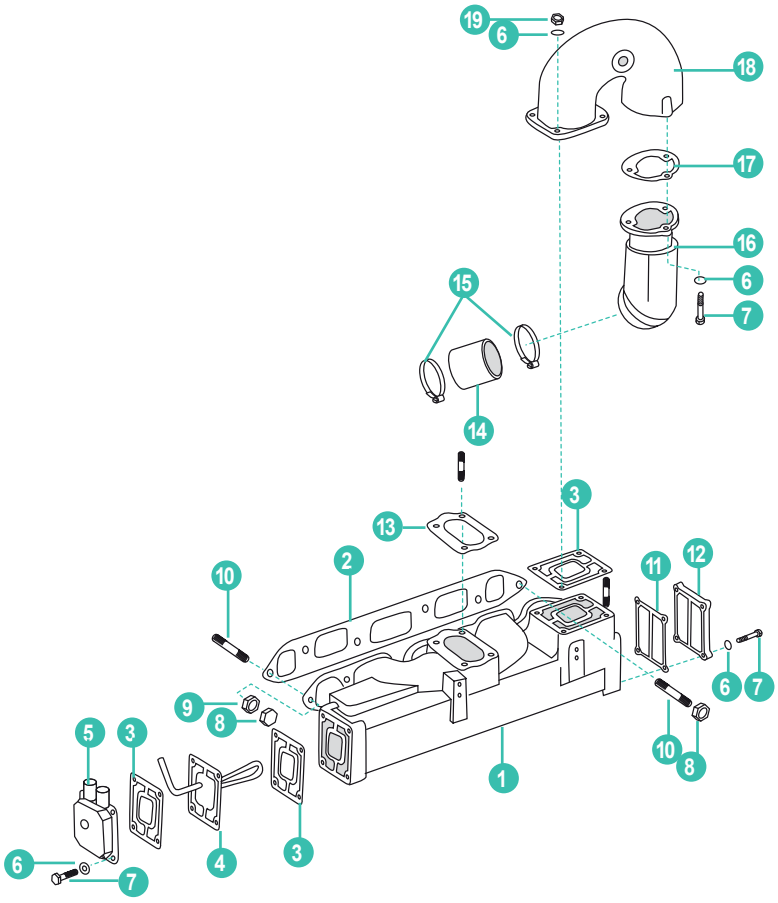

	REF	OEM				
1	BAOMC1-981462	981462	COLECTOR ESCAPE	EXHAUST MANIFOLD ASSEMBLY	COLLETTORE SCARICO	COLLECTEUR D'ÉCHAPPEMENT
2	REC27-52546	311068	JUNTA COLECTOR	GASKET - EXHAUST MANIFOLD	GUARNIZIONE	JOINT DE COLLECTEUR
3	REC311121	311121	JUNTA CODO A TAPA	GASKET - EXHAUST ELBOW AND END CAP	GUARNIZIONE	JOINT COUDE À COUVERCLE
4	BA1-380446	380446	INTERCAMBIADOR DE CALOR	HEAT EXCHANGE ASSEMBLY	SCAMBIATORE DI CALORE	ÉCHANGEUR
5	BA1-910280	910280	TAPA DELANTERA	END CAP - FRONT	COPERCHIO ANTERIORE	COUVERCLE FRONTAL
6	REC13-39107	306470	CIERRE	LOCKWASHER	CHIUSURA	RONDELLE
7	REC317624	552940	TORNILLO	SCREW	VITE	VIS
8	REC11-862903	552938	TUERCA	NUT	DADO	ÉCROU
9	REC13-35048	120177	CIERRE	LOCKWASHER	CHIUSURA	RONDELLE
10	REC16-56826	3852093	PERNO	STUD	PERNO	VIS
11	REC907761	907761	JUNTA TAPA	GASKET - END CAP	GUARNIZIONE	JOINT COUVERCLE
12	BAOMC1-907885	907885	TAPA TRASERA	END CAP - REAR	COPERCHIO POSTERIORE	COUVERCLE ARRIÈRE
13	REC315055	315055	JUNTA CARBURADOR	CARBURETOR GASKET	GUARNIZIONE CARBURATORE	JOINT DE CARBURATEUR
14	REC909371	909371	MANGUITO ESCAPE CODO	EXHAUST HOSE - ELBOW	MANICOTO SCARICO	DURITE D'ECHAPPEMENT
15	GS38320	3852604	ABRAZADERA MANGUITO	CLAMP - EXHAUST HOSE	FASCETTA MANICOTTO	COLLIER
16	REC909368	909368	CODO	ELBOW	GOMITO	COUDE
17	REC907764	907764	JUNTA CODO A TAPA	GASKET - ELBOW	GUARNIZIONE	JOINT COUDE À COUVERCLE
18	BAOMC20-980536	980536	CODO ESCAPE	EXHAUST ELBOW ASSEMBLY	GOMITO SCARICO	COUDE D'ÉCHAPPEMENT
19	REC3852142	306422	TUERCA	NUT	DADO	ÉCROU

120HP, 4 CYL. 153CID / 2.5L GM (1981-86)

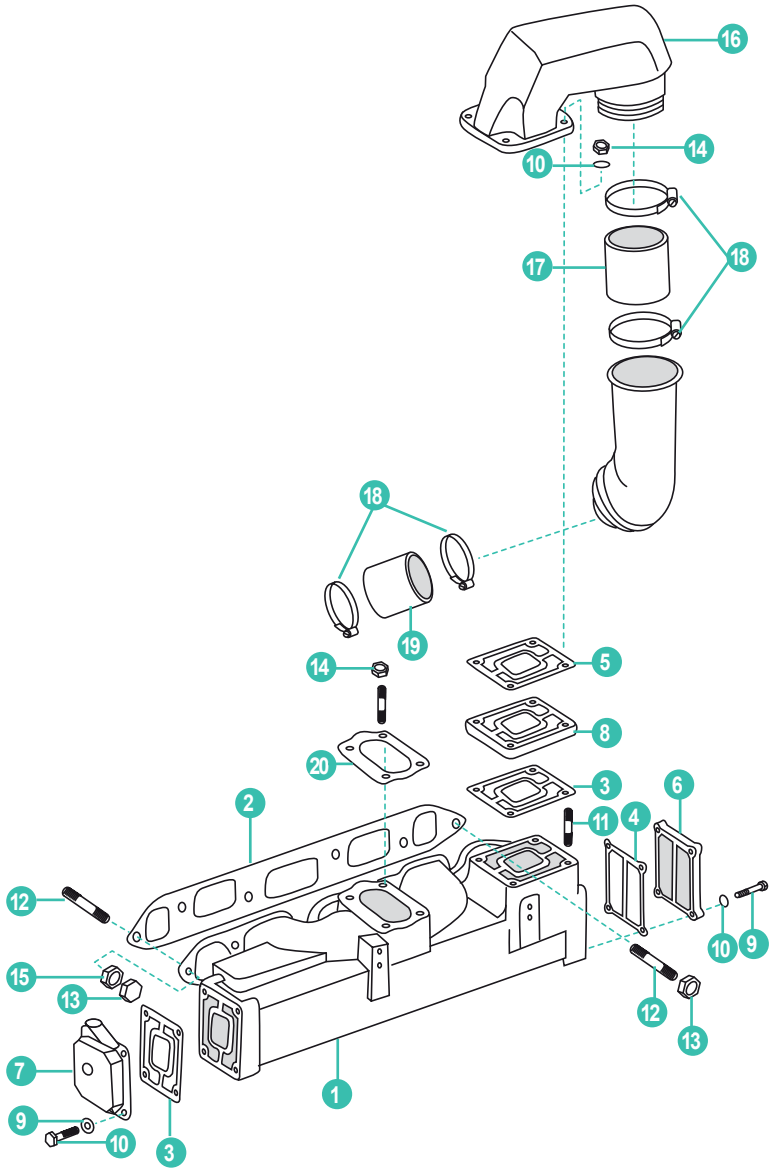

	REF	OEM				
1	BAOMC1-982657	982657	COLECTOR ESCAPE	EXHAUST MANIFOLD ASSEMBLY	COLLETTORE SCARICO	COLLECTEUR D'ÉCHAPPEMENT
2	REC27-52546	311068	JUNTA COLECTOR ESCAPE	GASKET - EXHAUST MANIFOLD	GUARNIZIONE COLLETTORE	JOINT COLLECTEUR
3	REC311121	311121	JUNTA TAPA Y ESPACIADOR	GASKET - END CAP AND SPACER	GUARNIZIONE	JOINT COUVERCLE
4	REC907761	907761	JUNTA TAPA	GASKET - END CAP	GUARNIZIONE	JOINT COUVERCLE
5	REC3850495	3850495	JUNTA CODO ESCAPE	GASKET - EXHAUST ELBOW	GUARNIZIONE SCARICO	JOINT COUDE D'ÉCHAPPEMENT
6	BAOMC1-907885	907885	TAPA TRASERA	END CAP - REAR	COPERCHIO POSTERIORE	COUVERCLE ARRIÈRE
7	BA1-910384	910384	TAPA DELANTERA	END CAP - FRONT	COPERCHIO ANTERIORE	COUVERCLE AVANT
8	BAOMC20-908014	908014	ESPACIADOR	SPACER	DISTANZIALI	ADAPTATEUR POUR COUDE
9	REC317624	552940	TORNILLO	SCREW	VITE	VIS
10	REC13-39107	306470	CIERRE	LOCKWASHER	CHIUSURA	RONDELLE
11	REC910389	910389	PERNO	STUD	PERNO	VIS
12	REC16-56826	120177	PERNO	STUD	PERNO	VIS
13	REC11-862903	552938	TUERCA	NUT	DADO	ÉCROU
14	REC3852142	306422	TUERCA	NUT	DADO	ÉCROU
15	REC13-35048	120177	CIERRE	LOCKWASHER	CHIUSURA	RONDELLE
16	BAOMC20-910380	3850799	CODO ESCAPE	EXHAUST ELBOW ASSEMBLY	GOMITO SCARICO	COUDE D'ÉCHAPPEMENT
17	REC909232	909232	MANGUITO ESCAPE	EXHAUST HOSE	MANICOTO SCARICO	DURITE D'ECHAPPEMENT
18	GS38320	3852604	ABRAZADERA	CLAMP	FASCETTA	COLLIER
19	REC909371	909371	MANGUITO ESCAPE	EXHAUST HOSE	MANICOTO SCARICO	DURITE D'ECHAPPEMENT
20	REC315055	315055	JUNTA CARBURADOR	GASKET - CARBURETOR	GUARNIZIONE CARBURATORE	JOINT CARBURATEUR

140HP, 4 CIL. 181CID / 3.0L GM (1973-90)

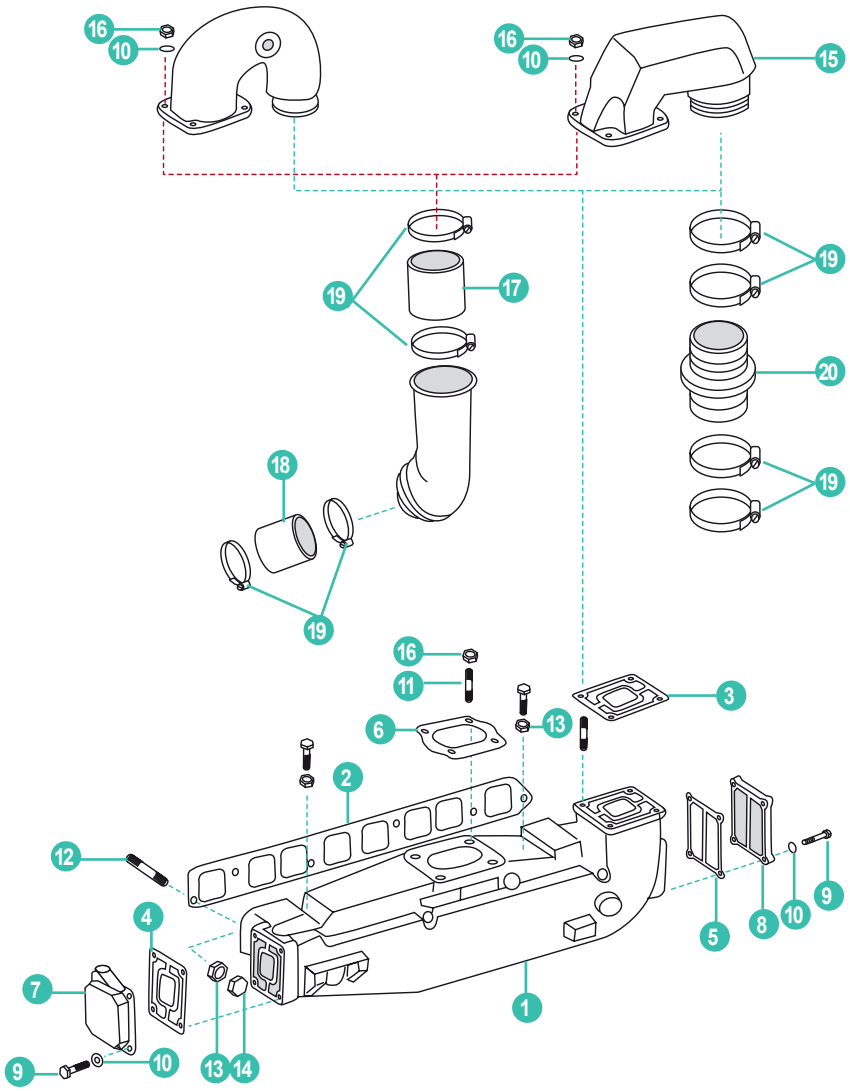

	REF	OEM				
1	BAOMC1-984054	984054	COLECTOR ESCAPE	EXHAUST MANIFOLD ASSEMBLY	COLLETTORE SCARICO	COLLECTEUR D'ÉCHAPPEMENT
2	REC27-53354	908079	JUNTA COLECTOR ESCAPE	GASKET - EXHAUST MANIFOLD	GUARNIZIONE COLLETTORE	JOINT COLLECTEUR
3	REC3850495	3850495	JUNTA CODO	GASKET - EXHAUST ELBOW	GUARNIZIONE GOMITO	JOINT COUDE
4	REC311121	311121	JUNTA TAPA	GASKET - END CAP	GUARNIZIONE COPERCHIO	JOINT COUVERCLE
5	REC907761	907761	JUNTA TAPA	GASKET - END CAP	GUARNIZIONE COPERCHIO	JOINT COUVERCLE
6	REC315055	315055	JUNTA CARBURADOR	GASKET - CARBURETOR	GUARNIZIONE CARBURATORE	JOINT CARBURATEUR
7	BA1-910384	910384	TAPA TRASERA	END CAP - FRONT	GUARNIZIONE POSTERIORE	COUVERCLE ARRIÈRE
8	BAOMC1-907885	907885	TAPA DELANTERA	END CAP - REAR	GUARNIZIONE ANTERIORE	COUVERCLE AVANT
9	REC317624	552940	TORNILLO TAPA	SCREW - END CAP	VIS COPERCHIO	VITE COUVERCLE
10	REC13-39107	306470	CIERRE	LOCKWASHER	CHIUSURA	RONDELLE
11	REC16-70236	314616	PERNO CARBURADOR	STUD - CARBURETOR	PERNO CARBURATORE	VIS CARBURATORE
12	REC16-56826	3852093	PERNO COLECTOR ESCAPE	STUD - EXHAUST MANIFOLD	PERNO COLLETTORE	VIS COLLECTEUR
13	REC13-35048	120177	CIERRE	LOCKWASHER	CHIUSURA	RONDELLE
14	REC11-862903	552938	TUERCA	NUT	DADO	ÉCROU
15	BAOMC20-910380	3850799	CODO ESCAPE	EXHAUST ELBOW ASSEMBLY	GOMITO SCARICO	COUDE D'ÉCHAPPEMENT
16	REC3852142	306422	TUERCA	NUT	DADO	ÉCROU
17	REC909232	909232	MANGUITO ESCAPE	EXHAUST HOSE	MANICOTTO SCARICO	DURITE D'ECHAPPEMENT
18	REC909371	909371	MANGUITO ESCAPE	EXHAUST HOSE	MANICOTO SCARICO	DURITE D'ECHAPPEMENT
19	GS38320	3852604	ABRAZADERA	CLAMP	FASCETA	COLLIER
20	REC3863450	3852741	MANGUITO ESCAPE	EXHAUST HOSE	MANICOTTO SCARICO	DURITE D'ECHAPPEMENT

4.3 / 4.3 H.O. GM 262 CID V6 (1986-90)

Este colector ya no se fabrica.Para substituirlo utilizar todas las piezas del motor modelo: 4.3GM (1991+)
This manifold is obsolete. Parts of the 4.3GM (1991+) must be used to replace it.
Kit di trasformazione: qui sotto troverete i pezzi necessari per sostituire il collettore: 4.3 GM (1991+)
Ce collecteur n'est plus fabriqué. Pour le remplacer, utilisez toutes les pièces du moteur modèle : 4.3GM (1991+)



4.3 GM 262 CID V6 (1991+)



REF	OEM
REC53773	

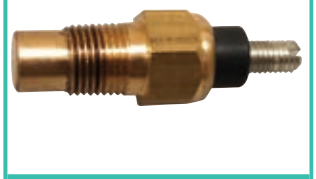

REF	OEM
REC3862500	3862500

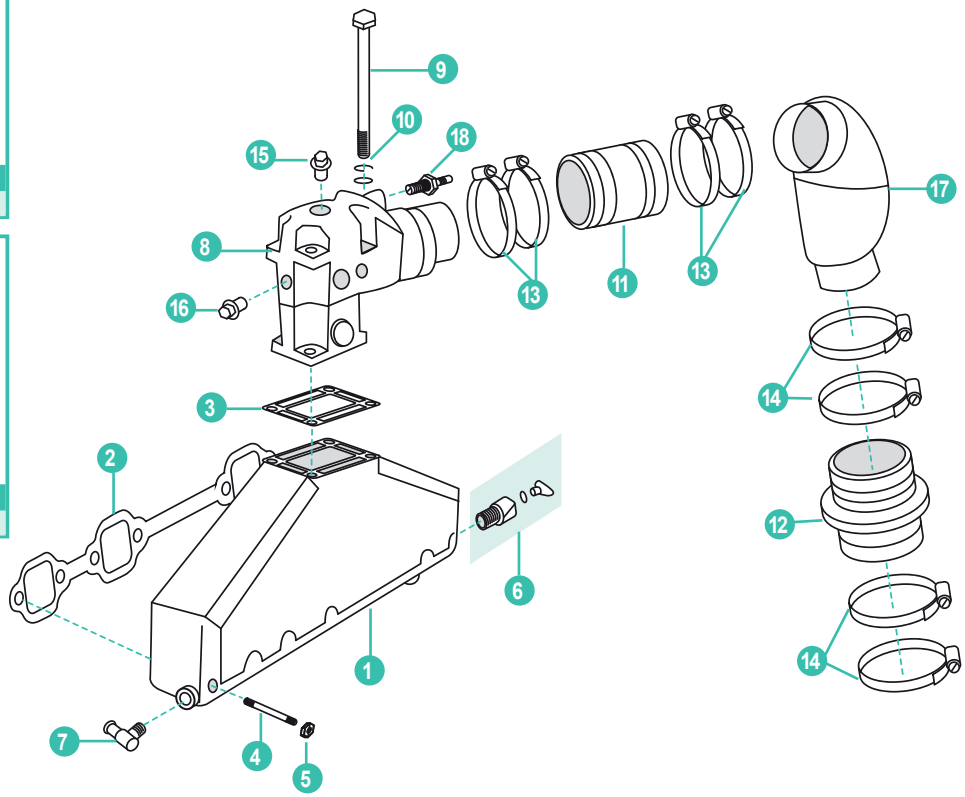

	REF	OEM				
1	MAR499	3847499	COLECTOR ESCAPE	EXHAUST MANIFOLD ASSEMBLY	COLLETTORE SCARICO	COLLECTEUR D'ÉCHAPPEMENT
2	REC27-99757	3853412	JUNTA COLECTOR ESCAPE	GASKET - EXHAUST MANIFOLD	COLLETTORE SCARICO	COLLECTEUR D'ÉCHAPPEMENT
3	REC3863191	351325	JUNTA CODO ESCAPE	GASKET - EXHAUST ELBOW	KIT GUARNIZIONE COLLETTORE SCARICO	KIT COUDE
4	REC3852467	3852467	PERNO	STUD	PERNO	VIS
5	REC46335	3853404	TUERCA	NUT	DADO	ÉCROU
6	REC479956		RACOR COLECTOR	STRAIGHT FITTING	RACCORDO	RACCORD
7	REC3852538	3852538	TORNILLO CODO	ELBOW FITTING	VITE GOMITO	VIS COUDE
8	MAR061	3857944	CODO ESCAPE	EXHAUST ELBOW ASSEMBLY	GOMITO SCARICO	VIS D'ÉCHAPPEMENT
9	REC3852830	3852830	TORNILLO	SCREW	VITE	VIS
10	REC13-35048	120177	CIERRE	LOCKWASHER	CHIUSURA	RONDELLE
11	REC3852696	3852696	MANGUITO ESCAPE	EXHAUST HOSE	MANICOTTO SCARICO	DURITE D'ÉCHAPPEMENT
12	REC3863450	3852741	MANGUITO ESCAPE	EXHAUST HOSE	MANICOTTO SCARICO	DURITE D'ÉCHAPPEMENT
13	GS38322	3853860	ABRAZADERA	CLAMP	FASCETTA	COLLIER
14	GS38320	3852604	ABRAZADERA	CLAMP	FASCETTA	COLLIER
15	REC22-73379		TAPÓN	PLUG	TAPPO	BOUCHON
16	REC22-428611	315713	TAPÓN	PLUG	TAPPO	BOUCHON
17	RM3854874	3854874	CURVA (1991-98) COLA SX	ELBOW SYSTEM DRIVE SX (1991-98)	CURVA (1991-98) PIEDE SX	COUDE SX (1991-98)
18	REC3862500	3862500	SENSOR TEMPERATURA	TEMPERATURE SENSOR	SENSORE TEMPERATURA	CAPTEUR TEMPÉRATURE

800 GM 305/350 CID V8
BLOQUE PEQUEÑO | SMALL BLOCK | BLOCCO PICCOLO | BLOQUE PETIT (1979-89)



REF	OEM
REC18-8553	

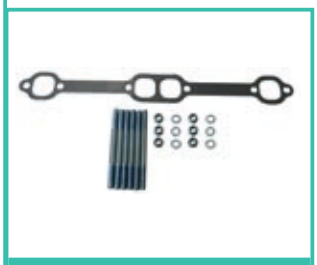

REF	OEM
HOT20244-MK	

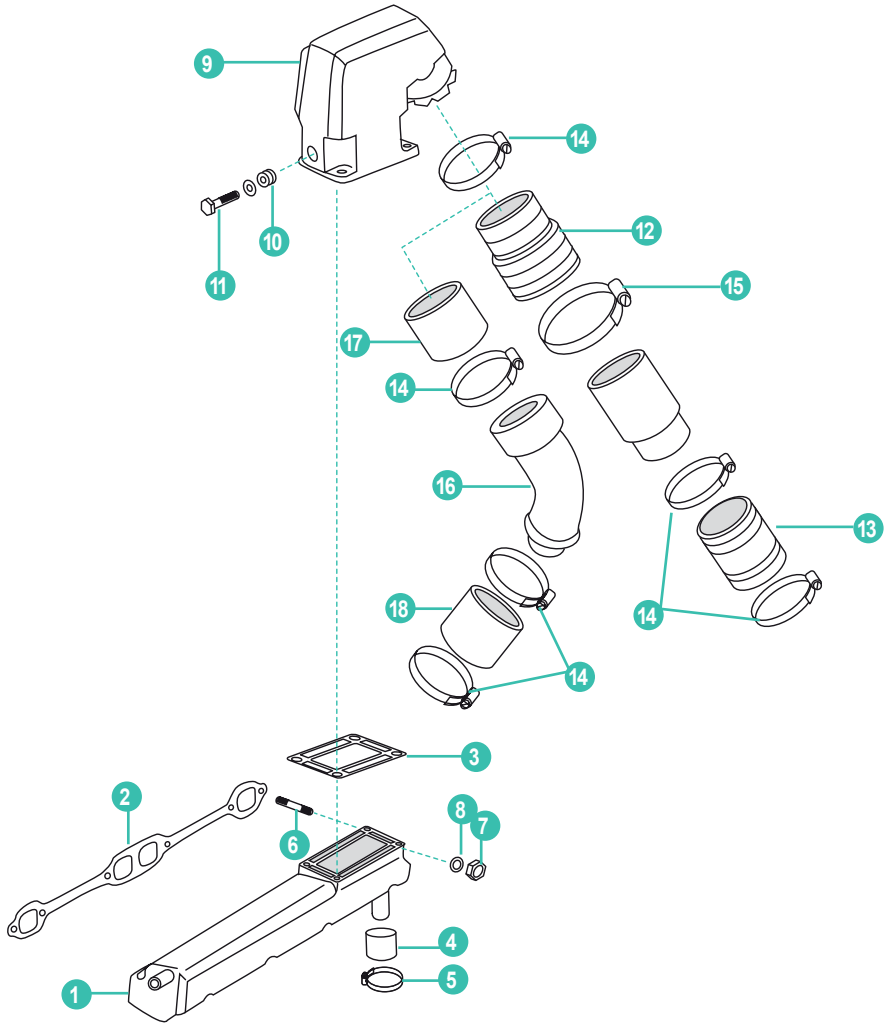

	REF	OEM				
1	HOT20903	912442	COLECTOR ESCAPE BABOR	EXHAUST MANIFOLD ASSEMBLY - PORT	COLLETTORE SCARICO BABORDO	COLLECTEUR D'ÉCHAPPEMENT BABORD
2	REC27-33395	3852468	JUNTA COLECTOR ESCAPE	GASKET - EXHAUST MANIFOLD	GUARNIZIONE COLLETTORE SCARICO	JOINT COLLECTEUR D'ÉCHAPPEMENT
3	REC3863191	3863191	JUNTA CODO ESCAPE	GASKET - EXHAUST ELBOW	GUARNIZIONE GOMITO SCARCIO	JOINT COUDE D'ÉCHAPPEMENT
4	REC764799	764799	TAPA	CAP	COPERCHIO	COUVERCLE
5	REC54-815504320	3853786	ABRAZADERA	CLAMP	FASCETTA	COLLIER
6	REC3852467	3852467	PERNO	STUD	PERNO	VIS
7	REC46335	908700	TUERCA	NUT	DADO	ÉCROU
8	REC13-35048	309336	CIERRE	LOCKWASHER	CHIUSURA	RONDELLE
9	HOT20921	909863	CODO ESCAPE	EXHAUST ELBOW ASSEMBLY	GOMITO SCARICO	COUDE D'ÉCHAPPEMENT
10	REC22-428611	315713	TAPÓN	PLUG	TAPPO	BOUCHON
11	REC13-39107	306325	CIERRE	LOCKWASHER	CHIUSURA	RONDELLE
12	REC912374	912374	MANGUITO ESCAPE (COBRA)	EXHAUST HOSE (COBRA)	MANCIOTTO SCARICO (COBRA)	DURITE D'ÉCHAPPEMENT (COBRA)
13	REC3852742	3852742	MANGUITO ESCAPE (COBRA)	EXHAUST HOSE (COBRA)	MANCIOTTO SCARICO (COBRA)	DURITE D'ÉCHAPPEMENT (COBRA)
14	GS38320	3852604	ABRAZADERA	CLAMP	FASCETTA	COLLIER
15	GS38322	984387	ABRAZADERA	CLAMP	FASCETTA	COLLIER
16	REC909610	909610	TUBO CODO BABOR	ELBOW TUBE - PORT (STRINGER MOUNT)	TUBO GOMITO BABORDO	DURITE COUDE BABORD
17	REC909232	909232	MANGUITO ESCAPE	EXHAUST HOSE	MANICOTTO SCARICO	DURITE D'ÉCHAPPEMENT
18	REC909371	909371	MANGUITO ESCAPE	EXHAUST HOSE	MANICOTTO SCARICO	DURITE D'ÉCHAPPEMENT

5.7L GM 350 CID V8 (1990+)



REF	OEM
REC3862500	3862500



REF	OEM
HOT20244-MK	

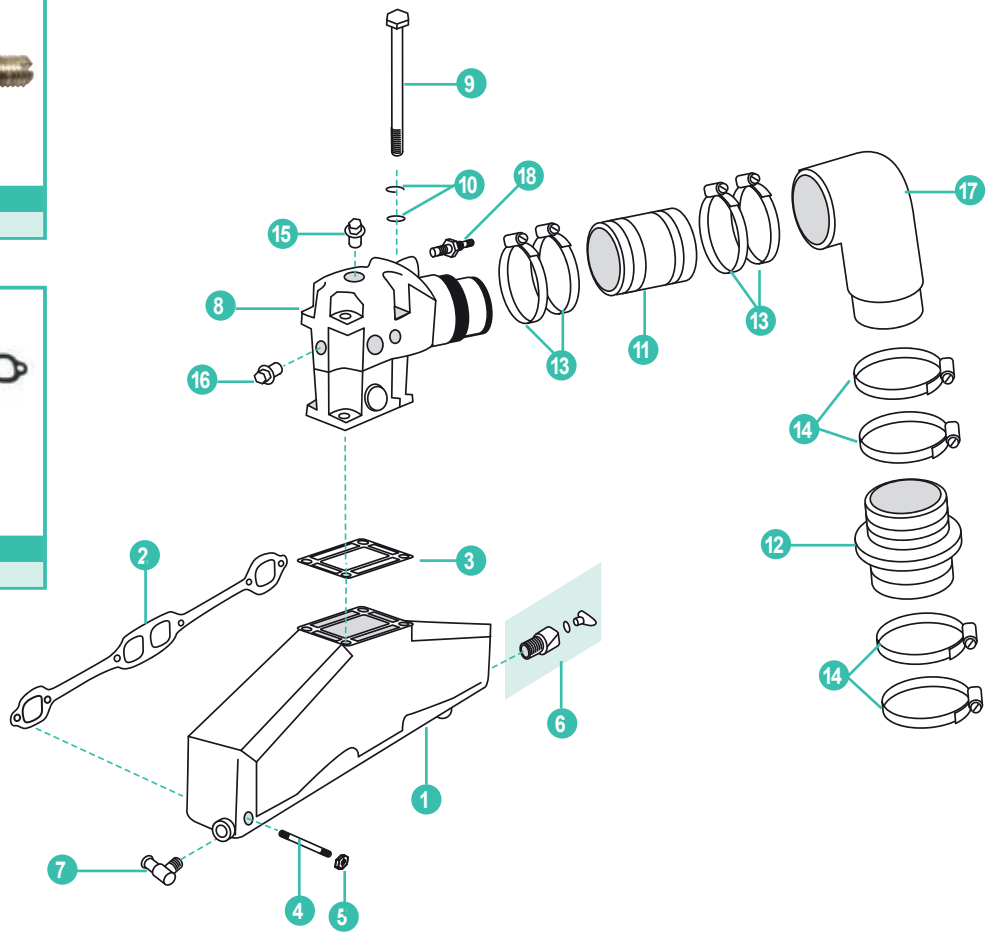

	REF	OEM				
1	MAR501	3857723	COLECTOR ESCAPE	EXHAUST MANIFOLD ASSEMBLY	COLLETTORE SCARICO	COLLECTEUR D'ÉCHAPPEMENT
2	REC27-33395	3852468	JUNTA COLECTOR ESCAPE	GASKET - EXHAUST MANIFOLD	GUARNIZIONE COLLETTORE SCARICO	JOINT COLLECTEUR D'ÉCHAPPEMENT
3	REC3863191	3863191	JUNTA CODO ESCAPE	GASKET - EXHAUST ELBOW	GUARNIZIONE GOMITO SCARICO	JOINT COUDE D'ÉCHAPPEMENT
4	REC3852467	3852467	PERNO	STUD	PERNO	VIS
5	REC46335	3853404	CIERRE	LOCKNUT	CHIUSURA	RONDELLE
6	REC479956		RACOR COLECTOR	STRAIGHT FITTING KIT	RACCORDO COLLETTORE	RACCORD COLLECTEUR
7	REC3852538	3852538	RACOR CODO	ELBOW FITTING	RACCORDO GOMITO	RACCORD COUDE
8	MAR061	3857944	CODO ESCAPE	EXHAUST ELBOW	GOMITO SCARICO	COUDE D'ÉCHAPPEMENT
9	REC3852830	3852830	TORNILLO	SCREW	VITE	VIS
10	REC13-35048	120177 306405	CIERRE	LOCKWASHER	CHIUSURA	RONDELLE
11	REC3852696	3852696	MANGUITO ESCAPE	EXHAUST HOSE	MANICOTTO SCARICO	DURITE D'ÉCHAPPEMENT
12	REC3863450	3852741	MANGUITO ESCAPE	EXHAUST HOSE	MANICOTTO SCARICO	DURITE D'ÉCHAPPEMENT
13	GS38322	3853860	ABRAZADERA	CLAMP	FASCETTA	COLLIER
14	GS38320	3852604	ABRAZADERA	CLAMP	FASCETTA	COLLIER
15	REC22-73379		TAPÓN	PLUG	TAPPO	BOUCHON
16	REC22-428611	315713	TAPÓN	PLUG	TAPPO	BOUCHON
17	REC763891	763891	TUBO ESCAPE	EXHAUST TUBE	TUBO SCARICO	DURITE D'ÉCHAPPEMENT
18	REC3862500	3862500	SENSOR TEMPERATURA	TEMPERATURE SENSOR	SENSORE TEMPERTURA	CAPTEUR TEMPÉRATURE

5.0/5.8L & EFI FORD 302/351 CID V8 (1991+)

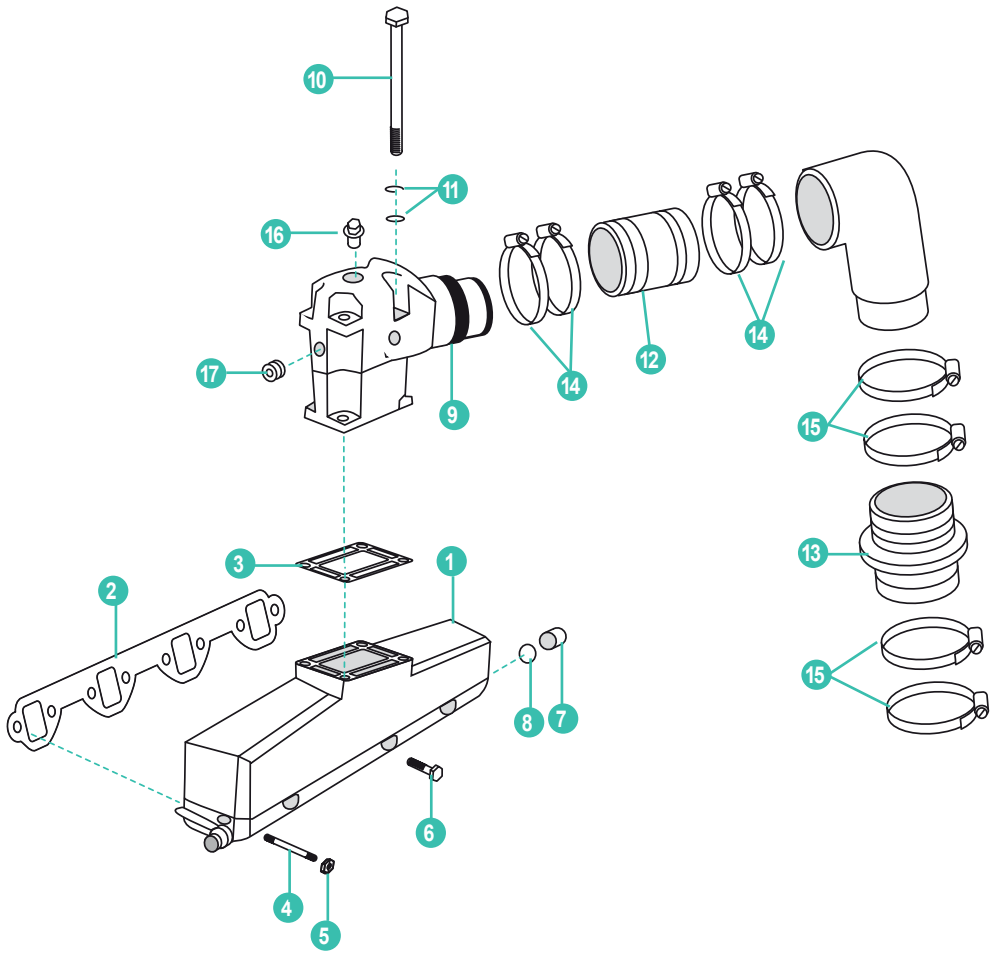

	REF	OEM				
1	BAOMC1-3852347	3852347	COLECTOR ESCAPE	EXHAUST MANIFOLD ASSEMBLY	COLLETTORE SCARICO	COLLECTEUR D'ÉCHAPPEMENT
2	REC3852455	3852455	JUNTA COLECTOR ESCAPE	GASKET - EXHAUST MANIFOLD	GUARNIZIONE COLLETTORE SCARICO	JOINT COLLECTEUR D'ÉCHAPPEMENT
3	REC3863191	3863191	JUNTA CODO ESCAPE	GASKET - EXHAUST ELBOW	GUARNIZIONE GOMITO SCARICO	JOINT COUDE D'ÉCHAPPEMENT
4	REC3853434	3853434	PERNO	STUD	PERNO	VIS
5	REC46335	3853404	TUERCA	NUT	DADO	ÉCROU
6	REC10-37612	3853155	TORNILLO	SCREW	VITE	VIS
7	REC3852476	3852476	TAPA	CAP	COPERCHIO	COUVERCLE
8	REC3852602	912627	ARANDELA	CLAMP	FASCETTA	COLLIER
9	MAR061	3857944	CODO ESCAPE (1988-96) CARB.	EXHAUST ELBOW ASSEMBLY (1988-96 CARB.)	GOMITO SCARICO CARBURATORE (1988-96)	COUDE D'ÉCHAPPEMENT (1988-96) CARB.
9	REC3855271	3855271	CODO ESCAPE BABOR (1993-96) EFI	EXHAUST ELBOW ASSLY - PORT (1993-96 EFI)	GOMITO SCARICO EFI BABORDO (1993-96)	COUDE D'ÉCHAPPEMENT (1993-96) BABORD - EFI
9	REC3855269	3855269	CODO ESCAPE ESTRIBOR (1993-96) EFI	EXHAUST ELBOW ASBLY - STBD (1993-96 EFI)	GOMITO SCARICO EFI TRIBORDO (1993-96)	COUDE D'ÉCHAPPEMENT (1993-96) TRIBORD - EFI
10	REC3852830	3852830	TORNILLO	SCREW	VITE	VIS
11	REC13-35048	120177 306405	CIERRE	LOCKWASHER	CHIUSURA	RONDELLE
12	REC3852696	3852696	MANGUITO ESCAPE	EXHAUST HOSE	MANICOTTO SCARICO	DURITE D'ÉCHAPPEMENT
13	REC3863450	3852741	MANGUITO ESCAPE	EXHAUST HOSE	MANICOTTO SCARICO	DURITE D'ÉCHAPPEMENT
14	GS38322	3853860	ABRAZADERA	CLAMP	FASCETTA	COLLIER
15	GS38320	3852604	ABRAZADERA	CLAMP	FASCETTA	COLLIER
16	REC22-73379		TAPÓN	PLUG	TAPPO	BOUCHON
17	REC22-428611	315713	TAPÓN	PLUG	TAPPO	BOUCHON

7.4/8.2L GM 454/502 CID V8 (1991+)

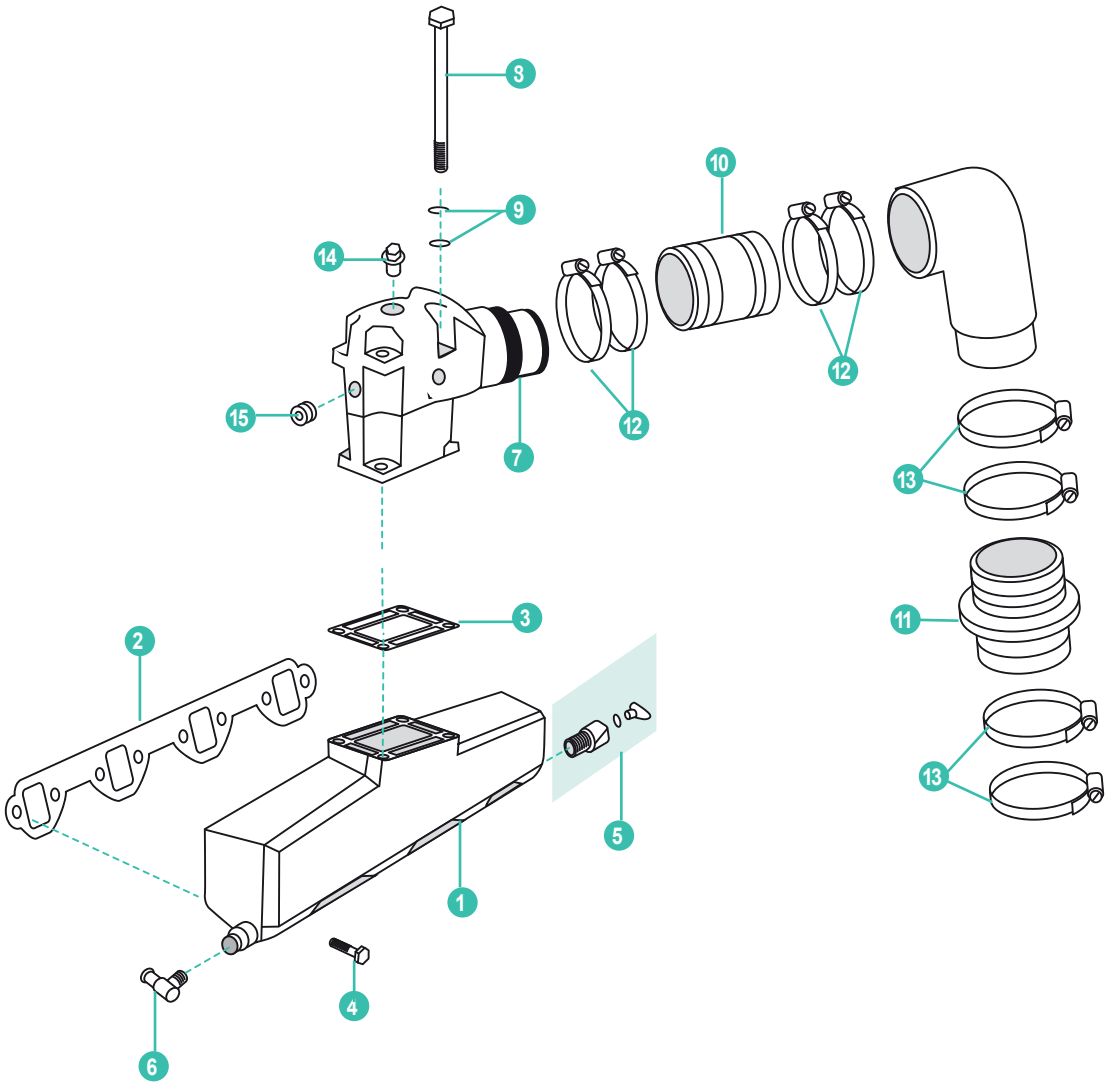

	REF	OEM				
1	RM3861459	3861459	COLECTOR ESCAPE	EXHAUST MANIFOLD ASSEMBLY	COLLETTORE SCARICO	COLLECTEUR D'ÉCHAPPEMENT
2	REC27-46820	3852472	JUNTA COLECTOR ESCAPE	GASKET - EXHAUST MANIFOLD	GUARNIZIONE COLLETTORE SCARICO	JOINT COLLECTEUR D'ÉCHAPPEMENT
3	REC3863191	3863191	JUNTA CODO ESCAPE	GASKET - EXHAUST ELBOW	GUARNIZIONE GOMITO SCARICO	JOINT COUDE D'ÉCHAPPEMENT
4	REC10-37612	3853326	TORNILLO	SCREW 3/8 - 16 X 1 1/4 FLANGE	PERNO	VIS
5	REC479956		RACOR COLECTOR	STRAIGHT FITTING	RACCORDO COLLETTORE	RACCORD COLLECTEUR
6	REC3852538	3852538	RACOR CODO	ELBOW FITTING	RACCORDO GOMITO	RACCORD COUDE
7	MAR061	3857944	CODO ESCAPE	EXHAUST ELBOW ASSEMBLY	GOMITO SCARICO	COUDE D'ÉCHAPPEMENT
8	REC3852830	3852830	TORNILLO	SCREW	VITE	VIS
9	REC13-35048	120177 306405	CIERRE	LOCKWASHER	CHIUSURA	RONDELLE
10	REC3852696	3852696	MANGUITO ESCAPE	EXHAUST HOSE	MANICOTTO SCARICO	DURITE D'ÉCHAPPEMENT
11	REC3863450	3852741	MANGUITO ESCAPE	EXHAUST HOSE	MANICOTTO SCARICO	DURITE D'ÉCHAPPEMENT
12	GS38322	3853860	ABRAZADERA	CLAMP	FASCETTA	COLLIER
13	GS38320	3852604	ABRAZADERA	CLAMP	FASCETTA	COLLIER
14	REC22-73379		TAPÓN	PLUG	TAPPO	BOUCHON
15	REC22-428611	315713	TAPÓN	PLUG	TAPPO	BOUCHON

COLECTOR DE ESCAPE | EXHAUST MANIFOLD | COLLETTORE SCARICO | COLLECTEUR D'ÉCHAPPEMENT

REF	OEM	
HGE6041	986041	2.3 FORD 4 en línea | 4 inline | 4 en rete | en ligne



REF	OEM	
BAOMC-1-980959	980959	170, 175, 190, 235 HP V8 CID302 & 351 FORD



CODOS DE ESCAPE | EXHAUST ELBOWS | GOMITI SCARICO | COUDES D'ÉCHAPPEMENT

REF	OEM	
HGE3394	914766	2.3 FORD 4 en línea | 4 inline | 4 en rete | en ligne



REF	OEM	
BAOMC20-981281	981281	155HP, V6 GM



REF	OEM	
HOT20921	909863	240HP, 302 & 351 CID FORD



REF	OEM	
BAOMC20-980617	980617	170, 175, 190, 235 HP V8 CID302 & 351 FORD



JUNTAS COLECTOR DE ESCAPE | EXHAUST MANIFOLD GASKET | GUARNIZIONE COLLETTORE DI SCARICO | JOINTS COLLECTEUR D'ÉCHAPPEMENT

REF	OEM	
REC913393	913393	2.3 FORD 4 en línea | 4 inline | 4 en rete | en ligne



REF	OEM		
FEL17460	913393	KIT x 2	240HP 302 & 351 CID FORD
REC3852455	3852455		170, 175, 190, 235 HP V8



JUNTAS CODOS | ELBOW GASKET | GUARNIZIONE GOMITO | JOINTS COUDES

REF	OEM	
REC878982	912477	2.3 FORD 4 en línea | 4 inline | 4 en rete | en ligne



REF	OEM	
REC3863191	913784	240HP, 302 & 351 CID FORD

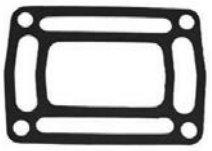

JUNTAS TAPA | COVER GASKET | GUARNIZIONE COPERCHIO | JOINT COUVERCLE

REF	OEM	
BAOMC47-908935	908935	170, 175, 190, 235 HP V8 CID302 & 351 FORD



REF	OEM	
BAOMC47-311130	311130	155HP V6 GM



TAPÓN DE GOMA | RUBBER CAP | TAPPO IN GOMMA | BOUCHON EN CAOUTCHOUC

REF	OEM	
REC764799	764799	
REC3852476	909829 3852476	240HP, 302 & 351 CID FORD



TAPA | COVER | COPERCHIO | COUVERCLE

REF	OEM	
BA1-908719	908716	170, 175, 190, 235 HP V8 CID302 & 351 FORD



REF	OEM	
BA1-312148	312148	155HP V6 GM



BOMBA DE CIRCULACIÓN BLOQUE | BLOCK CIRCULATING PUMP | POMPA DI RICIRCOLO DI BLOCCO | POMPE DE BRASSAGE

BOMBAS | PUMPS | POMPE | POMPES

REF	OEM	
REC46-8M0113733	3858340	GM 4L



REF	OEM	
REC46-8M0113735	3855991	GM V8 (bloque grande | big block | blocco grande | bloque grande)



REF	OEM	
REC46-8M0113734	3853850 985429	GM V6 & V8 (bloque pequeño | small block | blocco piccolo | bloque petit)



REF	OEM	
REC3853796	982517 3471293	Ford 5.0L & 5.8L



MANGUITO | HOSE | MANICOTTO | DURITE

REF	OEM	
REC32-33189	312781	COBRA



REF	OEM	
REC32-8M0071007	0509282	



UNIDADES DE TRANSMISIÓN
TRANSMISSION UNIT

UNITÀ DI TRASMISSIONE
EMBASES ET PIÈCES

RECMAR

ÁNODO ANODE ANODI ANODE

	REF	OEM	(kg)	
ZN	REC987067	3854061	0,98	COBRA 5700
AL	REC987067AL			



	REF	OEM	(kg)	
ZN	REC986158	3853930	0,61	TRANSOM COBRA (1986-93)
AL	REC986158AL			



	REF	OEM	(kg)	
ZN	REC3851411	3855411	1,04	COBRA (1994-98)
AL	REC3863193AL		0,41	



	REF	OEM	(kg)
ZN	REC397768	397768	0,31
AL	REC397768AL		0,12



	REF	OEM	(kg)	
ZN	REC983952	984547	0,91	COBRA
AL	REC983952AL	983952	0,35	



	REF	OEM	(kg)	
ZN	REC983494	983494	0,82	400-800 (1978-85)
AL	REC983494AL		0,32	



	REF	OEM	(kg)
ZN	REC982438	982438	0,83
AL	REC982438AL		

100-245 HP



	REF	OEM	(kg)	
ZN	REC976669	976669	0,43	
AL	REC976669AL		0,17	



	REF	OEM	(kg)	
ZN	REC431708	431708	0,27	400-800 (1978-85)
AL	REC431708AL		0,24	COBRA (1986-93)



	REF	OEM	(kg)	
ZN	REC436745	436745	0,22	400-800 (1978-85)
AL	REC436745AL		0,09	COBRA (1986-93)



ÁNODO — ANODE — ANODI — ANODE

REF	OEM	(kg)	
ZN CM984513	3853818	0,97	COBRA (1986-93)
AL CM984513A		0,38	



KITS DE ÁNODOS — ANODES KIT — KIT ANODI — KIT ANODES

KIT	ÁNODO ZN / ZN ANODE / ANODO ZN / ANODE ZN	OEM	(kg)	
CMCC			0,93	COBRA
	CMC		0,45	



UNIDADES DE TRANSMISIÓN — UNIT DRIVES — UNITÀ DI TRASMISSIONE — EMBASES

KIT CONVERSIÓN OMC-COBRA — CONVERSION KIT OMC-COBRA — KIT CONVERSIONE OMC - COBRA — KIT CONVERSION OMC - COBRA

Kit para adaptar las colas Mercruiser a las antiguas unidades OMC-Cobra hasta 300 HP, con el cambio en la unidad inferior. Fácil instalación.

This kit will work on Cobra drives up to 300 HP.
Easy to replace the aging Cobra drives with a current style drive that has readily available spare parts.

Kit per adattare i piedi Mercruiser alle vecchie unità OMC-Cobra fino a 300 HP, con il cambio nella unità inferiore. Facile installazione.

Kit pour adapter les embases Mercruiser aux anciennes unités OMC-Cobra jusqu'à 300 CV, avec changement de l'unité inférieure. Installation facile.

REF
REC9D-116

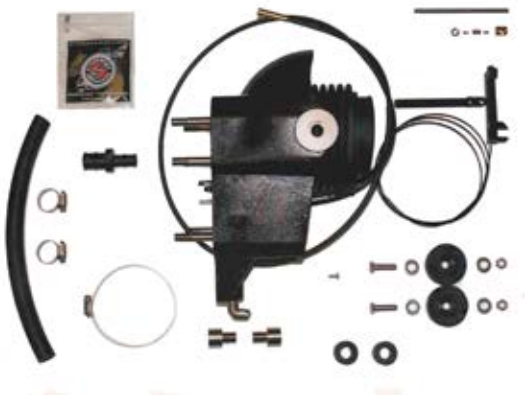

PARTE INFERIOR COMPLETA — COMPLETE GEAR HOUSING ASSEMBLY — PARTE INFERIORE COMPLETA — PARTIE INFÉRIEURE COMPLETE

REF	OEM	REDUCCIÓN / RATIO / RIDUZIONE / RÉDUCTION	
REC987800	987800	12:22	3.0, 4.3, 5.0, 5.7 & 5.8L 3.0, 4.3, 5.0, 5.7 & 5.8L

COBRA (1986-93)

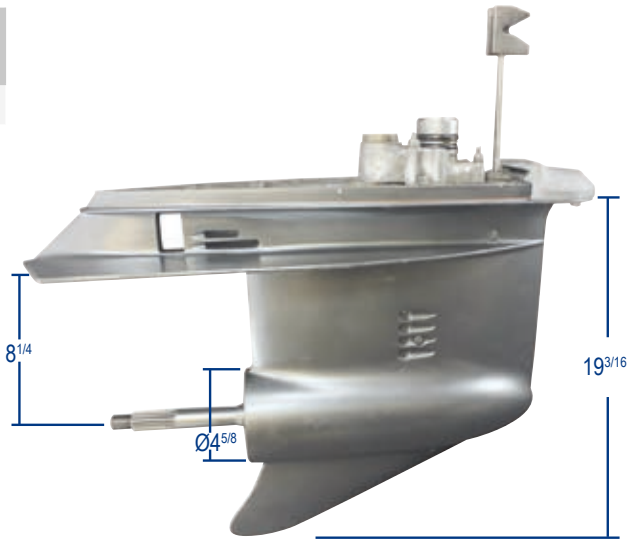

COBRA (1986-93)

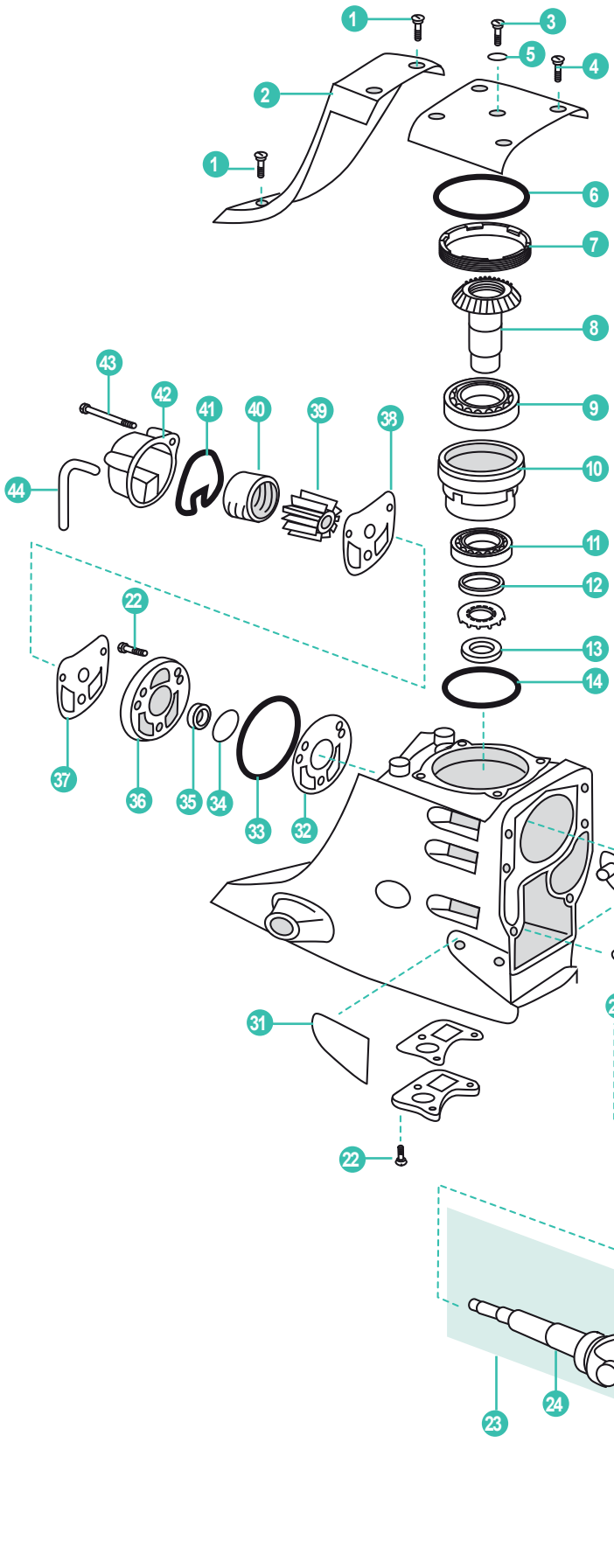



REF
REC3850594



REF
REC984461



REF
REC87654

	REF	OEM				
1	REC3852568	3852568	TORNILLO	SCREW	VITE	VIS
2	REC983967	983967	TAPA	COVER ASSY.	COPERCHIO	COUVERCLE
3	REC914488	914488	TORNILLO NIVEL	DIPSTICK	ASTINA	VIS DE VIDANGE
4	REC123018	123018	TORNILLO	SCREW	VITE	VIS
5	REC3852045	303067	ARO TORICO	O-RING	ANELLO	JOINT TORIQUE
6	REC313175	313175	ARO TÓRICO	O-RING	ANELLO	JOINT TORIQUE
7	REC911751	911751	ARANDELA CIERRE	LOCK WASHER	RONDELLA CHIUSURA	RONDELLE FREIN
8	REC983825	983825	KIT PIÑONES (21:16) V8	GEAR SET (21:16) V8	KIT PIGNONE (21:16) V8	KIT PIGNONS (21:16) V8
	REC984012	984012	KIT PIÑONES (21:19) V6	GEAR SET (21:19) V6	KIT PIGNONE (21:19) V6	KIT PIGNONS (21:19) V6
	REC983826	983826	KIT PIÑONES (21:18) V8	GEAR SET (21:18) V8	KIT PIGNONE (21:18) V8	KIT PIGNONS (21:18) V8
9	REC31-35990A1	983891	COJINETE	BEARING	CUSCINETTO	ROULEMENT
10	REC911750	911750	CUERPO COJINETE	BEARING CARRIER	CORPO CUSCINETTO	PALIER DE ROULEMENT
11	REC983892	983892	COJINETE	BEARING	CUSCINETTO	ROULEMENT
12	REC911697	911697	ARANDELA	WASHER	RONDELLA	RONDELLE
13	REC911753	911753	TUERCA PIÑÓN	PINION NUT	DADO	ECROU DE PIGNON
14	REC911668	911668	GRUESO	SHIM 0.010	SPESSORE	CALE
15	REC915840	915840	KIT JUNTAS	GASKET SET	KIT GUARNIZIONE	KIT JOINTS
16	REC983878	983878	COJINETE	BEARING	CUSCINETTO	ROULEMENT
17	REC911937	911937	TUERCA PIÑÓN	U-JOINT NUT	DADO	ÉCROU DE PIGNON
18	REC983877	983877	COJINETE	BEARING	CUSCINETTO	ROULEMENT
19	REC25-70937	911686	ARO TÓRICO	O-RING	ANELLO	JOINT TORIQUE
20	REC911678	911678	GRUESO	SHIM 0.003	SPESSORE	CALE
	REC911679	911679	GRUESO	SHIM 0.004	SPESSORE	CALE
	REC911680	911680	GRUESO	SHIM 0.005	SPESSORE	CALE
	REC911681	911681	GRUESO	SHIM 0.010	SPESSORE	CALE
21	REC911685	911685	RETÉN	OIL SEAL	PARAOLIO	JOINT SPI
22	REC3852454	908668	TORNILLO	SCREW	VITE	VIS
23	REC983880	983880	CARDÁN COMPLETO	U-JOINT & WATER PUMP SHAFT	CARDANO COMPLETO	CARDAN AVEC ARBRE
24	REC984264	984264	EJE BOMBA AGUA	YOKE & WATER PUMP SHAFT	ASSE POMPA ACQUA	ARBRE POMPA D'EAU
25	REC3850812	3850812	CRUCETA CARDAN 1990-93	UNIVERSAL JOINT	CROCETTA CARDANO (1990-93)	CROISILLON (1990-93)
	REC75832T	912214	CRUCETA CARDAN 1986-99	UNIVERSAL JOINT	CROCETTA CARDANO (1986-99)	CROISILLON(1986-99)
26	REC393831	912213	CARDAN	SOCKET	CARDANO	CARDAN
27	REC59830A7	912212	UNIÓN COLA MOTOR	YOKE-DRIVE SHAFT	UNIONE MOTORE	CARDAN
28	REC25-25439	3852565	ARO TÓRICO	O-RING	ANELLO	JOINT TORIQUE
29	RM3852516	910953	ARO RETENEDOR	RETAINER RING	ANELLO FERMO	RONDELLE FREIN
30	REC3589522	3852561	TAPA LATERAL	THRUST PLATE	COPERCHIO LATERALE	COUVERCLE LATERALE
31	REC3589524	3852562	TAPA LATERAL	THRUST PLATE	COPERCHIO LATERALE	COUVERCLE LATERALE
32	REC911698	911698	JUNTA	GASKET	GUARNIZIONE	JOINT
33	REC911700	911700	ARO TÓRICO	O-RING	ANELLO	JOINT TORIQUE
34	REC909316	909316	ARO TÓRICO	O-RING	ANELLO	JOINT TORIQUE
35	REC3853655	3853655	RETÉN	OIL SEAL	PARAOLIO	JOINT SPI
36	REC911699	911699	BASE BOMBA AGUA	WATER PUMP ADAPTER	BASE POMPA ACQUA	BASE POMPE
37	REC802385	911702	JUNTA	GASKET	GUARNIZIONE	JOINT
38	REC911703	911703	TAPA BOMBA AGUA	WEAR PLATE	COPERCHIO POMPA ACQUA	COUVERCLE POMPA
39	REC777128 CEF500317	777128	TURBINA	IMPELLER	GIRANTE	TURBINE
40	REC764197	764197	CASQUILLO CUERPO BOMBA	WATER PUMP LINER	BOCCOLA CORPO POMPA	CAGE DE POMPE A EAU
41	REC911704	911704	RETÉN	OIL SEAL	PARAOLIO	JOINT SPI
42	REC984744	984744	TAPA BOMBA AGUA	PUMP HOUSING	COPERCHIO POMPA ACQUA	COUVERLCE POMPA
43	REC912238	912238	TORNILLO	SCREW	VITE	VIS
44	REC912614	912614	TUBO	VENT HOSE	TUBO	DURITE

COBRA (1986-93)

Las colas Cobra con motores 3.0L de (1986-89) utilizan una parte inferior de menos diámetro como los motores 2.3L de (1987-90). Las posteriores utilizan la misma parte inferior que los V6 y V8.

The (1986-89) Cobra Sterndrives with four-cylinder 3.0L engines utilize a small diameter lower gear housing. The (1990-93) four-cylinder 3.0L Cobra Sterndrives use the same large diameter lower gear housing as the 1986-1993 V6 and V8 powered Cobra Sterndrives. (1987-90) 2.3L engines use the small gear housing.

I piedi Cobra con motori 3.0L del (1986-89) utilizzano la parte bassa diferente ed è piú piccola come nei motori 2.3L dal (1987-90), uttilizzano la stessa parte inferiore che i V6 e V8.

Les embases de Cobra équipées de moteurs 3.0L (1986-89) ont un alésage inférieur comme les moteurs 2.3L (1987-90). Les modèles ultérieurs utilisent le même bloc moteur que les V6 et V8.

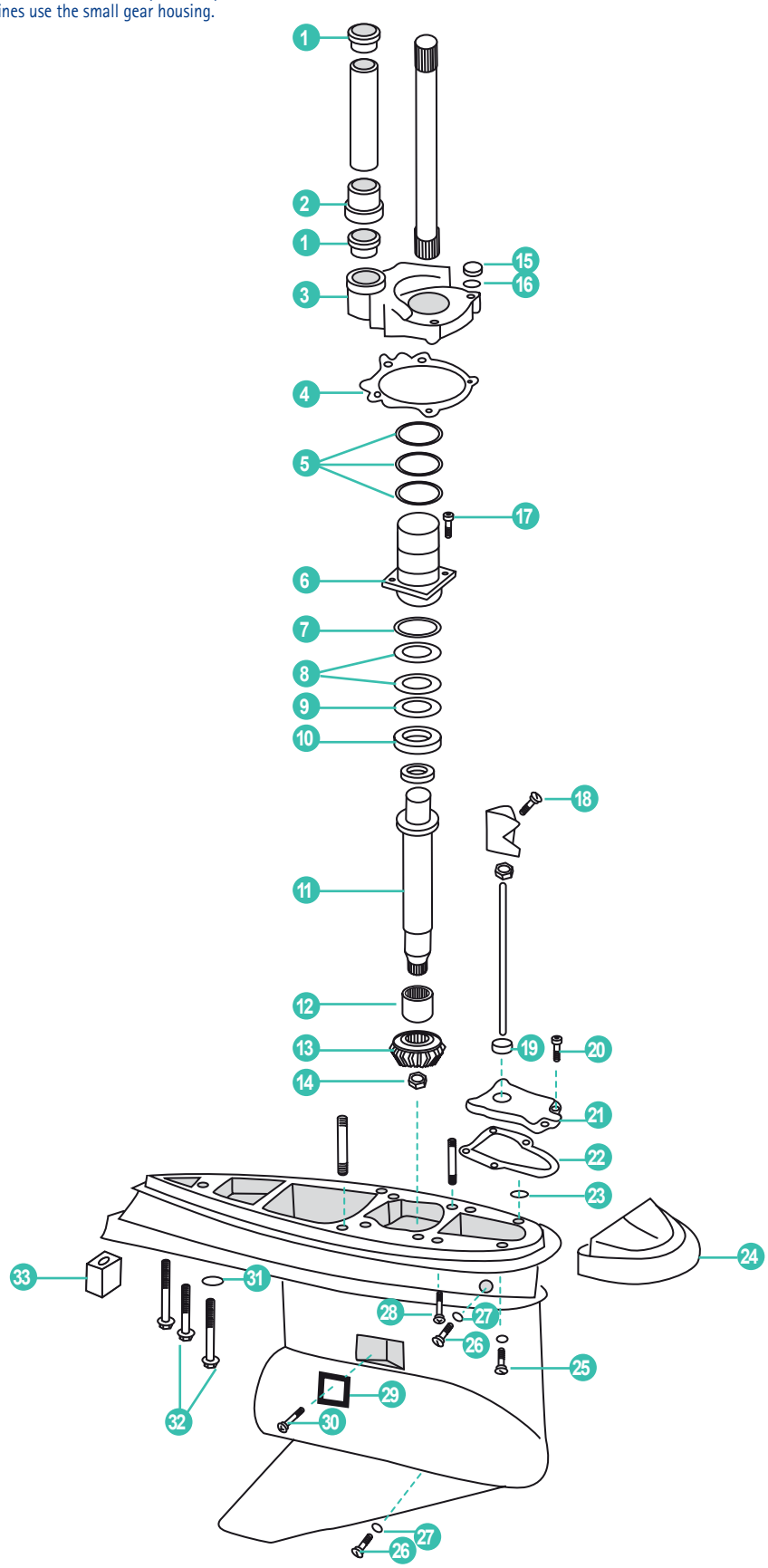

	REF	OEM				
1	REC911705	911705	RETÉN	SEAL	PARAOLIO	JOINT SPI
2	REC911715	911715	GUÍA TUBO	GUIDE	GUIDA TUBO	GUIDE
3	REC915720	915720	TAPA GUÍA TUBO	WASHER	COPERCHIO GUIDA TUBO	COUVERCLE GUIDE
4	REC915719	915719	JUNTA	GASKET	GUARNIZIONE	JOINT
5	REC318717	318717	ARO TÓRICO	O-RING	ANELLO	JOINT SPI
6	REC984462	984462	CUERPO COJINETE	BEARING HNG	CORPO CUSCINETTO	PALIER DE ROULEMENT
7	REC314728	314728	ARO TÓRICO	O-RING	ANELLO	JOINT SPI
8	REC323362	323362	SUPLEMENTO .003	SHIM	SPESSORE	CALE .003
	REC323361	323361	SUPLEMENTO .004	SHIM	SPESSORE	CALE .004
	REC314745	314745	SUPLEMENTO .005	SHIM	SPESSORE	CALE .005
9	REC327656	327656	ARANDELA TOPE	THRUST WASHER	RONDELLA	RONDELLE FREIN
10	REC387656	387656	TOPE COJINETE	THRUST BEARING	FERMO CUSCINETTO	ROULEMENT
11	REC764197	764197	CASQUILLO CUERPO BOMBA	WATER PUMP LINER	BOCCOLA CORPO POMPA	CAGE DE POMPE A EAU
12	REC984744	984744	TAPA BOMBA AGUA	PUMP HOUSING	COPERCHIO POMPA ACQUA	COUVERLCE POMPA
	REC912238	912238	TORNILLO	SCREW	VITE	VIS
13	REC912614	912614	TUBO	VENT HOSE	TUBO	DURITE
	REC986979	986979	KIT PIÑONES 4 L (1986-93)	GEAR SET 4L (1986-93)	KIT PIGNONE 4L (1986-93)	KIT PIGNONES 4L (1986-93)
14	REC11-35921	314730	TUERCA	NUT	DADO	ÉCROU
15	REC11-8267089	121731	TAPÓN	NUT	TAPPO	BOUCHON
16	PAGB/T848-6	305981	ARANDELA	WASHER	RONDELLA	RONDELLE
17	REC317624	317624	TORNILLO	SCREW	VITE	VIS
18	REC308825	308825	TORNILLO	SCREW	VITE	VIS
19	REC912157	912157	CASQUILLO	WIPER	BOCCOLA	BAGUE
20	REC304027	304027	TORNILLO	SCREW	VITE	VIS
21	REC986838	986838	TAPA CON RETÉN	COVER & SEAL	TAPPO CON PARAOLIO	COUVERCLE AVEC JOINT
22	REC911878	911878	JUNTA	GASKET	GUARNIZIONE	JOINT
23	REC318372	318372	ARO TÓRICO	O-RING	ANELLO	JOINT TORIQUE
24	CM984513	3853818	ANODO	ANODE	ANODO	ANODE
25	REC912127	912127	TORNILLO	SCREW	VITE	VIS
26	REC22-67892A05	318544	TORNILLO	SCREW	VIRE	VIS
27	REC3855081	311598	ARO TÓRICO	O-RING	ANELLO	JOINT OTRIQUE
28	REC331999	331999	TORNILLO	SCREW	VITE	VIS
29	REC337778	337778	REJILLA	SCREEN	GRIGLIA	GRILLE
30	REC337061	337061	TORNILLO	SCREW	VITE	VIS
31	REC330265	330265	ARANDELA	O-RING	RONDELLA	RONDELLE
32	REC328096	328096	TORNILLO	SCREW	VITE	VIS
33	CM393023	436745	ANODO	ANODE	ANODO	ANODE

COBRA (1986-93)

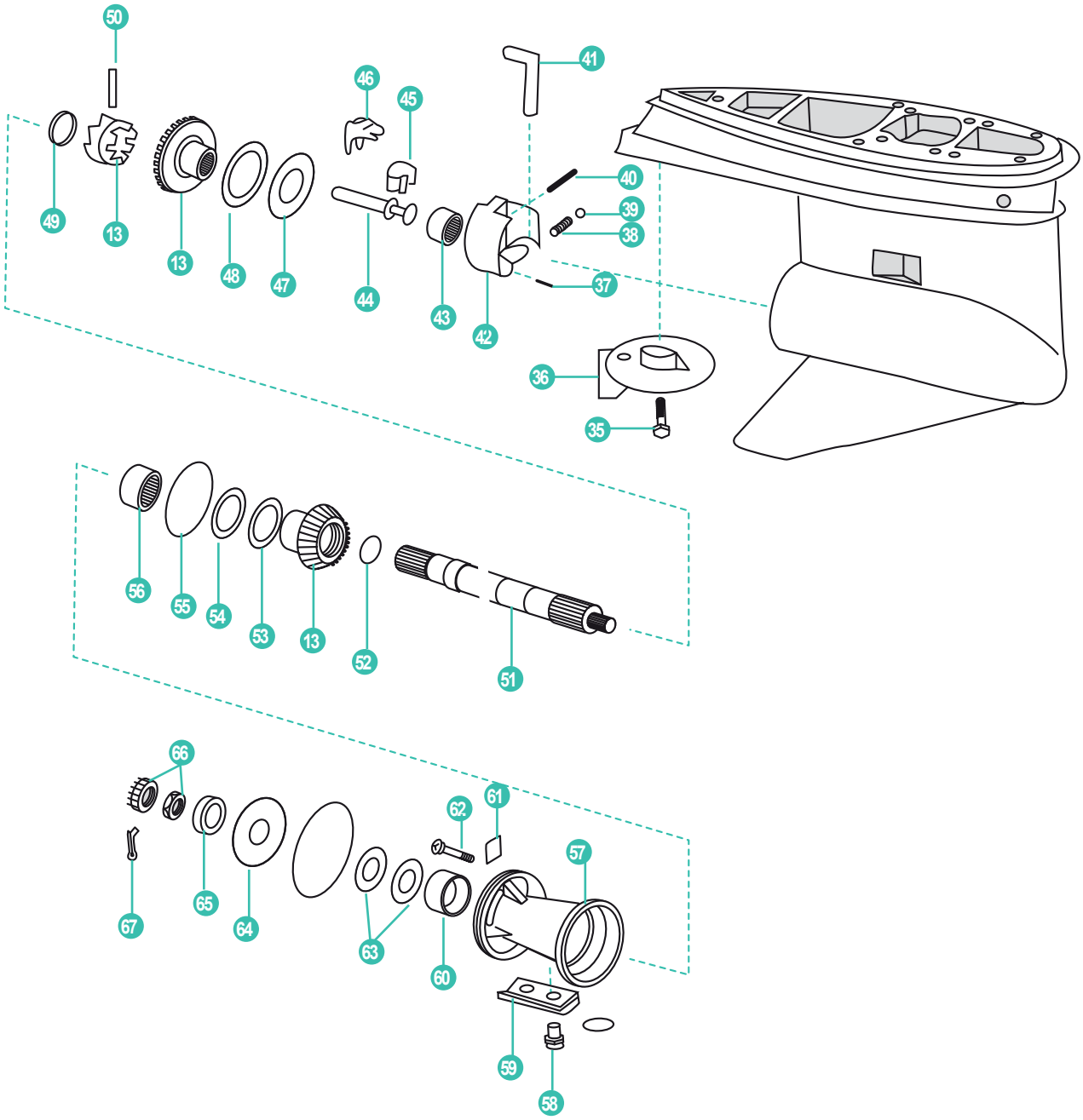



REF

REF		
REC439967	439967 984458	3.0L (1990-93), V6 / V8 (1986-93) ⃠ KING COBRA



REF

REF		
REC985612	985612	4 Cyl (1986-89), 2.3 L (1987-90)

	REF	OEM				
13	REC5004218	986980	KIT PIÑONES V6-V8 (1986-93)	GEAR SET V6-V8 (1986-93)	KIT PIGNONE V6-V8 (1986-93)	KIT PIGNONES V6-V8 (1986-93)
	REC986979	986979	KIT PIÑONES 4 L (1986-93)	GEAR SET 4L (1986-93)	KIT PIGNONE 4L (1986-93)	KIT PIGNONES 4L (1986-93)
35	REC313715	313715	TORNILLO	SCREW	VITE	VIS
36	TEN00712	912392	ALETA	TRIM TAB	TRIM TAB	ANODE
37	REC331880	331880	PASADOR	PIN	CHIAVISTELLO	GOUPILLE
38	REC911962	385367	MUELLE	SPRING	MOLLA	RESSORT
39	REC160084	160084	BOLA	DETENT BALL	BOLLA	BOULE
40	REC328825	328825	PASADOR	PIN	SPINOTTO	GOUPILLE
41	REC915954	915954	EJE VARILLA CAMBIO	DETENT	ASTICELLA CAMBIO	ARBRE DE CHANGEMENT DE VITESSE
42	REC389455	389455	TAPA COJINETE	HOUSING & BEARING ASSY.	COPERCHIO CUSCINETTO	LOGEMENT DE ROULEMENT
43	REC389039	389039	COJINETE	BEARING	CUSCINETTO	ROULEMENT
	REC382407	382407	COJINETE GM 4L	BEARING	CUSCINETTO GM 4L	ROULEMENT GM 4L
44	REC322941	322941	EJE DESPLAZABLE	SHAFT	ASSE SELETTORE	ARBRE
45	REC334163	334163	REGULADOR EJE	CRADLE	REGOLATORE ASSE	REGULATEUR D'ARBRE
46	REC322938	322938	UÑA DESPLAZABLE	LEVER	LEVA	CROCHET
47	REC327669	327669	TOPE ARANDELA	THRUST WASHER	RONDELLA	RONDELLE FREIN
	REC324766	324766	TOPE ARANDELA GM 4L	THRUST WASHER	RONDELLA GM 4L	RONDELLE FREIN GM 4L
48	REC389042	389042	TOPE COJINETE	THRUST BRING	RONDELLA	FREIN ROULEMENT
	REC385043	385043	TOPE COJINETE GM 4L	GM 4L T B	RONDELLA GM 4L	FREIN ROULEMENTGM 4L
49	REC324369	324369	MUELLE	SPRING	MOLLA	RESSORT
50	REC313448	313448	PASADOR DESPLAZABLE	CROSS PIN	CHIAVISTELLO	PIN
51	REC395209	395209	EJE (1986-90) Ø1-3/16	PROP SHAFT 1-3/16 Ø (1986-90)	ASSE (1986-90) Ø1-3/16	ARBRE (1986-90) Ø1-3/16
	REC5004765	5004765	EJE (1991-93) Ø1-1/4	PROP SHAFT 1-1/4 Ø (1991-93)	ASSE (1991-93) Ø1-1/4	ARBRE (1991-93) Ø1-1/4
	REC436888	436888	EJE HÉLICE GM 4L	PROP SHAFT GM 4L	ASSE ELICA GM 4L	ARBRE HÉLICE GM 4L
52	REC336565	336565	ARANDELA	THRUST WASHER	RONDELLA	RONDELLE
53	REC382408	382408	TOPE COJINETE	THRUST BEARING	RONDELLA CUSCINETO	FREIN ROULEMENT
54	REC314731	314731	TOPE ARANDELA	THRUST WASHER	RONDELLA	RONDELLE FREIN
55	REC967344	313446	ARO TÓRICO	O-RING	ANELLO	JOINT TORIQUE
56	REC382407	382407	COJINETE	BEARING	CUSCINETTO	ROULEMENT
57	REC5000074	5000074	COJINETE DIÁBOLO 1986-90)	BEARING CARRIER	CUSCINETTO DIAVOLO (1986-90)	DIABOLO (1986-90)
	REC5004257	5004257	COJINETE DIÁBOLO (1991-93)	BEARING CARRIER	CUSCINETTO DIAVOLO (1991-93)	DIABOLO (1991-93)
58	REC908158	908158	TORNILLO	SCREW	VITE	VIS
59	CM431708	431708	ANODO	ANODE	ANODO	ANODE
60	REC387247	387247	COJINETE (1986-90)	BEARING (1986-90)	CUSCINETTO (1986-90)	ROULEMENT (1986-90)
	REC434467	434467	COJINETE (1991-93)	BEARING (1991-93)	CUSCINETTO (1991-93)	ROULEMENT (1991-93)
	REC379504	379504	COJINETE GM 4L	BEARING	CUSCINETTO GM 4L	ROULEMENT GM 4L
61	REC333957	333957	PESTAÑA SUJECCIÓN	TAB	PIASTRA SUPORTO	BAGUE DE RETENUE
62	REC350271	350271	TORNILLO	SCREW	BULLONE	VIS
63	REC334950	334950	RETÉN (1986-90)	OIL SEAL (1986-90)	PARAOLIO (1986-90)	JOINT SPI (1986-90)
	REC330137	330137	RETÉN (1991-93)	OIL SEAL (1991-93)	PARAOLIO (1991-93)	JOINT SPI (1991-93)
64	REC126870	126870	TOPE ARANDELA	THRUST WASHER	RONDELLA	RONDELLE FREIN
65	REC320570	320570	TOPE HÉLICE	SPACER	SPESSORE	FREIN HÉLICE
66	REC398042	5008966	KIT TUERCA HÉLICE	NUT & KEEPER	KIT DADO ELICA	KIT ÉCROU HÉLICE
67	REC3852056	306394	PASADOR	COTTER PIN	CHIAVISTELLO	GOUPILLE

COBRA (1994-98)



REF
REC39631

	REF	OEM				
1	REC3852045	303067	ARANDELA	O-RING	RONDELLA	RONDELLE
2	REC3852317	3852317	JUNTA	GASKET	GUARNIZIONE	JOINT
3	REC3852568	3852568	TORNILLO	SCREW	VITE	VIS
4	REC853868	853858	RETEN ACEITE	OIL SEAL	PARAOLIO	POINT SPI
5	REC925093	925093	ARANDELA	O-RING	RONDELLA	RONDELLE
6	REC3852279	3852279	JUNTA	GASKET	GUARNIZIONE	JOINT
7	REC3855081	333572	JUNTA	GASKET	GUARNIZIONE	JOINT
8	REC3589522	3852561	TAPA	THRUST PLATE	COPERCHIO	COUVERCLE
9	REC3589524	3852562	TAPA	THRUST PLATE	COPERCHIO	COUVERCLE
10	REC3852165	910953	ARO RETENEDOR	RETAINING RING	TENUTA	JOINT TORIQUE
11	REC3852560	3852560	RETEN	SEAL	TENUTA	JOIINT TORIQUE
12	REC3850852	3850852	COJINETE	BEARING	CUSCINETTO	ROULEMENT
13	REC967344	3852308	ARANDELA	O-RING	RONDELLA	RONDELLE
14	REC3852454	908668	TORNILLO	SCREW	VITE	VIS
15	REC183247	3850853	COJINETE	BEARING	CUSCINETTO	ROULEMENT
16	REC3852272	3852272	RETEN ACEITE	OIL SEAL	PARAOLIO	JOINT SPI
17	REC3850814	3850814	EJE CORTO CARDAN	YOKE	ASSE CORTO CARDANO	ARBRE
18	REC393831	912213	CARDAN	SOCKET	CARDANO	CARDAN
19	REC3850812	3850812	CRUCETA CARDAN	U-JOINT	CROCETTA CARDANO	CROISILLON
20	REC59830A7	912212	UNION COLA MOTOR	YOKE-LONG	UNION COLA MOTORE	CARDAN
21	REC25-25439	3852565	ARANDELA	O-RING	RONDELLA	RONDELLE
22	REC3860842	3860842	TRANSMISIÓN	U-JOINT ASSY	TRASMISSSIONE	CARDAN AVEC ARBRE

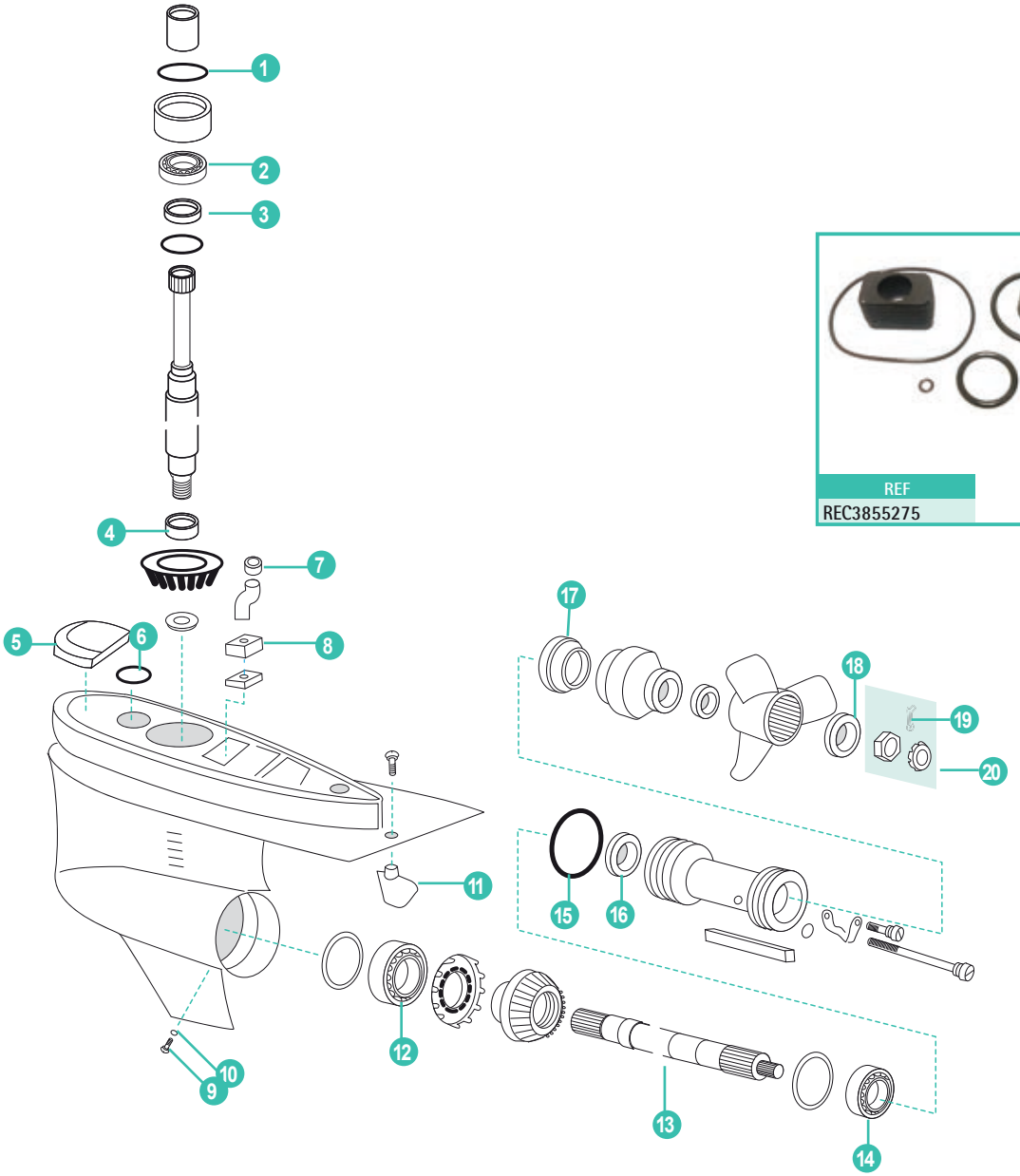

REF
REC3855275

	REF	OEM				
1	REC3852866	3852866	ARO	O-RING	ANELLO	JOINT SPI
2	REC31-86748A1	3854250	COJINETE	BEARING	CUSCINETTO	ROULEMENT
3	REC31-66668A1	3854249	COJINETE	BEARING	CUSCINETTO	ROULEMENT
4	REC3853934	3853934	COJINETE	BEARING	CUSCINETTO	ROULEMENT
5	CM3855411	3855411	ANODO	ANODE	ANODO	ANODE
6	REC3852959	3852959	ARO	O-RING	ANELLO	JOINT TORIQUE
7	REC3852315	3852315	SUPLEMENTO	GROMMET	SPESSORE	CALE
8	REC3854595	3854595	RETÉN	SEAL	TENUTA	JOINT SPI
9	REC22-67892A05	3854539	TORNILLO	SCREW	VITE	VIS
10	REC3855081	333572	ARANDELA	WASHER	RONDELLA	RONDELLE
11	REC854040	3854402	TIMON COLA	TRIM TAB	TIMONE PIEDE	ANODE
12	REC3850942	3850942	COJINETE	BEARING	CUSCINETTO	ROULEMENT
13	REC3857675	3857675	EJE HÉLICE	PROP SHAFT	ASSE ELICA	ARBRE HÉLICE
14	REC31-66668A1	3854249	COJINETE	BEARING	CUSCINETTO	ROULEMENT
15	REC3852865	3852865	ARO	O-RING	ANELLO	JOINT TORIQUE
16	REC3863090	3863090	RETÉN ACEITE	OIL SEAL	PARAOLIO	JOINT SPI
17	REC126870	126870	CIERRE HÉLICE	THRUST WASHER	CHIUSURA ELICA	RONDELLE FREIN
18	REC3852350	3852350	ESPACIADOR	SPACER	DISTANZIALE	CALE
19	REC3852056	306394	PASADOR	COTTER PIN	CHIAVISTELLO	GOUPILLE
20	REC398042	5008966	KIT TUERCA HÉLICE	NUT & KEEPER	KIT DADO	KIT ÉCROU D'HÉLICE

400-800 (1973-85)

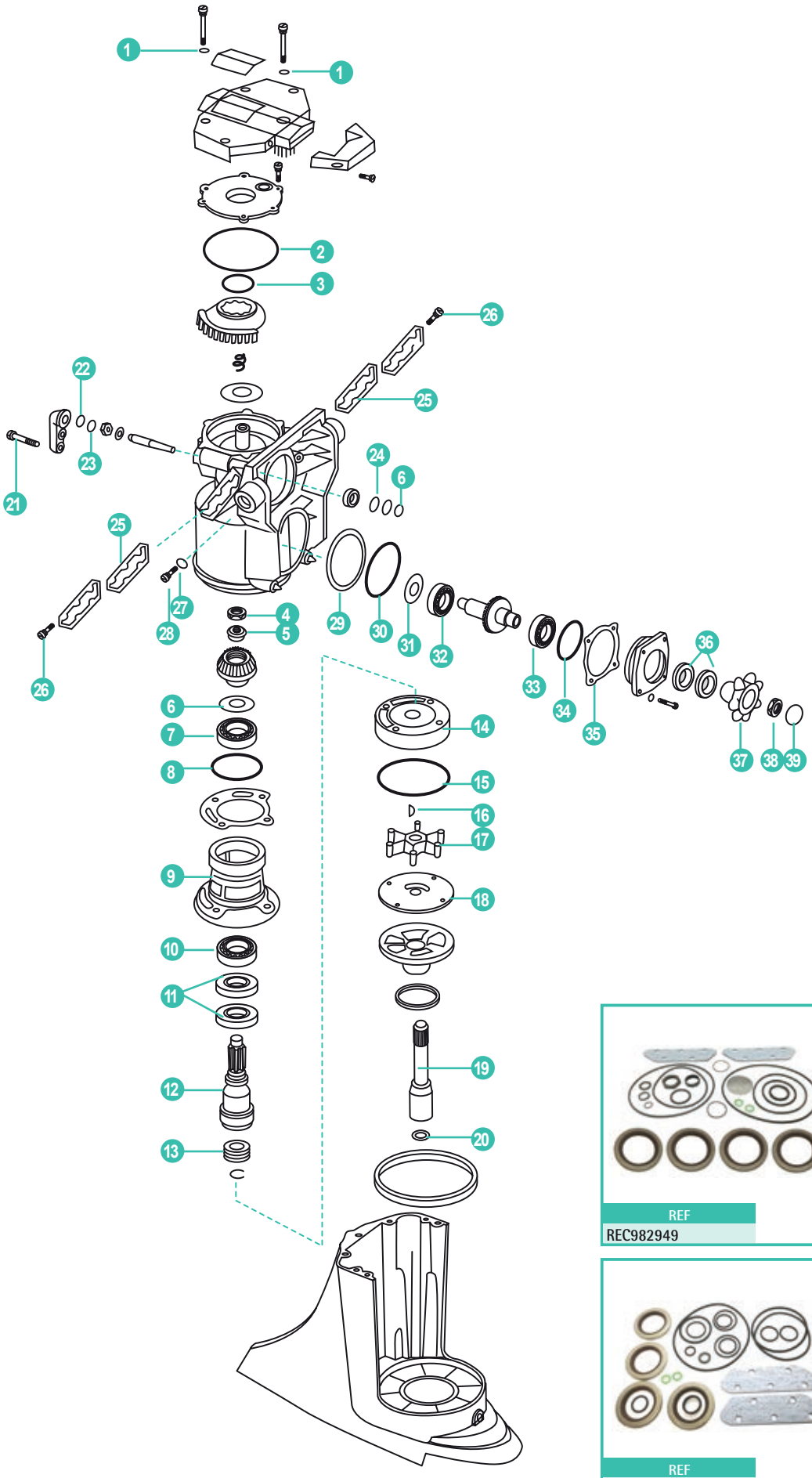

REF
REC982949

REF
REC981799

	REF	OEM				
1	REC315189	315189	JUNTA	GASKET	GUARNIZIONE	JOINT
2	REC313175	313175	ANILLO GOMA	O-RING	ANELLO IN GOMMA	JOINT EN CAOUTCHOUC
3	REC25-30224	310327	ANILLO GOMA (CAMBIO ELÉCTRICO)	O-RING (ELECTRIC SHIFT)	ANELLO IN GOMMA (CAMBIO ELETTRICO)	JOINT EN CAOUTCHOUC (CHANGEMENT ELÉCTRIQUE)
	REC25-30224	910582	ANILLO GOMA (400-800)	O-RING	ANELLO IN GOMMA (400-800)	JOINT EN CAOUTCHOUC (400-800)
4	REC907866	907866	CONTRATUERCA	LOCK NUT	CONTRO DADO	ÉCROU
5	REC909123	909123	TOPE PIÑÓN	CENTERING CONE	FERMO PIGNONE	CONE DE CENTRAGE
	REC313194	313193	SUPLEMENTO A .003	SHIM .003	SPESSORE .003	CALE .003
	REC313194	313194	SUPLEMENTO A .004	SHIM .004	SPESSORE .004	CALE .004
	REC313195	313195	SUPLEMENTO A .005	SHIM .005	SPESSORE .005	CALE .005
6	REC313196	313196	SUPLEMENTO A .006	SHIM .006	SPESSORE .006	CALE .006
	REC313197	313197	SUPLEMENTO A .007	SHIM .007	SPESSORE .007	CALE .007
	REC313198	313198	SUPLEMENTO A .008	SHIM .008	SPESSORE .008	CALE .008
	REC313199	313199	SUPLEMENTO A .009	SHIM .009	SPESSORE .009	CALE .009
	REC313200	313200	SUPLEMENTO A .010	SHIM .010	SPESSORE .010	CALE .010
7	REC379585	379585	COJINETES	BEARING	CUSCINETTO	ROULEMENT
8	REC553126	553126	ANILLO GOMA	O-RING	ANELLO IN GOMMA	JOINT EN CAOUTCHOUC
9	REC910240	910240	TAPA	BEARING HOUSING	COPERCHIO	COUVERCLE
10	REC382165	382165	COJINETE	BEARING	CUSCINETTO	ROULEMENT
11	REC981268	981268	RETÉN	OIL SEAL	PARAOLIO	JOINT SPI
	REC909121	909121	EJE TRANSMISIÓN	DRIVE SHAFT	ASSE TRASMISSIONE	ARBRE TRANSMISSION
12	REC981220	981220	EJE TRANSMISIÓN	DRIVE SHAFT	ASSE TRASMISSIONE	ARBRE TRANSMISSION
	REC382883	382883	EJE TRANSMISIÓN	DRIVE SHAFT	ASSE TRASMISSIONE	ARBRE TRANSMISSION
13	REC907774	907774	RETÉN EJE	SHAFT SEAL	TENUTA ASSE	JOINT D'HUILE ARBRE
14	REC983298	983298	CUERPO BOMBA AGUA	PUMP HOUSING	CORPO POMPA ACQUA	CORPS DE POMPE A EAU
15	REC910238	910238	ANILLO GOMA	O-RING	ANELLO	JOINT TORIQUE
16	REC308928	308924	CHAVETA	KEY	CHIAVETTA	CLAVETTE
17	REC777130	777130	IMPULSOR	IMPELLER	GIRANTE	TURBINE
18	REC313176	313176	TAPA BOMBA AGUA	PUMP PLATE	COPERCHIO POMPA ACQUA	COUVERCLE POMPA D'EAU
19	REC909753	909753	EJE CORTO BOMBA	SHORT DRIVE SHAFT	ASSE CORTO POMPA	ARBRE DE TRANSMISSION COURT
	REC908087	908087	EJE LARGO BOMBA	LONG DRIVE SHAFT	ASSE LUNGO POMPA	ARBRE DE TRANSMISSION LONG
20	REC314491	314491	ANILLO GOMA	O-RING	ANELLO	JOINT TORIQUE
21	REC305282	305282	TORNILLO	SCREW	VITE	VIS
22	REC125017	302540	ANILLO GOMA (ANTIGUO)	O-RING (EARLY MODEL)	ANELLO IN GOMMA (VECCHIO)	JOINT EN CAOUTCHOUC (ANCIEN)
	REC909140	909140	ANILLO GOMA (MODERNO)	O-RING (LATE MODEL)	ANELLO IN GOMMA (MODERNO)	JOINT EN CAOUTCHOUC (MODERNE)
23	REC909139	909139	RETÉN	QUAD RING	PARAOLIO	JOINT SPI
24	REC909048	909048	RETÉN	QUAD RING	PARAOLIO	JOINT SPI
25	REC308592	308592	JUNTA	GASKET	GUARNIZIONE	JOINT
26	REC328694	3852473	TORNILLO	SCREW	VITE	VIS
27	REC3855081	311598	JUNTA	GASKET	GUARNIZIONE	JOINT
28	REC22-67892A05	318544	JUEGO TORNILLOS	SCREW SET	KIT VITI	KIT VIS
29	REC308768	308768	RETÉN	SEAL	TENUTA	JOINT D'HUILE
30	REC308590	308590	MUELLE	SPRING	MOLLA	RESSORT
	REC313163	313163	SUPLEMENTO A .003	SHIM	SPESSORE .003	CALE .003
31	REC313164	313164	SUPLEMENTO A .004	SHIM	SPESSORE .004	CALE .004
	REC313167	313167	SUPLEMENTO A .007	SHIM	SPESSORE .007	CALE .007
32	REC375761	375761	COJINETE	BEARING	CUSCINETTO	ROULEMENT
33	REC382212	382212	COJINETES	BEARING	CUSCINETTO	ROULEMENT
34	REC25-35029	308621	ANILLO RETÉN	O-RING	ANELLO	JOINT D'HUILE
	REC313202	313202	SUPLEMENTO A .002	SHIM	SPESSORE .002	CALE .002
	REC313203	313203	SUPLEMENTO A .003	SHIM	SPESSORE .003	CALE .003
35	REC313204	313204	SUPLEMENTO A .004	SHIM	SPESSORE .004	CALE .004
	REC313205	313205	SUPLEMENTO A .005	SHIM	SPESSORE .005	CALE .005
	REC313206	313206	SUPLEMENTO A .006	SHIM	SPESSORE .006	CALE .006
36	REC981196	981196	RETÉN	OIL SEAL	PARAOLIO	JOINT D'HUILE
37	REC908069	908069	ENGRANAJE	BALL GEAR	INGRANAGGIO	ENGRENAGE
38	REC908064	908064	TUERCA	NUT	DADO	ÉCROU
39	REC908062	908062	TAPA	COVER	COPERCHIO	COUVERCLE

400-800 (1973-85)

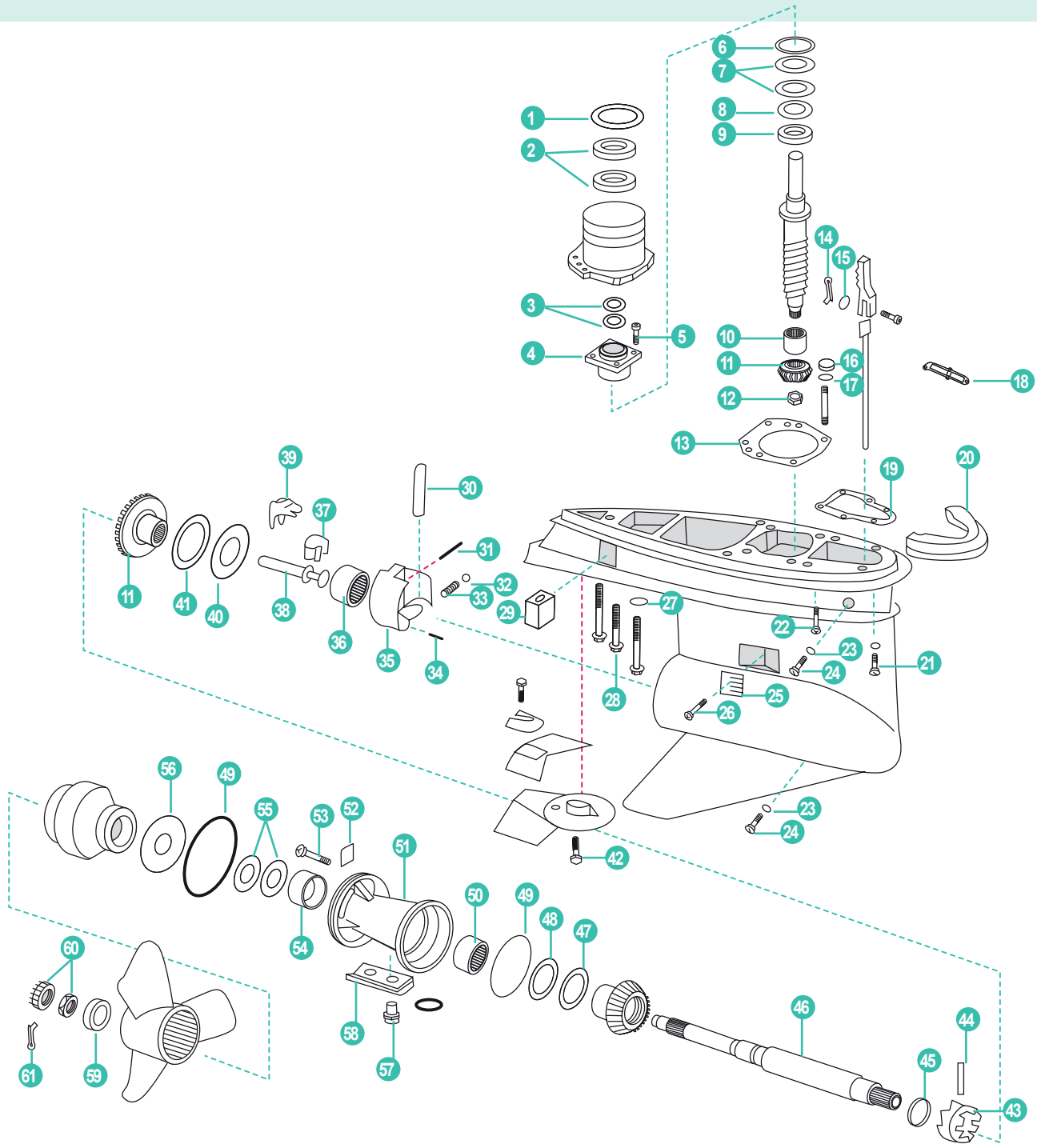

	REF	OEM				
1	PAGB/T848-6	305981	ARANDELA	O-RING	RONDELLA	RONDELLE
2	REC310649	310649	RETÉN	OIL SEAL	PARAOLI	JOINT D'HUILE
3	REC321467	321467	RETÉN	OIL SEAL	PARAOLIO	JOINT D'HUILE
4	REC982422	982422	TAPA RETENES	BEARING & HG SEAL	COPERCHIO PARAOLIO	COUVERCLE JOINTS D'HUILE
5	REC317624	317624	TORNILLO	SCREW	VITE	VIS
6	REC314728	314728	ANILLO GOMA	O-RING	ANELLO	JOINT TORIQUE
	REC314745	314745	SUPLEMENTO.005	SHIM	SPESSORE .005	CALE .005
7	REC323361	323361	SUPLEMENTO.004	SHIM	SPESSORE .004	CALE .004
	REC323362	323362	SUPLEMENTO.003	SHIM	SPESSORE .003	CALE .003
8	REC327656	327656	TOPE ARANDELA	THRUST WASHER	FERMO RONDELLA	RONDELLE
9	REC387656	387656	TOPE COJINETE	THRUST BEARING	FERMO CUSCINETTO	FREIN DE ROULEMENT
10	REC387817	387817	COJINETE	PINION BEARING	CUSCINETTO	ROULEMENT
	REC384195	384195	COJINETE GM 4CIL	PINION BEARING	CUSCINETTO GM 4 CIL	ROULEMENT GM 4CYL
11	REC320635	5004941	KIT COMPLETO PIÑONES 5.0,5.8-V8	P/FORWARD GEAR SET 5.0, 5.8-V8	KIT PIGNONI COMPLETO 5.0, 5.8 - V8	KIT PIGNONS AVANT

	REF	OEM				
12	REC11-35921	314730	TUERCA	NUT	DADO	ÉCROU
13	REC910236	910236	JUNTA	GASKET	GUARNIZIONE	JOINT
	REC338484	910338	JUNTA GM 4 CIL.	GASKET	GUARNIZIONE GM 4 CYL	JOINT GM 4 CYL
14	REC306376	306376	PASADOR	COTTER PIN	CHIAVISTELLO	GOUPILLE
15	REC328702	306358	ARANDELA	WASHER	RONDELLA	RONDELLE
16	REC11-8267089	121731	TUERCA	NUT	DADO	ÉCROU
17	REC313353	313353	RETÉN	OIL SEAL	PARAOLI	JOINT D'HUILE
18	REC909604	909604	JUNTA	GASKET	GUARNIZIONE	JOINT
19	REC324670	352165	JUNTA	GASKET	GUARNIZIONE	JOINT
20	CM983494	983494	ANODO	ANODE	ANODO	ANODE
21	REC912127	912127	TORNILLO	SCREW	VITE	VIS
22	REC331999	331999	TORNILLO 3/8X1 3/4-16	SCREW 3/8 X 1 3/4-16	VITE 3/8 X 1 3/4-16	VIS 3/8 X 1 3/4 - 16
23	REC3855081	311598	JUNTA	GASKET	GUARNIZIONE	JOINT
24	REC22-67892A05	318544	TORNILLO CON RETÉN	DRAINIG SCREW	BULLONE CON ANELLO	BOUCHON DE VIDANGE MAGNETIQUE + JOINT
25	REC337778	337778	REJILLA	SCREEN	GRIGLIA	GRILLE
26	REC337061	337061	TORNILLO	SCREW	BULLONE	VIS
27	REC330265	330265	ARANDELA	LOCK WASHER	RONDELLA	RONDELLE
28	REC328096	328096	TORNILLO	SCREW	VITE	VIS
29	CM393023	436745	ANODO	ANODE	ANODO	ANODE
30	REC910310	910310	EJE RETENEDOR	PIN	ASSE RITENITORE	ARBRE DE RETENUE
31	REC328825	328825	PASADOR	PIN	CHIAVISTELLO	GOUPILLE
	REC313448	320145	PASADOR 4 CIL	PIN	CHIAVISTELLO 4 CIL	GOUPILLE 4 CYL
32	REC160084	160084	BOLA	DETENT BALL	BOLLA	BOULE
33	REC911962	911962	MUELLE	SPRING	MOLLA	RESSORT
34	REC331880	331880	PASADOR	PIN	CHIAVISTELLO	GOUPILLE
35	REC389455	389455	TAPA COJINETE	HSNG & BRING ASSY.	COPERCHIO CUSCINETTO	COUVERCLE ROULEMENT
36	REC389039	389039	COJINETE	BEARING	CUSCINETTO	ROULEMENT
	REC382407	382407	COJINETE 4 CIL	BEARING	CUSCINETTO	ROULEMENT 4 CYL
37	REC334163	982422	REGULADOR EJE	CRADLE	REGOLATORE ASSE	REGULATEUR D'ARBRE
38	REC322941	322941	EJE	SHAFT	ASSE	ARBRE
39	REC322938	322938	UÑA DESPLAZABLE	LEVER	CHIAVETTA	CROCHET
40	REC327669	327669	TOPE ARANDELA	THRUST WASHER	FERMO RONDELLA	RONDELLE FREIN
	REC324766	324766	TOPE ARANDELA 4 CIL	THRUST WASHER	FERMO RONDELLA 4 CIL	RONDELLE FREIN 4 CYL
41	REC389042	389042	TOPE COJINETE	THRUST BEARING	FERMO CUSCINETTO	FREIN ROULEMENT
	REC385043	385043	TOPE COJINETE 4 CIL	THRUST BEARING	FERMO CUSCINETTO 4 CIL	FREIN ROULEMENT 4 CYL
42	REC313715	313715	TORNILLO	SCREW	VITE	VIS
43	REC337774	337774	DESPLAZABLE	CLUTCH DOG	SCORREVOLE	CRABOT
	REC323664	323664	DESPLAZABLE	CLUTCH DOG	SCORREVOLE	CRABOT
44	REC313448	313448	PASADOR DESPLAZABLE	CROSS PIN	CHIAVISTELLO SCORREVOLE	GOUPILLE DU CRABOT
45	REC324369	324369	MUELLE	SPRING	MOLLA	RESSORT
46	REC395209	395209	EJE HÉLICE 800 MOD.	PROP SHAFT	ASSE ELICA 800	ARBRE D'HÉLICE 800
	REC436888	436888	EJE HÉLICE 1976-86	PROP SHAFT	ASSE ELICA 1976-86	ARBRE D'HÉLICE 1976-86
47	REC382408	382408	TOPE COJINETE	THRUST BEARING	FERMO CUSCINETTO	FREIN DE ROULEMENT
48	REC314731	314731	TOPE ARANDELA	THRUST WASHER	FERMO RONDELLA	RONDELLE FREIN
49	REC305123	305123	ARO	O-RING	ANELLO	JOINT TORIQUE
	REC313446	313446	ARO 4 CIL	O-RING	ANELLO 4 CYL	JOINT TORIQUE4 CYL
50	REC382407	382407	COJINETE	BEARING	CUSCINETTO	ROULEMENT
51	REC5000074	5000074	COJINETE DIÁBOLO	BEARING CARRIER	CUSCINETTO DIAVOLO	DIABOLO
52	REC333957	333957	PESTAÑA SUJECCIÓN	TAB	TAB	BAGUE DE RETENUE
53	REC350271	350271	TORNILLO	SCREW	VITE	VIS
54	REC387247	387247	COJINETE	BEARING	CUSCINETTO	ROULEMENT
	REC379504	379504	COJINETE 4 CIL	BEARING	CUSCINETTO 4 CIL	ROULEMENT 4 CYL
55	REC26-76868	320862	RETÉN	OIL SEAL	PARAOLIO	JOINT D'HUILE
	REC330137	330137	RETÉN 4 CIL	OIL SEAL	PARAOLIO 4 CIL	JOINT D'HUILE 4 CYL
56	REC126870	126870	TOPE ARANDELA (800)	THRUST WASHER	FERMO CUSCINETTO 800	RONDELLE FREIN 800
	REC127084	127084	TOPE ARANDELA 4 CIL	THRUST WASHER	FERMO CUSCINETTO 4 CIL	RONDELLE FREIN 4 CYL
57	REC908158	908158	TORNILLO	SCREW	VITE	VIS
58	CM431708	431708	ANODO	ANODE	ANODO	ANODE
59	REC320570	320570	TOPE HÉLICE (800)	SPACER	FERMO ELICA 800	RONDELLE BUTEE D'HELICE 800
	REC315810	315810	TOPE HÉLICE (400)	SPACER	FERMO ELICA 400	RONDELLE BUTEE D'HELICE400
60	REC314503	5008966	TUERCA 4 CIL	NUT	DADO 4 CIL	ÉCROU 4CYL
	REC398042	398042	TUERCA (800)	NUT	DADO 800	ÉCROU 800
61	REC314502	314502	PASADOR 4 CIL	PIN	CHIAVISTELLO 4 CIL	GOUPILLE 4 CYL
	REC3852056	306394	PASADOR (800)	PIN	CHIAVISTELLO 800	GOUPILLE 800

TRANSOM
COBRA (1986-93)

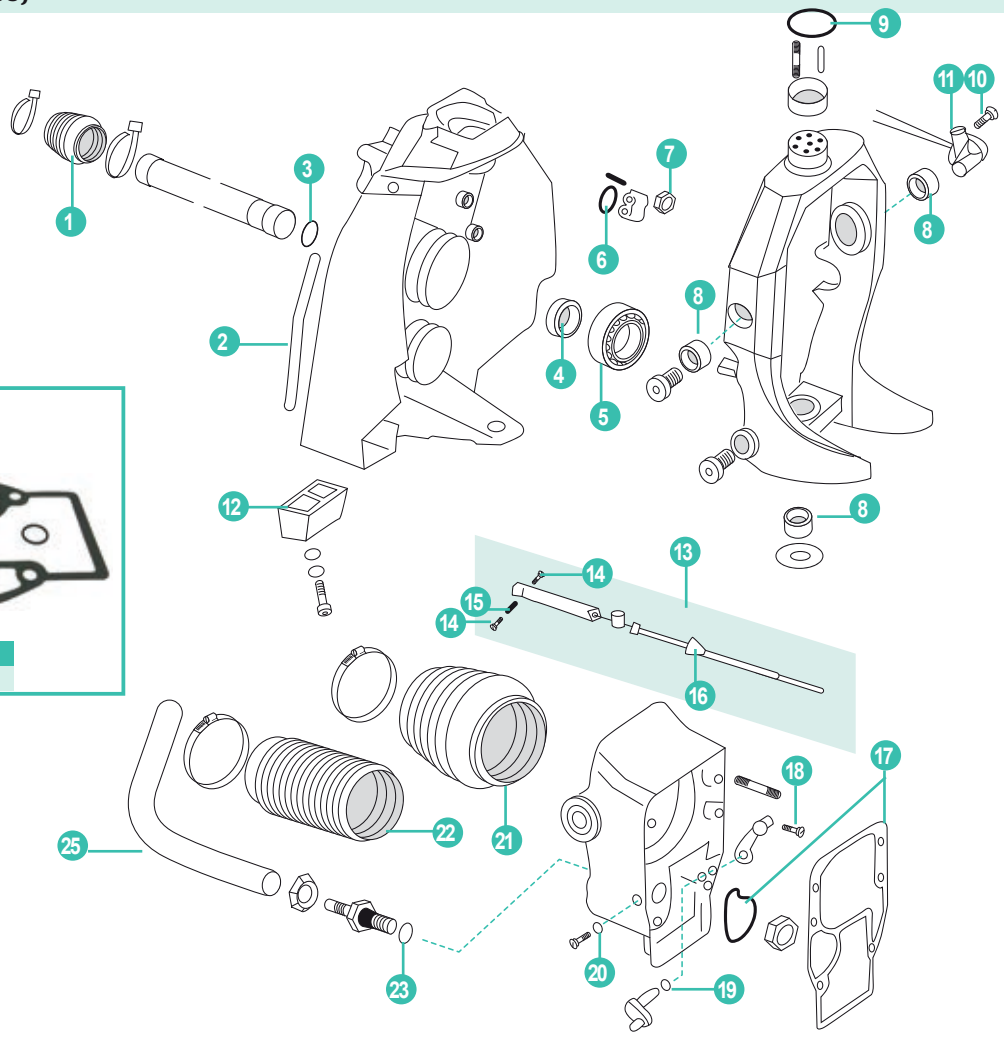



REF
REC915840

	REF	OEM				
1	CEF500506	911826	FUELLE CABLE CAMBIO	SHIFT CABLE BELLOW	CUFFIA CAVO CAMBIO	SOUFFLET CABLE CHANGEMENT
2	REC3852550	3852550	JUNTA TRANSOM	GASKET	GUARNIZIONE	JOINT
3	REC309731	911871	ARO	O-RING	ANELLO	JOINT TORIQUE
4	REC3852548	3852548	RETÉN TRASERO	REAR SEAL	PARAOLIO POSTERIORE	JOINT D'HUILE ARRIERE
5	REC30-879194A01	3853807	COJINETE TRANSON	GIMBAL BEARING	CUSCINETTO TRANSOM	ROULEMENT TRANSOM
6	REC331188	322501	ARO	O-RING	ANELLO	JOINT TORIQUE
7	REC11-8267089	121731	TUERCA	LOCK NUT	DADO	ÉCROU
8	REC3808228	3852544	CASQUILLO	PIVOT PIN BEARING	BOCCOLA	BAGUE
9	REC25-33145	302337	ARO	O-RING	ANELLO	JOINT TORIQUE
10	REC308825	308825	TORNILLO	SCREW	VITE	VIS
11	RM3850470	3850470	SENSOR TRIM	TRIM SONDE	SENSORE TRIM	CAPTEUR TRIM
12	TEN00919	3853930	ANODO	ANODE	ANODO	ANODE
13	REC987661	987661	CABLE CAMBIO COBRA	SHIFT CABLE ASSEMBLY	CAVO CAMBIO COBRA	CÂBLE CHANGEMENT COBRA
	REC987678	987678	CABLE CAMBIO KING COBRA	SHIFT CABLE ASSEMBLY (KING COBRA)	CAVO CAMBIO KING COBRA	CÂBLE CHANGEMENT KING COBRA
14	REC10-20518	912304	TORNILLO	SET SCREW	VITE	VIS
15	REC43436	915918	ANCLAJE	ANCHOR	FERMO	ANCRAGE
16	REC304174	304174	ARO TORICO	O-RING	ANELLO	JOINT TORIQUE
17	REC915840	915840	KIT DE JUNTAS	GASKET SET	KIT GUARNIZIONE	KIT DE JOINTS
18	REC908158	908158	TORNILLO	SCREW	VITE	VIS
19	REC25-48171	202893	ARO TORICO	O-RING	ANELLO	JOINT TORIQUE
20	REC332583	911311	ARO	O-RING	ANELLO	JOINT TORIQUE
21	REC3841481	3854127	FUELLE TRANSON	U-JOINT BELLOW	CUFFIA TRANSON	SOUFFLET DE CARDAN
	CEF500514K	3854127	FUELLE TRANSON	U-JOINT BELLOW	CUFFIA TRANSON	SOUFFLET DE CARDAN
22	REC914036	914036	FUELLE ESCAPE	EXHAUST BELLOW	CUFFIA SCARICO	SOUFFLET D'ÉCHAPPEMENT
	CEF500527K	914036	FUELLE ESCAPE	EXHAUST BELLOW	CUFFIA SCARICO	SOUFFLET D'ÉCHAPPEMENT
23	REC3852535	911718	ARO	O-RING	ANELLO	JOINT TORIQUE
24	REC3852352	911830	TUBO SUBIDA AGUA	TRIM HOSE UP	TUBO ACQUA	DURITE D'EAU

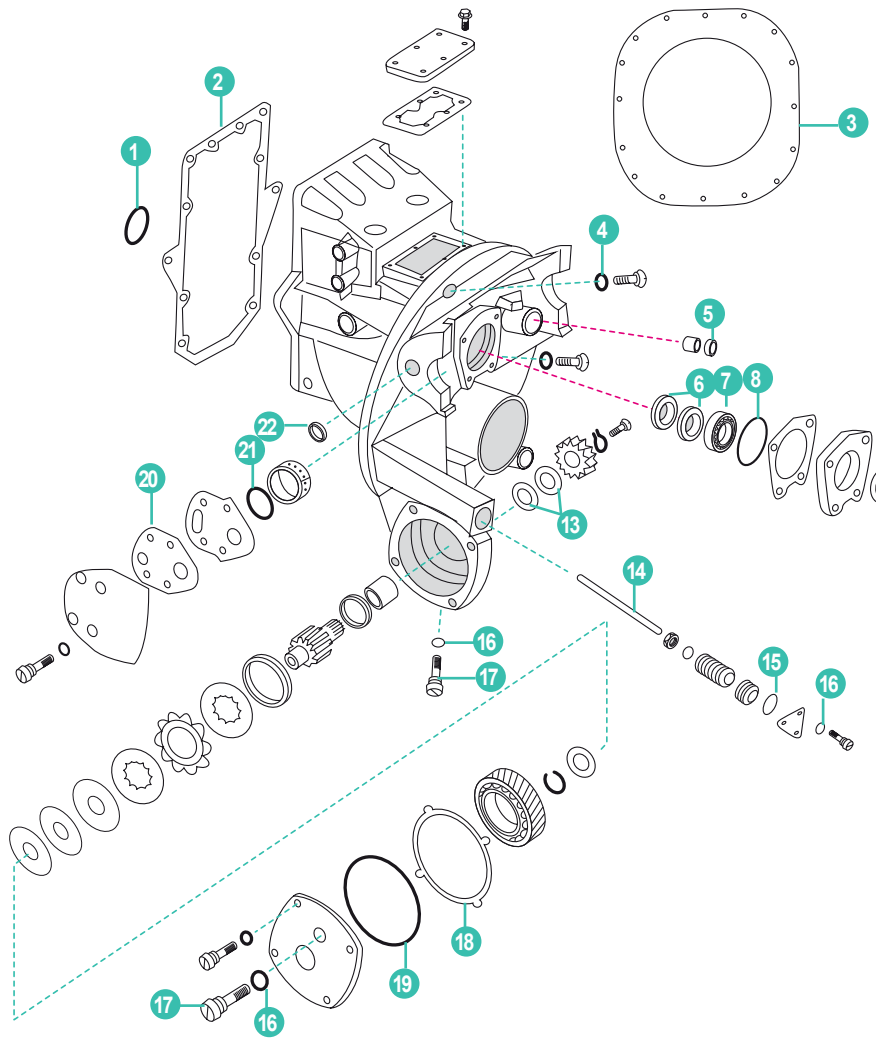

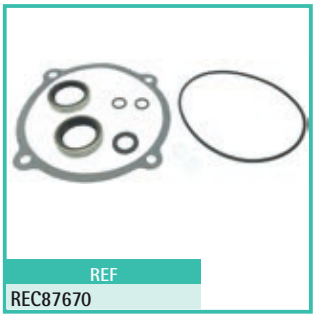

REF
REC87670



REF
REC87660

	REF	OEM				
1	REC25-33145	302337	ARO GOMA	O-RING	ANELLO	JOINT TORIQUE
2	REC909515	909515	JUNTA	GASKET	GUARNIZIONE	JOINT
3	REC313080	313080	GOMA TRANSOM 120HP (1967-77)	PLATE SEAL 120 HP (1967-77)	GOMMA TRANSON 120 HP (1967-77)	JOINT DE TRANSOM120HP (1967-77)
	REC909527	909527	GOMA TRANSOM (1978-86)	PLATE SEAL (1978-86)	GOMMA TRANSON (1978-86)	JOINT DE TRANSOM(1978-86)
4	REC315189	315189	JUNTA	GASKET	GUARNIZIONE	JOINT
5	REC908855	908855	RETÉN	OIL SEAL	PARAOLIO	JOINT D'HUILE
6	REC26-419533	764337	RETÉN	OIL SEAL	PARAOLIO	JOINT D'HUILE
7	REC31-86748A1	3854250	COJINETE	BEARING	CUSCINETTO	ROULEMENT
8	REC908383	908383	ARO	O-RING	ANELLO	JOINT TORIQUE
9	REC981195	981195	RETÉN	OIL SEAL	PARAOLIO	JOINT D'HUILE
10	REC908063	908063	ENGRANAJE	BALL GEAR	INGRANAGGIO	ENGRENAGE
11	REC908064	908064	TUERCA	NUT	DADO	ÉCROU
12	REC908062	908062	TAPA	COVER	COPERCHIO	COUVERCLE
13	REC321467	321467	RETÉN	OIL SEAL	PARAOLIO	JOINT D'HUILE
14	REC980183	980183	EJE ELEVADOR	TILT SHAFT	ALBERINO	ARBRE DE TILT
15	REC125017	302540	ARO	O-RING	ANELLO	JOINT TORIQUE
16	REC3855081	311598	JUNTA	GASKET	GUARNIZIONE	JOINT
17	REC10-79953Q04	307551	TORNILLO	SCREW	VITE	VIS
18	REC308799	308799	JUNTA	GASKET	GUARNIZIONE	JOINT
19	REC908194	908194	ARO GOMA	O-RING	ANELLO	JOINT TORIQUE
20	REC323338	316499	JUNTA CAMBIO ELECTRÓNICO	ELEC. SHIFT GASKET	GUARNIZIONE CAMBIO ELETTRONICO	JOINT CHANGEMENT ELECTRONIQUE
21	REC25-457101	308626	ARO GOMA	O-RING	ANELLO	JOINT TORIQUE
22	REC313244	313244	JUNTA	GASKET	GUARNIZIONE	JOINT

COLAS / DRIVES / PIEDI / EMBASES

REF	OEM
REC915840	915840



REF	OEM	
REC981801	981801	100 - 245 (1968-72)



400-800

REF	OEM	
REC981797	981797	100 - 245 (1968-77) Cambio eléctrico | electric shift | cambio elettrico | changement éléctrique

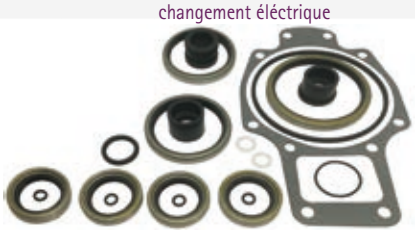

REF	OEM	
REC982946	982946	V6-V8 (1978-86) Cambio mecánico | mechanic shift | cambio meccanico | changement mécanique

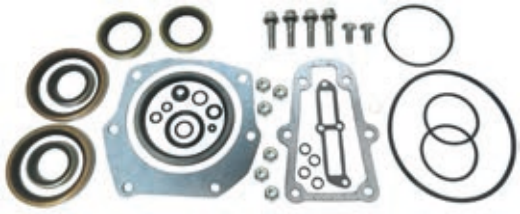

REF	OEM	
REC982947	982947	4 Cil. (1978-86) Cambio mecánico | mechanic shift | cambio meccanico | changement mécanique

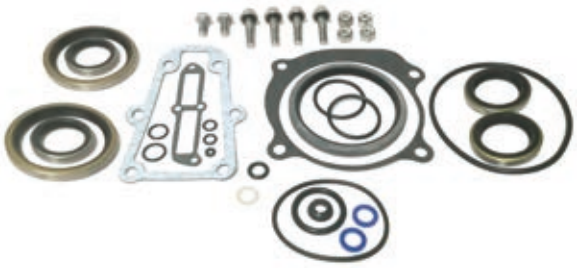

GOMAS TRANSOM / PLATE SEAL / GOMMA TRANSOM / JOINT DE TRANSOM

REF	OEM	
REC313080	982946	(1967-77) 120 HP+
REC909527	909527	(1978-86)



TRANSOM

KIT	REF	OEM				
	REC125017	302540	ARO	O-RING	ANELLO	BAGUE
	REC308799	308799	JUNTA	GASKET	GAURNIZIONE	JOINT
REC87660	REC12-191833	311598	ARANDELA	WASHER	RONDELLA	RONDELLE
	REC908194	908194	ARO	O-RING	ANELLO	BAGUE
	REC911019	911019	RETÉN	OIL SEAL	PARAOLIO	OINT SPI



KIT	REF	OEM				
	REC125017	302540	ARO	O-RING	ANELLO	BAGUE
	REC308799	308799	JUNTA	GASKET	GAURNIZIONE	JOINT
REC87670	REC3855081	311598	ARANDELA	WASHER	RONDELLA	RONDELLE
	REC908194	908194	ARO	O-RING	ANELLO	BAGUE
	REC321467	321467	RETÉN	OIL SEAL	PARAOLIO	OINT SPI

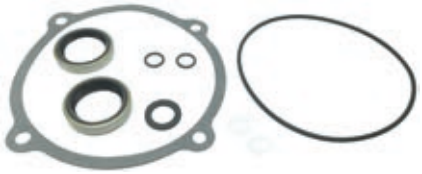

EJES BOMBA AGUA | WATER PUMP SHAFT | ASSE POMPA ACQUA | ARBRE POMPE D'EAU

REF	OEM
REC909753	909753
REC908087	908087



KIT BOMBA AGUA | WATER PUMP KIT | KIT POMPA ACQUA | KIT POMPE D'EAU

KIT	OEM	
REC879031	983218	100 - 260 (1962-85) COBRA

REF	OEM				
REC310584	310584	ARO	O-RING	ANELLO	BAGUE
REC25-30613	310585	ARO	O-RING	ANELLO	JOINT
REC313176	313178	TAPA BOMBA	PUMP PLATE	COPERCHIO POMPA	RONDELLE
REC314491	314491	ARO	O-RING	ANELLO	BAGUE
REC777130	379475	TURBINA	IMPELLER	GIRANTE	TURBINE
REC907774	907774	RETÉN	OIL SEAL	PARAOLIO	JOINT SPI
REC910238	910238	ARO	O-RING	ANELLO	BAGUE
REC983298	983298	CARCASA	PUMP HOUSING	CARCASSA POMPA	CARCASSE



JUNTAS | GASKETS | GUARNIZIONE | JOINTS

VARILLA ACEITE | DIPSTICK | ASTICELLA DELL'OLIO | TIGE D'HUILE

REF	OEM
REC315189	315189



CIERRE COBRA | OUTDRIVE SEAL COBRA | CHIUSURA COBRA | FERMETURE COBRA

REF	OEM
REC3852560	3852560



SALIDA AGUA | WATER OUTLET | PASSAGGJO DELL ACQUA | SORTIE D'EAU

REF	OEM
REC27-8146801	311069 3789161GM



CAMBIO MECÁNICO | SWIVEL BRG. MECH SHIFT | CAMBIO MECCANICO | CHANGEMENT MECANIQUE

REF	OEM
REC338484	910338 324701 338484



CAMBIO ELECTRÓNICO | SWIVEL BRG. ELECT. SHIFT | CAMBIO ELETTRONICO | CHANGEMENT ELECTRONIQUE

REF	OEM
REC313386	313368



GUÍA AROS TÓRICOS O´RING GUIDE GUIDA TENUTE GUIDE JOINTS SPI

REF.	OEM	Ø INT	Ø EXT	GRUESO THICK SPESSORE ESPESEUR
REC25-48171	202893	3/8	1/2	1/16
REC301877	301877	31/128	73/128	21/128
REC301967	301967	13/16	1	3/32
REC25-33145	302337	2	21/4	1/8
REC302537	302537	13/8	19/16	3/32
REC125017	302540	1	11/4	1/8
REC302588	302588	13/4	2	1/8
REC3852045	303067	3/8	9/16	3/32
REC25-62702	303191	5/16	7/16	1/16
REC303347	303347	7/16	5/8	3/32
REC25-35027	303360	11/16	15/16	1/8
REC304174	304174	1/2	5/8	1/16
REC305123	305123	33/4	4	1/8
REC305242	305242	5/16	9/16	1/8
REC3852928	305270	15/8	17/8	1/8
REC332583	305739	1/4	3/8	1/16
REC25-80863	307082	25/8	27/8	1/8
REC307450	307450	7/16	9/16	1/16
REC25-38933	307853	7/32	11/32	1/16
REC25-35029	308621	31/8	33/8	1/8
REC25-29845	308624	15/16	11/8	3/32
REC25-457101	308626	17/16	15/8	3/32
REC308627	308627	21/4	21/2	1/8
REC308876	308876	21/4	27/16	3/32
REC309731	309731	13/16	13/8	3/32
REC310414	310141	35/8	37/8	1/8
REC25-30224	310327	17/8	21/8	1/8
REC310414	310414	35/8	37/8	1/8
REC310584	310584	3/4	1	1/8
REC25-30613	310585	3/4	15/16	3/32
REC25-30613	310967	3/4	15/16	3/32
REC25-62705	311338	3/4	7/8	1/16
REC313175	313175	43/4	5	1/8
REC313340	31340	111/16	17/8	3/32
REC967344	313446	33/8	35/8	1/8
REC313754	313754	17/8	21/16	3/32
REC314491	314491	1	11/8	1/16
REC314728	314728	21/8	25/16	3/32
REC332583	317178	1/4	3/8	1/16
REC318372	318372	8 mm	16 mm	4 mm

REF.	OEM	Ø INT	Ø EXT	GRUESO THICK SPESSORE ESPESEUR
REC318717	318717	11/2	17/8	3/16
REC319085	319085	11/8	11/2	3/16
REC925093	320303	23/4	3	1/8
REC25-38933	321117	3/16	5/16	1/16
REC331188	322501	15/16	11/2	3/32
REC25-38933	322598	7/32	11/32	1/16
REC326649	326649	5/8	13/16	3/32
REC326741	326741	41/2	43/4	1/8
REC326849	326849	41/4	41/2	1/8
REC301877	326956	31/128	73/128	21/128
REC301877	326959	31/128	73/128	21/128
REC326649	329380	5/8	13/16	3/32
REC3852045	329381	3/8	9/16	3/32
REC332583	332583	1/4	3/8	1/16
REC332583	332584	1/4	3/8	1/16
REC333572	333572	1/4	7/16	3/32
REC338518	338518	29/16	23/4	3/32
REC338522	338522	15/8	113/16	3/32
REC339543	339543	1/2	11/16	3/32
REC25-25439	3852565	7/8	111/16	3/32
REC553126	553126	31/4	31/2	1/8
REC908194	908194	4	43/16	3/32
REC908383	908383	21/2	211/16	3/32
REC326649	909047	5/8	13/16	3/32
REC909048	909048	1/2	11/16	3/32
REC909139	909139	1	11/4	1/8
REC909140	909140	11/16	113/16	1/16
REC909316	909316	11/2	111/16	3/32
REC3852045	909747	5/16	1/2	3/32
REC910238	910238	51/4	51/2	1/8
REC25-30224	910582	17/8	21/8	1/8
REC332583	911311	1/4	3/8	1/16
REC25-70937	911686	31/2	33/4	1/8
REC911700	911700	41/8	43/8	1/8
REC3852535	911718	11/16	11/4	3/32
REC309731	911871	13/16	13/8	3/32

GUÍA RETENES ACEITE OIL SEAL GUIDE GUIDA PARAOLIO GUIDE JOINTS SPI

REF.	OEM	EJE SHAFT SIZE ASSE ARBRE	CALIBRE BORE SIZE CALIBRE ASDFASD
REC302564	302564	0.7813	1.3750
REC303345	303345	0.5625	1.0000
REC767970	305987	1.0000	1.3750
REC309989	309989	1.3750	2.0000
REC310599	310599	1.0000	1.5000
REC310649	310649	2.5000	3.0000
REC313282	313282	0.5540	1.0625
REC313284	313284	0.6250	1.1250
REC313353	313353	1.9375	2.4375
REC26-419533	313392	1.1875	1.8750
REC314167	314167	0.4219	0.9375
REC341281	314218	1.2500	1.6875
REC341281	314281	1.2500	1.6875
REC318972	318972	0.50000	0.8750
REC29-47270	318972	0.5000	0.8750
REC26-76868	320862	1.1875	1.6875
REC26-69188	321453	0.8750	1.2500
REC321459	321459	0.6250	1.1250
REC321466	321466	0.7500	1.1250
REC321467	321467	1.0000	1.3750
REC321480	321480	0.5000	1.2500
REC321481	321481	0.6875	1.2500
REC321786	321786	0.6250	1.1250
REC321787	321787	0.6250	1.1250
REC321788	321788	0.5000	1.0000
REC321831	321831	0.7500	1.2500

REF.	OEM	EJE SHAFT SIZE ASSE ARBRE	CALIBRE BORE SIZE CALIBRE ASDFASD
REC321895	321895	1.6250	1.9219
REC321928	321928	0.6250	1.3750
REC324639	324639	0.4375	0.9375
REC327031	327031	0.4375	0.8750
REC26-76868	3286	1.1875	1.6875
REC329922	329922	0.8750	1.3750
REC329923	329923	0.8750	1.3750
REC330137	330137	1.2500	1.6250
REC330327	330327	0.6250	1.1250
REC331103	331103	1.1250	1.6250
REC342786	332205	0.7500	1.1250
REC332261	332261	0.6250	1.3750
REC334950	334950	1.2500	1.6875
REC339620	339620	1.6250	2.1250
REC341280	341280	0.8750	1.3750
REC353076	353076	1.6250	2.0625
REC3852272	3852272	45 mm	75 mm
REC3853655	3853655	0.5000	0.9062
REC853868	3853858	25 mm	35 mm
REC908855	908855	0.6250	1.0000
REC911019	911019	1.0000	2.5000
REC911685	911685	2.0000	2.5000
REC981195	981195	1.5000	2.1250
REC981196	981196	1.7500	2.5000
REC981268	981268	1.6250	2.5000

APLICACIÓN DE RETENES COBRA | COBRA SEALS APPLICATIONS | APPLICAZIONI PARAOLI COBRA | GUIDE JOINTS SPI COBRA

		REF					CANTIDAD QUANTITY QUANTITÀ QUANTITÉ
TRANSOM							
262 - 460	1988-90	REC3852548	EJE	DRIVESHAFT	ASSE	ARBRE	1
PARTE SUPERIOR | UPPER GEARCASE | PARTE SUPERIORE | PARTIE SUPÉRIEURE							
262 - 460	1988-90	REC911685	COJINETE	BEARING CARRIER	CUSCINETTO	ROULEMENT	1
350 - 460	1988-90	REC3853655	EJE BOMBA	PUMP SHAFT	ASSE POMPA	ARBRE POMPE	1
2.3 L - 7.5 L	1986-88	REC3853655	EJE BOMBA	PUMP SHAFT	ASSE POMPA	ARBRE POMPE	1
2.3 L - 7.5 L 5.7 L (1990) 574 AMPWS, ARPWS	1986-90	REC911685	COJINETE	BEARING CARRIER	CUSCINETTO	ROULEMENT	1
PARTE INFERIOR | LOWER GEARCASE | PARTE INFERIORE | PARTIE INFÉRIEURE							
262 - 460	1988-89	REC26-76868	EJE HÉLICE	PROP SHAFT	ASSE ELICA	ARBRE HÉLICE	2
2.3 L	1990	REC330137	EJE HÉLICE	PROP SHAFT	ASSE ELICA	ARBRE HÉLICE	2
2.3 L - 3.0 L	1986-89	REC330137	EJE HÉLICE	PROP SHAFT	ASSE ELICA	ARBRE HÉLICE	2
3.0 L	1990	REC26-76868	EJE HÉLICE	PROP SHAFT	ASSE ELICA	ARBRE HÉLICE	2
4.3 L - 7.5 L	1986-90	REC26-76868	EJE HÉLICE	PROP SHAFT	ASSE ELICA	ARBRE HÉLICE	2

GUIA CORREAS | V-BELTS GUIDE | GUIDA CINGHIE | GUIDE COURROIES

		BOMBA AGUA WATER PUMP POMPA ACQUA POMPA D'EAU	DIRECCIÓN HIDRÁULICA POWER STEERING IDROGUIDA DIRECTION HYDRAULIQUE	ALTERNADOR ALTERNATOR ALTERNATORE ALTERNATEUR	REF	OEM
120 165 190 140 170 235 145 175 240 GAS 4 151		✔		✔	REC3852106	311606
140		✔		✔	REC829207	310953
155 225 245 185 230 250 210 235 260 215 240 V-6, V-8		✔		✔	REC3858462	311046
165	1972-76	✔		✔	REC3852106	311606
165C, 165S 40-1/4"		✔		✔	REC3858462	
165C, 165S 43-3/4"		✔		✔	REC966382	
170	1974	✔		✔	REC3852106	311606
175	1975-77	✔		✔	REC3852106	311606
		✔		✔	REC3858462	311046
185	1978-84	✔	✔	✔	REC829207	909971
		✔	✔		REC829207	909971
190	1974-77	✔		✔	REC3852106	311606
190 225 44-1/4"		✔			REC3858462	
		✔		✔	REC3858462	311046
200	1979-81	✔	✔	✔	REC829207	909971
		✔	✔		REC829207	909971
210	1970-71	✔		✔	REC3858462	311046
215		✔		✔	REC966382	
GAS V-8 302 Ford		✔			GDY17335	
	1971	✔		✔	REC3858462	311046
225	1972-84	✔		✔	REC3858462	311046
250	1973	✔		✔	REC3858462	311046
		✔		✔	REC3858462	311046
	1979-81	✔	✔	✔	REC829207	909971
230		✔	✔		REC829207	909971
260		✔		✔	REC3858462	311046
	1975	Salada | Sea Salata | Salée			REC3852464	3852464
	1971	✔		✔	REC3858462	311046
235	1975-77	✔		✔	REC3852106	311606
240	1975-84	✔		✔	REC3852106	311606
250	1979	✔		✔	REC3852106	311606
245 Jet Drive	1973-75	✔		✔	REC3852106	311606

		BOMBA AGUA WATER PUMP POMPA ACQUA POMPA D'EAU	DIRECCIÓN HIDRÁULICA POWER STEERING IDROGUIDA DIRECTION HYDRAULIQUE	ALTERNADOR ALTERNATOR ALTERNATORE ALTERNATEUR	REF	OEM
		✔		✔	REC57-48122Q	3852504
		✔		✔	REC3852106	311606
262 King Cobra 4.3L (V-6 262)	1989	✔	✔		REC3852464	3852464
		Salada | Sea Salata | Salée			GDY15386	910414
290 Jet Drive	1974-75	✔		✔	REC3858462	311046
		✔		✔	REC3858462	311046
305 V-8 305	1977-84	46" Salada | Sea Salata | Salée			REC3852464	3852464
		50" Salada | Sea Salata | Salée			REC57-96834Q	912714
325 390 V-8 427				✔	REC57-48122Q	
		✔		✔	REC3858462	311046
350 V-8 350	1977-84	46" Salada | Sea Salata | Salée			REC3852464	3852464
		50" Salada | Sea Salata | Salée			REC57-96834Q	912714
350 King Cobra		✔		✔	REC3852464	3852464
5.7L (V-8 350)	1988	✔	✔	✔	REC57-48122Q	3852504
370		✔		✔	REC57-78200Q1	3852504
			✔		GDY15386	910414
V-8 454		Salada | Sea Salata | Salée			REC57-48122Q	3852504
454		✔		✔	REC3852464	3852464
V-8 454	1977-82	Salada | Sea Salata | Salée			REC57-96834Q	912714
454 King Cobra		✔	✔		REC57-78200Q1	3852504
			✔		GDY15386	910414
V-8 454		Salada | Sea Salata | Salée			REC57-48122Q	3852504
460 King Cobra	1988	✔		✔	REC829207	909971
7.5L (V-8 460)		✔	✔		REC57-34359	912714
888 V-8 427		✔		✔	REC966382	
2.3L		✔		✔	REC966382	912509
"4" 140		✔	✔		REC966382	912509
2.5L, 3.0L 181		✔		✔	REC57-36356	910343
2.5L (1982-87)			✔	✔	REC3852106	311606
3.0L 181 (1982-89)			✔		REC829207	909971
		✔		✔	REC57-48122Q	3852504
3.8L (V-6 229)		✔		✔	REC3852106	311606
4.3L (V-6 262)						
3.8L (V-6 229) (1982-86)		✔	✔		REC3852464	3852464
4.3L (V-6 262) (1982-89)		Salada | Sea Salata | Salée			GDY15386	910414
		✔		✔	REC3852464	3852464
5.0L (V-8 305)		✔	✔	✔	REC57-48122Q	3852504
5.7L (V-8 350)						
5.0L (V-8 305) (1982-87)		✔	✔		REC3852464	3852464
5.7L (V-8 350) (1982-90)		Salada | Sea Salata | Salée			GDY15386	910414
5.0L (V-8 302)		✔		✔	REC3852106	311606C
5.7L (V-8 351)						
5.0L (V-8 305) (1988)		✔	✔	✔	REC3858462	3858462
5.8L (V-8 351)						
		✔		✔	REC829207	909971
7.5L (V-8 460)	1987	✔	✔		REC57-34359	912714

ACOPLAMIENTOS — COUPLERS — PARASTRAPPI — ACCOUPLEMENTS

REF	OEM	AGUJERO HOLE FUORI TROU	CUBO SALIDA HUB OUTER CUBO CUBE	
REC3853962	3853962	Ø 91 mm	Ø 43 mm	2.5L (1986) 3.0L (1986-90), 4.3L, 5.0L, 5.7L (1986) KX & KWB 7.4L (1990-98), 8.2L (1992-93, 1998)



REF	OEM	AGUJERO HOLE FUORI TROU	CUBO SALIDA HUB OUTER CUBO CUBE	
REC3858437	3853917	Ø 76 mm	Ø 43 mm	4.3L (1986-98), 5.0L (1986-88, 1998), 5.7 (1986-92, 1994, 1996-98)



FUELLES CABLE CAMBIO — SHIFT CABLE BELLOWS — CUFFIE CAMBIO — SOUFFLET CÂBLE CHANGEMENT

REF	OEM	
CEF500506	911826	Cobra 1986-93



FUELLES ESCAPE — EXHAUST BELLOWS — CUFFIE SCARICO — SOUFFLET D'ÉCHAPPEMENT

REF	OEM	
REC914036 CEF500527K	914036	Cobra 1986-93



REF	OEM	
REC3863450	3852741	2.5 1986 3.0 1986-91 2.3 1989-90 4.3 1990-91 5.0-5.8 Ford 1991 5.7 1986.



REF	OEM	
REC3852696	3852696	4.3 1991, 5.0-5.8 Ford 1991, 7.5 (460) 1988-89, 5.7LE 1990-91



REF	OEM	
REC3852742	3852742	2.3/4.3/5.0/5.7/5.8L (1989-91) 2.3 1987-88, 4.3 1987-89, 5.0-5.8 Ford 1989-90, 5.7 1986, 5.7 1987-91, 1990-91 (350/454/454HO/460 King, 5.7LE 1990-91.

Manguito inferior
Lower hose
Manicotto inferiore
Soufflet Inférieur



REF	OEM	
REC912374 CEF500521K	912374	7.5 (460) 1987, 5.0-5.8 Ford 1989-90, 5.7 1986, 5.7 1987-1988.

Manguito superior
Upper hose
Manicotto superiore
Soufflet supérieur



FUELLES TRANSON — TRANSON BELLOWS — CUFFIE TRANSON — SOUFFLET TRANSON

REF	OEM	
REC3841481 CEF500514K	3854127	Cobra 1986-98



KIT ENGRANAJES TRANSOM | BALL GEAR KIT TRANSOM | KIT ENGRANAGGIO TRANSOM | KIT PIGNONES TRANSOM

KIT	REF	OEM					
REC22050	REC25-35029	308621	ARO	O-RING	ANELLO	BAGUE	1
	REC908062	908062	TAPA	BALL GEAR COVER	COPERCHIO	COUVERCLE	2
	REC908063	908063	ENGRANAJE	BALL GEAR	INGRANAGGIO	PIGNON	1
	REC908064	908064	TUERCA	NUT	DADO	ÉCROU	2
	REC908069	321467	ENGRANAJE	BALL GEAR	INGRANAGGIO	PIGNON	1
	REC908383	908383	ARO	O-RING	ANELLO	BAGUE	1
	REC981195	981195	RETÉN	OIL SEAL	PARAOLIO	JOINT SPI	2
	REC981196	981196	RETÉN	OIL SEAL	PARAOLIO	JOINT SPI	2



EJES TRANSMISIÓN | DRIVES SHAFTS | ASSE TRASMISSIONE | ARBRE TRANSMISSION

REF	OEM
REC909121	909121



REF	OEM	
REC382883	382883	4 CIL.



REF	OEM	
REC981220	981220	V8 - V6



KIT PIÑONES Y DESPLAZABLES 14:26 | GEAR SETS & CLUTCH DOGS 14:26 | KIT PIGNONI E SELETTORI 14:26 | KIT PIGNONES ET SELECTEURS 14:26

REF	OEM
REC5004218	986980



REF	OEM		
REC337774	912607	3.8L / 229CI V6	1981-85
		4.3L / 262CI V6	1985
		5.0L / 305CI V8	1981-85
		5.7L / 350CI V8	1981-85



KIT PIÑONES Y DESPLAZABLES 13:26 | GEAR SETS & CLUTCH DOGS 13:26 | KIT PIGNONI E SELETTORI 13:26 | KIT PIGNONES ET SELECTEURS 13:26

REF	OEM
REC986979	986979



REF	OEM	
REC323664	910578 323664	4 Cyl. 3.0L (1986-89) 2.3L (1987-90)



CABLE CAMBIO | SHIFT CABLE | CAVO CAMBIO | CÂBLE CHANGEMENT

REF	OEM
REC987661	987661



REF	OEM	
REC987678	985518 986423 987604 987678	KING COBRA



CABLE CAMBIO ELÉCTRICO | ELECTRIC SHIFT CABLE | CAVO CAMBIO ELETTRICO | CÂBLE CHANGEMENT ÉLECTRIQUE

REF	OEM
REC379628	379628



CRUCETAS CARDAN — U-JOINTS — CROCIERA — CARDAN

REF	OEM
REC75832T	912214



REF	OEM
REC915716	915716



REF	OEM
REC3850812	3850812



EJE HÉLICE CAMBIO MECÁNICO — PROP SHAFT MECHANICAL SHIFT — ASSE ELICA CAMBIO MECCANICO — ARBRE HÉLICE CHANGEMENT MECANIQUE

4 CYL	V6-V8	REF	OEM				
✔		REC330137	330137	RETEN ACEITE EJE HELICE	OIL SEAL - PROP SHAFT	PARAOLIO ASSE ELICA	JOINT SPI ARBRE HÉLICE
	✔	REC26-76868	320862	RETEN ACEITE EJE HELICE	OIL SEAL - PROP SHAFT	PARAOLIO ASSE ELICA	JOINT SPI ARBRE HÉLICE
✔		REC379504	379504	COJINETE ACEITE EJE HELICE	BEARING - PROP SHAFT	CUSCINETTO ASSE ELICA	ROULEMENT HUILE ARBRE
	✔	REC387247	387247	COJINETE ACEITE EJE HELICE	BEARING - PROP SHAFT	CUSCINETTO ASSE ELICA	ROULEMENT HUILE ARBRE
✔	✔	REC382407	382407	COJINETE CONTRARROTACIÓN	REVERSE GEAR BEARING CARRIER	CUSCINETTO CONTROROTANTE	ROULEMENT A AIGUILLE
✔	✔	REC314731	314731	TOPE ARANDELA CONTRARROTACIÓN	THRUST WASHER FOR REVERSE GEAR	FERMO CONTROROTANTE	RONDELLE DE CALAGE
✔	✔	REC382408	382408	TOPE COJINETE CONTRARROTACIÓN	THRUST BEARING FOR REVERSE GEAR	FERMO CUSCINETTO CONTROROTANTE	FREIN DE ROULEMENT
✔		REC967344	313446	ARO TÓRICO	O-RING	ANELLO	JOINT TORIQUE
	✔	REC305123	305123	ARO TÓRICO	O-RING	ANELLO	JOINT TORIQUE
✔		REC436888	436888	EJE HÉLICE	PROP SHAFT	ASSE ELICA	ARBRE D'HÉLICE
	✔	REC395209	395209	EJE HÉLICE	PROP SHAFT	ASSE ELICA	ARBRE D'HÉLICE


REC330137


REC26-76868


REC314731


REC382408


REC967344


REC305123


REC379504


REC387247


REC382407


REC436888


REC395209

HERRAMIENTAS COLAS — STERNDRIVES TOOLS — ATTREZZATURA PIEDI — OUTIL D'EMBASES

ALINEACIÓN MOTOR — ENGINE ALIGNMENT TOOL — ALLINEAMENTO MOTORE — OUTIL D'ALIGNEMENT

REF	OEM
REC91-805475A1	912273



SISTEMA DE PROPULSIÓN
PROPULSION SYSTEM
SISTEMA DI PROPULSIONE
SYSTEME DE PROPULSION

HÉLICES ALUMINIO E INOXIDABLE DE 3 Y 4 PALAS
3 & 4 BLADE ALUMINIUM & SS PROPELLERS
ELICHE ALLUMINIO E INOX DA 3 E 4 PALE
HELICE ALUMINIUM ET INOX 3 ET 4 PALES

CÓDIGO DE REFERENCIAS — PART NO. CODING SYSTEM — SISTEMA DI CODICE — CODAGE DES REFERENCES

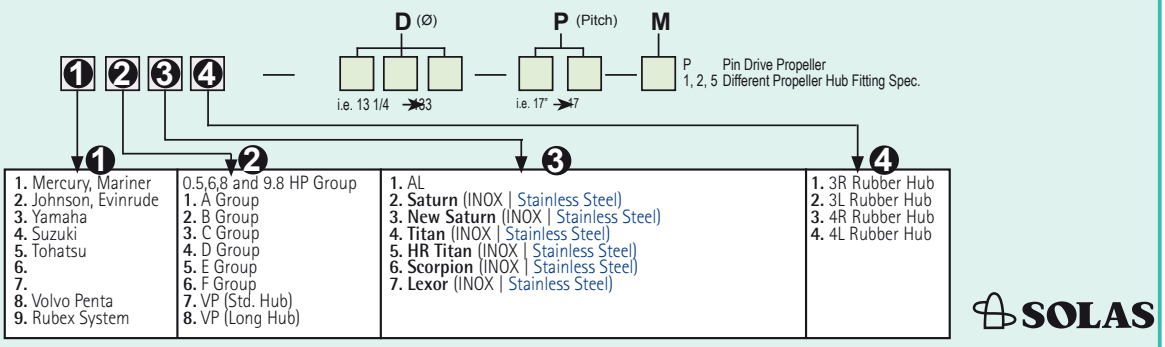

SOLAS

AMITA 3

SOLAS

Hélice de aluminio con núcleo de goma de gran resistencia.

Aluminum propeller with heavy duty rubber hub.

Eliche di alluminio con mozzi in gomma ad alta resistenza.

Hélice en aluminium avec moyeu en caoutchouc



AMITA 3 PLUS

SOLAS

Diseño de pala grande para un área más grande.

High camber blade and large blade area design.

Con un'area più ampia nelle pale.

Conception d'une grande pale pour une plus grande surface de poussée.



HR TITAN 3 PROP

SOLAS

Hélice de acero inoxidable. Alto rendimiento para cascos de alta velocidad. La inclinación de la hoja proporciona un excelente elevación de proa y aceleración. El diseño de copa grande aumenta la mordida y reduce el deslizamiento.

Stainless steel propeller. Performance prop for high speed planning hulls. High rake blade design provides excellent bow lift and acceleration. Heavy cup design increases bite and reduces slip.

Eliche in acciaio inox. Alte prestazioni per scafi ad alta velocità. Il passo della pala fornisce un'eccellente spinta e accelerazione. Il disegno aumenta le prestazioni.

Hélice en acier inoxydable. Hélice de performance pour les coques planantes à grande vitesse. La conception de la pale à haut râteau offre une excellente portance et accélération. La conception des grandes pales augmente l'attaque et réduit le glissement.



NEW SATURN

SOLAS

Hélices de acero inoxidable. Ofrece buena aceleración y rendimiento. Tamaño más pequeño que ofrece un diámetro extragrande.

Stainless steel propeller. Offers good acceleration & all-round performance. Smaller pitch sizes offered in extra large diameter with increased blade area.

Eliche di acciaio inox. Buona accelerazione. Piccole dimensione che offre un più grande diametro.

Hélice inox, offrant de bonnes accélérations et performances. Taille de pas reduite pour les modèles de grands diamètres avec une surface de pale plus importante.



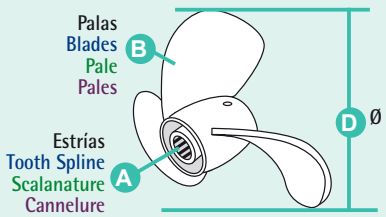

P Paso
Pitch
Passo
Pas

R Rotación L (izquierda) R (derecha)
Rotation L (left) R (Right)
Rotazione L (SX) R (DX)
Rotation L (gauche) R (droit)

OMC

RECAMBIOS MARINOS

GUÍA DE HÉLICES CON NÚCLEO INTEGRADO — PROPELLERS APPLICATION WITH RUBBER HUB — GUIDA ELICHE CON MOZZO — GUIDE DES HELICES AVEC MOYEUX

	OEM	A	B	D	P	R		AL AMITA 3	AL AMITA 4	INOX STAINLESS STEEL NEW SATURN	INOX STAINLESS STEEL HR TITAN 3
MOD 400 2,3 L - 3,0 L COBRA 2,3 L - 3,0 L	382761			14	11	R		SOL2411-140-11			
	765181			13 3/4	13	R		SOL2411-138-13	SOL2413-133-13		
	765182		3	13 1/2	15	R	AL	SOL2411-135-15	SOL2413-130-15	SOL2431-135-15	
	765183			13 1/4	17	R		SOL2411-133-17	SOL2413-128-17	SOL2431-133-17	
	765184			13	19	R		SOL2411-130-19	SOL2413-125-19	SOL2431-130-19	
MOD 800 COBRA KING COBRA 3,0 L & 8,2 L	765186	15	3	15 1/4	15	R	AL	SOL2511-150-15	SOL2513-148-15	SOL2531-145-15	
	765186			15 1/4	15	L		SOL2512-150-15	SOL2514-148-15	SOL2532-145-15	
	765187			15	17	R		SOL2511-148-17	SOL2513-145-17	SOL2531-143-17	
	765187			15	17	L		SOL2512-148-17	SOL2514-145-17	SOL2532-143-17	
	765188			14 4/5	19	R		SOL2511-145-19	SOL2513-143-19	SOL2531-140-19	
	765188			14 4/5	19	L		SOL2512-145-19	SOL2514-143-19	SOL2532-140-19	
	391202			14 1/2	21	R		SOL2511-143-21		SOL2531-140-21	
	391202			14 1/2	21	L		SOL2512-143-21		SOL2532-140-21	
	391203			14 1/4	23	R		SOL2511-142-23	SOL2513-140-23	SOL2531-140-23	
	391203			14 1/4	23	L		SOL2512-142-23			
3.0 L 4.3 L 5.0 L 5.7 L 5.8 L 7.4 L	763315	19	3	15	15	R	AL	SOL8611-150-15	SOL8613-148-15		
	3855479-6			15	15	R		SOL8612-150-15	SOL8614-148-15		
	763316			14.8	17	L		SOL8611-148-17	SOL8613-145-17		
	3855480-4			14.8	17	R		SOL8612-148-17	SOL8614-145-17		
	3850301-7			14.5	19	L		SOL8611-145-19	SOL8613-143-19		
	3855481-2			14.5	19	R		SOL8612-145-19	SOL8614-143-19		
	763318			14.3	21	L		SOL8611-143-21	SOL8613-140-21		
SX				14.3	21	R		SOL8612-143-21	SOL8614-140-21		
	763319			14.2	23	L		SOL8611-142-23			
	763304			15	15	R					SOL8651-148-16
	763305			15	15	L					SOL8652-148-16
	763306			15	17	R					SOL8651-148-17
	763307			15	17	L					SOL8652-148-17
	763308			14 1/2	19	R	Inox SS				SOL8651-148-19
	763309			14 1/2	19	L					SOL8652-148-19
	763310			14 1/4	21	R					SOL8651-145-21
	3850322-3			14 1/4	21	L					SOL8652-145-21
	763312			14 1/4	23	R					SOL8651-140-24
	763313			14 1/4	23	L					SOL8652-140-24

GUÍA DE NÚCLEOS — HUB KIT APPLICATION CHART — GUIDA MOZZI — GUIDE MOYEUX

	A	REF	
400 Cobra, (1978-91)	13	SOLRBX-106	D
800 Cobra, King Cobra (1978-90)	15	SOLRBX-101	E
800 Cobra, King Cobra (1991-94),	15	SOLRBX-100	E
Cobra SX, (1994+),	19	SOLRBX-105	E



RUBEX

GUÍA DE HÉLICES AL (NÚCLEO NO INCLUIDO) — PROPELLERS AL CHART (HUB NOT INCLUDED) — GUIDA ELICHE AL (MOZZO NON INCLUSO) — GUIDE HÉLICES AL (MOYAU NO INCLUDE)

D (40-140HP)	B	D	P	R
SOL9411-138-13	3	14	13	R
SOL9411-135-15		14	15	R
SOL9411-133-17		13	17	R
SOL9411-132-19		13	19	R
SOL9413-133-13	4	13,3	13	R
SOL9413-130-15		13	15	R
SOL9413-128-17		12,8	17	R
SOL9413-125-19		13,2	19	R

E (135-300HP)	B	D	P	R
SOL9511-150-15	3	15	15	R
SOL9511-148-17		15	17	R
SOL9511-145-19		15	19	R
SOL9511-143-21		14	21	R
SOL9513-148-15	4	14,8	15	R
SOL9513-145-17		14,5	17	R
SOL9513-143-19		14,3	19	R
SOL9513-140-21		14	21	R

RUBEX



GUÍA DE HÉLICES INOX (NÚCLEO NO INCLUIDO) — PROPELLERS SS CHART (HUB NOT INCLUDED) — GUIDA ELICHE INOX (MOZZO NON INCLUSO) — GUIDE HÉLICES INOX (MOYAU NO INCLUDE)

RUBEX



D (40-140HP) NS3	B	D	P	R
SOL9431-138-13	3	13 3/4	13	R
SOL9432-138-13		13 3/4	13	L
SOL9431-135-15		13 1/2	15	R
SOL9432-135-15		13 1/2	15	L
SOL9431-133-17		13 1/4	17	R
SOL9432-133-17		13 1/4	17	L
SOL9431-130-19		13	19	R
SOL9432-130-19		13	19	L
SOL9431-130-21		13	21	R

E (90-140HP) NS3	B	D	P	R
SOL9531-145-15	3	14 1/2	15	R
SOL9532-145-15		14 1/2	15	L
SOL9531-143-17		14 1/4	17	R
SOL9532-143-17		14 1/4	17	L
SOL9531-140-19		14	19	R
SOL9532-140-19		14	19	L
SOL9531-140-21		14	21	R
SOL9532-140-21		14	21	L
SOL9531-140-23		14	23	R
SOL9532-140-23		14	23	L

E (135-350HP) L3	B	D	P	R
SOL9571-158-15	3	15 3/4	15	R
SOL9572-158-15		15 3/4	15	L
SOL9571-155-17		15 1/2	17	R
SOL9572-155-17		15 1/2	17	L
SOL9571-153-19		15 1/4	19	R
SOL9572-153-19		15 1/4	19	L
SOL9571-150-21		15	21	R
SOL9572-150-21		15	21	L
SOL9571-148-23		14 3/4	23	R
SOL9572-148-23		14 3/4	23	L

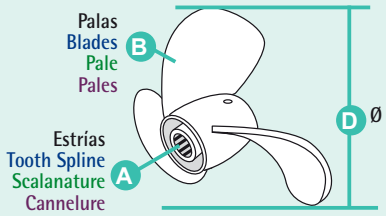

P Paso
Pitch
Passo
Pas

R Rotación L (izquierda) R (derecha)
Rotation L (left) R (Right)
Rotazione L (SX) R (DX)
Rotation L (gauche) R (droit)

CIERRE DE HÉLICE — PROP HARDWARE — CHIUSURA ELICA — CONE D'HÉLICE

STRINGER 800 COBRA V (1978-87)
COBRA & KING COBRA (1992-93)
COBRA, KING & SX (1994+)

TOPE — THRUST WASHER — FERMO — RONDELLE DE FREIN

REF	OEM
REC126870	126870



ESPACIADOR — SPACER — DISTANZIALE — ENTRETOISE

REF	OEM	
REC320570	320570	Stringer 800 Cobra V (1978-87) Cobra & King Cobra (1992-93)
REC3852350	3852350	Cobra, King & SX (1994+)


REC320570

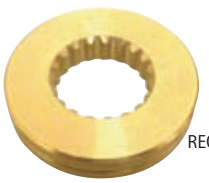
REC3852350

PASADOR — COTTER PIN — CHIAVISTELLI — GOUPILLE FENDUE

REF	OEM
REC3852056	306394



KITS

REF	OEM	
REC175266	175266	Stringer 800 Cobra V (1978-87) Cobra & King Cobra (1992-93)



REF	OEM
REC398042	5008966



REF	OEM	
REC414153	434153	Stringer 800 Cobra V (1978-87) Cobra & King Cobra (1992-93)



REF		
REC22188	REC3852350 + REC398042	Cobra, King & SX (1994+)



STRINGER 400 DRIVES
COBRA 4 CIL (1978-89)
COBRA 2.3L (1990)

TOPE | THRUST WASHER | FERMO | RONDELLE DE FREIN

REF	OEM
REC127084	127084

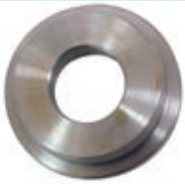

ESPACIADOR | SPACER | DISTANZIALE | ENTRETOISE

REF	OEM
REC315810	315810



PASADOR | COTTER PIN | CHIAVISTELLI | GOUPILLE FENDUE

REF	OEM
REC314502	314502



TUERCA | NUT | DADO | ÉCROU

REF	OEM
REC314503	314503



KITS

REF	OEM
REC175267	175267



REF	OEM
REC5005034	5005034



REF --> OEM

REF	OEM	
A		
Amita 3		696
Amita 3 PLUS		696
ARC6211	983318	634
ARCVR-404	383440	632
B		
BA1-312148	312148	670
BA1-380446	380446	661
BA1-908719	908716	670
BA1-910280	910280	661
BA1-910384	910384	662-663
BAOMC-1-980959	980959	669
BAOMC1-3852347	3852347	667
BAOMC1-907885	907885	661-662-663
BAOMC1-981462	981462	661
BAOMC1-982657	982657	662
BAOMC1-984054	984054	663
BAOMC20-908014	908014	662
BAOMC20-910380	3850799	662-663
BAOMC20-980536	980536	661
BAOMC20-980617	980617	669
BAOMC20-981281	981281	669
BAOMC29-314810	314810	637
BAOMC29-314810	982201	637
BAOMC29-908216	908216	637
BAOMC29-910303	3854254	637
BAOMC47-311130	311130	670
BAOMC47-908935	908935	670
BRA125-1/2x1/2		622
BRA125-1/2x3/4		622
BRA125-1/2x3/8		622
BRA125-1/4x1/2		622
BRA125-1/4X3/8		622
BRA125-1x3/4		622
BRA125-3/16x1/4		622
BRA125-3/4x3/4		622
BRA125-3/8x1/2		622
BRA125-3/8x3/8		622
BRA125-5/16x3/8		622
BRA125-5/8x3/4		622
BRA125-5/8x3/8		622
C		
CEF500317	777128	675
CEF500506	911826	686-693
CEF500514K	3854127	686-693
CEF500521K	912374	693
CEF500527K	914036	686-693
CHARS12YC		639
CHARS9YC		639
CHARV15YC4		639
CM3855411	3855411	681
CM393023	436745	673-677-685
CM393023A	436745	673
CM431708	431708	673-679-685
CM431708A	431708	673
CM983494	983494	685
CM984513	3853818	677
CMC		673
CMCC		673
F		
FEL17049		656
FEL17060		647-652-658-659
FEL17068		655-660
FEL17124		651
FEL17145		654-657
FEL17146		652
FEL17160		647-658
FEL17161		647-658
FEL17165		652-659
FEL17166		652-659
FEL17168		655-660
FEL17169		655-660
FEL17205		654
FEL17244		653
FEL17245		653
FEL17260		647-652-658-659
FEL17261		647-652-658-659
FEL17268		655-660
FEL17342		657
FEL17360		647-652-658-659
FEL17368		655-660
FEL17460	913393	669
FEL17460	3852455	667
FEL17468		655-660
FEL17725		649-650-651
FEL17746		647-659
FEL17936		655
FEL17945	835096	648-652-659-660
FEL17946	3852687	648-652-660
FEL17947		656-660
FEL17983		649-651
FEL17985		657
FEL17994		656-660
FEL17995		647-658
FEL17996		652-659
FEL17997		647-658
FEL17998		652-659
G		
GDY15386	910414	692-692
GDY17335		691
GS30430		622
GS30431		622
GS30432		622
GS30433		622
GS31055		620-622
GS31056		620-622
GS31065		620
GS31066	22-89771Q2	620-622
GS31067		620
GS31157		620
GS35031		623
GS35032		623
GS35049		622
GS35050		622
GS35051		622
GS35052		622
GS35053		622
GS35054		622
GS35055		622
GS38320	3852604	661-662-663-664-665-666-667-668
GS38322	984387	665
GS38322	3853860	664-666-667-668
H		
HGE3394	914766	669
HGE5470	985470	637
HGE6041	986041	669
HOT20244-MK		665-666
HOT20903	912442	665
HOT20921	909863	665-669
HR TITAN 3 PROP		696
L		
LENS3213	35-809097	620
LENS3227	35-886638	620
LENS3240		620
M		
MAR061	3857944	664-666-668
MAR499	3847499	664
MAR501	3857723	666
MP0180-001	10-812509184	632
MP426422	772846	625-628
MP426422	3854087	625
N		
New Saturn		696
NGKTR5		639
NGKUR4		639
P		
PAGB/T848-6	305981	677-684
R		
RAC1/2F-1/2M		622
RAC1/2X16		622
RAC1/2X18		622
RAC1/2X20		622
RAC120R-RAC-01		620
RAC3/8F-3/8M		622
RAC3/8X10		622
RAC3/8X12		622
RAC3/8X14		622
RAC320R-INOX-01		620
RAC320R-RAC-01		620
RAC320R-RAC-02	35-802893Q4	619-620
RACRK19492UL		623
RACRK20726		623
RACRK22628		623
RACS3213	35-809097	620
RACS3214	35-809099	620
RACS3220UL	35-809101	619-620
RACS3227	35-886638	620
RACS3228UL	173233	621
RACS3228UL	502901	621
RACS3228UL		620
RACS3240		620
REC0393988	391264	634
REC0393988	393259	634
REC0393988	393988	634
REC0393988	394176	634
REC0393988	983019	634
REC0393988	985237	634
REC0584107	387277	634
REC0584107	582048	634
REC0584107	582155	634
REC0586180	345419	633
REC0586180	383622	633
REC0586180	582708	633
REC0586180	586180	633
REC0979774	979774	633
REC0982706	982058	634
REC0982706	982706	634
REC0984536	984536	631
REC0984536	988013	631
REC0984628	984628	631
REC0985964	985964	633
REC0987883	3854194	631
REC10-20518	912304	686
REC10-37612	3853155	667
REC10-37612	3853326	668
REC10-79953Q04	307551	687
REC10-861788	10-861788	632
REC11-35921	314730	677-685
REC11-8267089	121731	677-685-686
REC11-862903	552938	661-662-663
REC12-191833	311598	688
REC123018	123018	675
REC125017	302540	683-687-688-690
REC12532	382133	640
REC126870	126870	679-681-685-698
REC127084	127084	685-699
REC13-35048	120177	661-662-663-664-666-667-668
REC13-35048	309336	665
REC13-39107	306325	665
REC13-39107	306470	661-662-663
REC13037	1114356	633
REC13430		636
REC1347-816373A4	981359	625-628
REC1347-816373A4	981428	625-628
REC1347-816373A4	981564	625-628
REC1347-816373A4	981705	625-628
REC1347-816373A4	981803	625-628
REC1347-816373A4	982215	625-628
REC1347-816373A4	982223	625-628
REC1347-816373A4	983855	625-628
REC1347-816373A4	985822	625-628
REC1347-818619R02	98053	628
REC1347-818619R02	381494	628
REC1347-818619R02	381498	624
REC1347-818619R02	382733	624-628
REC1347-818619R02	772831	624-628
REC1347-818619R02	979821	628
REC1347-818619R02	980530	624
REC1347-818619R02	982217	624
REC1347-818619R02	984180	624-628
REC1347-9661A3	382821	625-628
REC1347-9661A3	383766	625-628
REC1347-9661A3	384194	625-628
REC1396-4656	982537	626
REC1396-4656	982538	626
REC1396-4656		629
REC1396-5238	982539	626-629
REC1397-2060	381389	628-629
REC1397-2150	983870	621
REC1397-3327	383087	628
REC1397-3327	983871	628-629
REC1397-5831	508452	626
REC1397-6367A1	508459	626
REC1398-3089		629
REC1463-9382	3853548	638
REC15-401		639
REC15-405	503748	639
REC15-601	503750	639
REC15-602	503748	639
REC15-604		639
REC15-801	503752	639
REC15-801	503755	639
REC15-801		639
REC15-805	503753	639
REC15-806	503751	639
REC15-806	503752	639
REC15-806	503754	639
REC15-806	503755	639
REC15-811	503752	639
REC15-811	503755	639
REC16-56826	120177	662
REC16-56826	3852093	661-663
REC16-70236	314616	663
REC160084	160084	679-685
REC17000	908611	644-645
REC17000	3853336	644-645
REC17010	3854299	646
REC17020	3853380	648
REC17030	3853380	649-650
REC17040		653
REC17042		653
REC17048		656
REC17100		644-645

REF	OEM	
REC17102		645
REC17110		646
REC17115		646
REC17116		646
REC17120		648-649-651
REC17125		648-651
REC17140		654-656
REC17146		652-654-657
REC17177A1	17177A1	640
REC17200		644-645
FEL17205		653
REC17207		656
REC17210		646
REC17211		646
REC17214		650
REC17220		648
REC17224		648
REC17230		649-650
REC17232		650
REC17240		653
REC17241		653
REC17242		653
REC17243		654
REC17248		656
REC17310	857177	646
REC17320	856365	648-650-651
REC17340		654
REC17341		654-657
REC17342		654
REC175266	175266	699
REC175267	175267	699
REC17900	3852693	645
REC17903	3856443	645
REC17920	3854300	647
REC17921	3854942	647
REC17930	835096	649-650-651
REC17931	3852687	649-651
REC17935	856626	655-657
REC17937	3853513	655-657
REC17950	3853343	645
REC17970		646
REC17971	3852655	646
REC17980	855729	649-650-651
REC17981		649-651
REC17982	3856138	649-651
REC17986		657
REC18-8553		665
REC183247	3850853	680
REC195141		640
REC21533394	987438	627
REC21533394	987440	627
REC21533394	987485	627
REC21533394	21533394	627
REC21533394		629
REC22-428611	315713	664-665-666-667-668
REC22-67892A05	318544	677
REC22-67892A05	318544	685
REC22-67892A05	3854539	681
REC22-67892A05	318544	683
REC22-73379		664-666-667-668
REC22050		694
REC22188		699
REC24950	35-60494A4	619
REC25-38933	321117	690
REC25-25439	3852565	675-680-690
REC25-29845	308624	690
REC25-30224	310327	690
REC25-30224	910582	683-690
REC25-30224	310327	683
REC25-30613	310585	689-690
REC25-30613	310967	690
REC25-33145	302337	686-687-690
REC25-35027	303360	690
REC25-35029	308621	683-690-694
REC25-38933	307853	690
REC25-38933	322598	690
REC25-457101	308626	687-690
REC25-48171	202893	686-690
REC25-62702	303191	690
REC25-62705	311338	690
REC25-70937	911686	675-690
REC25-80863	307082	690
REC25000		619
REC25010		619
REC25020		619
REC25030		619
REC26-14756		655-657
REC26-419533	313392	690
REC26-419533	764337	687
REC26-69188	321453	690
REC26-76868	3286	690
REC26-76868	320862	685-690-695
REC26-76868		691
REC26900		643

REF	OEM	
REC26901		643
REC26905		643
REC26905		643
REC26904		643
REC27-33395	856034	648
REC27-33395	3852468	665-666
REC27-46820	3852472	654-657-668
REC27-52546	311068	661-662
REC27-53354	908079	663-645
REC27-8079821	909758	625
REC27-8146801	311069	689
REC27-8146801	3789161GM	689
REC27-815528	3853256	645
REC27-96429		645
REC27-99757	3853412	646-664
REC29-47270	318972	690
REC30-879194A01	3853807	686
REC300-00879	3852217	638
REC301877	301877	690
REC301877	326956	690
REC301877	326959	690
REC301967	301967	690
REC302537	302537	690
REC302564	302564	690
REC302588	302588	690
REC303345	303345	690
REC303347	303347	690
REC304027	304027	677
REC304174	304174	686-690
REC305123	305123	685-690-695
REC305242	305242	690
REC305282	305282	683
REC306376	306376	685
REC307450	307450	690
REC308590	308590	683
REC308592	308592	683
REC308627	308627	690
REC308768	308768	683
REC308799	308799	687-688
REC308825	308825	677-686
REC308876	308876	690
REC308928	308924	683
REC309731	309731	690
REC309731	911871	686-690
REC309989	309989	690
REC31-35990A1	983891	675
REC31-66668A1	3854249	681
REC31-86748A1	3854250	681-687
REC310414	310141	690
REC310414	310414	690
REC310584	310584	689-690
REC310599	310599	690
REC310649	310649	684-690
REC311121	311121	661-662-663
REC313080	313080	687
REC313080	982946	688
REC313163	313163	683
REC313164	313164	683
REC313167	313167	683
REC313175	313175	675-683-690
REC313176	313176	683-689
REC313194	313193	683
REC313194	313194	683
REC313195	313195	683
REC313196	313196	683
REC313197	313197	683
REC313198	313198	683
REC313199	313199	683
REC313200	313200	683
REC313202	313202	683
REC313203	313203	683
REC313204	313204	683
REC313205	313205	683
REC313206	313206	683
REC313244	313244	687
REC313282	313282	690
REC313284	313284	690
REC313340	31340	690
REC313340	313340	690
REC313353	313353	685-690
REC313386	313368	689
REC313446	313446	685
REC313448	313448	679-685
REC313448	320145	685
REC313715	313715	679-685
REC313754	313754	690
REC314167	314167	690
REC314491	314491	683-689-690
REC314502	314502	685-699
REC314503	314503	699
REC314503	5008966	685
REC314728	314728	677-690
REC314728	314728	684
REC314731	314731	679-685-695
REC314745	314745	677-684

REF	OEM	
REC315055	315055	625-661-662-663
REC315189	315189	683-687-689
REC315810	315810	685-699
REC317624	317624	677-684
REC317624	552940	661-662-663
REC318372	318372	677-690
REC318717	318717	677-690
REC318972	318972	690
REC319085	319085	690
REC32-33189	312781	671
REC32-8M0071007	509282	671
REC320140	320140	690
REC320570	320570	679-685-698
REC320635	5004941	684
REC321459	321459	690
REC321466	321466	690
REC321467	321467	684-687-688-690
REC321480	321480	690
REC321481	321481	690
REC321786	321786	690
REC321787	321787	690
REC321788	321788	690
REC321831	321831	690
REC321895	321895	690
REC321928	321928	690
REC322938	322938	679-685
REC322941	322941	679-685
REC323338	316499	687
REC323361	323361	677-684
REC323362	323362	677-684
REC323664	323664	685-694
REC323664	910578	695
REC324369	324369	679-685
REC324639	324639	690
REC324670	352165	685
REC324766	324766	679-685
REC326649	326649	690
REC326649	329380	690
REC326649	909047	690
REC326741	326741	690
REC326849	326849	690
REC327031	327031	690
REC327656	327656	677-684
REC327669	327669	679-685
REC328096	328096	677-685
REC328694	3852473	683
REC328702	306358	685
REC328825	328825	679-685
REC329922	329922	690
REC329923	329923	690
REC330137	330137	679-685-690-691-695
REC330265	330265	677-685
REC330327	330327	690
REC331103	331103	690
REC331188	322501	686-690
REC331880	331880	679-685
REC331999	331999	677-685
REC332261	332261	690
REC332583	305739	690
REC332583	317178	690
REC332583	332583	690
REC332583	332584	690
REC332583	911311	686-690
REC333572	333572	690
REC333957	333957	679-685
REC334163	334163	679
REC334163	982422	685
REC334950	334950	679-690
REC336565	336565	679
REC33662	380537	641
REC33700	380543	642
REC337061	337061	677-685
REC33708	383587	641
REC33765T	980152	640
REC337774	337774	685
REC337774	912607	694
REC337778	337778	677-685
REC338484	324701	689
REC338484	338484	689
REC338484	910338	685-689
REC338518	338518	690
REC338522	338522	690
REC339543	339543	690
REC339620	339620	690
REC341280	341280	690
REC341281	314218	690
REC341281	314281	690
REC34235T	380538	642
REC3423A1		642
REC342786	332205	690
REC35-03752		630
REC35-06003	778864	621
REC35-06004	173834	621

REF	OEM	
REC35-06004	502903	621
REC35-06007	502900	621
REC35-49088A2	312456	621
REC35-49088A2	381690	621
REC35-53336	908034	621
REC35-8M0061975	174144	619
REC35-8M0061975	502905	619
REC350271	350271	679-685
REC3517857	174796	621
REC3517857	502904	621
REC353076	353076	690
REC3589522	3852561	675-680
REC3589524	3852562	675-680
REC375761	375761	683
REC379504	379504	679-685-695
REC379585	379585	683
REC379628	379628	694
REC3808228	3852544	686
REC382138	986280	634
REC382138	3853945	634
REC382165	382165	683
REC382212	382212	683
REC382407	382407	679-685-695
REC382408	382408	679-685-695
REC382883	382883	683-694
REC3841481	3854127	686-693
REC384195	384195	677-684
REC3850360	986292	637
REC3850360	987716	637
REC3850360	3850360	637
REC3850396	3850396	630
REC385043	385043	679-685
REC3850495	3850495	662-663
REC3850594		674
REC3850812	3850812	675-680-695
REC3850814	3850814	680
REC3850852	3850852	680
REC3850942	3850942	681
REC3851411	3855411	672
REC3852045	303067	675-680-690
REC3852045	329381	690
REC3852045	909747	690
REC3852056	306394	679-681-685-698
REC3852106	311606	691-692
REC3852106	311606C	692
REC3852142	306422	661-662-663
REC3852165	910953	680
REC3852272	3852272	680-690
REC3852279	3852279	680
REC3852315	3852315	681
REC3852317	3852317	680
REC3852350	3852350	681-698
REC3852352	911830	686
REC3852454	908668	675-680
REC3852455	3852455	647-652-658-659-667-669
REC3852464	3852464	691-692
REC3852467	3852467	664-665-666
REC3852476	909829	670
REC3852476	3852476	667-670
REC3852535	911718	686-690
REC3852538	3852538	664-666-668
REC3852548	3852548	686-691
REC3852550	3852550	686
REC3852560	3852560	680-689
REC3852568	3852568	675-680
REC3852602	912627	667
REC3852696	3852696	664-666-667-668-693
REC3852742	3852742	665-693
REC3852830	3852830	664-666-667-668
REC3852865	3852865	681
REC3852866	3852866	681
REC3852928	305270	690
REC3852959	3852959	681
REC3853283	3853283	625
REC3853341		648-649-650-651
REC3853434	3853434	667
REC3853655	3853655	675-690-691
REC3853796	982517	671
REC3853796	3471293	671
REC3853799	3853799	636
REC3853801	3853801	642
REC3853839	982187	633
REC3853839	985063	633
REC3853854	3853854	635
REC3853855	3853855	635
REC3853856	3853856	635
REC3853857	3853857	635
REC3853934	3853934	681
REC3853945	986280	634
REC3853945	3853945	634
REC3853983		636

REF	OEM	
REC3854001	986642	640
REC3854001	3854001	640
REC3854002	3854002	638
REC3854003	986650	640
REC3854003	3854003	640
REC3854020	986796	627
REC3854020	3854020	627
REC3854020	3854347	627
REC3854020		629
REC3854105	987313	627
REC3854105	3854105	627
REC3854105		629
REC3854159	3854159	630
REC3854161	3854161	638
REC3854190	987811	632
REC3854190	3854190	632
REC3854217	3854217	640
REC3854260	3854260	641
REC3854261	3854261	642
REC3854311		642
REC3854331	3854331	641
REC3854548	3854548	641
REC3854549		642
REC3854595	3854595	681
REC3855081	311598	677
REC3855081	311598	683
REC3855081	311598	685
REC3855081	311598	687
REC3855081	311598	688
REC3855081	333572	680
REC3855081	333572	681
REC3855269	3855269	667
REC3855271	3855271	667
REC3855275		681
REC3855276	981650	624
REC3857533	3857533	633
REC3857675	3857675	681
REC3858261	3854620	624
REC3858261	3857986	624
REC3858261	3858261	624
REC3858437	3853917	693
REC3858462	311046	691
REC3858462	3858462	692
REC3860769	985964	633
REC3860769	986008	633
REC3860842	3860842	680
REC3862228		619
REC3862500	3862500	664-666
REC3863090	3863090	681
REC3863191	351325	664
REC3863191	913784	670
REC3863191	3863191	665-666-667-668
REC3863450	3852741	663-664-666-667-668-693
REC3863193AL	3855411	672
REC387247	387247	679-685-695
REC387656	387656	677-684
REC387817	387817	677-684
REC3885317		632
REC389039	389039	679-685
REC389042	389042	679-685
REC389455	389455	679-685
REC391-5090	382135	642
REC391-5090Q1		643
REC392-6316		640
REC392-6324Q1		643
REC392-6325Q1		643
REC392-6330	985764	640
REC392-9086T	3853814	641
REC392-9766	3853815	641
REC393-9459Q1	380541	640
REC393831	912213	675-680
REC395209	395209	679-685-695
REC39631		680
REC397768	397768	672
REC397768AL	397768	672
REC398042	398042	685
REC398042	5008966	699
REC398042	5008966	679-681
REC41400		630
REC414153	434153	699
REC431708	431708	672
REC431708AL	431708	672
REC43436	915918	686
REC434467	434467	679
REC436745	436745	672
REC436745AL	436745	672
REC436888	436888	679-685-695
REC439967	439967	678
REC439967	984458	678
REC46-8M0113733	3858340	671
REC46-8M0113734	985429	671
REC46-8M0113734	3853850	671
REC46-8M0113735	3855991	671
REC46335	908700	665

REF	OEM	
REC46335	3853404	664-666-667
REC479956		664-666-668
REC50-806965A4	988217	632
REC50-808011A05	981288	631
REC50-808011A05	984982	631
REC50-863007A1	3860566	632
REC50-97499A2	981289	631
REC50-97499A2	982202	631
REC50-99417A2	981078	631
REC50-99417A2	982121	631
REC50-99417A2	988217	631
REC50-99418A2	3860566	632
REC5000074	5000074	679-685
REC5004218	986980	677-679-694
REC5004257	5004257	679
REC5004765	5004765	679
REC5005034	5005034	699
REC502900	502900	621
REC53773		664
REC54-815504320	3853786	665
REC553126	553126	683-690
REC57-34359	912714	692
REC57-36356	910343	692
REC57-48122Q	3852504	692
REC57-78200Q1	3852504	693
REC57-96834Q	912714	692
REC58217	384735	642
REC59830A7	912212	675-680
REC62092T	982063	624
REC69729	988247	633
REC70720		623
REC75832T	912214	675-695
REC763891	763891	666
REC764197	764197	675
REC764799	764799	665-670
REC767970	305987	690
REC777128	777128	675
REC801766		642
REC802385	911702	675
REC806490T	3853787	630
REC823426A1	383918	626
REC823426A1	384743	626
REC823426A1	979659	626
REC823426A1	983864	626
REC823426A1		629
REC823427A1	982384	626-627-629
REC829207	310953	691
REC829207	909971	692-693
REC834975	980892	642
REC835702	982336	641
REC841243	982342	642
REC841994	983073	626
REC841994	984487	626
REC841994		629
REC853868	853858	680
REC853868	3853858	690
REC854040	3854402	681
REC86234A4	982240	624
REC86234A4	985602	624
REC86234A4	985603	624
REC87654		674
REC87660		687-688
REC87670		687-688
REC878982		670
REC879031	983218	689
REC89825302	982211	642
REC8M0068784	3857532	630
REC8M0125617	3855184	630
REC8M6001217	382125	641
REC8M6001217	382136	641
REC8M6001219	980893	642
REC8M6001219	987136	642
REC8M6001219	987894	642
REC8M6001249	987895	641
REC907761	907761	661-662-663
REC907764	907764	661
REC907774	907774	683-689
REC907866	907866	683
REC908062	908062	683-687-694
REC908063	908063	687-694
REC908064	908064	694
REC908064	908064	683-687
REC908069	321467	694
REC908069	908069	683
REC908087	908087	683-689
REC908158	908158	679-685-686
REC908194	908194	690
REC908194	908194	687-688
REC908383	908383	687-690-694
REC908765	908765	625
REC908855	908855	687-690
REC909048	909048	683-690
REC909121	909121	683-694
REC909123	909123	683
REC909139	909139	683-690

REF	OEM	
REC909140	909140	683-690
REC909232	909232	662-663-665
REC909316	909316	675-690
REC909368	909368	661
REC909371	909371	661-662-663-665
REC909515	909515	687
REC909527	909527	687-688
REC909604	909604	685
REC909610	909610	665
REC909753	909753	683-689
REC91-805475A1	912273	695
REC910236	910236	685
REC910238	910238	683-689-690
REC910240	910240	683
REC910310	910310	685
REC910389	910389	662
REC911019	911019	688-690
REC911668	911668	675
REC911678	911678	675
REC911679	911679	675
REC911680	911680	675
REC911681	911681	675
REC911685	911685	675-690
REC911693	911693	677
REC911697	911697	675
REC911698	911698	675
REC911699	911699	675
REC911700	911700	675-690
REC911703	911703	675
REC911704	911704	675
REC911705	911705	677
REC911715	911715	677
REC911750	911750	675
REC911751	911751	675
REC911753	911753	675
REC911878	911878	677
REC911937	911937	675
REC911962	385367	679
REC911962	911962	685
REC912127	912127	677-685
REC912157	912157	677
REC912238	912238	675
REC912374	912374	665-693
REC912614	912614	675
REC913393	913393	658-669
REC914036	914036	686-693
REC914488	914488	675
REC915716	915716	695
REC915719	915719	677
REC915720	915720	677
REC915840	915840	675-686-688
REC915954	915954	679
REC925093	320303	690
REC925093	925093	680
REC966382	912509	691-692
REC967344	313446	679-690-695
REC967344	3852308	680
REC97258A1	171960	630
REC976669	976669	672
REC976669AL	976669	672
REC980183	980183	687
REC981195	981195	687-690-694
REC981196	981196	683-690-694
REC981220	981220	683-694
REC981268	981268	683-690
REC981797	981797	688
REC981799		682
REC981801	981801	688
REC981911	981911	621
REC982209	982209	641
REC982230	982230	621
REC982386	381400	626
REC982386	982386	626
REC982386		629
REC982422	982422	684
REC982438	982438	672
REC982438AL	982438	672
REC982946	982946	688
REC982947	982947	688
REC982949		682
REC982997	982997	624
REC983298	983298	683-689
REC983494	983494	672
REC983494AL	983494	672
REC983825	983825	675
REC983826	983826	675
REC983877	983877	675
REC983878	983878	675
REC983880	983880	675
REC983892	983892	675
REC983952	984547	672
REC983952AL	983952	672
REC983967	983967	675
REC984012	984012	675
REC984264	984264	675

REF	OEM	
REC984461		674
REC984462	984462	677
REC984491	984491	621
REC984744	984744	675
REC985052	985052	627-629
REC985218	985218	641
REC985612	985612	678
REC986158	385930	672
REC986158AL	385930	672
REC986782	986782	627-629
REC986799	986784	627
REC986799	986799	627
REC986799		629
REC986838	986838	677
REC986979	986979	677-679-694
REC987067	3854061	672
REC987067AL	3854061	672
REC987315	987315	627-629
REC987661	987661	686-694
REC987678	985518	694
REC987678	986423	694
REC987678	987604	694
REC987678	987678	686-694
REC987739	982749	643
REC987739	982755	643
REC987739	982774	643
REC987739	984036	643
REC987739	984276	643
REC987739	984281	643
REC987739	984730	643
REC987739	985902	643
REC987739	986342	643
REC987739	986837	643
REC987739	987738	643
REC987739	987739	643
REC987739	987740	643
REC987800	987800	673
REC9D-116		673
RECOBBRACKET		619
RECRA122002		631
RECRK21069		623
RM21610333	3854086	625-628
RM3850470	983939	635
RM3850470	984731	635
RM3850470	3850470	635-686
RM3852516	910953	675
RM3854874	3854874	664
RM3861459	3861459	668
RM3862228	502906	619
RM3862228	987754	619

S

SHEG9901	3858847	637
SHEG9903	3851982	637
SHEG9903	3855079	637
SHEG9903	3857794	637
SOL2411-130-19	765184	697
SOL2411-133-17	765183	697
SOL2411-135-15	765182	697
SOL2411-138-13	765181	697
SOL2411-140-11	382761	697
SOL2413-125-19	765184	697
SOL2413-128-17	765183	697
SOL2413-130-15	765182	697
SOL2413-133-13	765181	697
SOL2431-130-19	765184	697
SOL2431-133-17	765183	697
SOL2431-135-15	765182	697
SOL2511-142-23	391203	697
SOL2511-143-21	391202	697
SOL2511-145-19	765188	697
SOL2511-148-17	765187	697
SOL2511-150-15	765186	697
SOL2512-142-23	391203	697
SOL2512-143-21	391202	697
SOL2512-145-19	765188	697
SOL2512-148-17	765187	697
SOL2512-150-15	765186	697
SOL2513-140-23	391203	697
SOL2513-143-19	765188	697
SOL2513-145-17	765187	697
SOL2513-148-15	765186	697
SOL2514-143-19	765188	697
SOL2514-145-17	765187	697
SOL2514-148-15	765186	697
SOL2531-140-19	765188	697
SOL2531-140-21	391202	697
SOL2531-140-23	391203	697
SOL2531-143-17	765187	697
SOL2531-145-15	765186	697
SOL2532-140-19	765188	697
SOL2532-140-21	391202	697
SOL2532-143-17	765187	697
SOL2532-145-15	765186	697
SOL8611-142-23	763319	697
SOL8611-143-21	763318	697

REF	OEM	
SOL8611-145-19	3850301-7	697
SOL8611-148-17	763316	697
SOL8611-150-15	763315	697
SOL8612-143-21		697
SOL8612-145-19	3855481-2	697
SOL8612-148-17	3855480-4	697
SOL8612-150-15	3855479-6	697
SOL8613-140-21	763318	697
SOL8613-143-19	3850301-7	697
SOL8613-145-17	763316	697
SOL8613-148-15	763315	697
SOL8614-140-21		697
SOL8614-143-19	3855481-2	697
SOL8614-145-17	3855480-4	697
SOL8614-148-15	3855479-6	697
SOL8651-140-24	763312	697
SOL8651-145-21	763310	697
SOL8651-148-16	763304	697
SOL8651-148-17	763306	697
SOL8651-148-19	763308	697
SOL8652-140-24	763313	697
SOL8652-145-21	3850322-3	697
SOL8652-148-16	763305	697
SOL8652-148-17	763307	697
SOL8652-148-19	763309	697
SOL9411-132-19		697
SOL9411-133-17		697
SOL9411-135-15		697
SOL9411-138-13		697
SOL9413-125-19		697
SOL9413-128-17		697
SOL9413-130-15		697
SOL9413-133-13		697
SOL9431-130-19		698
SOL9431-130-21		698
SOL9431-133-17		698
SOL9431-135-15		698
SOL9431-138-13		698
SOL9432-130-19		698
SOL9432-133-17		698
SOL9432-135-15		698
SOL9432-138-13		698
SOL9511-143-21		697
SOL9511-145-19		697
SOL9511-148-17		697
SOL9511-150-15		697
SOL9513-140-21		697
SOL9513-143-19		697
SOL9513-145-17		697
SOL9513-148-15		697
SOL9531-140-19		698
SOL9531-140-21		698
SOL9531-140-23		698
SOL9531-143-17		698
SOL9531-145-15		698
SOL9532-140-19		698
SOL9532-140-21		698
SOL9532-140-23		698
SOL9532-143-17		698
SOL9532-145-15		698
SOL9571-148-23		698
SOL9571-150-21		698
SOL9571-153-19		698
SOL9571-155-17		698
SOL9571-158-15		698
SOL9572-148-23		698
SOL9572-150-21		698
SOL9572-153-19		698
SOL9572-155-17		698
SOL9572-158-15		698
SOLRBX-100		697
SOLRBX-101		697
SOLRBX-105		697
SOLRBX-106		697

T

TRI305-0386		623
TRI305-0566		623

OEM --> REF

OEM	REF	
3286	REC26-76868	690
31340	REC313340	690
98053	REC1347-818619R02	628
120177	REC13-35048	661-662-663-664-666-667-668
120177	REC16-56826	662
121731	REC11-8267089	677-685-686
123018	REC123018	675
126870	REC126870	679-681-685-698
127084	REC127084	685-699
160084	REC160084	679-685
171960	REC97258A1	630
173233	RACS3228UL	621
173834	REC35-06004	621
174144	REC35-8M0061975	619
174796	REC3517857	621
175266	REC175266	699
175267	REC175267	699
202893	REC25-48171	686-690
301877	REC301877	690
301967	REC301967	690
302337	REC25-33145	686-687-690
302537	REC302537	690
302540	REC125017	683-687-688-690
302564	REC302564	690
302588	REC302588	690
303067	REC3852045	675-680-690
303191	REC25-62702	690
303345	REC303345	690
303347	REC303347	690
303360	REC25-35027	690
304027	REC304027	677
304174	REC304174	686-690
305123	REC305123	685-690-695
305242	REC305242	690
305270	REC3852928	690
305282	REC305282	683
305739	REC332583	690
305981	PAGB/T848-6	677-684
305987	REC767970	690
306325	REC13-39107	665
306358	REC328702	685
306376	REC306376	685
306394	REC3852056	679-681-685-698
306422	REC3852142	661-662-663
306470	REC13-39107	661-662-663
307082	REC25-80863	690
307450	REC307450	690
307551	REC10-79953Q04	687
307853	REC25-38933	690
308590	REC308590	683
308592	REC308592	683
308621	REC25-35029	683-690-694
308624	REC25-29845	690
308626	REC25-457101	687-690
308627	REC308627	690
308768	REC308768	683
308799	REC308799	687-688
308825	REC308825	677-686
308876	REC308876	690
308924	REC308928	683
309336	REC13-35048	665
309731	REC309731	690
309989	REC309989	690
310141	REC310414	690
310327	REC25-30224	690
310327	REC25-30224	683
310414	REC310414	690
310584	REC310584	689-690
310585	REC25-30613	689-690
310599	REC310599	690
310649	REC310649	684-690
310953	REC829207	691
310967	REC25-30613	690
311046	REC3858462	692
311068	REC27-52546	661-662
311069	REC27-8146801	689
311121	REC311121	661-662-663
311130	BAOMC47-311130	670
311338	REC25-62705	690
311598	REC12-191833	688
311598	REC3855081	677
311598	REC3855081	683
311598	REC3855081	685
311598	REC3855081	687
311598	REC3855081	688
311606	REC3852106	691-692
312148	BA1-312148	670
312456	REC35-49088A2	621
312781	REC32-33189	671
313080	REC313080	687
313163	REC313163	683
313164	REC313164	683
313167	REC313167	683
313175	REC313175	675-683-690
313176	REC313176	683-689
313193	REC313194	683
313194	REC313194	683
313195	REC313195	683
313196	REC313196	683
313197	REC313197	683
313198	REC313198	683
313199	REC313199	683
313200	REC313200	683
313202	REC313202	683
313203	REC313203	683
313204	REC313204	683
313205	REC313205	683
313206	REC313206	683
313244	REC313244	687
313282	REC313282	690
313284	REC313284	690
313340	REC313340	690
313353	REC313353	685-690
313368	REC313386	689
313392	REC26-419533	690
313446	REC313446	685
313446	REC967344	679-690-695
313448	REC313448	679-685
313715	REC313715	679-685
313754	REC313754	690
314167	REC314167	690
314218	REC341281	690
314281	REC341281	690
314491	REC314491	683-689-690
314502	REC314502	685-699
314503	REC314503	699
314616	REC16-70236	663
314728	REC314728	677-690
314728	REC314728	684
314730	REC11-35921	677-685
314731	REC314731	679-685-695
314745	REC314745	677-684
314810	BAOMC29-314810	637
315055	REC315055	625-661-662-663
315189	REC315189	683-687-689
315713	REC22-428611	664-665-666-667-668
315810	REC315810	685-699
316499	REC323338	687
317178	REC332583	690
317624	REC317624	677-684
318372	REC318372	677-690
318544	REC22-67892A05	677
318544	REC22-67892A05	685
318544	REC22-67892A05	683
318717	REC318717	677-690
318972	REC29-47270	690
318972	REC318972	690
319085	REC319085	690
320140	REC320140	690
320145	REC313448	685
320303	REC925093	690
320570	REC320570	679-685-698
320862	REC26-76868	685-690-695
321117	REC25-38933	690
321453	REC26-69188	690
321459	REC321459	690
321466	REC321466	690
321467	REC321467	684-687-688-690
321467	REC908069	694
321480	REC321480	690
321481	REC321481	690
321786	REC321786	690
321787	REC321787	690
321788	REC321788	690
321831	REC321831	690
321895	REC321895	690
321928	REC321928	690
322501	REC331188	686-690
322598	REC25-38933	690
322938	REC322938	679-685
322941	REC322941	679-685
323361	REC323361	677-684
323362	REC323362	677-684
323664	REC323664	685-694
324369	REC324369	679-685
324639	REC324639	690
324701	REC338484	689
324766	REC324766	679-685
326649	REC326649	690
326741	REC326741	690
326849	REC326849	690
326956	REC301877	690
326959	REC301877	690
327031	REC327031	690
327656	REC327656	677-684
327669	REC327669	679-685
328096	REC328096	677-685
328825	REC328825	679-685
329380	REC326649	690
329381	REC3852045	690
329922	REC329922	690
329923	REC329923	690
330137	REC330137	679-685-690-691-695
330265	REC330265	677-685
330327	REC330327	690
331103	REC331103	690
331880	REC331880	679-685
331999	REC331999	677-685
332205	REC342786	690
332261	REC332261	690
332583	REC332583	690
332584	REC332583	690
333572	REC333572	690
333572	REC3855081	680
333572	REC3855081	681
333957	REC333957	679-685
334163	REC334163	679
334950	REC334950	679-690
336565	REC336565	679
337061	REC337061	677-685
337774	REC337774	685
337778	REC337778	677-685
338484	REC338484	689
338518	REC338518	690
338522	REC338522	690
339543	REC339543	690
339620	REC339620	690
341280	REC341280	690
345419	REC0586180	633
350271	REC350271	679-685
351325	REC3863191	664
352165	REC324670	685
353076	REC353076	690
375761	REC375761	683
379504	REC379504	679-685-695
379585	REC379585	683
379628	REC379628	694
380446	BA1-380446	661
380537	REC33662	641
380538	REC34235T	642
380541	REC393-9459Q1	640
380543	REC33700	642
381389	REC1397-2060	628-629
381400	REC982386	626
381494	REC1347-818619R02	628
381498	REC1347-818619R02	624
381690	REC35-49088A2	621
382125	REC8M6001217	641
382133	REC12532	640
382135	REC391-5090	642
382136	REC8M6001217	641
382165	REC382165	683
382212	REC382212	683
382407	REC382407	679-685-695
382408	REC382408	679-685-695
382733	REC1347-818619R02	624-628
382761	SOL2411-140-11	697
382821	REC1347-9661A3	625-628
382883	REC382883	683-694
383087	REC1397-3327	628
383440	ARCVR-404	632
383587	REC33708	641

OEM	REF	
383622	REC0586180	633
383766	REC1347-9661A3	625-628
383918	REC823426A1	626
384194	REC1347-9661A3	625-628
384195	REC384195	677-684
384735	REC58217	642
384743	REC823426A1	626
385043	REC385043	679-685
385367	REC911962	679
387247	REC387247	679-685-695
387277	REC0584107	634
387656	REC387656	677-684
387817	REC387817	677-684
389039	REC389039	679-685
389042	REC389042	679-685
389455	REC389455	679-685
391202	SOL2511-143-21	697
391202	SOL2512-143-21	697
391202	SOL2531-140-21	697
391202	SOL2532-140-21	697
391203	SOL2511-142-23	697
391203	SOL2512-142-23	697
391203	SOL2513-140-23	697
391203	SOL2531-140-23	697
391264	REC0393988	634
393259	REC0393988	634
393988	REC0393988	634
394176	REC0393988	634
395209	REC395209	679-685-695
397768	REC397768	672
397768	REC397768AL	672
398042	REC398042	685
431708	CM431708	679-685
431708	REC431708	672
431708	REC431708AL	672
434153	REC414153	699
434467	REC434467	679
436745	CM393023	677-685
436745	REC436745	672
436745	REC436745AL	672
436888	REC436888	679-685-695
439967	REC439967	678
502900	REC35-06007	621
502900	REC502900	621
502901	RACS3228UL	621
502903	REC35-06004	621
502904	REC3517857	621
502905	REC35-8M0061975	619
502906	RM3862228	619
503748	REC15-405	639
503748	REC15-602	639
503750	REC15-601	639
503751	REC15-806	639
503752	REC15-801	639
503752	REC15-806	639
503752	REC15-811	639
503753	REC15-805	639
503754	REC15-806	639
503755	REC15-801	639
503755	REC15-806	639
503755	REC15-811	639
508452	REC1397-5831	626
508459	REC1397-6367A1	626
509282	REC32-8M0071007	671
552938	REC11-862903	661-662-663
552940	REC317624	661-662-663
553126	REC553126	683-690
582048	REC0584107	634
582155	REC0584107	634
582708	REC0586180	633
586180	REC0586180	633
763304	SOL8651-148-16	697
763305	SOL8652-148-16	697
763306	SOL8651-148-17	697
763307	SOL8652-148-17	697
763308	SOL8651-148-19	697
763309	SOL8652-148-19	697
763310	SOL8651-145-21	697
763312	SOL8651-140-24	697
763313	SOL8652-140-24	697
763315	SOL8611-150-15	697
763315	SOL8613-148-15	697
763316	SOL8611-148-17	697
763316	SOL8613-145-17	697
763318	SOL8611-143-21	697
763318	SOL8613-140-21	697

OEM	REF	
763319	SOL8611-142-23	697
763891	REC763891	666
764197	REC764197	675
764337	REC26-419533	687
764799	REC764799	665-670
765181	SOL2411-138-13	697
765181	SOL2413-133-13	697
765182	SOL2411-135-15	697
765182	SOL2413-130-15	697
765182	SOL2431-135-15	697
765183	SOL2411-133-17	697
765183	SOL2413-128-17	697
765183	SOL2431-133-17	697
765184	SOL2411-130-19	697
765184	SOL2413-125-19	697
765184	SOL2431-130-19	697
765186	SOL2511-150-15	697
765186	SOL2512-150-15	697
765186	SOL2513-148-15	697
765186	SOL2514-148-15	697
765186	SOL2531-145-15	697
765186	SOL2532-145-15	697
765187	SOL2511-148-17	697
765187	SOL2512-148-17	697
765187	SOL2513-145-17	697
765187	SOL2514-145-17	697
765187	SOL2531-143-17	697
765187	SOL2532-143-17	697
765188	SOL2511-145-19	697
765188	SOL2512-145-19	697
765188	SOL2513-143-19	697
765188	SOL2514-143-19	697
765188	SOL2531-140-19	697
765188	SOL2532-140-19	697
772831	REC1347-818619R02	624-628
772846	MP426422	625-628
777128	CEF500317	675
777128	REC777128	675
778864	REC35-06003	621
835096	FEL17945	648-652-659-660
835096	REC17930	649-650-651
853858	REC853868	680
855729	REC17980	649-650-651
856034	REC27-33395	648
856365	REC17320	648-650-651
856626	REC17935	655-657
857177	REC17310	646
907761	REC907761	661-662-663
907764	REC907764	661
907774	REC907774	683-689
907866	REC907866	683
907885	BAOMC1-907885	661-662-663
908014	BAOMC20-908014	662
908034	REC35-53336	621
908062	REC908062	683-687-694
908063	REC908063	687-694
908064	REC908064	694
908064	REC908064	683-687
908069	REC908069	683
908079	REC27-53354	663-645
908087	REC908087	683-689
908158	REC908158	679-685-686
908194	REC908194	690
908194	REC908194	687-688
908216	BAOMC29-908216	637
908383	REC908383	687-690-694
908611	REC17000	644-645
908668	REC3852454	675-680
908700	REC46335	665
908716	BA1-908719	670
908765	REC908765	625
908855	REC908855	687-690
908935	BAOMC47-908935	670
909047	REC326649	690
909048	REC909048	683-690
909121	REC909121	683-694
909123	REC909123	683
909139	REC909139	683-690
909140	REC909140	683-690
909232	REC909232	662-663-665
909316	REC909316	675-690
909368	REC909368	661
909371	REC909371	661-662-663-665
909515	REC909515	687
909527	REC909527	687-688

OEM	REF	
909604	REC909604	685
909610	REC909610	665
909747	REC3852045	690
909753	REC909753	683-689
909758	REC27-8079821	625
909829	REC3852476	670
909863	HOT20921	665-669
909971	REC829207	692
910236	REC910236	685
910238	REC910238	683-689-690
910240	REC910240	683
910280	BA1-910280	661
910310	REC910310	685
910338	REC338484	685-689
910343	REC57-36356	692
910384	BA1-910384	662-663
910389	REC910389	662
910414	GDY15386	692
910578	REC323664	694
910582	REC25-30224	683-690
910953	REC3852165	680
910953	RM3852516	675
911019	REC911019	688-690
911311	REC332583	686-690
911668	REC911668	675
911678	REC911678	675
911679	REC911679	675
911680	REC911680	675
911681	REC911681	675
911685	REC911685	675-690
911686	REC25-70937	675-690
911693	REC911693	677
911697	REC911697	675
911698	REC911698	675
911699	REC911699	675
911700	REC911700	675-690
911702	REC802385	675
911703	REC911703	675
911704	REC911704	675
911705	REC911705	677
911715	REC911715	677
911718	REC3852535	686-690
911750	REC911750	675
911751	REC911751	675
911753	REC911753	675
911826	CEF500506	686-693
911830	REC3852352	686
911871	REC309731	686-690
911878	REC911878	677
911937	REC911937	675
911962	REC911962	685
912127	REC912127	677-685
912157	REC912157	677
912212	REC59830A7	675-680
912213	REC393831	675-680
912214	REC75832T	675-695
912238	REC912238	675
912273	REC91-805475A1	695
912304	REC10-20518	686
912374	CEF500521K	693
912374	REC912374	665-693
912392	TEN00712	679
912442	HOT20903	665
912509	REC966382	691-692
912607	REC337774	694
912614	REC912614	675
912627	REC3852602	667
912714	REC57-34359	692
912714	REC57-96834Q	692
913393	FEL17460	669
913393	REC913393	658-669
913784	REC3863191	670
914036	CEF500527K	686-693
914036	REC914036	686-693
914488	REC914488	675
914766	HGE3394	669
915716	REC915716	695
915719	REC915719	677
915720	REC915720	677
915840	REC915840	675-686-688
915918	REC43436	686
915954	REC915954	679
925093	REC925093	680
976669	REC976669	672
976669	REC976669AL	672
979659	REC823426A1	626

OEM	REF	
979774	REC0979774	633
979821	REC1347-818619R02	628
980152	REC33765T	640
980183	REC980183	687
980530	REC1347-818619R02	624
980536	BAOMC20-980536	661
980617	BAOMC20-980617	669
980892	REC834975	642
980893	REC8M6001219	642
980959	BAOMC-1-980959	669
981195	REC981195	687-690-694
981196	REC981196	683-690-694
981220	REC981220	683-694
981268	REC981268	683-690
981281	BAOMC20-981281	669
981288	REC50-808011A05	631
981289	REC50-97499A2	631
981359	REC1347-816373A4	625-628
981428	REC1347-816373A4	625-628
981462	BAOMC1-981462	661
981564	REC1347-816373A4	625-628
981650	REC3855276	624
981705	REC1347-816373A4	625-628
981797	REC981797	688
981801	REC981801	688
981803	REC1347-816373A4	625-628
981911	REC981911	621
982058	REC0982706	634
982063	REC62092T	624
982187	REC3853839	633
982201	BAOMC29-314810	637
982202	REC50-97499A2	631
982209	REC982209	641
982211	REC89825302	642
982215	REC1347-816373A4	625-628
982217	REC1347-818619R02	624
982223	REC1347-816373A4	625-628
982230	REC982230	621
982240	REC86234A4	624
982336	REC835702	641
982342	REC841243	642
982384	REC823427A1	626-627-629
982386	REC982386	626
982422	REC334163	685
982422	REC982422	684
982438	REC982438	672
982438	REC982438AL	672
982517	REC3853796	671
982537	REC1396-4656	626
982538	REC1396-4656	626
982539	REC1396-5238	626-629
982657	BAOMC1-982657	662
982706	REC0982706	634
982749	REC987739	643
982755	REC987739	643
982774	REC987739	643
982946	REC313080	688
982946	REC982946	688
982947	REC982947	688
982997	REC982997	624
983019	REC0393988	634
983073	REC841994	626
983218	REC879031	689
983298	REC983298	683-689
983318	ARC6211	634
983494	CM983494	685
983494	REC983494	672
983494	REC983494AL	672
983825	REC983825	675
983826	REC983826	675
983855	REC1347-816373A4	625-628
983864	REC823426A1	626
983870	REC1397-2150	621
983871	REC1397-3327	628-629
983877	REC983877	675
983878	REC983878	675
983880	REC983880	675
983891	REC31-35990A1	675
983892	REC983892	675
983939	RM3850470	635
983967	REC983967	675
984012	REC984012	675
984036	REC987739	643
984054	BAOMC1-984054	663
984180	REC1347-818619R02	624-628
984264	REC984264	675
984276	REC987739	643
984281	REC987739	643
984387	GS38322	665
984458	REC439967	678
984462	REC984462	677
984487	REC841994	626
984491	REC984491	621
984536	REC0984536	631
984547	REC983952	672
984547	REC983952AL	672
984628	REC0984628	631
984730	REC987739	643
984731	RM3850470	635
984744	REC984744	675
984982	REC50-808011A05	631
985052	REC985052	627-629
985063	REC3853839	633
985218	REC985218	641
985237	REC0393988	634
985429	REC46-8M0113734	671
985470	HGE5470	637
985518	REC987678	694
985602	REC86234A4	624
985603	REC86234A4	624
985612	REC985612	678
985764	REC392-6330	640
985822	REC1347-816373A4	625-628
985902	REC987739	643
985964	REC0985964	633
985964	REC3860769	633
986008	REC3860769	633
986041	HGE6041	669
986280	REC382138	634
986280	REC3853945	634
986292	REC3850360	637
986342	REC987739	643
986423	REC987678	694
986642	REC3854001	640
986650	REC3854003	640
986782	REC986782	627-629
986784	REC986799	627
986796	REC3854020	627
986799	REC986799	627
986837	REC987739	643
986838	REC986838	677
986979	REC986979	677-679-694
986980	REC5004218	677-679-694
987136	REC8M6001219	642
987313	REC3854105	627
987315	REC987315	627-629
987438	REC21533394	627
987440	REC21533394	627
987485	REC21533394	627
987604	REC987678	694
987661	REC987661	686-694
987678	REC987678	686-694
987716	REC3850360	637
987738	REC987739	643
987739	REC987739	643
987740	REC987739	643
987754	RM3862228	619
987800	REC987800	673
987811	REC3854190	632
987894	REC8M6001219	642
987895	REC8M6001249	641
988013	REC0984536	631
988217	REC50-806965A4	632
988247	REC69729	633
1114356	REC13037	633
3471293	REC3853796	671
3847499	MAR499	664
3850360	REC3850360	637
3850396	REC3850396	630
3850470	RM3850470	635-686
3850495	REC3850495	662-663
3850799	BAOMC20-910380	662-663
3850812	REC3850812	675-680-695
3850814	REC3850814	680
3850852	REC3850852	680
3850853	REC183247	680
3850942	REC3850942	681
3851982	SHEG9903	637
3852093	REC16-56826	661-663
3852217	REC300-00879	638
3852272	REC3852272	680-690
3852279	REC3852279	680
3852308	REC967344	680
3852315	REC3852315	681
3852317	REC3852317	680
3852347	BAOMC1-3852347	667
3852350	REC3852350	681-698
3852455	FEL17460	667
3852455	REC3852455	647-652-658-659-667-669
3852464	REC3852464	691-692
3852467	REC3852467	664-665-666
3852468	REC27-33395	665-666
3852472	REC27-46820	654-657-668
3852473	REC328694	683
3852476	REC3852476	667-670
3852504	REC57-48122Q	692
3852504	REC57-78200Q1	693
3852538	REC3852538	664-666-668
3852544	REC3808228	686
3852548	REC3852548	686-691
3852550	REC3852550	686
3852560	REC3852560	680-689
3852561	REC3589522	675-680
3852562	REC3589524	675-680
3852565	REC25-25439	675-680-690
3852568	REC3852568	675-680
3852604	GS38320	661-662-663-664-665-666-667-668
3852655	REC17971	646
3852687	FEL17946	648-652-660
3852687	REC17931	649-651
3852693	REC17900	645
3852696	REC3852696	664-666-667-668-693
3852741	REC3863450	663-664-666-667-668-693
3852742	REC3852742	665-693
3852830	REC3852830	664-666-667-668
3852865	REC3852865	681
3852866	REC3852866	681
3852959	REC3852959	681
3853155	REC10-37612	667
3853256	REC27-815528	645
3853283	REC3853283	625
3853326	REC10-37612	668
3853336	REC17000	644-645
3853343	REC17950	645
3853380	REC17020	648
3853380	REC17030	649-650
3853404	REC46335	664-666-667
3853412	REC27-99757	646-664
3853434	REC3853434	667
3853513	REC17937	655-657
3853548	REC1463-9382	638
3853655	REC3853655	675-690
3853786	REC54-815504320	665
3853787	REC806490T	630
3853799	REC3853799	636
3853801	REC3853801	642
3853807	REC30-879194A01	686
3853814	REC392-9086T	641
3853815	REC392-9766	641
3853818	CM984513	672-677
3853818	CM984513A	672
3853850	REC46-8M0113734	671
3853854	REC3853854	635
3853855	REC3853855	635
3853856	REC3853856	635
3853857	REC3853857	635
3853858	REC853868	690
3853860	GS38322	664-666-667-668
3853917	REC3858437	693
3853930	REC986158	672
3853930	REC986158AL	672
3853930	TEN00919	686
3853934	REC3853934	681
3853945	REC382138	634
3853945	REC3853945	634
3854001	REC3854001	640
3854002	REC3854002	638
3854003	REC3854003	640
3854020	REC3854020	627
3854061	REC987067	672
3854061	REC987067AL	672
3854086	RM21610333	625-628
3854087	MP426422	625
3854105	REC3854105	627

OEM	REF	
3854127	**CEF500514K**	686-693
3854127	**REC3841481**	686-693
3854159	**REC3854159**	630
3854161	**REC3854161**	638
3854190	**REC3854190**	632
3854194	**REC0987883**	631
3854217	**REC3854217**	640
3854249	**REC31-66668A1**	681
3854250	**REC31-86748A1**	681-687
3854254	**BAOMC29-910303**	637
3854260	**REC3854260**	641
3854261	**REC3854261**	642
3854299	**REC17010**	646
3854300	**REC17920**	647
3854331	**REC3854331**	641
3854347	**REC3854020**	627
3854402	**REC854040**	681
3854539	**REC22-67892A05**	681
3854548	**REC3854548**	641
3854595	**REC3854595**	681
3854620	**REC3858261**	624
3854874	**RM3854874**	664
3854942	**REC17921**	647
3855079	**SHEG9903**	637
3855184	**REC8M0125617**	630
3855269	**REC3855269**	667
3855271	**REC3855271**	667
3855411	**CM3855411**	681
3855411	**REC3851411**	672
3855411	**REC3863193AL**	672
3855991	**REC46-8M0113735**	671
3856138	**REC17982**	649-651
3856443	**REC17903**	645
3857532	**REC8M0068784**	630
3857533	**REC3857533**	633
3857675	**REC3857675**	681
3857723	**MAR501**	666
3857794	**SHEG9903**	637
3857944	**MAR061**	664-666-668
3857986	**REC3858261**	624
3858261	**REC3858261**	624
3858340	**REC46-8M0113733**	671
3858462	**REC3858462**	691
3858847	**SHEG9901**	637
3860566	**REC50-863007A1**	632
3860566	**REC50-99418A2**	632
3860842	**REC3860842**	680
3861459	**RM3861459**	668
3862500	**REC3862500**	664-666
3863090	**REC3863090**	681
3863191	**REC3863191**	665-666-667-668
5000074	**REC5000074**	679-685
5004257	**REC5004257**	679
5004765	**REC5004765**	679
5004941	**REC320635**	684
5005034	**REC5005034**	699
5008966	**REC314503**	685
5008966	**REC398042**	699
5008966	**REC398042**	679-681
21533394	**REC21533394**	627
10-812509184	**MP0180-001**	632
10-861788	**REC10-861788**	632
17177A1	**REC17177A1**	640
22-89771Q2	**GS31066**	620-622
311606C	**REC3852106**	692
35-60494A4	**REC24950**	619
35-802893Q4	**RAC320R-RAC-02**	619-620
35-809097	**LENS3213**	620
35-809097	**RACS3213**	620
35-809099	**RACS3214**	620
35-809101	**RACS3220UL**	619-620
35-886638	**LENS3227**	620
35-886638	**RACS3227**	620
3789161GM	**REC27-8146801**	689
3850301-7	**SOL8611-145-19**	697
3850301-7	**SOL8613-143-19**	697
3850322-3	**SOL8652-145-21**	697
3855479-6	**SOL8612-150-15**	697
3855479-6	**SOL8614-148-15**	697
3855480-4	**SOL8612-148-17**	697
3855480-4	**SOL8614-145-17**	697
3855481-2	**SOL8612-145-19**	697
3855481-2	**SOL8614-143-19**	697

ES

GUÍA MANTENIMIENTO DE MOTORES 710

SISTEMA ALIMENTACIÓN Y FILTRACIÓN 716

ACCESORIOS PARA FILTROS 725
BOMBA DE COMBUSTIBLE 725
- BOMBA DE COMBUSTIBLE MECÁNICA 725

FILTRO DE ACEITE 721
- JUNTA BOMBA ACEITE 722
- JUNTA SOPORTE FILTRO ACEITE 722

FILTRO DE AIRE 723
FILTRO DE COMBUSTIBLE Y ELEMENTOS 716
- FILTRO DECANTADOR - DIESEL 718
- FILTRO GASOLINA 716

MANGUERA CARBURANTE 723
RACORES 724
TURBO 726

SISTEMA ELÉCTRICO 729

ALTERNADORES 731
- CORREAS 732

MOTORES DE ARRANQUE 730
SENSORES 729
SOLENOIDE RELÉ 733
- SOLENOIDE 733
- RELÉ 733

SISTEMA DE REFRIGERACIÓN 734

BOMBA ASPIRACIÓN DE AGUA 735
- CORREA DE LA BOMBA 737
- JUNTAS DE LA BASE 736
- JUNTAS DE LA BOMBA 737

KIT JUNTAS DEL ENFRIADOR DE AIRE 738
- GUÍA 738

KIT JUNTAS DEL ENFRIADOR DE ACEITE 741
- GUÍA 742

KIT JUNTAS DEL ENFRIADOR DE AGUA 739
- GUÍA 740

TERMOSTATO 734
- JUNTAS 735

PARTES DEL MOTOR 743

ARANDELAS 755
JUNTAS DE MOTOR 743
- IMPULSORES 753
- JUNTAS BOMBA COMBUSTIBLE 752
- JUNTAS CARTER 752
- JUNTAS CODO ESCAPE 750
- JUNTAS COLECTOR ADMISIÓN 749
- JUNTAS COLECTOR ESCAPE 749
- JUNTAS CULATA 743
- JUNTAS TAPA ADMISIÓN 749
- JUNTAS TAPA ÁNODO 751
- JUNTAS TAPA BALANCINES 748
- JUNTAS TAPA BOMBA 752
- JUNTAS TAPA ESCAPE 750
- JUNTAS TAPA RESPIERADERO 751
- JUNTAS TAPA RETÉN DELANTERO 753
- JUNTAS TAPA RETÉN TRASERO 753
- JUNTAS TAPA VARILLA ACEITE 751
- JUNTAS TURBO 750

KITS CON JUNTA CULATA 745
KITS SIN JUNTA CULATA 748
RETÉN TAPA BLOQUE 751
RETÉN TAPA LATERAL BLOQUE 751

KITS PISTONES 758
- KITS AROS DE PISTONES 758
- KITS COJINETES AXIALES 761
- KITS COJINETES BANCADA 759
- KITS COJINETES BANCADA CENTRAL 759
- KITS COJINETES BANCADA DELANTEROS 760
- KITS COJINETES BANCADA TRASEROS 760
- KITS COJINETES BIELA 760

RETENES CIGÜEÑAL 757
VÁLVULAS 762
- RETENES 762

SISTEMA ESCAPE Y ADMISIÓN 764

CODOS 764
- CODOS ESCAPE INOX 765

UNIDADES DE TRANSMISIÓN 767

ÁNODOS 767
- ÁNODO CANADA METAL 771
- ÁNODO TECNOSEAL 769
- ÁNODO RECMAR 767

KITS RETENES TRANSMISIÓN 772
SOPORTE MOTOR 771

SISTEMA DE PROPULSIÓN 774

HÉLICES AL E INOX DE 3 Y 4 PALAS 774

REF --> RO 776
RO --> REF 779

EN

GUIDE: ENGINE MAINTENANCE 710

FUEL & FILTRATION SYSTEM 716

AIR FILTER 723
FILTER ACCESSORIES 725
FUEL FILTER AND ELEMENTS 716
- COMPLETE DIESEL FILTER 718
- FUEL FILTER 716

FUEL HOSE 723
FUEL PUMP 725
- MECHANICAL FUEL PUMP 725

OIL FILTER 721
- OIL FILTER SUPPORT GASKET 722
- OIL PUMP GASKETS 722

RACORES 724
TURBO 726

ELECTRIC SYSTEM 729

ALTERNATORS 731
- BELTS 732

STARTERS 730
SENSORS 729
SOLENOID & RELAY 733
- SOLENOID 733
- RELAY 733

COOLING SYSTEM 734

AIRCOOLER GASKETS 738
- GUIDE 738

COOLER GASKETS 739
- GUIDE 740

OIL COOLER GASKETS 741
- GUIDE 742

RAW MARINE WATER PUMP 735
- GASKETS PUMP 736
- PUMPS BASE GASKET 736
- PUMPS BELT 737

THERMOSTAT 734
- GASKETS 735

ENGINE PARTS 743

CRANKSHAFT SEAL 757
ENGINE GASKETS 743
- BREATHER COVER GASKET 751
- COVER GASKET ANODE 751
- COVER GASKET OIL DISPTICK 751
- CYLINDER HEAD GASKETS 743
- EXHAUST COVER GASKET 750
- EXHAUST ELBOW GASKET 750
- EXHAUST MANIFOLD GASKET 749
- FRONT SEAL COVER GASKET 753
- FUEL PUMP GASKET 752
- IMPELLERS 753
- INTAKE COVER GASKET 749
- INTAKE MANIFOLD GASKET 749
- KITS WITH HEAD GASKET 745
- KITS WITHOUT HEAD GASKET 748
- OIL PAN GASKET 752
- PUMP COVER GASKET 752
- REAR SEAL COVER GASKET 753
- SEAL COVER BLOCK 751
- SEAL SIDE COVER BLOCK 751
- TURBO GASKETS 750
- VALVE COVER GASKETS 748

PISTONS KIT 758
- AXIAL BEARING KIT 758
- CONNECTING ROD BEARING KITS 760
- MAIN BEARING KITS 759
- MAIN BEARING KITS CENTRAL 759
- MAIN BEARING KITS FRONT 760
- MAIN BEARING KITS REAR 760
- PISTONS RINGS SET 758

VALVE 762
- VALVE STEM SEALS 762

WASHERS 755

EXHAUST & INTAKE SYSTEM 764

ELBOWS 764
- SS ELBOWS 765

TRANSMISSION UNIT 767

ANODE 767
- CANADA METAL 771
- TECNOSEAL 769
- RECMAR 767

ENGINE MOUNT SCREW 771
TRANSMISION SEAL KIT 772

PROPULSION SYSTEM 774

3 & 4 BLADE AL & SS PROPELLERS 774

REF --> RO 776
RO --> REF 779

YANMAR

IT

GUÍA MANUTENZIONE MOTORI 710

SITEMA DI ALIMENTAZIONE E FILTRAZIONE 716

ACCESSORI PER FILTRI 725
POMPA COMBUSTIBILE 725
POMPA MECCANICA 725
FILTRO OLIO 721
GUARNIZIONE POMPE OLIO 721
GUARNIZIONE SUPPORTO FILTRO 721
FILTRO ARIA 723
FILTRI BENZINA 716
FILTRO DECANTATORE - DIESEL 718
FILTRO BENZINA 716
TUBO DI CARBURANTE 723
RACCORDI 724
TURBINE 726

SISTEMA ELETTRICCO 729

ALTERNATORI 731
CINGHIE 732
MOTORINI AVVIAMENTO 730
SENSORE 729
SOLENOIDI E RELÉ 733
SOLENOIDE 733
RELÉ POMPA ELETTRICA 733

SISTEMA DI RAFFREDDAMENTO 734

KIT GUARNIZIONE RAFFREDATORE ACQUA 739
GUIDA 740
KIT GUARNIZIONE RAFFREDATORE ARIA 738
GUIDA 738
KIT GUARNIZIONE RAFFREDATORE OLIO 741
GUIDA 742

POMPE ASPIRAZIONE ACQUA MARINA 735
CINGHIE POMPA 737
GUARNIZIONE BASE POMPA 736
GUARNIZIONE POMPA 737
TERMOSTATO 734
GUARNIZIONE 735

PARTI MOTORE 743

GUARNIZIONE MOTORE 743
COLLETTORE ASPIRAZIONE 749
COLLETTORE SCARICO 749
COPERCHIO ANODO 751
COPERCHIO ASPIRAZIONE 749
COPERCHIO ASTA DI OLIO 751
COPERCHIO BLOCCO 743
COPERCHIO LATERALE 751
COPERCHIO PARAOLIO ANTERIORE 753
COPERCHIO PARAOLIO POSTERIORE 753
COPERCHIO POMPA 752
COPERCHIO PUNTERIE 748
COPERCHIO SCARICO 750
COPERCHIO SFIATATOIO 751
COPPA DELL'OLIO 752
GIRANTI 753
GOMITO DI SCARICO 750
KIT CON GUARNIZIONE TESTATA 744
KIT SENZA GUARNIZIONE TESTATA 748
POMPA CONBUSTIBILE 752
TESTATA 743
KIT PISTONI 758
KIT BRONZE ASSIAL 761
KIT BRONZE DI BANCO 759
KIT BRONZE DI BANCO ANTERIORE 760
KIT BRONZE DI BANCO CENTRO 759
KIT BRONZE DI BANCO POSTERIORE 760
KIT BRONZE DI BIELLA 760
KIT FASCE PISTONI 758
PARAOLIO ALBERO MOTORE 757
RONDELLE 755
VALVOLA 762
PARAOLIO 762

SISTEMA DI SCARICO E ASPIRAZIONE 764764

GOMITI 764
GOMITO SCARICO INOSS 765

UNITÀ DI TRASMISSIONE 767

ANODI 767
ANODI CANADA METAL 771
ANODI TECNOSEAL 769
ANODI RECMAR 767
SUPPORTI MOTORE 771
KIT GUARNIZIONE TRASMISSIONE 772

SISTEMA DI PROPULSIONE 774

ELICHE ALLUMINIO E INOX DA 3 E 4 PALE 774

REF --> RO 776
RO --> REF 779

FR

GUIDE MAINTENANCE MOTEURS 710

SYSTÈME D'ALIMENTATION ET DE FILTRATION 716

ACCESSOIRES POUR FILTRES 725
FILTRE À AIRE 723
FILTRE À ESSENCE ET CARTOUCHE DE RECHANGE 716
FILTRE À ESSENCE 716
FILTRE DÉCANTATEUR - DIESEL 718
FILTRE À HUILE 721
JOINTS POMPE D'HUILE 722
JOINTS SUPPORT FILTRE 722
POMPE À ESSENCE MECANIQUE 725
RACCORDS 724
TURBO 726
TUYAU DU CARBURANT 723

SYSTÈME ÉLECTRIQUE 729

ALTERNATEUR 731
COURROIES 732
CAPTEURS 729
DÉMARREUR 730
SOLENOIDE RELAIS 733

SYSTÈME DE REFROIDISSEMENT 734

KIT JOINTS REFFROIDISSEURS AIR 738
GUIDE 738
KIT JOINTS REFFROIDISSEURS EAU 739
GUIDE 740
KIT JOINTS REFFROIDISSEURS HUILE 741
GUIDE 742

POMPE D'EAU MARINE 735
JOINTS BASE DE LA POMPE 736
JOINTS POMPE 737
COURROIES DE LA POMPE 737
THERMOSTAT 734
JOINTS 735

PIECES MOTEUR 743

JOINTS MOTEUR
JOINS COUVER-SOUPAPE
JOINT CARTER
JOINT CARTER ADMISSION
JOINT COLECTEUR D'ÉCHAPPEMENT
JOINT COUDES D'ÉCHAPPEMENT
JOINT COUVERCLE ADMISSION
JOINT COUVERCLE ANODE
JOINT COUVERCLE D'ÉCHAPPEMENT
JOINT COUVERCLE D'HUILE
JOINT COUVERCLE DU BLOC
JOINT COUVERCLE LATERAL DU BLOC
JOINT COUVERCLE POMPA
JOINT CULASSE
JOINT DE PLAQUE
JOINT DE PLAQUE AVANT
JOINT SPI COUVERCLE ARRIÉRE
JOINT TURBO
KITS AVEC JOINT DE CULASSE
KITS SANS JOINT DE CULASSE
TURBINES
JOINTS VILEBREQUIN
KITS PISTONS
KITS COUSSINET VILEBR. AVANT-ARRIERE
KITS COUSSINET VILEBREQUIN
KITS COUSSINET VILEBREQUIN CENTRAL
KITS ROULEMENT AXIAL
KITS ROULEMENT DE BIELLE
KITS SEGMENTS DE PISTONS
RONDELLES
SOUPAPES
JOINTS D'HUILE

SYSTÊME D'ECHAPPEMENT ET D'AMISSION

COUDES
COUDES D'ÉCHAPPEMENT INOX

EMBASES ET PIÈCES 767

ANODES
ANODES CANADA METAL
ANODES TECNOSEAL
KIT JOINT D'EMBASE
SUPPORT MOTEUR

SYSTÉME DE PROPULSION 774

HÉLICE ALUMINIUM ET INOX 3 ET 4 PALES 774

REF --> RO 776
RO --> REF 779



	REF				
1GM 1GM10	REC119305-35151	FILTRO ACEITE	OIL FILTER	FILTRO OLIO	FILTRE D'HUILE
	REC104500-55710	FILTRO COMBUSTIBLE	FUEL FILTER	FILTRO COMBUSTIBILE	FILTRE CARBURANT
	REC128170-12540	FILTRO AIRE	AIR FILTER	FILTRO ARIA	FILTRE D'AIRE
	CEF500113	IMPULSOR	IMPELLER	GIRANTE	TURBINE
	REC105582-49200	TERMOSTATO	THERMOSTAT	TERMOSTATO	THERMOSTAT
	REC128170-77350	CORREA ALTERNADOR	ALTERNATOR BELT	CINGHIA ALTERNATORE	COUROIE ALTERNATEUR
	TEN01303	ÁNODO	ANODE	ANODO	ANODE
1GML	REC119305-35151	FILTRO ACEITE	OIL FILTER	FILTRO OLIO	FILTRE D'HUILE
	REC104500-55710	FILTRO COMBUSTIBLE	FUEL FILTER	FILTRO COMBUSTIBILE	FILTRE CARBURANT
	REC128170-12540	FILTRO AIRE	AIR FILTER	FILTRO ARIA	FILTRE D'AIRE
	CEF500113	IMPULSOR	IMPELLER	GIRANTE	TURBINE
	REC105582-49200	TERMOSTATO	THERMOSTAT	TERMOSTATO	THERMOSTAT
	REC128170-77350	CORREA ALTERNADOR	ALTERNATOR BELT	CINGHIA ALTERNATORE	COUROIE ALTERNATEUR
	TEN01303	ÁNODO	ANODE	ANODO	ANODE
1GMY-C	REC119305-35151	FILTRO ACEITE	OIL FILTER	FILTRO OLIO	FILTRE D'HUILE
	REC104500-55710	FILTRO COMBUSTIBLE	FUEL FILTER	FILTRO COMBUSTIBILE	FILTRE CARBURANT
	REC128171-12540	FILTRO AIRE	AIR FILTER	FILTRO ARIA	FILTRE D'AIRE
	CEF500113	IMPULSOR	IMPELLER	GIRANTE	TURBINE
	REC105582-49200	TERMOSTATO	THERMOSTAT	TERMOSTATO	THERMOSTAT
	TEN01303	ÁNODO	ANODE	ANODO	ANODE
2GM20	REC119305-35151	FILTRO ACEITE	OIL FILTER	FILTRO OLIO	FILTRE D'HUILE
	REC104500-55710	FILTRO COMBUSTIBLE	FUEL FILTER	FILTRO COMBUSTIBILE	FILTRE CARBURANT
	REC128270-12540	FILTRO AIRE	AIR FILTER	FILTRO ARIA	FILTRE D'AIRE
	REC3586494	IMPULSOR	IMPELLER	GIRANTE	TURBINE
	REC105582-49200	TERMOSTATO	THERMOSTAT	TERMOSTATO	THERMOSTAT
	REC25132-003100	CORREA ALTERNADOR	ALTERNATOR BELT	CINGHIA ALTERNATORE	COUROIE ALTERNATEUR
	REC104511-78780E	CORREA BOMBA	PUMP BELT	CINGHIA POMPA	COURROIE POMPE
	CMC272100-20030	ÁNODO	ANODE	ANODO	ANODE
2GM20F	REC119305-35151	FILTRO ACEITE	OIL FILTER	FILTRO OLIO	FILTRE D'HUILE
	REC104500-55710	FILTRO COMBUSTIBLE	FUEL FILTER	FILTRO COMBUSTIBILE	FILTRE CARBURANT
	REC128270-12540	FILTRO AIRE	AIR FILTER	FILTRO ARIA	FILTRE D'AIRE
	REC22779-0001	IMPULSOR	IMPELLER	GIRANTE	TURBINE
	REC121750-49800	TERMOSTATO	THERMOSTAT	TERMOSTATO	THERMOSTAT
	REC124732-42290	CORREA ALTERNADOR	ALTERNATOR BELT	CINGHIA ALTERNATORE	COUROIE ALTERNATEUR
	REC104511-78780E	CORREA BOMBA	PUMP BELT	CINGHIA POMPA	COURROIE POMPE
	CMC272100-20030	ÁNODO	ANODE	ANODO	ANODE
2GM20F-YEU	REC119305-35151	FILTRO ACEITE	OIL FILTER	FILTRO OLIO	FILTRE D'HUILE
	REC104500-55710	FILTRO COMBUSTIBLE	FUEL FILTER	FILTRO COMBUSTIBILE	FILTRE CARBURANT
	REC128270-12540	FILTRO AIRE	AIR FILTER	FILTRO ARIA	FILTRE D'AIRE
	REC653-0001	IMPULSOR	IMPELLER	GIRANTE	TURBINE
	REC121750-49800	TERMOSTATO	THERMOSTAT	TERMOSTATO	THERMOSTAT
	REC25132-003700	CORREA ALTERNADOR	ALTERNATOR BELT	CINGHIA ALTERNATORE	COUROIE ALTERNATEUR
	REC104511-78780E	CORREA BOMBA	PUMP BELT	CINGHIA POMPA	COURROIE POMPE
	CMC272100-20030	ÁNODO	ANODE	ANODO	ANODE
2GM20-YEU	REC119305-35151	FILTRO ACEITE	OIL FILTER	FILTRO OLIO	FILTRE D'HUILE
	REC104500-55710	FILTRO COMBUSTIBLE	FUEL FILTER	FILTRO COMBUSTIBILE	FILTRE CARBURANT
	REC128270-12540	FILTRO AIRE	AIR FILTER	FILTRO ARIA	FILTRE D'AIRE
	REC653-0001	IMPULSOR	IMPELLER	GIRANTE	TURBINE
	REC105582-49200	TERMOSTATO	THERMOSTAT	TERMOSTATO	THERMOSTAT
	REC25132-003100	CORREA ALTERNADOR	ALTERNATOR BELT	CINGHIA ALTERNATORE	COUROIE ALTERNATEUR
	REC104511-78780E	CORREA BOMBA	PUMP BELT	CINGHIA POMPA	COURROIE POMPE
	CMC272100-20030	ÁNODO	ANODE	ANODO	ANODE
2GMLP	REC119305-35151	FILTRO ACEITE	OIL FILTER	FILTRO OLIO	FILTRE D'HUILE
	REC104500-55710	FILTRO COMBUSTIBLE	FUEL FILTER	FILTRO COMBUSTIBILE	FILTRE CARBURANT
	REC128270-12540	FILTRO AIRE	AIR FILTER	FILTRO ARIA	FILTRE D'AIRE
	REC25132-003100	CORREA ALTERNADOR	ALTERNATOR BELT	CINGHIA ALTERNATORE	COUROIE ALTERNATEUR
	CMC272100-20030	ÁNODO	ANODE	ANODO	ANODE
2GMSZK	REC119305-35151	FILTRO ACEITE	OIL FILTER	FILTRO OLIO	FILTRE D'HUILE
	REC121750-55701	FILTRO COMBUSTIBLE	FUEL FILTER	FILTRO COMBUSTIBILE	FILTRE CARBURANT
	REC128270-12540	FILTRO AIRE	AIR FILTER	FILTRO ARIA	FILTRE D'AIRE
	REC3586494	IMPULSOR	IMPELLER	GIRANTE	TURBINE
	REC105582-49200	TERMOSTATO	THERMOSTAT	TERMOSTATO	THERMOSTAT
	REC25132-003000	CORREA ALTERNADOR	ALTERNATOR BELT	CINGHIA ALTERNATORE	COUROIE ALTERNATEUR
	REC128695-42780	CORREA BOMBA	PUMP BELT	CINGHIA POMPA	COURROIE POMPE
	CMC272100-20030	ÁNODO	ANODE	ANODO	ANODE
3GM30	REC119305-35151	FILTRO ACEITE	OIL FILTER	FILTRO OLIO	FILTRE D'HUILE
	REC104500-55710	FILTRO COMBUSTIBLE	FUEL FILTER	FILTRO COMBUSTIBILE	FILTRE CARBURANT
	REC128270-12540	FILTRO AIRE	AIR FILTER	FILTRO ARIA	FILTRE D'AIRE
	REC3586494	IMPULSOR	IMPELLER	GIRANTE	TURBINE
	REC105582-49200	TERMOSTATO	THERMOSTAT	TERMOSTATO	THERMOSTAT
	CMC272100-20030	ÁNODO	ANODE	ANODO	ANODE

	REF				
3GM30	REC119305-35151	FILTRO ACEITE	OIL FILTER	FILTRO OLIO	FILTRE D'HUILE
	REC104500-55710	FILTRO COMBUSTIBLE	FUEL FILTER	FILTRO COMBUSTIBILE	FILTRE CARBURANT
	REC128270-12540	FILTRO AIRE	AIR FILTER	FILTRO ARIA	FILTRE D'AIRE
	REC3586494	IMPULSOR	IMPELLER	GIRANTE	TURBINE
	REC105582-49200	TERMOSTATO	THERMOSTAT	TERMOSTATO	THERMOSTAT
	CMC272100-20030	ÁNODO	ANODE	ANODO	ANODE
3GM30F	REC119305-35151	FILTRO ACEITE	OIL FILTER	FILTRO OLIO	FILTRE D'HUILE
	REC104500-55710	FILTRO COMBUSTIBLE	FUEL FILTER	FILTRO COMBUSTIBILE	FILTRE CARBURANT
	REC128270-12540	FILTRO AIRE	AIR FILTER	FILTRO ARIA	FILTRE D'AIRE
	REC22779-0001	IMPULSOR	IMPELLER	GIRANTE	TURBINE
	REC121750-49800	TERMOSTATO	THERMOSTAT	TERMOSTATO	THERMOSTAT
	REC104511-78780E	CORREA ALTERNADOR	ALTERNATOR BELT	CINGHIA ALTERNATORE	COUROIE ALTERNATEUR
3GM30F-YEU	REC119305-35151	FILTRO ACEITE	OIL FILTER	FILTRO OLIO	FILTRE D'HUILE
	REC104500-55710	FILTRO COMBUSTIBLE	FUEL FILTER	FILTRO COMBUSTIBILE	FILTRE CARBURANT
	REC128270-12540	FILTRO AIRE	AIR FILTER	FILTRO ARIA	FILTRE D'AIRE
	REC653-0001	IMPULSOR	IMPELLER	GIRANTE	TURBINE
	REC121750-49800	TERMOSTATO	THERMOSTAT	TERMOSTATO	THERMOSTAT
	REC25132-003700	CORREA ALTERNADOR	ALTERNATOR BELT	CINGHIA ALTERNATORE	COUROIE ALTERNATEUR
	REC104511-78780E	CORREA BOMBA	PUMP BELT	CINGHIA POMPA	COURROIE POMPE
3HM	REC124550-35110	FILTRO ACEITE	OIL FILTER	FILTRO OLIO	FILTRE D'HUILE
	REC104500-55710	FILTRO COMBUSTIBLE	FUEL FILTER	FILTRO COMBUSTIBILE	FILTRE CARBURANT
	REC128270-12540	FILTRO AIRE	AIR FILTER	FILTRO ARIA	FILTRE D'AIRE
	REC22779-0001	IMPULSOR	IMPELLER	GIRANTE	TURBINE
	REC105582-49200	TERMOSTATO	THERMOSTAT	TERMOSTATO	THERMOSTAT
	REC128670-77350	CORREA ALTERNADOR	ALTERNATOR BELT	CINGHIA ALTERNATORE	COUROIE ALTERNATEUR
	REC104511-78780E	CORREA BOMBA	PUMP BELT	CINGHIA POMPA	COURROIE POMPE
	CMC272100-20030	ÁNODO	ANODE	ANODO	ANODE
3HM35	REC124550-35110	FILTRO ACEITE	OIL FILTER	FILTRO OLIO	FILTRE D'HUILE
	REC104500-55710	FILTRO COMBUSTIBLE	FUEL FILTER	FILTRO COMBUSTIBILE	FILTRE CARBURANT
	REC128270-12540	FILTRO AIRE	AIR FILTER	FILTRO ARIA	FILTRE D'AIRE
	REC22779-0001	IMPULSOR	IMPELLER	GIRANTE	TURBINE
	REC105582-49200	TERMOSTATO	THERMOSTAT	TERMOSTATO	THERMOSTAT
	REC123672-77370	CORREA ALTERNADOR	ALTERNATOR BELT	CINGHIA ALTERNATORE	COUROIE ALTERNATEUR
	REC104511-78780E	CORREA BOMBA	PUMP BELT	CINGHIA POMPA	COURROIE POMPE
	CMC272100-20030	ÁNODO	ANODE	ANODO	ANODE
3HMF	REC124550-35110	FILTRO ACEITE	OIL FILTER	FILTRO OLIO	FILTRE D'HUILE
	REC104500-55710	FILTRO COMBUSTIBLE	FUEL FILTER	FILTRO COMBUSTIBILE	FILTRE CARBURANT
	REC128270-12540	FILTRO AIRE	AIR FILTER	FILTRO ARIA	FILTRE D'AIRE
	REC22779-0001	IMPULSOR	IMPELLER	GIRANTE	TURBINE
	REC105582-49200	TERMOSTATO	THERMOSTAT	TERMOSTATO	THERMOSTAT
	REC128695-44780	CORREA ALTERNADOR	ALTERNATOR BELT	CINGHIA ALTERNATORE	COUROIE ALTERNATEUR
	REC104511-78780E	CORREA BOMBA	PUMP BELT	CINGHIA POMPA	COURROIE POMPE
	CMC272100-20030	ÁNODO	ANODE	ANODO	ANODE
3JH2	REC119305-35151	FILTRO ACEITE	OIL FILTER	FILTRO OLIO	FILTRE D'HUILE
	REC129470-55703	FILTRO COMBUSTIBLE	FUEL FILTER	FILTRO COMBUSTIBILE	FILTRE CARBURANT
	REC21213660	IMPULSOR	IMPELLER	GIRANTE	TURBINE
	REC129470-49801	TERMOSTATO	THERMOSTAT	TERMOSTATO	THERMOSTAT
	REC25132-004500	CORREA ALTERNADOR	ALTERNATOR BELT	CINGHIA ALTERNATORE	COUROIE ALTERNATEUR
3JH25A	REC129150-35153	FILTRO ACEITE	OIL FILTER	FILTRO OLIO	FILTRE D'HUILE
	REC129470-55703	FILTRO COMBUSTIBLE	FUEL FILTER	FILTRO COMBUSTIBILE	FILTRE CARBURANT
	REC21213660	IMPULSOR	IMPELLER	GIRANTE	TURBINE
	REC129470-49801	TERMOSTATO	THERMOSTAT	TERMOSTATO	THERMOSTAT
	REC25132-004500	CORREA ALTERNADOR	ALTERNATOR BELT	CINGHIA ALTERNATORE	COUROIE ALTERNATEUR
3JH2E 3JH2L	REC119305-35151	FILTRO ACEITE	OIL FILTER	FILTRO OLIO	FILTRE D'HUILE
	REC129470-55703	FILTRO COMBUSTIBLE	FUEL FILTER	FILTRO COMBUSTIBILE	FILTRE CARBURANT
	REC129470-49801	IMPULSOR	IMPELLER	GIRANTE	TURBINE
	REC105582-49200	TERMOSTATO	THERMOSTAT	TERMOSTATO	THERMOSTAT
	REC25132-004500	CORREA ALTERNADOR	ALTERNATOR BELT	CINGHIA ALTERNATORE	COUROIE ALTERNATEUR
3JH2-TCE	REC119305-35151	FILTRO ACEITE	OIL FILTER	FILTRO OLIO	FILTRE D'HUILE
	REC129470-55703	FILTRO COMBUSTIBLE	FUEL FILTER	FILTRO COMBUSTIBILE	FILTRE CARBURANT
	REC129470-12330	FILTRO AIRE	AIR FILTER	FILTRO ARIA	FILTRE D'AIRE
	REC21213660	IMPULSOR	IMPELLER	GIRANTE	TURBINE
	REC129470-49801	TERMOSTATO	THERMOSTAT	TERMOSTATO	THERMOSTAT
	REC25132-004500	CORREA ALTERNADOR	ALTERNATOR BELT	CINGHIA ALTERNATORE	COUROIE ALTERNATEUR
3JH3	REC129150-35151	FILTRO ACEITE	OIL FILTER	FILTRO OLIO	FILTRE D'HUILE
	REC129470-55703	FILTRO COMBUSTIBLE	FUEL FILTER	FILTRO COMBUSTIBILE	FILTRE CARBURANT
	REC21213660	IMPULSOR	IMPELLER	GIRANTE	TURBINE
	REC129470-49801	TERMOSTATO	THERMOSTAT	TERMOSTATO	THERMOSTAT
	REC25132-004500	CORREA ALTERNADOR	ALTERNATOR BELT	CINGHIA ALTERNATORE	COUROIE ALTERNATEUR
3JH3E-YEU-E 3JH4E	REC119305-35151	FILTRO ACEITE	OIL FILTER	FILTRO OLIO	FILTRE D'HUILE
	REC129470-55703	FILTRO COMBUSTIBLE	FUEL FILTER	FILTRO COMBUSTIBILE	FILTRE CARBURANT
	REC21213660	IMPULSOR	IMPELLER	GIRANTE	TURBINE
	REC129470-49801	TERMOSTATO	THERMOSTAT	TERMOSTATO	THERMOSTAT
	REC129940-42310E	CORREA ALTERNADOR	ALTERNATOR BELT	CINGHIA ALTERNATORE	COUROIE ALTERNATEUR
3YM20	REC119305-35151	FILTRO ACEITE	OIL FILTER	FILTRO OLIO	FILTRE D'HUILE
	REC104500-55710	FILTRO COMBUSTIBLE	FUEL FILTER	FILTRO COMBUSTIBILE	FILTRE CARBURANT
	REC128270-12540	FILTRO AIRE	AIR FILTER	FILTRO ARIA	FILTRE D'AIRE
	REC653-0001	IMPULSOR	IMPELLER	GIRANTE	TURBINE
	REC128990-49800	TERMOSTATO	THERMOSTAT	TERMOSTATO	THERMOSTAT
	REC129612-42290E	CORREA ALTERNADOR	ALTERNATOR BELT	CINGHIA ALTERNATORE	COUROIE ALTERNATEUR

	REF				
3YM27A	REC119305-35151	FILTRO ACEITE	OIL FILTER	FILTRO OLIO	FILTRE D'HUILE
	REC104500-55710	FILTRO COMBUSTIBLE	FUEL FILTER	FILTRO COMBUSTIBILE	FILTRE CARBURANT
	REC128991-12500	FILTRO AIRE	AIR FILTER	FILTRO ARIA	FILTRE D'AIRE
	REC128991-42200	IMPULSOR	IMPELLER	GIRANTE	TURBINE
	REC128990-49800	TERMOSTATO	THERMOSTAT	TERMOSTATO	THERMOSTAT
	REC104511-78780E	CORREA ALTERNADOR	ALTERNATOR BELT	CINGHIA ALTERNATORE	COUROIE ALTERNATEUR
3YM30	REC119305-35151	FILTRO ACEITE	OIL FILTER	FILTRO OLIO	FILTRE D'HUILE
	REC104500-55710	FILTRO COMBUSTIBLE	FUEL FILTER	FILTRO COMBUSTIBILE	FILTRE CARBURANT
	REC128270-12540	FILTRO AIRE	AIR FILTER	FILTRO ARIA	FILTRE D'AIRE
	REC653-0001	IMPULSOR	IMPELLER	GIRANTE	TURBINE
	REC128990-49800	TERMOSTATO	THERMOSTAT	TERMOSTATO	THERMOSTAT
	REC128990-77350	CORREA BOMBA	PUMP BELT	CINGHIA POMPA	COURROIE POMPE
	CMC272100-20030	ÁNODO	ANODE	ANODO	ANODE
3YM30AE	REC119305-35151	FILTRO ACEITE	OIL FILTER	FILTRO OLIO	FILTRE D'HUILE
	REC104500-55710	FILTRO COMBUSTIBLE	FUEL FILTER	FILTRO COMBUSTIBILE	FILTRE CARBURANT
	REC128270-12540	FILTRO AIRE	AIR FILTER	FILTRO ARIA	FILTRE D'AIRE
	JOH09-810B	IMPULSOR	IMPELLER	GIRANTE	TURBINE
	REC121750-49800	TERMOSTATO	THERMOSTAT	TERMOSTATO	THERMOSTAT
	REC128695-44780	CORREA ALTERNADOR	ALTERNATOR BELT	CINGHIA ALTERNATORE	COUROIE ALTERNATEUR
4CH-DT	REC127695-35150	FILTRO ACEITE	OIL FILTER	FILTRO OLIO	FILTRE D'HUILE
	REC41650-502330	FILTRO COMBUSTIBLE	FUEL FILTER	FILTRO COMBUSTIBILE	FILTRE CARBURANT
	CEF500114T	IMPULSOR	IMPELLER	GIRANTE	TURBINE
	REC123682-48601	TERMOSTATO	THERMOSTAT	TERMOSTATO	THERMOSTAT
	REC124722-42290	CORREA ALTERNADOR	ALTERNATOR BELT	CINGHIA ALTERNATORE	COUROIE ALTERNATEUR
	REC104511-78780E	CORREA BOMBA	PUMP BELT	CINGHIA POMPA	COURROIE POMPE
	CMC272100-20030	ÁNODO	ANODE	ANODO	ANODE
4JH	REC129150-35150	FILTRO ACEITE	OIL FILTER	FILTRO OLIO	FILTRE D'HUILE
	REC41650-502320	FILTRO COMBUSTIBLE	FUEL FILTER	FILTRO COMBUSTIBILE	FILTRE CARBURANT
	REC129470-42531	IMPULSOR	IMPELLER	GIRANTE	TURBINE
	REC129470-49801	TERMOSTATO	THERMOSTAT	TERMOSTATO	THERMOSTAT
	REC25132-004500	CORREA ALTERNADOR	ALTERNATOR BELT	CINGHIA ALTERNATORE	COUROIE ALTERNATEUR
	REC104511-78780E	CORREA BOMBA	PUMP BELT	CINGHIA POMPA	COURROIE POMPE
3HMF	REC124550-35110	FILTRO ACEITE	OIL FILTER	FILTRO OLIO	FILTRE D'HUILE
	REC104500-55710	FILTRO COMBUSTIBLE	FUEL FILTER	FILTRO COMBUSTIBILE	FILTRE CARBURANT
	REC128270-12540	FILTRO AIRE	AIR FILTER	FILTRO ARIA	FILTRE D'AIRE
	REC22779-0001	IMPULSOR	IMPELLER	GIRANTE	TURBINE
	REC105582-49200	TERMOSTATO	THERMOSTAT	TERMOSTATO	THERMOSTAT
	REC128695-44780	CORREA ALTERNADOR	ALTERNATOR BELT	CINGHIA ALTERNATORE	COUROIE ALTERNATEUR
	REC104511-78780E	CORREA BOMBA	PUMP BELT	CINGHIA POMPA	COURROIE POMPE
	CMC272100-20030	ÁNODO	ANODE	ANODO	ANODE
4JH2-DTE	REC129150-35153	FILTRO ACEITE	OIL FILTER	FILTRO OLIO	FILTRE D'HUILE
	REC129470-55703	FILTRO COMBUSTIBLE	FUEL FILTER	FILTRO COMBUSTIBILE	FILTRE CARBURANT
	REC129470-12330	FILTRO AIRE	AIR FILTER	FILTRO ARIA	FILTRE D'AIRE
	REC21213660	IMPULSOR	IMPELLER	GIRANTE	TURBINE
	REC121750-49800	TERMOSTATO	THERMOSTAT	TERMOSTATO	THERMOSTAT
	REC25132-004600	CORREA ALTERNADOR	ALTERNATOR BELT	CINGHIA ALTERNATORE	COUROIE ALTERNATEUR
4JH2E 4JH2-HTE 4JH2-TE	REC129150-35153	FILTRO ACEITE	OIL FILTER	FILTRO OLIO	FILTRE D'HUILE
	REC129470-55703	FILTRO COMBUSTIBLE	FUEL FILTER	FILTRO COMBUSTIBILE	FILTRE CARBURANT
	REC129470-12330	FILTRO AIRE	AIR FILTER	FILTRO ARIA	FILTRE D'AIRE
	REC21213660	IMPULSOR	IMPELLER	GIRANTE	TURBINE
	REC129470-49801	TERMOSTATO	THERMOSTAT	TERMOSTATO	THERMOSTAT
	REC25132-004600	CORREA ALTERNADOR	ALTERNATOR BELT	CINGHIA ALTERNATORE	COUROIE ALTERNATEUR
4JH2-UTE 4JH3-TE	REC129150-35153	FILTRO ACEITE	OIL FILTER	FILTRO OLIO	FILTRE D'HUILE
	REC129574-55711	FILTRO COMBUSTIBLE	FUEL FILTER	FILTRO COMBUSTIBILE	FILTRE CARBURANT
	REC129470-12330	FILTRO AIRE	AIR FILTER	FILTRO ARIA	FILTRE D'AIRE
	REC21213660	IMPULSOR	IMPELLER	GIRANTE	TURBINE
	REC129470-49801	TERMOSTATO	THERMOSTAT	TERMOSTATO	THERMOSTAT
	REC25132-004600	CORREA ALTERNADOR	ALTERNATOR BELT	CINGHIA ALTERNATORE	COUROIE ALTERNATEUR
4JH3-DTE	REC129150-35153	FILTRO ACEITE	OIL FILTER	FILTRO OLIO	FILTRE D'HUILE
	REC129574-55711	FILTRO COMBUSTIBLE	FUEL FILTER	FILTRO COMBUSTIBILE	FILTRE CARBURANT
	REC129470-12330	FILTRO AIRE	AIR FILTER	FILTRO ARIA	FILTRE D'AIRE
	REC129670-42531	IMPULSOR	IMPELLER	GIRANTE	TURBINE
	REC129470-49801	TERMOSTATO	THERMOSTAT	TERMOSTATO	THERMOSTAT
	REC25132-004600	CORREA ALTERNADOR normal	ALTERNATOR BELT normal	CINGHIA ALTERNATORE normal	COUROIE ALTERNATEUR normal
	REC129673-77680	CORREA ALTERNADOR serpentín	ALTERNATOR BELT serpentine	CINGHIA ALTERNATORE serpentina	COUROIE ALTERNATEUR serpentine
4JH3-HTE	REC129150-35153	FILTRO ACEITE	OIL FILTER	FILTRO OLIO	FILTRE D'HUILE
	REC129574-55711	FILTRO COMBUSTIBLE	FUEL FILTER	FILTRO COMBUSTIBILE	FILTRE CARBURANT
	REC129470-12330	FILTRO AIRE	AIR FILTER	FILTRO ARIA	FILTRE D'AIRE
	REC21213660	IMPULSOR	IMPELLER	GIRANTE	TURBINE
	REC129470-49801	TERMOSTATO	THERMOSTAT	TERMOSTATO	THERMOSTAT
	REC25132-004600	CORREA ALTERNADOR normal	ALTERNATOR BELT normal	CINGHIA ALTERNATORE normal	COUROIE ALTERNATEUR normal
	REC129673-77680	CORREA ALTERNADOR serpentín	ALTERNATOR BELT serpentine	CINGHIA ALTERNATORE serpentina	COUROIE ALTERNATEUR serpentine
4JH4E	REC129150-35153	FILTRO ACEITE	OIL FILTER	FILTRO OLIO	FILTRE D'HUILE
	REC129470-55703	FILTRO COMBUSTIBLE	FUEL FILTER	FILTRO COMBUSTIBILE	FILTRE CARBURANT
	REC21213660	IMPULSOR	IMPELLER	GIRANTE	TURBINE
	REC129470-49801	TERMOSTATO	THERMOSTAT	TERMOSTATO	THERMOSTAT
	REC25152-004300	CORREA ALTERNADOR	ALTERNATOR BELT	CINGHIA ALTERNATORE	COUROIE ALTERNATEUR

	REF				
4JH-DTE	REC129150-35153	FILTRO ACEITE	OIL FILTER	FILTRO OLIO	FILTRE D'HUILE
	REC129470-55703	FILTRO COMBUSTIBLE	FUEL FILTER	FILTRO COMBUSTIBILE	FILTRE CARBURANT
	REC21213660	IMPULSOR	IMPELLER	GIRANTE	TURBINE
	REC129470-49801	TERMOSTATO	THERMOSTAT	TERMOSTATO	THERMOSTAT
	REC25132-004600	CORREA ALTERNADOR	ALTERNATOR BELT	CINGHIA ALTERNATORE	COUROIE ALTERNATEUR
4JHE	REC129150-35153	FILTRO ACEITE	OIL FILTER	FILTRO OLIO	FILTRE D'HUILE
	REC129470-55703	FILTRO COMBUSTIBLE	FUEL FILTER	FILTRO COMBUSTIBILE	FILTRE CARBURANT
	REC129470-12330	FILTRO AIRE	AIR FILTER	FILTRO ARIA	FILTRE D'AIRE
	REC21213660	IMPULSOR	IMPELLER	GIRANTE	TURBINE
	REC129470-49801	TERMOSTATO	THERMOSTAT	TERMOSTATO	THERMOSTAT
	REC25132-004600	CORREA ALTERNADOR	ALTERNATOR BELT	CINGHIA ALTERNATORE	COUROIE ALTERNATEUR
4JH-HTE	REC129150-35153	FILTRO ACEITE	OIL FILTER	FILTRO OLIO	FILTRE D'HUILE
	REC129470-55703	FILTRO COMBUSTIBLE	FUEL FILTER	FILTRO COMBUSTIBILE	FILTRE CARBURANT
	REC21213660	IMPULSOR	IMPELLER	GIRANTE	TURBINE
	REC129470-49801	TERMOSTATO	THERMOSTAT	TERMOSTATO	THERMOSTAT
	REC25132-004500	CORREA ALTERNADOR	ALTERNATOR BELT	CINGHIA ALTERNATORE	COUROIE ALTERNATEUR
4JH-HTZ 4JH-HTZAE	REC129150-35150	FILTRO ACEITE	OIL FILTER	FILTRO OLIO	FILTRE D'HUILE
	REC129470-55703	FILTRO COMBUSTIBLE	FUEL FILTER	FILTRO COMBUSTIBILE	FILTRE CARBURANT
	REC21213660	IMPULSOR	IMPELLER	GIRANTE	TURBINE
	REC129470-49801	TERMOSTATO	THERMOSTAT	TERMOSTATO	THERMOSTAT
	REC25132-004500	CORREA ALTERNADOR	ALTERNATOR BELT	CINGHIA ALTERNATORE	COUROIE ALTERNATEUR
4JH-TE 4JH-TZ	REC129150-35150	FILTRO ACEITE	OIL FILTER	FILTRO OLIO	FILTRE D'HUILE
	REC41650-502320	FILTRO COMBUSTIBLE	FUEL FILTER	FILTRO COMBUSTIBILE	FILTRE CARBURANT
	REC21213660	IMPULSOR	IMPELLER	GIRANTE	TURBINE
	REC129470-12330	FILTRO AIRE	AIR FILTER	FILTRO ARIA	FILTRE D'AIRE
	REC129470-49801	TERMOSTATO	THERMOSTAT	TERMOSTATO	THERMOSTAT
	REC25132-004500	CORREA ALTERNADOR	ALTERNATOR BELT	CINGHIA ALTERNATORE	COUROIE ALTERNATEUR
2GMSZK	REC119305-35151	FILTRO ACEITE	OIL FILTER	FILTRO OLIO	FILTRE D'HUILE
	REC121750-55701	FILTRO COMBUSTIBLE	FUEL FILTER	FILTRO COMBUSTIBILE	FILTRE CARBURANT
	REC128270-12540	FILTRO AIRE	AIR FILTER	FILTRO ARIA	FILTRE D'AIRE
	REC3586494	IMPULSOR	IMPELLER	GIRANTE	TURBINE
	REC105582-49200	TERMOSTATO	THERMOSTAT	TERMOSTATO	THERMOSTAT
	REC25132-003000	CORREA ALTERNADOR	ALTERNATOR BELT	CINGHIA ALTERNATORE	COUROIE ALTERNATEUR
	REC128695-42780	CORREA BOMBA	PUMP BELT	CINGHIA POMPA	COURROIE POMPE
	CMC272100-20030	ÁNODO	ANODE	ANODO	ANODE
4LHA-DTE, -DTP, -DTZE, -DTZP, -HTE, -HTP, -HTZE, -HTZP, -STE, -STP, -STZE	REC127695-35150	FILTRO ACEITE	OIL FILTER	FILTRO OLIO	FILTRE D'HUILE
	REC41650-502320	FILTRO COMBUSTIBLE	FUEL FILTER	FILTRO COMBUSTIBILE	FILTRE CARBURANT
	REC119195-18880	FILTRO AIRE	AIR FILTER	FILTRO ARIA	FILTRE D'AIRE
	REC3841697	IMPULSOR	IMPELLER	GIRANTE	TURBINE
	REC121850-49811	TERMOSTATO	THERMOSTAT	TERMOSTATO	THERMOSTAT
	REC121850-42280E	CORREA ALTERNADOR	ALTERNATOR BELT	CINGHIA ALTERNATORE	COUROIE ALTERNATEUR
	TEN01316	ÁNODO	ANODE	ANODO	ANODE
4LHA-STZP	REC127695-35150	FILTRO ACEITE	OIL FILTER	FILTRO OLIO	FILTRE D'HUILE
	REC41650-502320	FILTRO COMBUSTIBLE	FUEL FILTER	FILTRO COMBUSTIBILE	FILTRE CARBURANT
	REC119195-18880	FILTRO AIRE	AIR FILTER	FILTRO ARIA	FILTRE D'AIRE
	REC3841697	IMPULSOR	IMPELLER	GIRANTE	TURBINE
	REC121850-49811	TERMOSTATO	THERMOSTAT	TERMOSTATO	THERMOSTAT
	REC121850-42280E	CORREA ALTERNADOR	ALTERNATOR BELT	CINGHIA ALTERNATORE	COUROIE ALTERNATEUR
	TEN01317	ÁNODO	ANODE	ANODO	ANODE
4LH-DTE, -DTZ, -HT	REC127695-35150	FILTRO ACEITE	OIL FILTER	FILTRO OLIO	FILTRE D'HUILE
	REC41650-502320	FILTRO COMBUSTIBLE	FUEL FILTER	FILTRO COMBUSTIBILE	FILTRE CARBURANT
	RECXN199611	FILTRO AIRE	AIR FILTER	FILTRO ARIA	FILTRE D'AIRE
	REC3841697	IMPULSOR	IMPELLER	GIRANTE	TURBINE
	REC121850-49811	TERMOSTATO	THERMOSTAT	TERMOSTATO	THERMOSTAT
	REC121850-42280E	CORREA ALTERNADOR	ALTERNATOR BELT	CINGHIA ALTERNATORE	COUROIE ALTERNATEUR
	TEN01317	ÁNODO	ANODE	ANODO	ANODE
4LH-HTE	REC119005-35100	FILTRO ACEITE	OIL FILTER	FILTRO OLIO	FILTRE D'HUILE
	REC121857-55710	FILTRO COMBUSTIBLE	FUEL FILTER	FILTRO COMBUSTIBILE	FILTRE CARBURANT
	RECXN199611	FILTRO AIRE	AIR FILTER	FILTRO ARIA	FILTRE D'AIRE
	REC3841697	IMPULSOR	IMPELLER	GIRANTE	TURBINE
	REC121850-49811	TERMOSTATO	THERMOSTAT	TERMOSTATO	THERMOSTAT
	REC121850-42280E	CORREA ALTERNADOR	ALTERNATOR BELT	CINGHIA ALTERNATORE	COUROIE ALTERNATEUR
	TEN01317	ÁNODO	ANODE	ANODO	ANODE
4LH-HTZ,-HTZAY, STE	REC127695-35150	FILTRO ACEITE	OIL FILTER	FILTRO OLIO	FILTRE D'HUILE
	REC41650-502320	FILTRO COMBUSTIBLE	FUEL FILTER	FILTRO COMBUSTIBILE	FILTRE CARBURANT
	RECXN199611	FILTRO AIRE	AIR FILTER	FILTRO ARIA	FILTRE D'AIRE
	REC3841697	IMPULSOR	IMPELLER	GIRANTE	TURBINE
	REC121850-49811	TERMOSTATO	THERMOSTAT	TERMOSTATO	THERMOSTAT
	REC121850-42280E	CORREA ALTERNADOR	ALTERNATOR BELT	CINGHIA ALTERNATORE	COUROIE ALTERNATEUR
	TEN01317	ÁNODO	ANODE	ANODO	ANODE
4LH-ST, -STZ, -STZAY	REC127695-35150	FILTRO ACEITE	OIL FILTER	FILTRO OLIO	FILTRE D'HUILE
	REC41650-502320	FILTRO COMBUSTIBLE	FUEL FILTER	FILTRO COMBUSTIBILE	FILTRE CARBURANT
	REC3841697	IMPULSOR	IMPELLER	GIRANTE	TURBINE
	REC121850-49811	TERMOSTATO	THERMOSTAT	TERMOSTATO	THERMOSTAT
	REC121850-42280E	CORREA ALTERNADOR	ALTERNATOR BELT	CINGHIA ALTERNATORE	COUROIE ALTERNATEUR
	TEN01317	ÁNODO	ANODE	ANODO	ANODE

	REF				
4LH-TE	REC119005-35100	FILTRO ACEITE	OIL FILTER	FILTRO OLIO	FILTRE D'HUILE
	REC121857-55710	FILTRO COMBUSTIBLE	FUEL FILTER	FILTRO COMBUSTIBILE	FILTRE CARBURANT
	RECXN199611	FILTRO AIRE	AIR FILTER	FILTRO ARIA	FILTRE D'AIRE
	REC3841697	IMPULSOR	IMPELLER	GIRANTE	TURBINE
	REC121850-49811	TERMOSTATO	THERMOSTAT	TERMOSTATO	THERMOSTAT
	REC121850-42280E	CORREA ALTERNADOR	ALTERNATOR BELT	CINGHIA ALTERNATORE	COUROIE ALTERNATEUR
	TEN01317	ÁNODO	ANODE	ANODO	ANODE
4LH-UT, -UTZ, -UTZAY	REC127695-35150	FILTRO ACEITE	OIL FILTER	FILTRO OLIO	FILTRE D'HUILE
	REC41650-502320	FILTRO COMBUSTIBLE	FUEL FILTER	FILTRO COMBUSTIBILE	FILTRE CARBURANT
	REC3841697	IMPULSOR	IMPELLER	GIRANTE	TURBINE
	REC121850-42280E	CORREA ALTERNADOR	ALTERNATOR BELT	CINGHIA ALTERNATORE	COUROIE ALTERNATEUR
	TEN01317	ÁNODO	ANODE	ANODO	ANODE
4LH-WST, -WSTZY	REC127695-35150	FILTRO ACEITE	OIL FILTER	FILTRO OLIO	FILTRE D'HUILE
	REC121850-42280E	CORREA ALTERNADOR	ALTERNATOR BELT	CINGHIA ALTERNATORE	COUROIE ALTERNATEUR
6BY	REC165000-69590	FILTRO ACEITE	OIL FILTER	FILTRO OLIO	FILTRE D'HUILE
	REC120650-55040	FILTRO COMBUSTIBLE	FUEL FILTER	FILTRO COMBUSTIBILE	FILTRE CARBURANT
6CX-ETE	REC127695-35150	FILTRO ACEITE	OIL FILTER	FILTRO OLIO	FILTRE D'HUILE
	REC127695-55630	FILTRO COMBUSTIBLE	FUEL FILTER	FILTRO COMBUSTIBILE	FILTRE CARBURANT
	REC119593-18880	FILTRO AIRE	AIR FILTER	FILTRO ARIA	FILTRE D'AIRE
	REC128620-42201	IMPULSOR	IMPELLER	GIRANTE	TURBINE
	REC123682-48601	TERMOSTATO	THERMOSTAT	TERMOSTATO	THERMOSTAT
	REC25132-004250E	CORREA ALTERNADOR	ALTERNATOR BELT	CINGHIA ALTERNATORE	COUROIE ALTERNATEUR
6CX-GT	REC127695-35150	FILTRO ACEITE	OIL FILTER	FILTRO OLIO	FILTRE D'HUILE
	REC127695-55630	FILTRO COMBUSTIBLE	FUEL FILTER	FILTRO COMBUSTIBILE	FILTRE CARBURANT
	REC119593-18880	FILTRO AIRE	AIR FILTER	FILTRO ARIA	FILTRE D'AIRE
	REC128620-42201	IMPULSOR	IMPELLER	GIRANTE	TURBINE
	REC145640-48410	TERMOSTATO	THERMOSTAT	TERMOSTATO	THERMOSTAT
	REC25132-004250E	CORREA ALTERNADOR	ALTERNATOR BELT	CINGHIA ALTERNATORE	COUROIE ALTERNATEUR
	TEN01312	ÁNODO	ANODE	ANODO	ANODE
6CXM-ETE	REC127695-35150	FILTRO ACEITE	OIL FILTER	FILTRO OLIO	FILTRE D'HUILE
	REC127695-55630	FILTRO COMBUSTIBLE	FUEL FILTER	FILTRO COMBUSTIBILE	FILTRE CARBURANT
	REC119593-18880	FILTRO AIRE	AIR FILTER	FILTRO ARIA	FILTRE D'AIRE
	REC128620-42201	IMPULSOR	IMPELLER	GIRANTE	TURBINE
	REC123682-48601	TERMOSTATO	THERMOSTAT	TERMOSTATO	THERMOSTAT
	REC25132-004250E	CORREA ALTERNADOR	ALTERNATOR BELT	CINGHIA ALTERNATORE	COUROIE ALTERNATEUR
6GHA-ET	REC128633-35400	FILTRO ACEITE	OIL FILTER	FILTRO OLIO	FILTRE D'HUILE
	REC41650-501140	FILTRO COMBUSTIBLE	FUEL FILTER	FILTRO COMBUSTIBILE	FILTRE CARBURANT
	REC128628-42200	IMPULSOR	IMPELLER	GIRANTE	TURBINE
	REC145640-48410	TERMOSTATO	THERMOSTAT	TERMOSTATO	THERMOSTAT
	REC128610-77350	CORREA ALTERNADOR	ALTERNATOR BELT	CINGHIA ALTERNATORE	COUROIE ALTERNATEUR
	TEN01303	ÁNODO	ANODE	ANODO	ANODE
	TEN01301	ÁNODO	ANODE	ANODO	ANODE
	TEN01311	ÁNODO	ANODE	ANODO	ANODE
	TEN01312	ÁNODO	ANODE	ANODO	ANODE
6GHA-ST, STE 6GHAK-ST1 6GHAM-STE 6GHD-ST	REC126650-35220	FILTRO ACEITE	OIL FILTER	FILTRO OLIO	FILTRE D'HUILE
	REC41650-501140	FILTRO COMBUSTIBLE	FUEL FILTER	FILTRO COMBUSTIBILE	FILTRE CARBURANT
	REC128628-42200	IMPULSOR	IMPELLER	GIRANTE	TURBINE
	REC145640-48410	TERMOSTATO	THERMOSTAT	TERMOSTATO	THERMOSTAT
	REC128610-77350	CORREA ALTERNADOR	ALTERNATOR BELT	CINGHIA ALTERNATORE	COUROIE ALTERNATEUR
	TEN01303	ÁNODO	ANODE	ANODO	ANODE
	TEN01301	ÁNODO	ANODE	ANODO	ANODE
	TEN01311	ÁNODO	ANODE	ANODO	ANODE
	TEN01312	ÁNODO	ANODE	ANODO	ANODE
6KHL-ST	REC124626-35420	FILTRO ACEITE	OIL FILTER	FILTRO OLIO	FILTRE D'HUILE
	REC41650-502330	FILTRO COMBUSTIBLE	FUEL FILTER	FILTRO COMBUSTIBILE	FILTRE CARBURANT
	REC126630-42030	IMPULSOR	IMPELLER	GIRANTE	TURBINE
	REC145640-48410	TERMOSTATO	THERMOSTAT	TERMOSTATO	THERMOSTAT
	REC126634-11340	CORREA ALTERNADOR	ALTERNATOR BELT	CINGHIA ALTERNATORE	COUROIE ALTERNATEUR
	TEN01303	ÁNODO	ANODE	ANODO	ANODE
	TEN01301	ÁNODO	ANODE	ANODO	ANODE
	TEN01311	ÁNODO	ANODE	ANODO	ANODE
6LPA-DTP, -DTZP, -STP, -STZ 6LP-DT, -DTE, -DTZE, -DTZY, -ST, -STE, -STZE, -STZY, -WDT, -WDTZY	REC119770-90620	FILTRO ACEITE	OIL FILTER	FILTRO OLIO	FILTRE D'HUILE
	REC119773-55510	FILTRO COMBUSTIBLE	FUEL FILTER	FILTRO COMBUSTIBILE	FILTRE CARBURANT
	REC119593-18880	FILTRO AIRE	AIR FILTER	FILTRO ARIA	FILTRE D'AIRE
	REC13554-0001	IMPULSOR	IMPELLER	GIRANTE	TURBINE
	REC119773-49550	TERMOSTATO	THERMOSTAT	TERMOSTATO	THERMOSTAT
	REC119775-77260	CORREA ALTERNADOR	ALTERNATOR BELT	CINGHIA ALTERNATORE	COUROIE ALTERNATEUR
	TEN01317T	ÁNODO	ANODE	ANODO	ANODE
6LY2-ST	REC119593-35100 REC119593-35400	FILTRO ACEITE	OIL FILTER	FILTRO OLIO	FILTRE D'HUILE
	REC127695-55630	FILTRO COMBUSTIBLE	FUEL FILTER	FILTRO COMBUSTIBILE	FILTRE CARBURANT
	REC119195-18880	FILTRO AIRE	AIR FILTER	FILTRO ARIA	FILTRE D'AIRE
	CEF500162G	IMPULSOR	IMPELLER	GIRANTE	TURBINE
	REC127605-48590	TERMOSTATO	THERMOSTAT	TERMOSTATO	THERMOSTAT
	REC119593-42350	CORREA ALTERNADOR	ALTERNATOR BELT	CINGHIA ALTERNATORE	COUROIE ALTERNATEUR
	TEN01317T	ÁNODO	ANODE	ANODO	ANODE

	REF				
6LY2-STE	REC119593-35100 REC119593-35400	FILTRO ACEITE	OIL FILTER	FILTRO OLIO	FILTRE D'HUILE
	REC127695-55630	FILTRO COMBUSTIBLE	FUEL FILTER	FILTRO COMBUSTIBILE	FILTRE CARBURANT
	REC119195-18880	FILTRO AIRE	AIR FILTER	FILTRO ARIA	FILTRE D'AIRE
	CEF500162G	IMPULSOR	IMPELLER	GIRANTE	TURBINE
	REC127605-48590	TERMOSTATO	THERMOSTAT	TERMOSTATO	THERMOSTAT
	REC119593-42350	CORREA ALTERNADOR	ALTERNATOR BELT	CINGHIA ALTERNATORE	COUROIE ALTERNATEUR
6LY2-STVY	REC119593-35100 REC119593-35400	FILTRO ACEITE	OIL FILTER	FILTRO OLIO	FILTRE D'HUILE
	REC127695-55630	FILTRO COMBUSTIBLE	FUEL FILTER	FILTRO COMBUSTIBILE	FILTRE CARBURANT
	REC127605-48590	TERMOSTATO	THERMOSTAT	TERMOSTATO	THERMOSTAT
	TEN01317T	ÁNODO	ANODE	ANODO	ANODE
6LY2-STP	REC119593-35100 REC119593-35400	FILTRO ACEITE	OIL FILTER	FILTRO OLIO	FILTRE D'HUILE
	REC47-809866T	IMPULSOR	IMPELLER	GIRANTE	TURBINE
	TEN01317T	ÁNODO	ANODE	ANODO	ANODE
6LY2-STVY 6LY2A-STE, -UTP 6LY2M-WDT, -WST	REC119593-35100 REC119593-35400	FILTRO ACEITE	OIL FILTER	FILTRO OLIO	FILTRE D'HUILE
	TEN01317T	ÁNODO	ANODE	ANODO	ANODE
6LY2-WDT, -WDTZY, -WST	REC119593-35100 REC119593-35400	FILTRO ACEITE	OIL FILTER	FILTRO OLIO	FILTRE D'HUILE
	REC127695-55630	FILTRO COMBUSTIBLE	FUEL FILTER	FILTRO COMBUSTIBILE	FILTRE CARBURANT
	TEN01317T	ÁNODO	ANODE	ANODO	ANODE
6LY2A-STP	REC119593-35100 REC119593-35400	FILTRO ACEITE	OIL FILTER	FILTRO OLIO	FILTRE D'HUILE
	REC127695-55630	FILTRO COMBUSTIBLE	FUEL FILTER	FILTRO COMBUSTIBILE	FILTRE CARBURANT
	REC119195-18880	FILTRO AIRE	AIR FILTER	FILTRO ARIA	FILTRE D'AIRE
	REC119574-42550	IMPULSOR	IMPELLER	GIRANTE	TURBINE
	REC127605-48590	TERMOSTATO	THERMOSTAT	TERMOSTATO	THERMOSTAT
	TEN01317T	ÁNODO	ANODE	ANODO	ANODE
6LY3-ETP, -STP, -UTP	REC119593-35100	FILTRO ACEITE	OIL FILTER	FILTRO OLIO	FILTRE D'HUILE
	REC41650-502330	FILTRO COMBUSTIBLE	FUEL FILTER	FILTRO COMBUSTIBILE	FILTRE CARBURANT
	REC119195-18880	FILTRO AIRE	AIR FILTER	FILTRO ARIA	FILTRE D'AIRE
	REC119574-42550	IMPULSOR	IMPELLER	GIRANTE	TURBINE
	REC119593-42350	CORREA ALTERNADOR	ALTERNATOR BELT	CINGHIA ALTERNATORE	COUROIE ALTERNATEUR
	CMC272100-20030	ÁNODO	ANODE	ANODO	ANODE
6LYA-STE	REC119593-35100	FILTRO ACEITE	OIL FILTER	FILTRO OLIO	FILTRE D'HUILE
	REC41650-502330	FILTRO COMBUSTIBLE	FUEL FILTER	FILTRO COMBUSTIBILE	FILTRE CARBURANT
	REC119195-18880	FILTRO AIRE	AIR FILTER	FILTRO ARIA	FILTRE D'AIRE
	REC119574-42550	IMPULSOR	IMPELLER	GIRANTE	TURBINE
	TEN01316	ÁNODO	ANODE	ANODO	ANODE

SISTEMA DE ALIMENTACIÓN Y FILTRACIÓN
FUEL & FILTRATION SYSTEM
SISTEMA DI ALIMENTAZIONE E FILTRAZIONE
SYSTÈME D'ALIMENTATION ET DE FILTRATION

FILTRO DE COMBUSTIBLE Y ELEMENTOS — FUEL FILTERS AND ELEMENTS — FILTRI BENZINA E RACCORDI — FILTRE A ESSENCE ET CARTOUCHE DE RECHANGE

FILTRO GASOLINA — FUEL FILTER — FILTRO BENZINA — FILTRE À ESSENCE

REF	OEM	
REC119773-55510	119773-55510	6LPA-DTP, -DTZP, -STP, -STZ 6LP-DT, -DTE, -DTZE, -DTZY, -ST, -STE, -STZE, -STZY, -WDT, -WDTZY



REF	OEM	
REC129574-55711	129574-55711	**4JH2**-UTE **4JH3**-DTE, -HTE, -TE



REF	OEM	
REC127695-55630	127695-55630	6LY2M-WST, -WDT 6LY-ST, -STZY, -UT, -UTE, -UTM, -UTZY, -WST, -WSTZY, -WUT, -WUTZY 6CX-ETE, -GT 6CXM-ETE



REF	OEM	
REC121857-55710	121857-55710	4LH-HTE, -TE



REF	OEM	
REC129470-55703	129470-55703	3JH25A 3JH2E, L, -TCE 3JH3E-YEU-E 3JHAE 4JH2-DTE, E, -HTE, -TE 4JH4E, AE 4JH5E 4JH-DTE, E, -HTE, -HTZ, -HTZAE 6JH2



REF	OEM	
REC119802-55810	119802-55810	3JH5AE, E



REF	OEM	
REC41650-501140	41650-501140	6GHA-ET, -ST, -STE 6GHAK-ST1 6GHAM-STE 6GHD-ST



REF	OEM	
REC41650-502320	41650-502320	4JH-TZ 4LHA-DTE, -DTP, -DTZE, -DTZP, -HTE, -HTP, -HTZE, -HTZP, -STE, -STP, -STZE, -STZP 4LH-DTE, -DTZ, -HT, -HTZ, -HTZAY, -ST, -STE, -STZ, -STZAY, -UT, -UTZ, -UTZAY



REF	OEM	
REC41650-502330	41650-502330	6LY2A-STE, -STP, -UTP 6LY3-ETP, -STP, -UTP 6LYA-STE, -STP, -UTE 6LYM-UTE, -STE, -UTEHD 6LY-STE, -STM



REF	OEM	
REC104500-55710	104500-55710	1GM, L, Y-C 1GM10 2GM20, F, F-YEU, -YEU 2GMLP 3GM30, F, F-YEU 3HM, F 3HM35 3YM20 3YM27A 3YM30, A



new

REF	OEM	
REC120650-55040	120650-55040	4BY 6BY



REF	OEM	
REC120324-55760	120324-55760	6LY2M-WST, -WDT 6LY-ST, -STZY, -UT, -UTE, -UTM, -UTZY, -WST, -WSTZY, -WUT, -WUTZY, -STM



new



REF	OEM		
REC121370-55601	121370-55601 124790-55601	3YM, 30, 20, 15, 27A, 30R, 30AE 2QM, 15, 20 2YM15 3QM, 30 1GM, 2GM, 3GM	REC104500-55710

FILTRO CON CAZOLETA — BOWL FILTERS — FILTRO CON COPPA — FILTRE AVEC COUPE

DIESEL



RACOR



	RAC500MA30	RAC900VMA	RAC900MA30	RAC1000VMA	RAC1000MA30	RAC75/500MAX	RAC75/1000MA30
	227 l/h 60 gph	340 l/h 90 gph	341 l/h 90 gph	681 l/h 180 gph	681 l/h 180 gph	454 l/h 120 gph	681 / 1363 l/h 180 / 360 gph
	2010	**2010**	**2040**	**2010**	**2020**	**2010**	**2020**
A X B X C	292 x 147 x 122 mm	432 x 220 x 200 mm	432 x 152 x 178 mm	557 x 220 x 200 mm	559 x 152 x 178 mm	292 x 368 x 241 mm	559 x 476 x 279 mm
	3/4"-16 UNF	7/8"-14 UNF	7/8"-14 UNF	7/8"-14 UNF	7/8"-14 UNF	3/4"-16 UNF	7/8"-14 UNF
KG	2 kg	4,9 kg	3 kg	5,6 kg	5 kg	7,7 kg	13,6 kg
CAIDA DE PRESIÓN PRESSURE DROP CADUTA DI PRESSIONE CHUTE DE PRESSION	0.61 PSI 0.04 bar	0.30 PSI 0.021 bar	0.34 PSI 0.02 bar	0.43 PSI 0.03 bar	0.49 PSI 0.03 bar	0.70 PSI 0.05 bar	3.70 PSI 0.25 bar
MAX	15 PSI 1 bar	15 PSI 1 bar	15 PSI 1 bar	15 PSI 1 bar	15 PSI 1 bar	15 PSI 1 bar	15 PSI 1 bar
MÁX.	102 mm	127 mm	127 mm	254 mm	254 mm	102 mm	254 mm

ELEMENTOS DE RECAMBIO — ELEMENT — ELEMENTI DI RICAMBIO — CARTOUCHE DE RECHANGE

REF 500	REF 900	REF 1000	MICRON
RAC2010SM-OR	RAC2040SM-OR	RAC2020SM-OR	2
RAC2010TM-OR	RAC2040TM-OR	RAC2020TM-OR	10
RAC2010PM-OR	RAC2040PM-OR	RAC2020PM-OR	30

RACOR



S: SECUNDARIO
T: PRIMARIO O SECUNDARIO/FINAL
P: PRIMARIO

S: SECONDARY FINAL
T: PRIMARY OR SECONDARY FINAL
P: PRIMARY

S: SECONDARIO
T: PRIMARIO O SECONDARIO
P: PRIMARIO

S: SECONDAIRE
T: PRIMAIRE OU SECONDAIRE
P: PRIMAIRE

new

REF	OEM		MICRON
REC3581760	3581760	R500MA	30
REC889419	889419	R900MA	
REC889422	889422	R1000MA	

RECmar





REC3581760 REC889419 REC889422

FILTRO DECANTADOR DIESEL — COMPLETE DIESEL FILTER — FILTRO DECANTATORE DIESEL — FILTRE DECANTEUR DIESEL

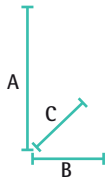

RACOR



	RAC120AS	RAC230R2	RAC245R2	RAC460R2	RAC490R2
	57 l/h 15 gph	114 l/h 30 gph	170 l/h 45 gph	227 l/h 60 gph	341 l/h 90 gph
	RACR12	RACR20	RACR25	RACR60	RACR90
DIESEL	✓	✓	✓	✓	✓
GAS	✓				
CAZOLETA TRANSPARENTE CLEAR BOWL VASCHETTA TRASPARENTE BOL TRASPARENT	✓	✓	✓	✓	✓
INSTALACIÓN VACUÓMETRO VACUUM INSTALLATION INSTALLAZIONE VACUOMETRO INSTALLATION VACUOMETRE	✓	✓	✓	✓	✓
INSTALACIÓN PRESIÓN PRESSURE INSTALLATION INSTALLAZIONE PRESSIONE INSTALLATION PRESSION	✓	✓	✓	✓	✓
A X B X C (mm)	165 x 81 x 81	229 x 102 x 102	267 x 102 x 102	279 x 114 x 121	300 x 114 x 121
KG	0,59 kg	0,90 kg	1 kg	1,3 kg	1,4 kg
CAIDA DE PRESIÓN PRESSURE DROP CADUTA DI PRESSIONE CHUTE DE PRESSION	0.15 PSI 0.01 bar	0.31 PSI 0.02 bar	0.61 PSI 0.04 bar	0.39 PSI 0.03 bar	0.95 PSI 0.06 bar
MAX	7 PSI	30 PSI	30 PSI	30 PSI	30 PSI
	1/4" NPT	1/4" NPT	1/4" NPT	3/8" NPT	3/8" NPT
BOMBA CEBADO (SÓLO PARA DIESEL) PRIMER PUMP (ONLY DIESEL) POMPA (SOLO PER DIESEL) POMPE (SEULEMENT POUR DIESEL)	✘	✓	✓	✓	✓
Nº TOMAS NUM. OF PORTS N° FORI N° D'ENTREE / SORTIE	4	3	3	4	4
OPCIÓN SENSOR AGUA WATER SENSOR OPTION OPZIONE SENSORE ACQUA OPTION SONDE DE PRESENCE D'EAU	✓	✓	✓	✓	✓

ELEMENTOS DE RECAMBIO — ELEMENT — ELEMENTI DI RICAMBIO — CARTOUCHE DE RECHANGE

REF	MICRON
RACR11T	10



REF	MICRON
RACR12S	2
RACR12T	10
RACR12P	30



REF	MICRON
RACR20S	2
RACR20T	10
RACR20P	30



REF	MICRON
RACR24S	2
RACR24T	10
RACR24P	30



REF	MICRON
RACR25S	2
RACR25T	10
RACR25P	30



REF	MICRON
RACR26S	2
RACR26T	10
RACR26P	30



REF	MICRON
RACR60S	2
RACR60T	10
RACR60P	30



REF	MICRON
RACR90S	2
RACR90T	10
RACR90P	30

REF	MICRON
RACR120SM	2
RACR120TM	10
RACR120P	30



FILTRO DECANTADOR DIESEL — COMPLETE DIESEL FILTER — FILTRO DECANTATORE DIESEL — FILTRE DECANTEUR DIESEL

new

RECmar®



REF	MICROM		2 x / 2 x	
REC1766160	10	205-420 L/H (2.45PSI)	11/16" 10 mm	REC160ELEMENT

new

RECmar®



REF	OEM			
REC500MA	22677639 35-850481 35-850481A1	RAC913-08-H6 (13 mm) RAC913-08-H8 (10 mm)	227 l/h	REC3581760 RAC2010TM-OR

new

RECmar®



REF		
REC296TWIN	50 L/H	REC3581078

new

RECmar®



REF			CUBETA BOWL VASCHETTA SEAU	
REC2656613	50 l/h	G30432 (8mm) GS30433 (10 mm)	METAL.	REC3581078

new

RECmar®

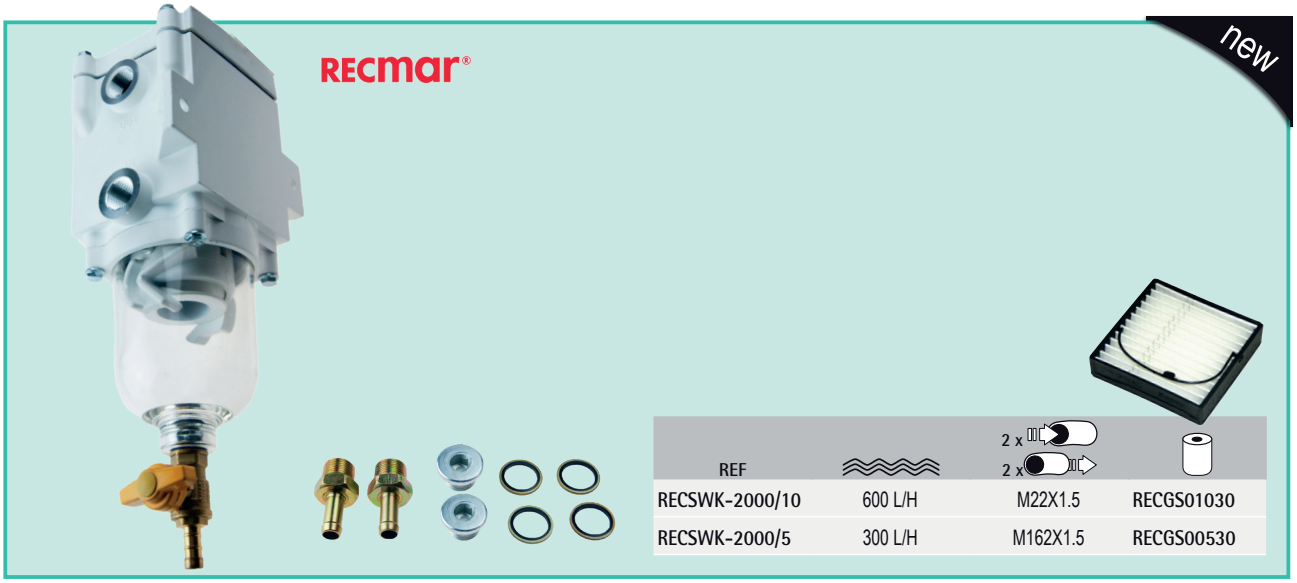

REF		2 x / 2 x	
RECSWK-2000/10	600 L/H	M22X1.5	RECGS01030
RECSWK-2000/5	300 L/H	M162X1.5	RECGS00530

FILTRO DE ACEITE OIL FILTER FILTRO OLIO FILTRE A HUILE

REF	OEM	
REC126650-35350	126650-35350	6GHA-ST, -STE 6GHAK-ST1 6GHAM-STE 6GHD-ST



REF	OEM	
REC119770-90620	119770-90620	6LPA-DTP, -STZ, -STP 6LPS-DTZP 6LP-DT, -DTE, -DTZE, -DTZY, -ST, -STE, -STZE, -STZY, -WDT, -WDTZY



REF	OEM	
REC119305-35151	119305-35151	1GM, Y-C 1GM10 2GM20, F, F-YEU, -YEU 2GMLP, SZK 3GM30, F, F-YEU 3JH2, E, L, -YCE 3JH3-YEU-E 3JH4E 3JH5, AE 3YM20 3YM30



REF	OEM	
REC119005-35100	119005-35100 119005-35151 109005-35170	4LH-HTE, -TE



REF	OEM	
REC119593-35100	119593-35100	6LY3-ETP, -STP, -UTP 6LYA-STE, -STP, -UTE 6LYM-UTE, -STE, -UTEHD 6LY2-ST, -STE, -STVY, -STP, -WDT, -WDTZY, -WST 6LY2A-STE, -STP, -UTP 6LY2M-WDT, -WST 6LY-ST, -STE, -STM, -STZY, -UT, -UTE, -UTM, -UTZY, -WST, -WSTZY, -WUT, -WUTZY



REF	OEM	
REC119593-35400	119593-35400	6LY2-ST, -STE, -STVY, -STP, -WDT, -WDTZY, -WST 6LY2A-STE, -STP, -UTP 6LY2M-WDT, -WST 6LY-ST, -STE, -STM, -STZY, -UT, -UTE, -UTM, -UTZY, -WST, -WSTZY, -WUT, -WUTZY



REF	OEM	
REC124550-35110	124550-35110 124085-35113	3HM, F 3HM35



REF	OEM	
REC127695-35150	127695-35150 127695-35160	4LHA-DTE, -DTP, -DTZE, -DTZP, -HTE, -HTP, -HTZE, -HTZP, -STE, -STP, -STZE, -STZP 4LH-DTE, -DTZ, -HT, -HTZ, -HTZAY, -ST, -STE, -STZ, -STZAY, -UT, -UTZ, -UTZAY, -WST, -WSTZY 6CX-ETE, -GT 6CXM-ETE



YANMAR

RECAMBIOS MARINOS

REF	OEM	
REC129150-35153	129150-35153 129150-35170	2JH2-DTE 3JH25A 4JH, -DTE, E, -HTE, -HTZ, -HTZAE, -TE, -TZ 4JH2E, -HTE, -TE, -UTE 4JH3-HTE, -TE 4JH4E, AE 4JH5E



REF	OEM	
REC128633-35400	128633-35400	6GHA-ET



JUNTAS BOMBA ACEITE — OIL PUMP GASKETS — GUARNIZIONE POMPE OLIO — JOINT POMPE D'HUILE

REF	OEM	
REC128170-32030	128170-32030	1GM, L, Y-C 1GM10



REF	OEM	
REC121450-32021	121450-32021	2GM20, F 2GM 2GM50F-YEU 3GM30, F, F-YEU 3GM



REF	OEM	
REC119000-32020	119000-32020	4LH-TE, -HTE, -DTE, -STE, -HT, -HTZ, -HTZAY, -DTZ, -UT, -UTZAY, -UT2, -ST, -STZAY, -STZ, -WST, -WSTZY 4LHA-STE, -STP 4LHS-STZE, -STZP, -DTE, -DTP, -DTZE, -DTZP, -HTE, -HTP, -HTZE, -HTZP



REF	OEM	
REC129120-35121	129120-35121	3JH3, E, E-YEU-E

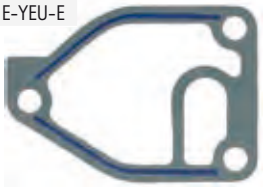

REF	OEM	
REC129470-35040	129470-35040	3JH2, -TCE, E, L 3JH3, E-YEU-E 4LH-TE, -HTE, -DTE, -STE, -HT, -HTZ, -HTZAY, -DTZ, -UT, -UTZAY, -UT2, -ST, -STZAY, -STZ, -WST, -WSTZY 4LHA-STE, -STP 4LHS-STZE, -STZP, -DTE, -DTP, -DTZE, -DTZP, -HTE, -HTP, -HTZE, -HTZP



REF	OEM	
REC129150-35042	129150-35042	3JH25A 3JH40 3JH4E 4JH



JUNTA SOPORTE FILTRO DE ACEITE — OIL FILTER SUPPORT GASKET — GUARNIZIONE SUPPORTO FILTRO OLIO — JOINT SUPPORT FILTRE D'HUILE

REF	OEM	
REC129470-35121	129470-35121	3JH2, -TCE, E, L 3JH3, E-YEU-E 4LH-TE, -HTE, -DTE, -STE, -HT, -HTZ, -HTZAY, -DTZ, -UT, -UTZAY, -UT2, -ST, -STZAY, -STZ, -WST, -WSTZY 4LHA-STE, -STP 4LHS-STZE, -STZP, -DTE, -DTP, -DTZE, -DTZP, -HTE, -HTP, -HTZE, -HTZP



FILTRO DE AIRE — AIR FILTER — FILTRO ARIA — FILTRE AIRE

REF	OEM	
REC128170-12540	128170-12540	1GM 1GML



REF	OEM	
REC128270-12540	128270-12540	2GM, LP, SZK 2GM20F, F-YEU, -YEU 3GM30, F, F-YEU 3YM20 3YM30, AE



REF	OEM	
REC119195-18880	119195-18880	4LHA-DTE, -DTP, -DTZE, -DTZP, -HTE, -HTP, -HTZE, -HTZP, -STE, -STP, -STZE, -STZP 6LY2-ST, -STE



REF	OEM	
REC119593-18880	119593-18880	6CX-ETE 6LPA-DTP, -DTZP, -STP, -STZ 6LP-DT, -DTE, -DTZE, -DTZY, -ST, -STE, -STZE, -STZY, -WDT, -WDTZY 6LY2-STVY, -WDT, -WDTZY, -WST, A-STE, A-STP, A-UTP 6LY2M-WDT, -WST 6LY3-ETP, -STP, -UTP 6LYA-STE, -STP, -UTE 6LYM-UTE, -STE, -UTEHD 6LY-ST, -STE, -STM, -STZY, -UT, -UTE, -UTM, -UTZY, -WST, -WSTZY, -WUT, -WUTZY



REF	OEM	
REC124770-12540	124770-12540	3HM, F 3HM35

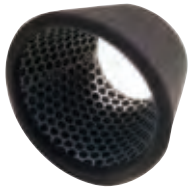

REF	OEM	
REC129470-12330	129470-12330	3JH2-TCE 4JH2-DTE, E, -TE, -UTE 4JH3-DTE, -HTE, -TE 4JHE, -TE, -TZ



REF	OEM	
RECXN199611	XN199611	4LH-DTE, -DTZ, -HT, -HTE, -HTZ, -HTZAY, -STE, -TE



REF	OEM	
REC127692-18880	127692-18880	6CX-GT 6CXM-ETE



MANGUERA CARBURANTE — FUEL HOSE — TUBO DI CARBURANTE — TUYAU DU CARBURANT

Tubo de goma para el transporte de carburante (diesel o gasolina). Construida en goma negra (NBR). Contenido aromático no superior al 60%. Resistente a la abrasión de los agentes marinos.

Long length rubber hose, suitable for loading diesel, bio-diesel and unloaded fuel for marine pleasure craft inboard engines up to 24 m.

Tubo in gomma per il passaggio di carburante (diesel o benzina). In gomma nera (NBR). Per motori entrobordo su imbarcazioni da diporto fino a 24m.

Tuyau en caoutchouc pour le passage du carburant (diesel ou essence). Caoutchouc noir (NBR). Pour moteurs in-bord sur bateaux de plaisance jusqu'à 24m.

CARBO/7840/A1

REF	Ø (mm)					Lloyd's Register
GS35049	6x16	14 bar	35 mm		40 m	
GS35050	8x17	14 bar	50 mm		40 m	
GS35051	10x19	14 bar	60 mm		40 m	
GS35052	12x22	10 bar	75 mm	-30ºC ~ 100ºC	30 bars 20 m	Rina CE 0474 Lloyd's Register 96/00/127
GS35053	16x26	10 bar	100 mm		40 m	
GS35054	19x30	10 bar	115 mm		20 m	
GS35055	25x37	10 bar	250 mm		x m	

SAE J 1527 - 2004
USCG A1 R1
ISO 7840 A-1 2004 CE



De goma para diesel y gasolina sin plomo. Ideal para fueraborda. Refuerzos texiles internos. Muy flexible. Contenido aromático 50%.

Rubber Hose suitable for loading mineral oils, diesel and unloaded fuel

In gomma per diesel e benzina senza piombo. Ideale per motori fuoribordo. Tessuto interno rinforzato. Molto flessibile.

En caoutchouc pour diesel et essence sans plomb. Idéal pour les moteurs hors-bord. Tissu intérieur renforcé. Très flexible.

CARBUPOMP/10NL

REF	Ø (mm)				
GS35031	6x12	10 bar	50 mm	-25ºC ~80º C	50 m
GS35032	8x15	10 bar	65 mm		50 m



ISO R1307

Manguera para lineas de combustible. Con refuerzo termoplástico que le permite excelente flexibilidad y resistencia a los rayos UV. Color gris. Resistente al alcohol. Especialmente indicado para motores fueraborda.

Marine fuel hose for outboards. Fuel resistant thermo-plastic formulation with 2 spiral reinforcement provides excelent bendability and resistance to UV, aging and permeation by all marine fuels (gasoline/petrol and diesel) including alcohol blends.

Tubi per il condotto del carburante. Con rinforzo termoplastico che gli permette un'eccellente flessibilità e resistenza ai raggi UV. Resistente alle miscele di alcool. Indicato per motori fuoribordo.

Tuyau de carburant marin. La formulation thermoplastique avec 2 renforts en spirale offre une excellente flexibilité et résistance aux UV, au vieillissement et à la perméation de tous les carburants marins (essence et diesel), y compris les mélanges d'alcool.

REF	Ø		
TRI305-0566	8 mm 5/16"	15 m	1
TRI305-0386	10 mm 3/8"	15 m	1

SAEJ 1527
ISO-8469 B1

CE CERTIFIED

GARANTÍA • WARRANTY • GARANZIA 3 AÑOS YEARS ANNI



TRIDENT

RACORS RACORS RACCORDI RACCORDS

REF		
GS30430	8 mm	2
GS30431	10 mm	2

GOLDENSHIP



ORIENTABLES
GUIDEBLE
ORIENTABILE
ORIENTABLE

REF		
GS30432	8 mm	2
GS30433	10 mm	2

GOLDENSHIP



REF				
RAC1/2X16	1/2"	16 mm	500 900 1000	1
RAC1/2X18	1/2"	18 mm		1
RAC1/2X20	1/2"	20 mm		1
RAC3/8X10	3/8"	10 mm		1
RAC3/8X12	3/8"	12 mm		1
RAC3/8X14	3/8"	14 mm		1

RACOR



REF	NPT			
BRA125-3/16x1/4	1/4"	3/16"		1
BRA125-1/4x1/2	1/2"	1/4"		1
BRA125-5/16x3/8	3/8"	5/16"		1
BRA125-3/8x3/8	3/8"	3/8"		1
BRA125-3/8x1/2	1/2"	3/8"		1
BRA125-1/2x3/8	3/8"	1/2"		1
BRA125-1/2x1/2	1/2"	1/2"		1
BRA125-1/2x3/4	3/4"	1/2"		1
BRA125-5/8x3/8	3/8"	5/8"		1
BRA125-5/8x3/4	3/4"	5/8"		1
BRA125-3/4x3/4	3/4"	3/4"		1
BRA125-1x3/4	3/4"	1"		1
BRA125-1/4X3/8	1/4"	3/8"		1



REF	NPT	NPT		
RAC1/2F-1/2M	7/8"	1/2"	900 1000	1
RAC3/8F-3/8M	3/4"	3/8"	500	1

RACOR



REF			
GS31066	1/4" NPT	5/16" = 7.9 mm	2
GS31055	3/8" NPT	3/8" = 9.5 mm	2
GS31056	3/8" NPT	5/16" = 7.9 mm	2

GOLDENSHIP



ACCESORIOS PARA FILTROS | FILTER ACCESSORIES | ACCESSORI PER FILTRI | ACCESSORIES POUR FILTRES

LLAVES PARA FILTRO | FILTER KEY | CHIAVE DA FILTRO | CLÉ À FILTRE

REF
RACRK22628

RACOR



REF	
REC70720	65 - 110 mm

RECMAR

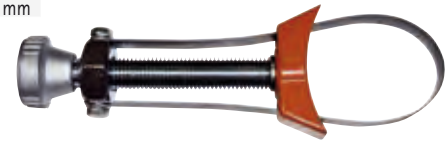

VÁLVULA DRENAJE AGUA DE FILTROS RACOR | DRAIN VALVE FOR RACOR FILTERS | VALVOLA DRENAGGIO ACQUA PER FILTRI RACOR | VANNE DE DRAINAGE D'EAU POUR FILTRE RACOR

REF
RACRK19492UL

RACOR



new

REF		
REC500MACON	500	3/8" = 10 mm



SENSOR DE AGUA PARA FILTROS DIESEL | WATER SENSOR FOR DIESEL FILTERS | SENSORE ACQUA PER FILTRI DIESEL | SONDE DE PRESENCE D'EAU POUR DIESEL

REF
RECRK21069

RECMAR



RELOJ SENSOR DE AGUA | WATER ALARM | ALLARME SENSORE ACQUA | ALARME SENSOR D'EAU

REF
RACRK20726

RACOR



BOMBA COMBUSTIBLE MECÁNICA | MECHANICAL FUEL PUMP | POMPA COMBUSTIBILE MECCANICA | POMPE CARBURANT MÉCANIQUE

new

REF	OEM	
REC129158-52101	129158-52101	3JH 4JH 3YM



new

REF	OEM	
REC105582-52010	105582-52010	1GM 1GM10 2WM 2QM20 3QM 3QM30 SB SBF (12)

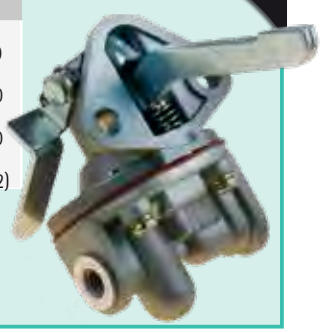

TUBO TURBO TURBINE TURBO

	TURBO	REF	OEM		
4LH-HTE 4LH-TE	MY58	REC119171-18010	119171-18010	REC128300-13230	
4LH-DTE	53269886292	REC119173-18011	119173-18011		
4JH3-T	MYCZ	REC129671-18001	129671-18001	REC129472-18090	
4LH-STE	MYAV	REC119195-18031	119195-18031	REC128300-13230	
4LHA-DTZE 4LHA-DTE 4LHA-DTP	MYDH	REC119173-18041	119173-18041	REC128300-13230	

	TURBO	REF	OEM		
4LH-HTE	MYBF	**REC119172-18011**	119172-18011	**REC128300-13230**	
4JH-TE	MY29	**REC129497-18000**	129497-18000	**REC129472-18090**	
4JH-DTE	MY34	**REC129473-18000**	129473-18000	**REC129472-18090**	
4LHA-STP 4LHA-STE	MYDA	**REC119175-18031**	119175-18031	**REC128300-13230**	
4LHA-HTE	MYDN	**REC119172-18030**	119172-18030	**REC128300-13230**	

	TURBO	REF	OEM		
4JH-HTE, DTE 4JH2-HTE	MYBD, MYBDE	**REC129474-18001**	129474-18001	REC129472-18090	
4JH3-DTE, DT, DTZ, DTZAY, DTZA, HTE	MYBG, MYBGE	**REC129693-18001**	129693-18001 129693-18000	REC129472-18090	
6LP-DTE, DTZE, WDTZY, WST, WSTZY, WDT, DT 6LPA-DTEP, DTZEP, DTZEP1	MYAX	**REC119773-18010**	119773-18010	REC128300-13230	
6LP- STE, STZE, STZY, STZE1, STZYJ 6LPA-STE, STZE, STZEP1	MYBHE	**REC119775-18010**	119775-18010	REC128300-13230	
6LY3-STC, ETP, UTC, UTP, STP 6LY400 CN/ 6LY440CN	MYEM	**REC119578-18010**	119578-18010		
6LYA-STE(P), STP	MYDW	**REC119574-18020**	119574-18020		

new

SENSORES | SENSORS | SENSORE | CAPTEURS

SENSOR PRESIÓN DE ACEITE | OIL PRESSURE SENDER | SENSORE PRESIONE OLIO | SONDE PRESSION D'HUILE

REF	OEM	
REC124060-39452	124060-39452 124060-3945	1GM / 2GM / 3GM Serie 3HM / 3HMF 4JH / 4LH Series



SENSOR TEMPERATURA AGUA | WATER TEMPERATURE SENDER | SENSORE TEMPERATURA ACQUA | SONDE TEMPERATURE DE L'EAU

REF	OEM	
REC127610-91350	127610-91350	2GM20F 2GMF-YEU 3GM30F, F-YEU, 3HMF 3JH25A 3JH2, E, L, -TCE 3JH3 4CH-DT 4JH, -TZ 4JH2E, -DTE, -HTE, -TE, -UTE 4JHA-DTE 4LHA-DTP, -DTZE, -DTZP, -HTE, -HTP, -HTZE, -HTZP, -STE, -STP, -STZE, -STZP 4LH-DTE, -DTZ, -HT, -HTE, -HTZ, -HTZAY, -ST, -STE, -STZ, -STZAY, -TE 6CX-ETE, M-ETE, 6GHA-ET, -ST, -STE 6GHAK-ST1, 6GHAM-STE 6GHD-ST 6KHL-ST 6LPA-DTP, -STP, -STZ 6LP-DT, -DTE, -DTZE, -DTZY, -ST, -STE, -STZE, -STZY, WDT, -WDTZY 6LY2-ST, -WDT, -WDTZY, -WST 6LY2A-STE, -STP, -UTP 6LY2M-WDT, -WST 6LYA-STE, -STP, -UTE 6LYM-UTE, -STE 6LY-ST, -STE, -STM, -STZY, -UT, -UTE, -UTM, -UTZY, -WST, -WSTZY, -WUT, -WUTZY



REF	OEM	
REC128275-91340	128275-91340	1GM, L, Y-C 1GM10 2GM20, -YEU 2GM, LP, SZK 3GM30 3HM 3HM35



REF	OEM	
REC120130-91370	120130-91370	3JH4E 3JH5AE, E 4JH3-DTE, -HTE, -TE 4JH4AE 4JH5E 4JHE 4JH-HTE, -HTZ, -HTZAE, -TE



MOTORES DE ARRANQUE — STARTERS — MOTORINI AVVIAMENTO — DÉMARREUR

REF	OEM			
REC124250-77012	124250-77012 129573-77010 171008-77010 171006-77010 121256-77011 124450-77011 124772-77010 124772-77020	12V 1.4 kW	15 BENDIX	3HM, F 3HM35 3JH2, E, L, TCE 3JH25A 3JH3 4JH, E, -HTE, -HTZ, -HTZAE, -TE, -TZ, -DTE 4JH2-DTE, E, -HTE, -TE, -UTE 4JH3-DTE, -HTE, -TE



REF	OEM			
REC128170-77010	128170-77010 128170-77010D	12V 1.0 kW	9 BENDIX	1GM 2GM20F, F-YEU, -YEU 3GM30, F, F-YEU



REF	OEM			
REC114362-77011	114362-77011 114362-77010 114361-77011 114399-77010	12V 0.8 kW	8 BENDIX	L40S L60S



REF	OEM			
REC129698-77010	129698-77010 129608-77010 129242-77010 121370-77010	12V 1.4 kW	11 BENDIX	1GM10 2GM20 3JH3, E-YEU-E, E 3QM 3QM30, F, H 2QM20



REF	OEM			
REC119773-77010	119773-77010	12V 2.5 kW	12 BENDIX	6LPA-DTP, -DTZP, -STP, -STZ 6LP-DT, , -DTE, -DTZE, -DTZY, -ST, -STE, -STZE, -STZY, -WDT, -WDTZY



REF	OEM			
REC121254-77012	121254-77010 121254-77011 121254-77012 121254-77019 129429-77010 129429-77011 171058-77010	12V 2.5 kW	15 BENDIX	4LHA-DTE, -DTP, -DTZE, -DTZP, -HTE, -HTP, -HTZE, -HTZP, -STE, -STP, -STZE, -STZP 4LH-DTE, -DTZ, -HT, -HTE, -HTZ, -HTZAY, -ST, -STE, -STZ, -STZAY, -TE, -UT, -UTZ, -UTZAY



REF	OEM			
REC104211-77011	104211-77011 104211-77010	12V 1.0 kW	9 BENDIX	SB8 SVE8 YSE8 YSM8 YSM10 YSE10 SVE12 SB12



ALTERNADORES ALTERNATORS ALTERNATORI ALTERNATEURS

ALTERNADORES ALTERNATORS ALTERNATORI ALTERNATEUR

REF	OEM			REG.
REC119836-77201	119836-77200 119836-77201 119612-77230 129930-77211	12V 40 A	SIMPLE - SERPENTÍN SIMPLE - GROOVE PULLEY SEMPLICE - SERPENTINA SIMPLE - SERPENTINE	INTERNO INTERNAL INTERNO INTERNE

Tipo Hitachi
Type Hitachi
Scrivi Hitachi
Type Hitachi



REF	OEM				REG.
REC119573-77201	119573-77200 119573-77201 129470-77200 129772-77200	12V 80 A	2GM20, F, F-YEU, -YEU 3JH4E 3JH5AE, E 3YM20 4JH2-DTE, E, -HTE, -TE, -UTE 4JH3-DTE, -HTE, -TE 4JH4E, AE 4JH5E 4JH-DTE, E, -HTE 4LHA-DTE, -DTP, -DTZE, -DTZP, -HTE, -HTP, -HTZE, -HTZP, -STE, -STP, -STZE, -STZP 4LH-DTE, -DTZ, -HT, -HTE, -HTZ, -HTZAY, -ST, -STE, -STZ, -STZAY, -TE, -UT, -UTZ, -UTZAY 6LY-STE, -STM, -STZY, -UT, UTE, -UTM, -UTZY 6LYA-STE, -STP, -UTE 6LYM-UTE, -STE	SIMPLE SIMPLE SEMPLICE SIMPLE	INTERNO INTERNAL INTERNO INTERNE



REF	OEM				REG.
REC128270-77200	128270-77200 128270-77201 128270-77202 128171-77200	12V 35 A	1GM10 1GML, Y-C 2GM20 2GMLP, SZH 3HM, F 3JH2, E, L, -TCE 3JH25A 3JH3 4JH, -HTZ, -HTZAE, -TE, -TZ	SIMPLE SIMPLE SEMPLICE SIMPLE	INTERNO INTERNAL INTERNO INTERNE



REF	OEM				REG.
REC119773-77201	119773-77200 119773-77201	12V 80 A	6LPA-DTP, -DTZP, -STP, -STZ 6LP-DT, -DTE, -DTZE, -DTZY, -ST, -STE, -STZE, -STZY, -WDT, -WDTZY, -WST, -WSTZY, -DTZE1, -STZE1 6LPA-STP2, -STZP2, -STZP3, -DTZEP1, -STZEP1, -STZYJ	DOBLE DOUBLE DOPPIA DOUBLE	INTERNO INTERNAL INTERNO INTERNE

Tipo Nippondenso.
Type Nippondenso.
Tipo Nippondenso.
Type Nippondenso



CORREAS BELTS CINGUIE COURROIE

REF	OEM		UNIDADES X ALTERNADOR UNITS X ALTERNATOR UNITÀ X ALTERNATORE UNITÉS X ALTERNATEUR
REC25132-003000	25132-003000	2GMSZK	
REC25132-003100	25132-003100	2GM20, -YEU 2GMLP	
REC25132-003700	25132-003700	2GM20F, F-YEU 3GM30, F-YEU	
REC128670-77350	128670-77350	3HM	
REC129612-42290E	129612-42290E	3YM20	
REC129940-42310E	129940-42310E	3JH3E-YEU-E 3JH4E	
REC128170-77350	128170-77350	1GM10 1GML 3GM 3HMF	
REC25132-004500	25132-004500	3JH2, E, L, -TCE 3JH25A 3JH3 4JH, -HTE, -HTZ, -HTZAE, -TE, -TZ	
REC25152-004300	25152-004300	3JH5AE, E 4JHAE 4JH4E, AE 4JH5E	
REC25132-004600	25132-004600	4JH2-DTE, E, -HTE, -TE, -UTE 4JH3, -TE, -HTE 4JH-DTE	
REC121850-42280E	121850-42280E	4LHA-DTE, -DTP, -DTZE, -DTZP, -HTE, -HTP, -HTZE, -HTZP, -STE, -STP, -STZE, -STZP 4LH-DTE, -DTZ, -HT, -HTE, -HTZ, -HTZAY, -ST, -STE, -STZ, -STZAY, -TE, -UT, -UTZ, -UTZAY, -WST, -WSTZY	
REC119593-42280E	119593-42280	6LYA-STE, -UTE, -STP 6LY2A-STP, -UTP 6LY2M-WDT, -WST 6LYM-UTE, -STE, -UTEHD 6LY-STE	
REC119593-42350	119593-42350	6LY2-STVY, -WDT, -WDTZY, -WST 6LY-ST, -STM, -STZY, -UT, -UTE, -UTM, -UTZY, -WST, -WSTZY, -WUT, -WUTZY	
REC25132-002700	25132-002700	6GHA-ET, -ST, -STE 6GHAK-ST1 6GHAM-STE 6GHD-ST	2
REC25132-004250E	25132-004250	6CX-ETE, -GT, M-ETE	2
REC119775-77260	119775-77260 119773-77250	6LPA-DTP, -DTZP, -STP, -STZ 6LP-DT, -DTE, -DTZE, -DTZY, -ST, -STE, -STZE, -STZY, -WDT, -WDTZY	2



SOLENOIDES Y RELÉS | SOLENOID & RELAY | SOLENOIDI E RELÉ | SOLENOID ET RELAIS

SOLENOIDE DE PARO | STOP SOLENOID | SOLENOIDI STOP | SOLENOIDE STOP

REF	OEM		
REC129271-77950	129271-77950	3JH/5E, 5EA 4JH/5E, 4E, 4AE 3YM/30, 27, 30R, 20, 27A, 30AE, 30R 2YM15	12V

new



REF	OEM		
REC876614	119171-67200	4JH & 4LH	12V

new

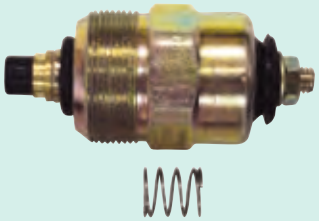

RELÉ | RELAY | RELÉ | RELAIS

REF	OEM	
REC124617-91850	124617-91850	12V

new



REF	OEM		
REC128990-77911	128990-77911 128990-77910	4JH 3YM 3JH 2YM	12V

new



REF	OEM		
REC128990-77550	128990-77550 120270-77511	4JH 3YM 3JH 2YM	12V

new



SISTEMA DE REFRIGERACIÓN
COOLING SYSTEM
SISTEMA DI RAFFREDDAMENTO
SYSTÈME DE REFROIDISSEMENT

TERMOSTATO — THERMOSTAT

REF	OEM	°C	
REC105582-49200	105582-49200 181130-49200 124223-49250	42	1GM, L, Y-C 1GM10 2GM20, -YEU 2GMSZK 3GM30 3HM 3HM35



REF	OEM	°C	
REC121750-49800	121750-49800	71	2GM20F, F-YEU 3GM30F, F-YEU 3HMF 3YM30AE 4JH2-DTE



REF	OEM	°C	
REC128990-49800	128990-49800	71	3YM20 3YM27A 3YM30



REF	OEM	°C	
REC129470-49801	129470-49801	76,5	3JH2M, E, L, -TCE 3JH25A 3JH3, E-YEU-E 3JH4E 3JH5AE, E 4JH 4JH2E, -HTE, -TE, -UTE 4JH3-DTE, -HTE, -TE 4JH4E, AE 4JH5E 4JHE, -HTE, -HTZ, -HTZAE, -TE, -TZ



REF	OEM	°C	
REC121850-49811	121850-49811	71	4LHA-DTE, -DTP, -DTZE, -DTZP, -HTE, -HTP, -HTZE, -HTZP, -STE, -STP, -STZE, -STZP 4LH-DTE, -DTZ, -HT, -HTE, -HTZ, -HTZAY, -STE, -TE, -UT



REF	OEM	°C	
REC119773-49550	119773-49550	70	6LPA-DTP, -DTZP, -STP, -STZ



REF	OEM	°C	
REC127605-48590	127605-48590	71	6LY2-ST, -STE, -STVY, -WDT, -WDTZY, -WST 6LY2A-STE, -STP, -UTP 6LY2M-WDT, -WST 6LY3-ETP, -STP, -UTP



REF	OEM	°C	
REC145640-48410	145640-48410	71	6CX-GT 6GHA-ET, -ST, -STE 6GHAK-ST1 6GHAM-STE 6GHD-ST 6KHL-ST



REF	OEM	°C	
REC119593-49550	119593-49550	76,5	6LYM-UTE, -STE, -UTEHD 6LY-ST, -STE, -STM, -STZY, -UT, -UTE, UTM, -UTZY, -WST, -WSTZY, -WUT, -WUTZY



YANMAR

RECAMBIOS MARINOS

REF	OEM	
REC165000-69950	165000-69950	4BY 6BY



JUNTAS CUERPO DE TERMOSTATO | THERMOSTATO HOUSING, GASKET | GUARNIZIONE CORPO TERMOSTATO | JOINT CORS DE THERMOSTAT

REF	OEM	
REC121450-44411	121450-44411 121450-44410	1GM, L, Y-C 1GM10 2GM20, F, F-YEU, -YEU 2GM, LP 3GMD, F 3GM30, F, F-YEU



JUNTAS TAPA DE TERMOSTATO | THERMOSTATO COVER, GASKET | GUARNIZIONE COPERCHIO TERMOSTATO | JOINT COUVERCLE DE THERMOSTAT

REF	OEM	
REC104211-49160	104211-49160	1GM, L, Y-C 1GM10 2GM20, F, F-YEU, -YEU 2GM, LP 3GMD, F 3GM30, F, F-YEU



REF	OEM	
REC129350-49541	129350-49541 129350-49540	2GMLP



REF	OEM	
REC129795-49551	129795-49551	3JH 4JH



BOMBAS ASPIRACIÓN AGUA MARINA | RAW MARINE WATER PUMPS | POMPE ASPIRAZIONE ACQUA MARINA | POMPE D'EAU MARINE

BOMBAS DE AGUA | WATER PUMPS | POMPE ACQUA | POMPE D'EAU

REF	OEM		REF. JOHNSON	
REC119574-42502	119574-42502 119574-42501 119574-42500	6LY2-ST, -STVY, -STE, -WST, -WDT, -WDTZY 6LY2A-STP, -UTP 6LYA-STP, -STE, -UTE 6LY2M-WDT, -WST	10-13170-01	REC119574-42550



REF	OEM		REF. JOHNSON		
REC129271-42502	129271-42502 129271-42501 129271-42500	3JH4E 3JH5A, AE, E 3JH40 4JH4AE, E 4JH5E 4JH80 4JH110 4JH45 4JH57	10-13328-03	REC21213660	REC129150-01881



REF	OEM		REF. JOHNSON		
REC128397-42500	128397-42500 128377-42500 121575-42200 128990-42510	2GM20-YEU, C-YEU, F-YEU, FC-YEU 3GM30-YEU, C-YEU, F-YEU, FC-YEU 2YM15 3YM20 3YM30	10-1333701 10-24509-01	REC653-0001	1/2"



REF	OEM		
REC728270-42002	128270-42000 128270-42001 128270-42002	2GM, F, L, YE-EC 2GM20, VE, B, C 2GMZ 3GTM 3GMF, LE 3HM, F 3GM30, VE, B, C	CEF500100GX



REF	OEM		REF. JOHNSON		
REC129670-42513	129670-42513 129670-42512 429670-42511 429670-42510 129670-42500 129670-42501 129670-42502	3JH3E, -EPA, CE, E-YEU-E 3JH4E 4JH3E, CE, CE1, -TE, -TCE, -HTE, -DTE 4JH4E, -TE, -HTE, -HTE-1	10-13328-04	REC21213660	REC129150-01881



REF	OEM		REF. JOHNSON	
REC119578-42501	119578-42501 119578-42500	6LPY3-ETP 6LY3-STP, -UTP, -STC, -UTC, -ETP-24, -STP-24, -UTP-24, -STC-24, -UTC-24	10-1286-01	CEF500162G



REF	OEM		REF. JOHNSON	
REC119773-42502	119773-42502 119773-42501 119773-42650 119773-42651 119773-42652	6LP-DTE, -STE, -DTE, -DT, -ST, -WDT, -WST 6LPA-DTE, -DTP, -STE, -STP, -STP2 Los modelos siguientes necesitan las tomas antiguas: The following models need the old water intake: I seguenti modelli richiedono i vecchi entrata d'acqua: Les modèles suivants nécessitent les anciennes douilles : 6LP-DTZE, -STZE, -DTZY, -STZY, -STZYJ 6LPA-STZP, -DTZP1, -STZE, -STZEP1, -STZP2, -STZP3	10-24493-01	REC13554-0001



JUNTAS BASE DE LA BOMBA — PUMPS BASE GASKET

REF	OEM	
REC129486-42050	129486-42050 129150-42020	3JH2, -TCE, E, 2L 3JH25A 3JH3, E-YEU-E 3JH4E 3JH5AE, E 4JH, -DTE, -HTE, -HTZ, -HTZAE, -TE, -TZ 4JH2-DTZ, -DTE, -HTE, -TE, E, -UTE 4JH3-DTZ, ZA, -CE, -TCE, -TE, E, -DTE, -HTE



GUARNIZIONE BASE POMPE ACQUA — JOINTS BASE POMPE D'EAU

REF	OEM	
REC129150-35111	129150-35111	3JH 4JH



REF	OEM	
REC119000-42021	119000-42021	4LH-DTE, -HTE, -STE, -TE, -DTZ, -HT, -HTZ, -HTZAY, -ST, -STZ, -STZAY, -UT, -UTZ, -UTZAY, -WST, -WSTZY 4LHA-DTE, -DTZE, -DTZP, -HTE, -HTP, -HTZE, -HTZP, -STE, -STP, -STZE, -STZP



JUNTAS DE LA BOMBA — GASKETS PUMP — GUARNIZIONE POMPE ACQUA — JOINTS POMPE D'EAU

REF	OEM	
REC121000-42052	121000-42052 121000-42051 121000-42050	1GM, L, Y-C 1GM10 2GM20, F, -YEU, F-YEU 2GMLP 3GM, D, F 3GM30, F, F-YEU 3HM, F 3HM35

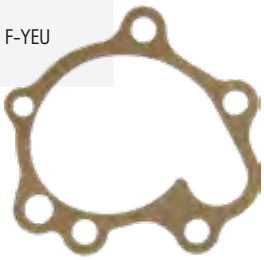

REF	OEM	
REC129150-01881	129150-01881	3JH2, -TCE, E 3JH25A 3JH3, E-YEU-E 3JH4E 3JH5AE, E 4JH, -DTE, -HTZ, -HTZA, -TZ, -TE



JUNTAS TAPA DE LA BOMBA — PUMPS COVER GASKET — GUARNIZIONE COPERCHIO POMPE ACQUA — JOINTS COUVERCLE POMPE D'EAU

REF	OEM	
REC128170-42090	128170-42090	1GM 1GM10, -B, C, L, VE



REF	OEM	
REC124223-42110	124223-42110	2GMF 2GM20F, FVE 3GMF 3GM30F, FVE 3HM, F 3HM35, C, F



REF	OEM	
REC104211-42090	104211-42090	2GM, F 2GM20, B, C, VE 3GM 3GMD 3GM30, B, C, VE

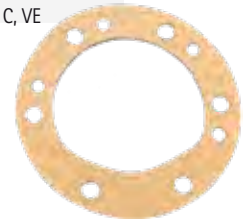

new

REF	OEM	
RECX02173476	X02173476 X0506597	2YM15 3YM20, 30, 27A, 30R, 30AE



new

REF	OEM	
REC119773-42570	119773-42570	4JH110, 57, 45, 80 3JH40



new

REF	OEM	
REC24341-000600	24341-000600	3JH30A 4JHZ, -DTZY, -TZ2, 2-DTZ, 3-DTZ, DTZ, TZA, -TZ1, 3-DTZAY, JH2

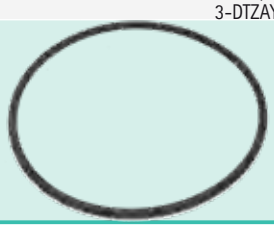

CORREA BOMBA — PUMPS BELT — CINGHIE POMPA — COURROIE POMPE

REF	OEM	
REC104511-78780E	104511-78780E	2GM20, F, F-YEU, -YEU 3GM30, F, F-YEU 3HM, F 3HM35



KITS JUNTAS ENFRIADOR AIRE — AIRCOOLER GASKETS, KITS — KIT GUARNIZIONE RAFFREDATORE ARIA — KITS JOINTS REFFROIDISSEURS AIR

4JH SERIES

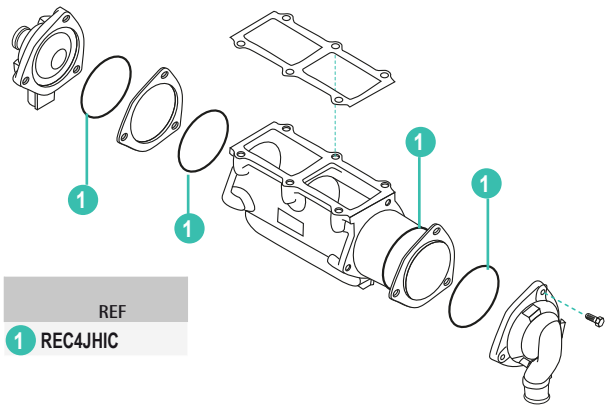

REF	
1	REC4JHIC

4LH SERIES

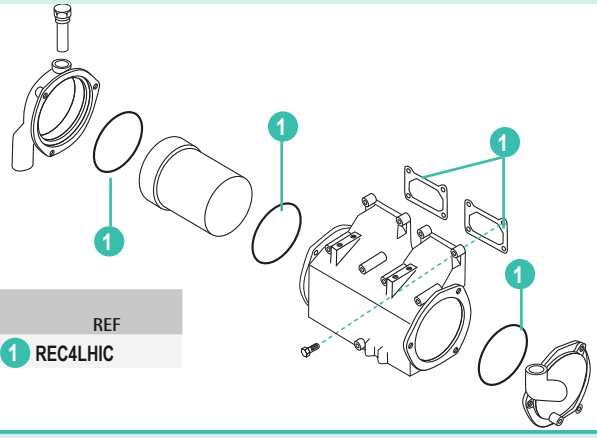

REF	
1	REC4LHIC

6LP SERIES

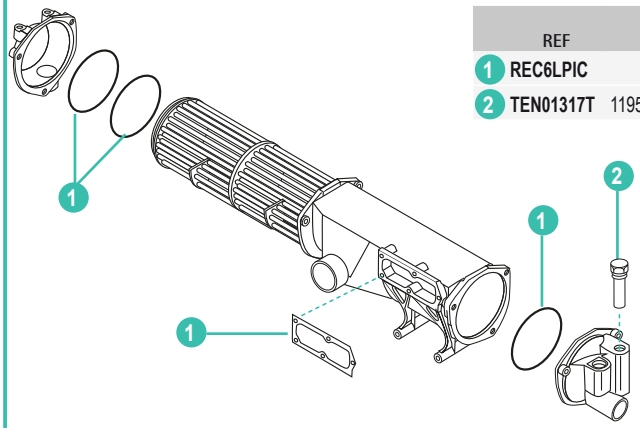

REF	OEM				
1 REC6LPIC		KIT	KIT	KIT	KIT
2 TEN01317T	119574-18790	ÁNODO COMPLETO	ANODE ASSY	ANODO COMPLETO	ANODE COMPLET

6LY SERIES

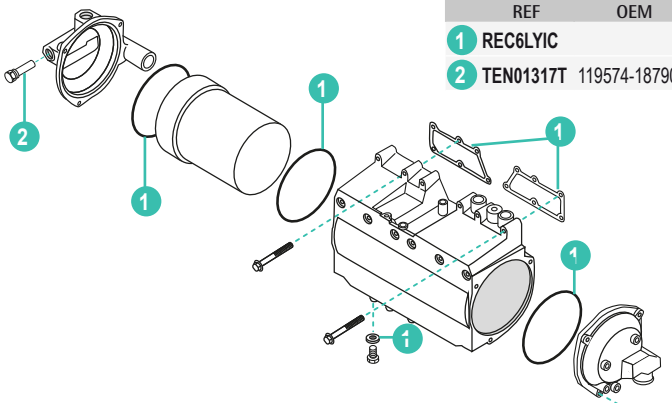

REF	OEM				
1 REC6LYIC		KIT	KIT	KIT	KIT
2 TEN01317T	119574-18790	ÁNODO COMPLETO	ANODE ASSY	ANODO COMPLETO	ANODE COMPLET

GUÍA ENFRIADOR AIRE — INTER COOLER GUIDE — GUIDA RAFFREDATORE ARIA — GUIDE REFFROIDISSEURS AIR

KIT	REF					UN.
REC4JHIC	129672-18170	TÓRICA	O-RING	FASCIA TONDA	JOINT TORIQUE	4
	129573-18120	JUNTA	GASKET	GUARNIZIONE	JOINT	1
REC4LHIC	119773-18350	TÓRICA	O-RING	FASCIA TONDA	JOINT TORIQUE	3
	119175-18590	JUNTA	GASKET	GUARNIZIONE	JOINT	2
REC6LYIC	127677-33060	TÓRICA	O-RING	FASCIA TONDA	JOINT TORIQUE	1
	119578-18420	TÓRICA	O-RING	FASCIA TONDA	JOINT TORIQUE	3
	23414-080000	JUNTA	GASKET	GUARNIZIONE	JOINT	1
	119595-18600	JUNTA	GASKET	GUARNIZIONE	JOINT	2
REC6LPIC	119773-18350	TÓRICA	O-RING	FASCIA TONDA	JOINT TORIQUE	3
	119773-18121	JUNTA	GASKET	GUARNIZIONE	JOINT	1

2GM SERIES

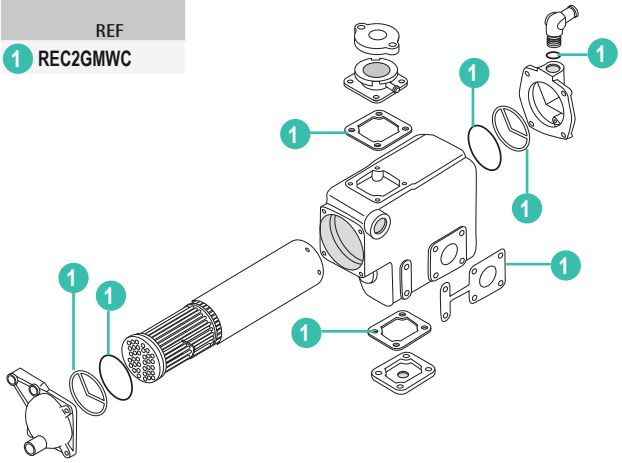

REF	
1	REC2GMWC

3GM SERIES

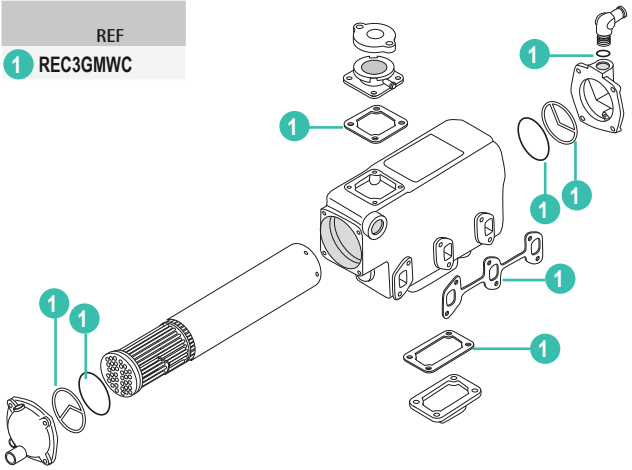

REF	
1	REC3GMWC

3JH SERIES

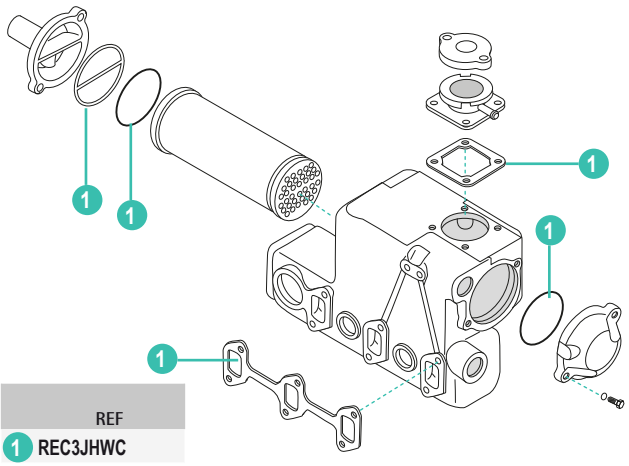

REF	
1	REC3JHWC

3YM SERIES 20 / 27/ 30

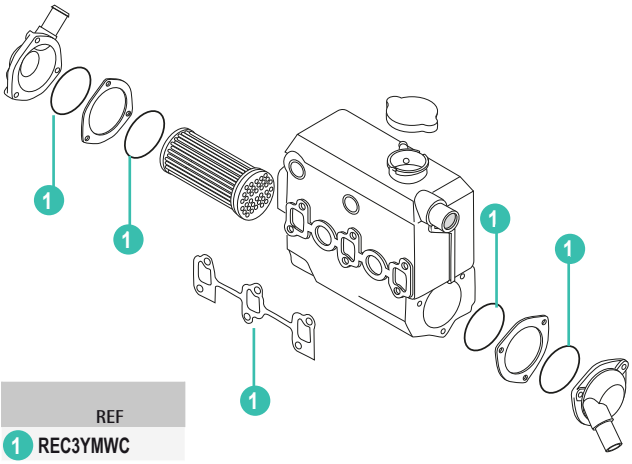

REF	
1	REC3YMWC

4JH SERIES

4JH

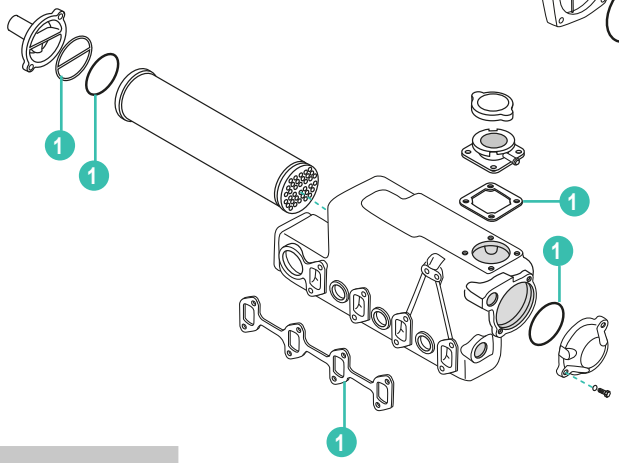

4JH110

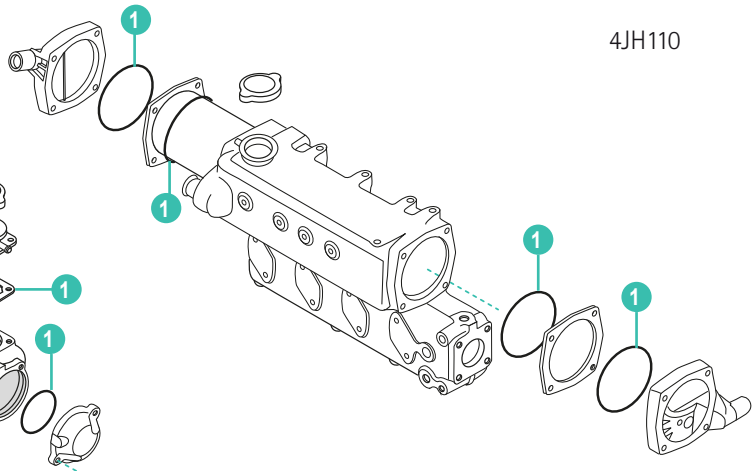

REF	
1	REC4JHWC

4LHA SERIES

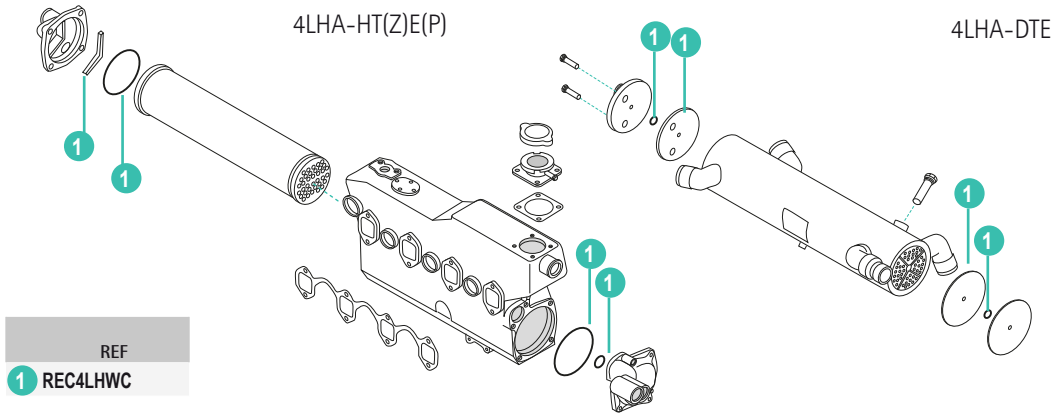

REF
1 REC4LHWC

6LY SERIES

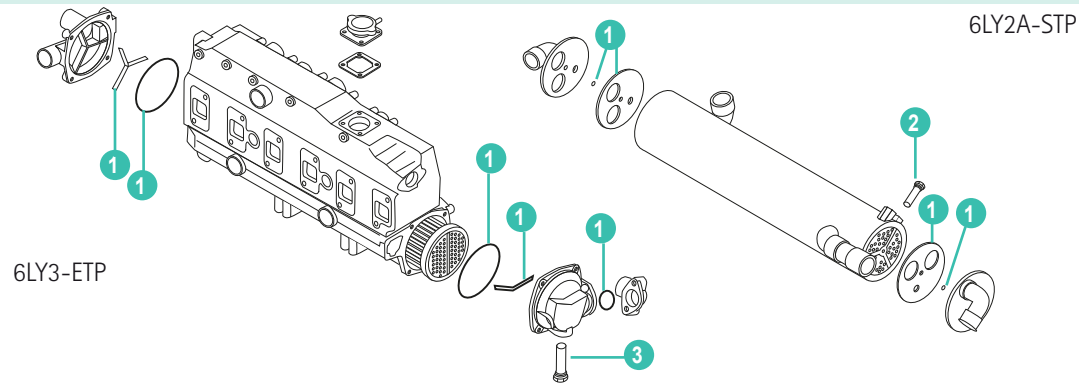

REF	OEM				
1 REC6LYWC		KIT	KIT	KIT	KIT
2 TEN01318T	119574-44150	ÁNODO COMPLETO	ANODE ASSY	ANODO COMPLETO	ANODE COMPLET
3 TEN01303	27210-200200	ANODO	ANODE	ANODO	ANODE

6LP SERIES

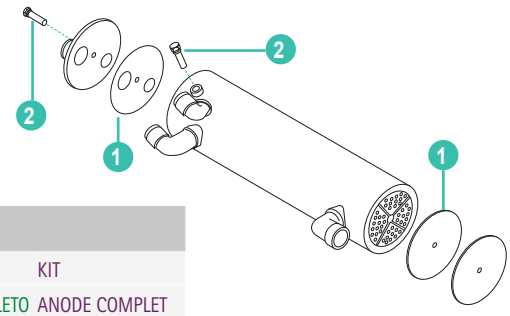

REF	OEM				
1 REC6LPWC		KIT	KIT	KIT	KIT
2 TEN01318T	119574-44150	ÁNODO COMPLETO	ANODE ASSY	ANODO COMPLETO	ANODE COMPLET

GUÍA JUNTAS ENFRIADOR AGUA | COOLING FRESH WATER COOLER | GUIDA GUARNIZIONE RIFFREDATORE ACQUA | GUIDE JOINTS REFROIDISSEUR D'EAU

KIT	REF					UN.
REC2GMWC	128695-44070	TÓRICA	O-RING	FASCIA TONDA	JOINT TORIQUE	2
	24311-000700	TÓRICA	O-RING	FASCIA TONDA	JOINT TORIQUE	2
	123682-44201	JUNTA	GASKET	GUARNIZIONE	JOINT	1
	24311-000160	TÓRICA	O-RING	FASCIA TONDA	JOINT TORIQUE	1
	128290-13251	JUNTA	GASKET	GUARNIZIONE	JOINT	1
	121450-11681	JUNTA	GASKET	GUARNIZIONE	JOINT	1
REC3GMWC	128297-44030	TÓRICA	O-RING	FASCIA TONDA	JOINT TORIQUE	2
	128695-44070	TÓRICA	O-RING	FASCIA TONDA	JOINT TORIQUE	2
	24311-000700	TÓRICA	O-RING	FASCIA TONDA	JOINT TORIQUE	2
	123682-44201	GASKET	GASKET	GUARNIZIONE	JOINT	1
	24311-000160	O-RING	O-RING	FASCIA TONDA	JOINT TORIQUE	1
	121450-13251	GASKET	GASKET	GUARNIZIONE	JOINT	1
	128390-44491	GASKET	GASKET	GUARNIZIONE	JOINT	1

KIT	REF					UN.
REC3YMWC	128990-44100	TÓRICA	O-RING	FASCIA TONDA	JOINT TORIQUE	4
	119717-13110	JUNTA	GASKET	GUARNIZIONE	JOINT	1
REC3JHWC	120322-33050	TÓRICA	O-RING	FASCIA TONDA	JOINT TORIQUE	1
	24321-000750	TÓRICA	O-RING	FASCIA TONDA	JOINT TORIQUE	2
	129670-44150	TÓRICA	O-RING	FASCIA TONDA	JOINT TORIQUE	2
	120445-44611	JUNTA	GASKET	GUARNIZIONE	JOINT	1
	129150-13110	JUNTA	GASKET	GUARNIZIONE	JOINT	1
REC4JHWC	129693-44420	TÓRICA	O-RING	FASCIA TONDA	JOINT TORIQUE	2
	127677-33060	TÓRICA	O-RING	FASCIA TONDA	JOINT TORIQUE	4
	129573-44470	TÓRICA	O-RING	FASCIA TONDA	JOINT TORIQUE	2
	120322-33050	TÓRICA	O-RING	FASCIA TONDA	JOINT TORIQUE	2
	129672-44150	TÓRICA	O-RING	FASCIA TONDA	JOINT TORIQUE	2
	120445-44611	JUNTA	GASKET	GUARNIZIONE	JOINT	1
	24321-000800	TÓRICA	O-RING	FASCIA TONDA	JOINT TORIQUE	2
	24321-000750	TÓRICA	O-RING	FASCIA TONDA	JOINT TORIQUE	2
	24321-001000	TÓRICA	O-RING	FASCIA TONDA	JOINT TORIQUE	2
	129550-13110	JUNTA	GASKET	GUARNIZIONE	JOINT	1
REC4LHWC	119174-44470	RETÉN	SEAL	TENUTE	JOINT D'HUILE	1
	119171-44470	RETÉN	SEAL	TENUTE	JOINT D'HUILE	1
	24311-001000	TÓRICA	O-RING	FASCIA TONDA	JOINT TORIQUE	2
	24311-001200	TÓRICA	O-RING	FASCIA TONDA	JOINT TORIQUE	2
	24311-000300	TÓRICA	O-RING	FASCIA TONDA	JOINT TORIQUE	2
	119175-33350	TÓRICA	O-RING	FASCIA TONDA	JOINT TORIQUE	2
	119175-33380	JUNTA	GASKET	GUARNIZIONE	JOINT	1
	119175-33370	JUNTA	GASKET	GUARNIZIONE	JOINT	1
REC6LYWC	119578-44420	RETÉN	SEAL	TENUTE	JOINT D'HUILE	1
	119578-44350	TÓRICA	O-RING	FASCIA TONDA	JOINT TORIQUE	2
	119578-44430	RETÉN	SEAL	TENUTE	JOINT D'HUILE	1
	24311-000400	TÓRICA	O-RING	FASCIA TONDA	JOINT TORIQUE	1
	119175-33350	TÓRICA	O-RING	FASCIA TONDA	JOINT TORIQUE	2
	119574-44170	JUNTA	GASKET	GUARNIZIONE	JOINT	2
REC6LPWC	119773-44080	JUNTA	GASKET	GUARNIZIONE	JOINT	1
	119773-44071	JUNTA	GASKET	GUARNIZIONE	JOINT	1

KITS JUNTAS ENFRIADOR ACEITE — OIL COOLER GASKETS, KITS — KIT GUARNIZIONE RAFFREDATORE OLIO — KITS REFFROIDISSEURS D'HUILE

4JH SERIES

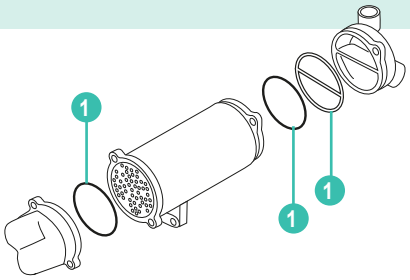

	REF
1	REC4JHOC

4LHSERIES

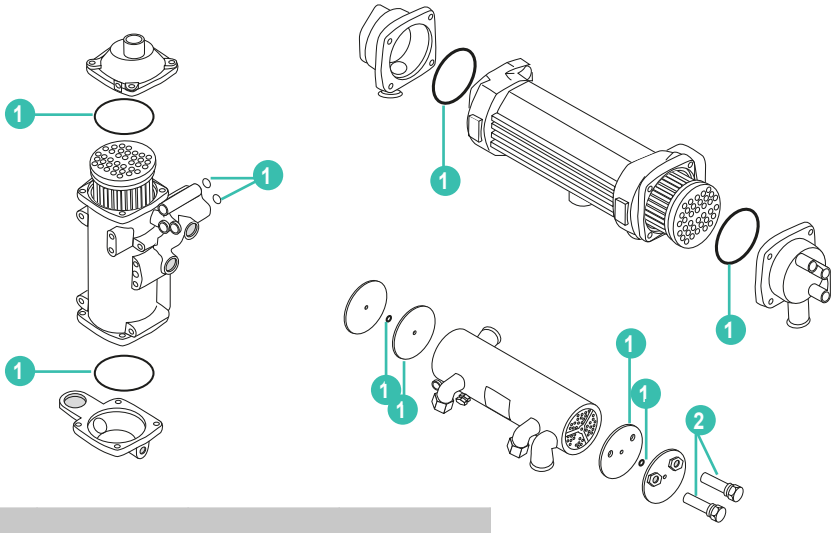

	REF	OEM				
1	REC4LHOC		KIT	KIT	KIT	KIT
2	TEN01318T		ÁNODO COMPLETO	ANODE ASSY	ANODO COMPLETO	ANODE COMPLET

6LP SERIES

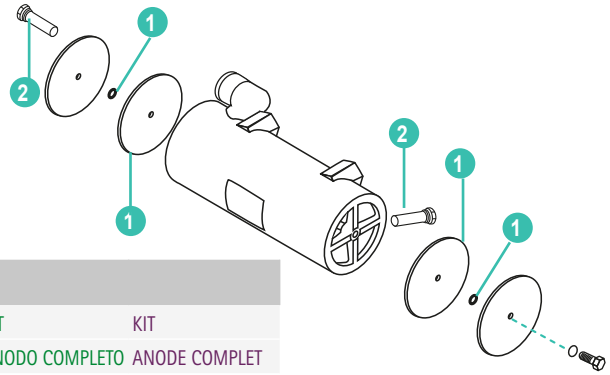

REF	OEM				
1 REC6LPOC		KIT	KIT	KIT	KIT
2 TEN01318T	119574-44150	ÁNODO COMPLETO	ANODE ASSY	ANODO COMPLETO	ANODE COMPLET

6LYOC SERIES

6LY3-ETP

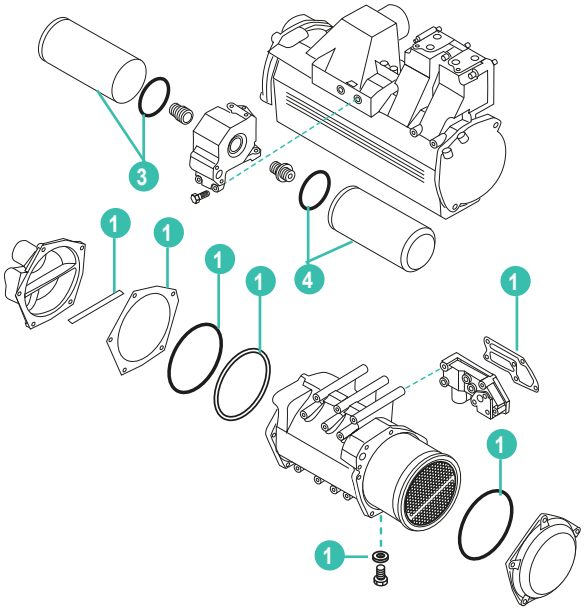

6LY2-STP

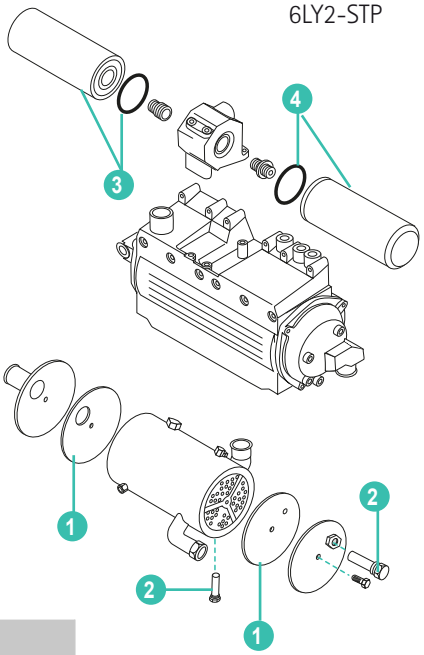

REF	OEM				
1 REC6LYOC		KIT	KIT	KIT	KIT
2 TEN01318T	119574-44150	ÁNODO COMPLETO	ANODE ASSY	ANODO COMPLETO	ANODE COMPLET
3 REC119593-35100	119593-35100	FILTRO ACEITE	OIL FILTER	FILTRO OLIO	FILTRE HUILE
4 REC119593-35400	119593-35400	FILTRO ACEITE	OIL FILTER	FILTRO OLIO	FILTRE HUILE

GUÍA ENFRIADORES DE ACEITE — OIL COOLER GUIDE — GUIDA RAFFREDRATORI D'OLIO — GUIDE REFFROIDISSEURS D'HUILE

KIT	REF					UN.
REC4JHOC	24321-000750	TÓRICA	O-RING	FASCIA TONDA	JOINT TORIQUE	2
	24321-000800	TÓRICA	O-RING	FASCIA TONDA	JOINT TORIQUE	1
	120322-33050	TÓRICA	O-RING	FASCIA TONDA	JOINT TORIQUE	1
	129673-33050	TÓRICA	O-RING	FASCIA TONDA	JOINT TORIQUE	1
REC4LHOC	24311-000180	TÓRICA	O-RING	FASCIA TONDA	JOINT TORIQUE	2
	24311-000900	TÓRICA	O-RING	FASCIA TONDA	JOINT TORIQUE	2
	119175-33350	TÓRICA	O-RING	FASCIA TONDA	JOINT TORIQUE	2
	119175-33370	JUNTA	GASKET	GUARNIZIONE	JOINT	1
	119175-33380	JUNTA	GASKET	GUARNIZIONE	JOINT	1
REC6LYOC	119574-33150	JUNTA	GASKET	GUARNIZIONE	JOINT	1
	119574-66160	JUNTA	GASKET	GUARNIZIONE	JOINT	1
	119578-34020	JUNTA	GASKET	GUARNIZIONE	JOINT	1
	119578-33080	RETÉN	SEAL	TENUTA	JOINT D'HUILE	1
	119578-33121	JUNTA	GASKET	GUARNIZIONE	JOINT	1
	119578-33130	TÓRICA	O-RING	FASCIA TONDA	JOINT TORIQUE	1
	24321-001500	TÓRICA	O-RING	FASCIA TONDA	JOINT TORIQUE	1
	22190-100002	JUNTA	GASKET	GUARNIZIONE	JOINT	1
REC6LPOC	119773-33070	JUNTA	GASKET	GUARNIZIONE	JOINT	1
	119175-33370	JUNTA	GASKET	GUARNIZIONE	JOINT	1
	119175-33350	TÓRICA	O-RING	FASCIA TONDA	JOINT TORIQUE	2

PARTES DEL MOTOR
ENGINE PARTS

PARTI MOTORE
PIÈCES MOTEUR

JUNTAS MOTOR — ENGINE GASKETS — GUARNIZIONE MOTORE — JOINTS MOTEUR

JUNTAS CULATA — CYLINDER HEAD GASKETS — GUARNIZIONE TESTATA — JOINTS CULASSE

REF	OEM		KIT
REC128170-01331	128170-01331 128170-01330	1GM, L, Y-C	REC728170-92600
REC128171-01911	128171-01911 128171-01330	1GM10	REC728171-92601



REC128170-01331



REC128171-01911

new



REF	OEM		KIT
REC119415-01330	119415-01330	3YM15	REC728790-92600

REF	OEM		KIT
REC128271-01911	128271-01911	2GM20, F, F-YEU, -YEU 2GMLP	REC728271-92605



new



REF	OEM		KIT
REC119717-01331	119717-01330 119717-01331	3YM27 3YM30	REC728990-92600

REF	OEM		KIT
REC129002-01331	128271-01911	3JH3, E-YEU-E	REC729270-92601



REF	OEM		KIT
REC129001-01340	129001-01340	3JH4E 3JH5AE, E	REC729271-92600

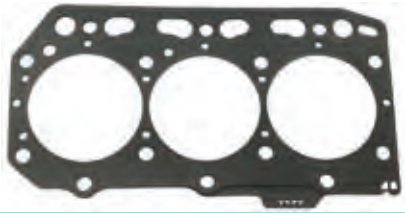

REF	OEM		KIT
REC128374-01911	128374-01911	3GM30, F, F-YEU	REC728374-92605

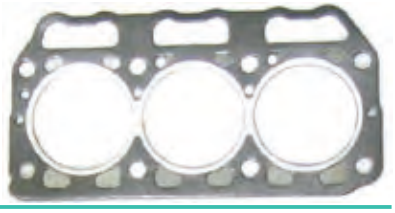

REF	OEM		KIT
REC128671-01330	128671-01330	3HM35	

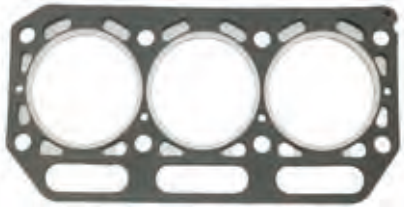

REF	OEM		KIT
REC128370-01332	128370-01331 128370-01332	3GM, D, F	REC728370-92605



REF	OEM		KIT
REC129171-01330	129171-01330	3JH2, 25A, E, L, -TCE	**REC729171-92600**



REF	OEM		KIT
REC129407-01340	129407-01340	4JH4E, AE 4JH5E	**REC729407-92605**



REF	OEM		KIT
REC121575-01334	121575-01334 121575-01333 121575-01332 121575-01331	3HM, F	

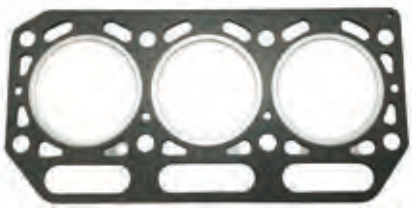

REF	OEM		KIT
REC129573-01351	129573-1351	4JH2-DTE, E, -HTE, -TE, -UTE	**REC729573-92605**



REF	OEM		KIT
REC128625-01342	128625-01342	6GHA-ET, -ST, -STE 6GHAK-ST1 6GHAM-STE 6GHD-ST	



REF	OEM		KIT
REC129693-01331	129693-01331	4JH3-DTE, -HTE	**REC729693-92600**



REF	OEM		KIT
REC129408-01330	129408-01330	4JH3, E, CE, ZA 4JH3-TCE, -TE	**REC729408-92605**



REF	OEM		KIT
REC129553-01350	129553-01350	4JH-DTE, E, -HTE, -HTZ, -HTZAE, -TE, -TZ	**REC729470-92605**

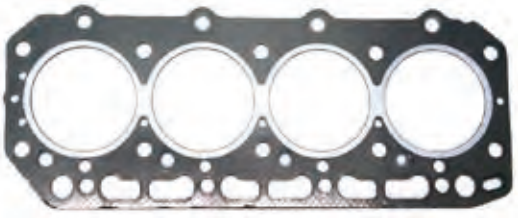

REF	OEM		KIT
REC119174-01340	119174-01340	4LH-TE, -HTE, -DTE, -STE, -HT, -HTZ, -HTZAY, -DTZ, -UT, -UTZAY, -UT2, -ST, -STZAY, -STZ, -WST, -WSTZY 4LHA-STE, -STP, -STZE, -STZP, -DTE, -DTP, -DTZE, -DTZP, -HTE, -HTP, -HTZE, -HTZP	**REC719173-92600** **REC719171-92602**

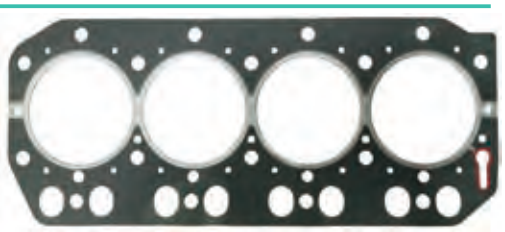

MARK1

REF	OEM	
REC119771-00401	119771-00401	6LP-ST, -STE, -STZE, -STZE1, -STZY, -STZYJ, -WST, -WSTZY



REF	OEM	
REC119770-00930	119770-00930	6LPA-DTE, -DTP, -DTZE, -DTZP, -DTZEP1 6LP-DT, -DETE, -DTP, -DTZE, -DTZE1, -DTZEP, -DTZEP1, -DTZY, -WDT, -WDTZY



MARK3

REF	OEM	
REC119770-00940	119770-00940	**6LPA**-DTE, -DTP, -DTZE, -DTZP, -DTZEP1 **6LP**-DT, -DETE, -DTP, -DTZE, -DTZE1, -DTZEP, -DTZEP1, -DTZY, -WDT, -WDTZY



REF	OEM	
REC119771-00411	119771-00411	**6LP**-ST, -STE, -STZE, -STZE1, -STZY, -STZYJ, -WST, -WSTZY



MARK5

REF	OEM	
REC119771-00421	119771-00421	**6LP**-ST, -STE, -STZE, -STZE1, -STZY, -STZYJ, -WST, -WSTZY



REF	OEM	
REC119770-00950	119770-00950	**6LPA**-DTE, -DTP, -DTZE, -DTZP, -DTZEP1 **6LP**-DT, -DETE, -DTP, -DTZE, -DTZE1, -DTZEP, -DTZEP1, -DTZY, -WDT, -WDTZY



KIT JUNTAS — GASKET SETS — KIT GUARNIZIONI — JOINTS CULASSE

REF	OEM	
REC728170-92600	728170-92600	1GM 1GML

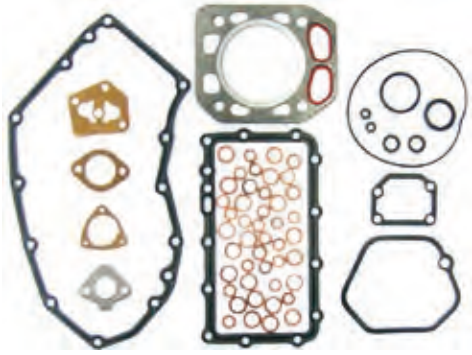

REF	OEM	
REC728171-92601	728176-92600	1GMY-C
	728171-92601	1GM10

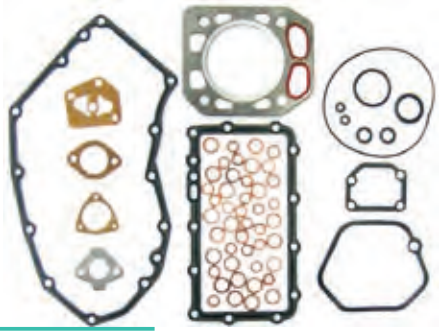

REF	OEM	
REC728790-92600	728790-92600	2YM15

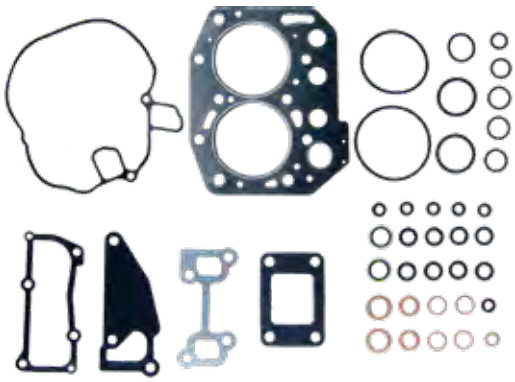

REF	OEM	
REC728271-92605	728271-92605	2GM20, F



REF	OEM	
REC729271-92600	729271-92600	3JH4E 3JH5



REF	OEM	
REC728374-92605	728374-92605 728370-92600	3GM30, F, F-YEU 3GM, F, D

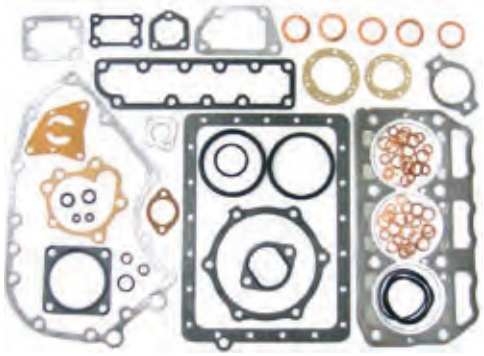

REF	OEM	
REC728990-92600	728990-92600	3YM30

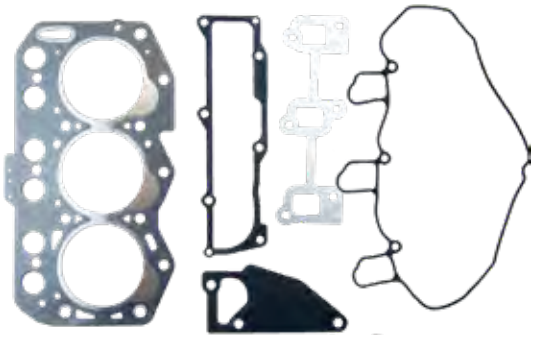

REF	OEM	
REC729171-92600	729171-92600	3JH2, E, L, -TCE

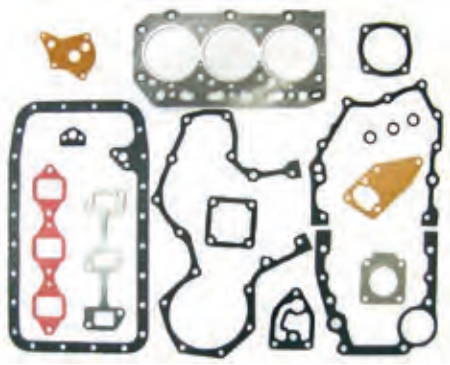

REF	OEM	
REC729693-92600	729693-92699	4JH3-DTE, -HTE, -TE, -TCE

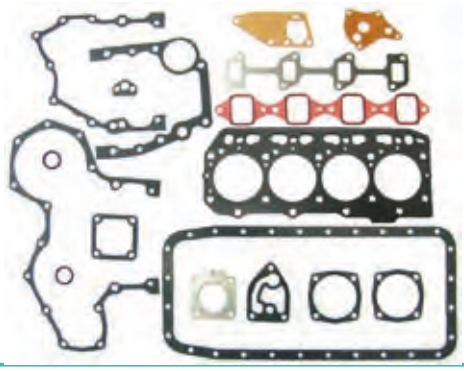

REF	OEM	
REC729270-92601	729270-92601	3JH3E-YEU-E

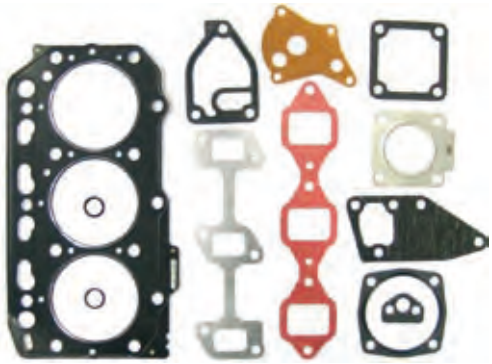

REF	OEM	
REC729573-92605	729573-92605	4JH2-DTE, E, -HTE, -TE, -UTE

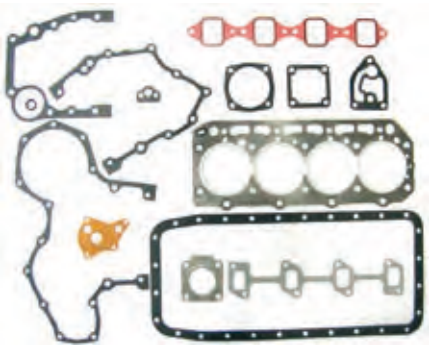

REF	OEM	
REC719171-92602	719171-92602	4LH-HTE, -STE, -TE

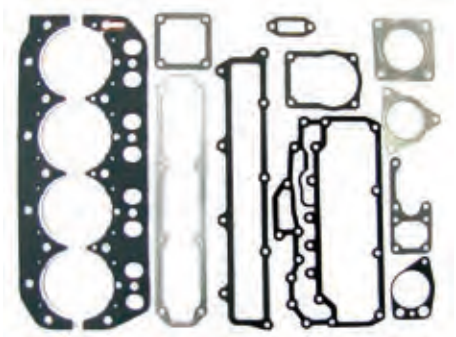

REF	OEM	
REC729470-92605	729470-92605	4JH-DTE, E, -HTE, -HTZ, -HTZAE, -TE, -TZ 4JH4E, AE

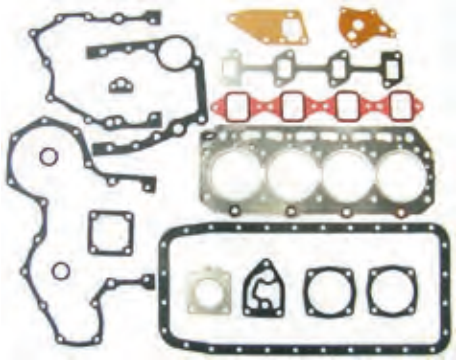

REF	OEM	
REC729408-92605	729408-92600 729408-92605	4JH3, CE, 3E, ZA

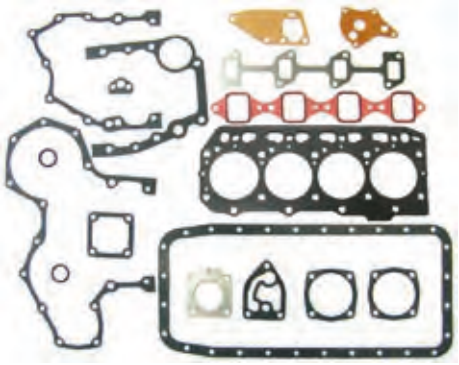

REF	OEM	
REC040122		6LP-STE, -STP, -STZE, -STZE1 6LPA-STE, -STP, -STZP

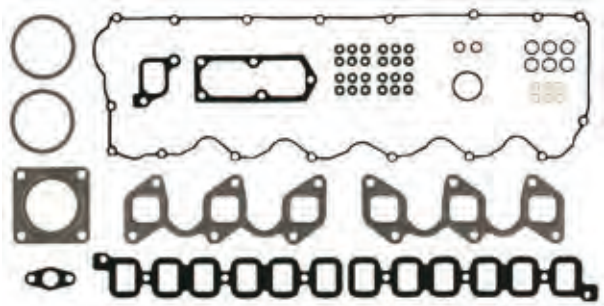

new

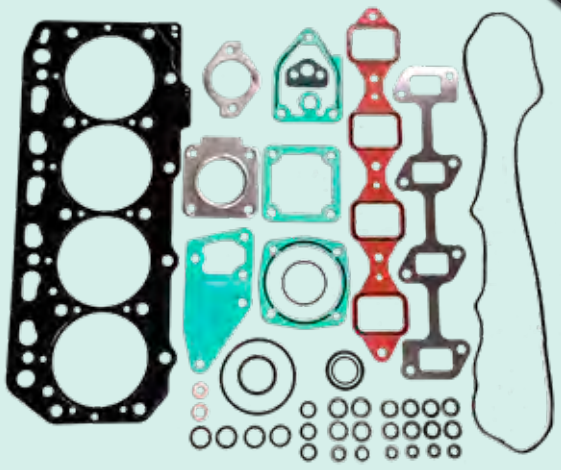

REF	OEM		KIT
REC729670-92600	729670-92600	4JH4E 4JH4AE 4JH5E	**REC728990-92600**

REF	OEM	
REC719173-92600	719173-92600	4LHA-DTE, -DTP, -DTZE, -DTZP, -HTE, -HTP, -HTZE, -HTZP, -STE, -STP, -STZE, -STZP, -DTE

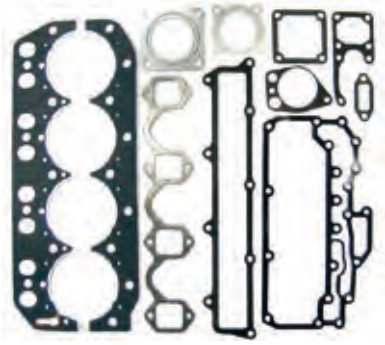

REF	OEM	
REC930122	930122	6LP-DTP, -DTZE, -DTZE1, -DTZP, -DTZP1 6LPA-DTE, -DTP, -DTZE, -DTZP

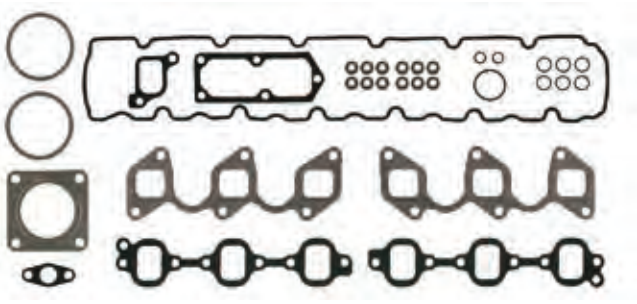

KITS SIN JUNTA CULATA | KIT, WITHOUT HEAD GASKET | KIT SENZA GUARNIZIONE TESTATA | KITS SANS JOINT DE CULASSE

REF
YANMAR1GMSERIES



REF
YANMAR2GMSERIES



REF
YANMAR3GMSERIES



REF
YANMAR4JHSERIES



REF
YANMAR4LHSERIES



GUIA KITS DE JUNTAS | GASKETS KIT, APPLICATION | GUIDA KIT GUARNIZIONI | GUIDE KITS DE JOINTS

KIT	JUNTA CULATA CYL HEAD GASKET GASKET TESTA JOINT DE CULASSE
YANMAR1GMSERIES	REC128170-01331
YANMAR1GMSERIES	REC128171-01911
YANMAR2GMSERIES	REC128271-01911
YANMAR3GMSERIES	REC128374-01911
YANMAR3GMSERIES	REC128370-01332
YANMAR4JHSERIES	REC129408-01330

KIT	JUNTA CULATA CYL HEAD GASKET GASKET TESTA JOINT DE CULASSE
YANMAR4JHSERIES	REC129407-01340
YANMAR4JHSERIES	REC129573-01351
YANMAR4JHSERIES	REC129693-01331
YANMAR4JHSERIES	REC129593-01350
YANMAR4LHSERIES	REC119174-01340
YANMAR4LHSERIES	REC119174-01340

JUNTAS TAPA BALANCINES | VALVE COVER GASKET | GUARNIZIONI COPERCHIO PUNTERIE | JOINTS COUVRE-SOUPAPE

REF	OEM	
REC128170-11310	128170-11310	1GM, 10, L, Y-C



REF	OEM	
REC128270-11310	128270-11310	2GM 2GM20, F, F-YEU, -YEU



REF	OEM	
REC121450-11310	121450-11310	3GM30, F, F-YEU 3GMF, 30D



REF	OEM	
REC119100-11360	119100-11360	4LHA-DTE, -DTP, -DTZE, -DTZP, -HTE, -HTP, -HTZE, -HTZP, -STE, -STR, -STZE, -STZP 4LH-DTE, -HTE, -STE, -TE

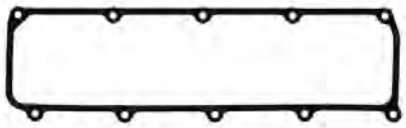

REF	OEM	
REC129601-11310	129601-11310	4JH



REF	OEM	
REC119770-00060	119770-00060	6LP-DTE, -DTP, -DTZE, -DTZE1, -DTZP, -DTZP1 6LPA-DTE, -DTP, -DTZE, -DTZP

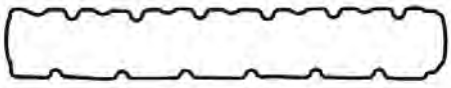

REF	OEM	
REC119593-11380	119593-11380	6LY-STE, -UTE 6LYA-STE, -STP, -UTE, -UTP 6LY2-STE, -STP 6LY2A-STE, -STP



REF	OEM	
REC119771-00040	119771-00040	6LP-STE, -STP, -STZE, -STZE1 6LPA-STE, -STP, -STZP

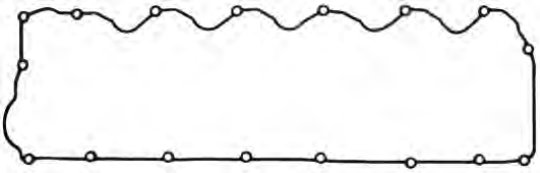

JUNTAS COLECTOR DE ADMISIÓN — INTAKE MANFOLD GASKET — GUARNIZIONE COLLETTORE ASPIRAZIONE — JOINTS CATER ADMISSION

REF	OEM	
REC129150-12111	129150-12111	**3JH2,** -TCE, E, L **3JH25**A **3JH3,** -YEU-E **3JH4**E **3JH5**AE, E



REF	OEM	
REC119100-12113	119100-12113	**4LH**-DTE, -DTZ, -HT, -HTE, -HTZ, -HTZAY, -ST, -STE, -STZ, -STZAY, -TE, -UT, -UTZ, -UTZAY, -WST, -WSTZY **4LHA**-DTE, -DTP, -DTZE, -DTZP, -HTE, -HTP, -HTZE, -HTZP, -STE, -STP, -STZE, -STZP



JUNTAS TAPA DE ADMISIÓN — INTAKE COVER GASKET — GUARNIZIONE COPERCHIO ASPIRAZIONE — JOINTS COUVERCLE ADMISSION

REF	OEM	
REC129150-77511	129150-77511	**3JH2**, -TCE, E, L **3JH25**A **3JH3,** -YEU-E **3JH4**E **3JH5**AE, E



REF	OEM	
REC129470-12130	129470-12130	**4JH**, -HTZ, -HTZAE, -TZ **4JH2**-DTE, E, -HTE, -TE, -UTE **4JH3,** E, CE, ZA, -TCE, -TE, -DTE, -HTE **4JH4**E, AE **4JH5**E



JUNTAS COLECTOR DE ESCAPE — EXHAUST MANIFOLD GASKET — GUARNIZIONE COLLETTORE DI SCARICO — JOINTS COLECTEUR D'ECHAPPEMENT

REF	OEM	
REC129150-13110	129150-13110	3JH2, E, L, -TCE 3JH25A 3JH4E 3JH5AE, E



REF	OEM	
REC129550-13110	129550-13110	4JH, -DTE, E, -HTE, -HTZ, -HTZAE, -TE, -TZ 4JH2-DTE, E, -HTE, -TE, -UTE 4JH3, E, CE, ZA, -TCE, -TE, -DTE, -HTE 4JH4E, AE 4JH5E



JUNTAS TAPA DE ESCAPE — EXHAUST COVER GASKET — GUARNIZIONE COPERCHIO DI SCARICO — JOINTS COUVERCLE D'ECHAPPEMENT

REF	OEM	
REC128370-13181	128370-13181	3GM30, F, F-YEU

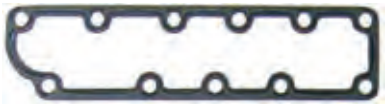

REF	OEM	
REC119174-13201	119174-13201	4LH-DTE, -DTZ, -HT, -HTE, -HTZ, -ST, -HTZAY, -STE, -STZ, -STZAY, -TE, -UT, -UTZ, -UTZAY 4LHA-DTE, -DTP, -DTZE, -DTZP, -HTE, -HTP, -HTZE, -HTZP, -STE, -STP, -STZE



JUNTAS CODOS DE ESCAPE — EXHAUST ELBOW GASKET — GUARNIZIONE GOMITO DI SCARICO — JOINTS COUDES D'ECHAPPEMENT

REF	OEM	
REC129472-18090	129472-18090	3JH2, E, L, -TCE 3JH225A 3JH3, E-YEU-E 3JH4E 3JH5AE, E 4JH2-DTE, E, -HTE, -TE, -UTE 4JH, E, -HTE, -HTZ, -HTZAE, -TE, -TZ 4JH3, E, CE, ZA, -TCE, -TE, -DTE, -HTE 4JH4AE 4JH5E



REF	OEM	
REC119171-13510	119171-13510	4LH-DTE, -DTZ, -HT, -HTE, -HTZ, -ST, -HTZAY, -STE, -STZ, -STZAY, -TE, -UT, -UTZ, -UTZAY



REF	OEM	
REC128370-13201	128370-13201	2GM 3GM

new



REF	OEM	
REC128170-13201	128170-13201	1GM 2GM



REF	OEM	
REC129472-13520	129472-135201	3JH 4JH

new



REF	OEM	
REC119173-18940	119173-18940	4LH-DTE

new



JUNTAS TURBO — TURBO GASKETS — GUARNIZIONI TURBINE — JOINTS TURBO

REF	OEM	
REC128300-13230	128300-13230	**4LH**-DTE, -DTZ, -HT, -HTE, -HTZ, -ST, -HTZAY, -STE, -STZ, -STZAY, -TE, -UT, -UTZ, -UTZAY **4LHA**-DTE, -DTP, -DTZE, -DTZP, -HTE, -HTP, -HTZE, -HTZP, -STE, -STP, -STZE **6LP**-DT, -DTE, -DTZE, -DTZE1, -DTZY, -ST, -STE, -STZE, -STZE1, -STZY, -STZYJ



RETÉN TAPA LATERAL BLOQUE / SEAL SIDE COVER BLOCK / GUARNIZIONE COPERCHIO LATERALE BLOCCO / JOINT COUVERCLE LATERAL DU BLOC

REF	OEM	
REC121575-01861	121575-01861	**1GM,** 10, L, Y-C **2GM20,** F, -YEU **2GM**LP **3GM,** D, F **3GM30,** F, F-YEU **3HM,** 35, F



RETÉN TAPA BLOQUE / SEAL COVER BLOCK / GUARNIZIONE COPERCHIO BLOCCO / JOINT COUVERCLE DU BLOC

REF	OEM	
REC124610-01862	124610-01862 124610-01861	**4LH**-TE, -HTE, -HTZ **4LHA**-HTP, -HTZE, -HTZP **6LY**-UT, -ST, -UTZY, -STZY, -UTM, -STM, -UTE, -STE, -WST, -WSTZY, WUT, WUTZY **6LYM**-UTE, -STE, -UTEHD **6LY2**-ST, -STVY, -STP, A-STP, A-UTP, -WDT, -WDTZY, -WST **6LYA**-STE, -STP, -UTE



REF	OEM	
REC119000-01771	119000-01771	**4LH**-TE, -HTE, -HTZ **4LHA**-HTE, -HTP, -HTZE, -HTZP **6LY**-UT, -ST, -UTZY, -STZY, -UTM, -STM, -UTE, -STE, -WST, -WSTZY, -WUT **6LYM**-UT, -STE **6LY2**-ST, -STVY, -STP, -WDT, -WDTZY, -WST **6LY2A**-STP, -UTP **6LYA**-STE, -STP, -UTE **6LYM**-UTE, -UTEHD



JUNTAS TAPA VARILLA ACEITE / COVER GASKET OIL DIPSTICK / GUARNIZIONE COPERCHIO ASTA DI LIVELLO DELL'OLIO / JOINT COUVERCLE D'HUILE

REF	OEM	
REC124160-34845	124160-34845 124160-34844	3GM, D, F 3GM30, F, F-YEU



JUNTAS TAPA ÁNODO ZN / COVER GASKET ZN ANODE / GUARNIZIONE COPERCHIO ANODO ZN / JOINT COUVERCLE ANODE ZN

REF	OEM	
REC121450-11681	121450-11681 121450-11680	2GM20, F, F-YEU, -YEU 2GMLP 3GM, D, F, F-YEU



JUNTAS TAPA RESPIRADERO / BREATHER COVER GASKET / GUARNIZIONE COPERCHIO SFIATATOIO / JOINT DE PLAQUE

REF	OEM	
REC128170-03070	128170-03070	1GM, L, Y-C 1GM10



REF	OEM	
REC121000-03071	121000-03071 121000-03070	2GML 2GLMP 2GM20, F, F-YEU, -YEU 2GMLP 3GM30F, F-YEU

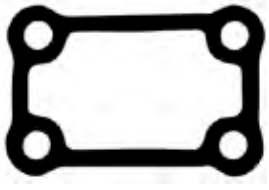

JUNTAS DE CÁRTER — OIL PAN GASKET — GUARNIZIONE COPPA DELL'OLIO — JOINTS CARTER

REF	OEM	
REC128170-01751	128170-01751 128170-01750	**1GM** **1GM10,** -B, C, L, VE



REF	OEM	
REC129198-01750	129198-01750	**3JH2**, BE, E, Z



REF	OEM	
REC124000-01751	124000-01751 124000-01750	**2GM20**, -YEU, B, C, C-YEU, F, F-YEU, FC-YEU



REF	OEM	
REC129400-01751	129400-01751	**4JH,** , E, -HT, -T, -TE **4JH2**E, -DTE, -HTE, -TE, -UTB, -UTE **4JH3**, ZA, -DTE, -HTE, -TCE, -TE



REF	OEM	
REC121000-01751	121000-01751 121000-01750	**3GM,** D, F **3GM30,** , -YEU, B, C, C-YEU, F, F-YEU, FC-YEU, FVE, VE



JUNTAS BOMBA COMBUSTIBLE — FUEL PUMP GASKET — GUARNIZIONE POMPA COMBUSTIBILE — JOINT COUVERCLE POMPE ESSENCE

REF	OEM	
REC121520-01851	121520-01851 121520-01850	1GM, L, LP, Y-C 1GM10 2GM20, F, F-YEU, -YEU 3GM, D, F 3GM30, F, F-YEU



JUNTAS TAPA BOMBA — PUMP COVER GASKET — GUARNIZIONE COPERCHIO POMPA — JOINT COUVERCLE POMPE

REF	OEM	
REC124240-01883	124240-01883 124240-01882	2GM20, F, F-YEU, -YEU 2GMLP 3GM, D, F 3GM30, F, F-YEU



REF	OEM	
REC104211-42090	104211-42090	1GM, L, Y-C 2GM20, F, F-YEU 2GH20-YEU 2GMLP 3GM, D, F 3GM30, F, F-YEU



JUNTAS TAPA RETÉN TRASERO — REAR SEAL COVER GASKET

GUARN. COPERCHIO PARAOLIO POSTERIORE — JOINT SPI COUVERCLE ARRIÈRE

REF	OEM	
REC105225-02040	105225-02040	2GM20, F, F-YEU, -YEU

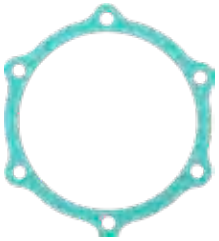

REF	OEM	
REC105582-82041	105582-82041	1GMY, -C, -EC 2GMFYE-E 2GMYE-EC



REF	OEM	
REC129100-01621	129100-01621	3JH25A

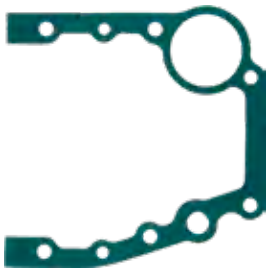

JUNTAS TAPA RETÉN DELANTERO — FRONT SEAL COVER GASKET

GUARN.COPERCHIO PARAOLIO ANTERIORE — JOINT DE PLAQUE AVANT

REF	OEM	
REC128170-01510	128170-01510 128170-01511	1GM, L, Y-C 1GM10



REF	OEM	
REC129150-01531	129150-01531	3JH25A

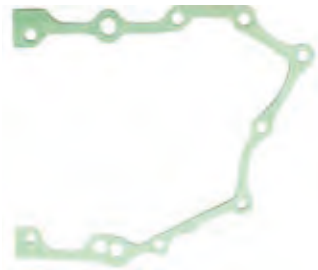

REF	OEM	
REC121575-01510	121575-01510 121575-01511 121575-01512	1GM, L, Y-C 1GM10 2GM20, F, F-YEU, -YEU 2GMLP 3GM, D, F 3GM30, F, F-YEU

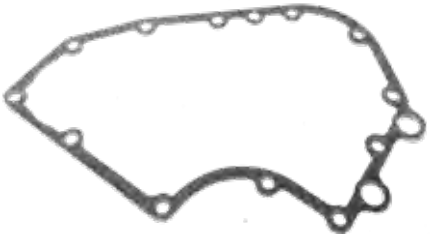

REF	OEM	
REC129150-01511	129150-01511	3JH25A



IMPULSORES — IMPELLERS

GIRANTI — TURBINES

REF	OEM	
CEF500113 **REC1411-0001**	128176-42080	**1GM**, L, Y-C **1GM10**



REF	OEM	
REC3586494	104211-42070 104211-42071	**2GM**, SZK **3GM30**



REF	OEM	
REC653-0001	128990-42200 128990-42570	**2GM20,** F-YEU, -YEU **3GM30,** F-YEU



REF	OEM	
REC3841697	120650-42310 127610-42200	**4LHA**-DTE, -DTP, -DTZE, -DTZP, -HTE, -HTP, -HTZE, -HTZP, -STE, -STP, -STZE, -STZP **4LH**-DTE, -DTZ, -HT, -HTE, -HTZ, -HTZAY, -ST, -STE, -STZ, -STZAY, -TE, -UT, -UTZ, -UTZAY **4CH**-DT



REF	OEM	
REC21213660	129470-42530 129470-42352 129670-42530 129670-42531	**3JH2,** E, L, -TCE **3JH25A** **3JH3,** E-YEU-E **3JHA**E **3JH5**AE, E **4JH2**-DTE, E, HTE, -TE, -UTE **4JH3**-HTE, -TE, -DTE **4JH4**E, AE **4JH5**E **4JHE** **4JH**-HTE, -HTZ, -HTZAE, -TE, -TZ



REF	OEM	
REC13554-0001	119773-42600 119773-42601	**6LPA**-DTP, -DTZP, -STP, -STZ **6LP**-DT, -DTE, -DTZE, -DTZY, -ST, -STE, -STZE, -STZY, -WDT, -WDTZY



REF	OEM	
REC22779-0001	124223-42091 124223-42092 128296-42070 128620-42200	**2GM20**F **3GM30**F **3HM,** F **3HM35**



REF	OEM	
CEF500162G	119574-42550 119574-42552	**6LY2**-ST, -STE, -STVY



REF	OEM	
REC119574-42550	119574-42550 119574-42552	**6LY2**-WDT, -WDTZY, -WST **6LY2A**-STE, -STP, -UTP **6LY2M**-WDT, -WST **6LY3**-ETP, -STP, -UTP **6LYA**-STE, -STP, -UTE



REF	OEM	
REC128628-42203	128628-42203	**6GHA**-ET, -ST, -STE, K-STI, M-STE **6GHD**-ST



REF	OEM	
CEF500161	119593-42200 119593-42201	**6LYM**-UTEHD **6LY**-ST, -STE, -STM, -STZY, -UT, -UTE, -UTM, UTZY, WST, WSTZY, -WUT, -WUTZY, -UTE, -STE



ANILLOS DE GOMA | RUBBER O'RINGS | ANELLI IN GOMMA | BAGUE EN CAOUTCHOUC

REF	OEM				
REC24311-000160	24311-000160	1	1GM, L, Y-C 2GM20, F, F-YEU, -YEU 2GMLP 3GM30, F, F-YEU 3HM35 3JH25A 3JH2L 3JH3E-YEU-E 3YM20 3YM27A 3YM30, AE	4CH-DT 4JH3, ZA, CE, -TCE, -TE, -DTE, -HTE 4LHA-DTE, -DTP, -DTZE, -DTZP, -HTE, -HTP, -HTZE, -STE, -HTZP, -STP, -STZE, -STZP 6LY2-STE 6LY2A-STP 6LYA2-UTP 6LYA-STE, -STP, -UTE	
REC24311-000120	24311-000120	1			
REC24311-000700	24311-000700	1	1GM, L, Y-C 1GM10 2GM20, F, F-YEU, -YEU 2GMLP 3GM30, F, F-YEU 3HM35	4LHA-DTE, -DTP, -DTZE, -DTZP, -HTE, -HTP, -HTZE, -STE, -HTZP, -STP, -STZE, -STZP 6LY2-STE 6LY2A-STP 6LYA2-UTP 6LYA-STE, -STP, -UTE	
REC24341-000240	24341-000240	1	1GM 2GM 3JH 4JH 4JL 6LY		
REC24311-000100	24311-000100	1	1GM, L, Y-C 1GM10 2GM20, F, F-YEU, -YEU 2GMLP 3GM30, F, F-YEU 3HM35		
REC129470-01550	129470-01550	1	3JH2, -TCE, E 3JH3 4JH, -DTE, -HTE, -HTZ, -HTZAE, -TE, -TZ 4JH2-DTE, -HTE, -TE, -UTE 4JH3, ZA, CE, -TCE, -TE, -DTE, -HTE		
REC24321-000350	24321-000350 24325-000350	1	**2GM20**F-YEU, -YEU **2GMLP** **3GM30,** F, F-YEU **3HYM35** **4CH**-DT **6GHA**-ET, -ST, -STE **6HGAK**-ST1	**6GHAM**-STE **6GSD**-ST **6KHL**-ST **6LP**-DT, -ST, -DTE, -STE, -DTP, -DTZE, -DTZE1, -DTZEP, -DTZEP1, -DTZY **6LPA**-STE, -STP2, -STZP2, -STZP3, -STZE, -STZEP, -STEZP1	
REC121850-51960	121850-51960	1	3JH 4JH		
REC105225-02020	105225-02020	1	2GM20F-YEU, -YEU 2GMLP 3GM30, F, F-YEU		
REC119609-32040	119609-32040	4	3JH25A 3JH40 3JH4E 4JH		
REC24311-000320	24311-000320	2	3JH 4JH		

ARANDELAS DE COBRE — COPPER WASHER — RONDELLE DI RAME — RONDELLES EN CUIVRE

REF	OEM	(mm)			
REC23414-120000	23414-120000	12 x 1.0	**1GM,** L, Y-C **1GM10** **2GM20,** F **2GMLP** **2GM20**F-YEU, -YEU	**4LHA**-DTE, -DTP, -DTZE, -DTZP, -HTE, -HTP, -HTZE, -HTZP, -STE, -STP, AQ-STZE, -STZP **6CX**-ETE **6CXM**-ETE **6GHS**-ET **6GHA**-ST, -STE **6GHAK**-ST1 **6GHAM**-STE **6GHD**-ST **6LP, A** **6LY2, 6LY3, 6LYA** **6LY**	
REC23414-100000	23414-100000	10 x 1.0	**3GM** **3GM30,** F, F-YEU **3HM35** **3JH2,** -TCE, E, L **3JH25A**		
REC23414-250000	23414-250000	25 x 1.0	**3JH3,** E-YEU-E **4JH,** -DTE, -HTE, -HTZ, -HTZA, -TE, -TZ **4JH2**-DTE, E, -HTE, -TE, -UTE		
REC23414-080000	23414-080000	8 x 1.0	**4JH3,** E, CE, ZA, -TCE, -TE, -DTE, -HTE **4LH**-DTE, -STE, -HTE, -TE, -DTZ, -HT, -HTZ, -HTZAY, -ST, -STZ, -STZAY, -UT, -UTZ, -UTZAY, -WST, -WSTZY		

ARANDELAS SELLO — SEAL WASHER — RONDELA TENUTA — RONDELLE AVEC JOINT

REF	OEM				
REC22190-060002	22190-060002	1	**1GM10** **1GM**L, Y-C **2GM20,** F, F-YEU, -YEU **2GMLP** **3GM30,** F, F-YEU **3JH25A** **4JH**-HTZAE, -TZ **4JH3,** E, CE, ZA, -TCE, -TE **SERIE 4LHA**		
REC22190-080002	22190-080002	1			
REC22190-100002	22190-100002	2	**3JH** **4JH**		
REC22190-140002	22190-140002	4			
REC22190-240002	22190-240002	10	**1GM10** **1GM**L, Y-C **6LY3**-ETP, -STP, -UTP		
REC22190-120002	22190-120002	2	**1GM10** **1GM**L, Y-C **2GM20,** F, F-YEU, -YEU **2GMLP** **3GM30,** F, F-YEU **3HM35** **3JH3,** E-YEU-E **3YM20** **3YM27**A **3YM30,** AE	**4JH**-HTZAE **4JH3,** ZA, E, -TCE, -TE, CE, -DTE, -HTE **4JHA3**CE **4JH**-HTE, -TE **4JH4**E, AE **4JH5**E SERIE **4LHA** SERIE **4LH** SERIE **6LP** SERIE **6LPA**	
REC43400-500450	43400-500450	2	**1GM10** **1GM**L, Y-C **2GM20,** F, F-YEU, -YEU **2GMLP** **3GM30,** F, F-YEU **3HM35** **3JH3,** E-YEU-E **3YM20** **3YM27**A **3YM30,** AE	**4JH**-HTZAE **4JH3,** ZA, CE, E, -TCE, -TE, CE, -DTE, -HTE, -HTE, -TE **4JH4**E, AE **4JH5E** SERIE **4LHA** SERIE **4LH**, SERIE **6LP** SERIE **6LPA**	

RETENES CIGÜEÑAL — CRANKSHAFT SEAL — PARAOLIO ALBERO MOTORE — JOINTS VILEBREQUIN

RETENES DELANTEROS — FFRONT SEAL — PARAOLIO ANTERIORE — JOINT DAVANT

REF	OEM		
REC121450-01801	121450-01801	**1GM10** **1GM**L, Y-C **2GM20,** F, F-YEU, -YEU **2GMLP** **2GMSZK** **3GM30,** F, F-YEU **3HM,** F **3HM35**	
REC129795-01800	129795-01800	**3JH2,** -TCE **3JH25A** **3JH2**E, L **3JH3,** E-YEU-E **3JH4**E **4JH,** -DTE, -HTE, -HTZ, -HTZAE, -TE, -TZ **4JH2**-DTE, -HTE, -TE, -UTE, E **4JH3**-DTE, -HTEM, -TE **4JH4**AE, E **4JHE**	
REC121850-01800	121850-01800	**4LH**-DTE, -DTZ, -HT, -HTE, -HTZ, -HTZAY, -ST, -STE, -STZ, -STZAY, -TE, -UT, -UTZ, -UTZAY, -WST, -WSTZY **4LHA**-DTE, -DTP, -DTZE, -DTZP, -HTE, -HTP, -HTZE, -HTZP, -STE, -STP, -STZE, -STZP **6LY**-ST, -STE, -STM, -STZY, -UT, -UTE, -UTM, -UTZY **6LY3**-ETP, -STP, -UTP **6LYM**-STE, -UTE	
REC119770-90090	119770-90090	**6LP**-DT, -DTE, -DTZE, -DTZY, -ST, -STE, -STZE, -STZY, -WDT, -WDTZY **6LPA**-DTP, -DTZP, -STP, -STZ	
REC119595-01800	119595-01800	**6LY**-WSY, -WSTZY, -WUT, -WUTZY **6LY2**-ST, -STE, -STP, -STVY, -WDT, -WDTZY, -WST, A-STE, A-STP, A-UTP, M-WDT, M-WST **6LYA**-STE, -STP, -UTE **6LYM**-UTEHD	

RETENES TRASEROS — REAR SEAL — PARAOLIO POSTERIORE — JOINT ARRIÈRE

REF	OEM		
REC124085-02220	124085-02220	**1GM,** L, Y-C **1GM10** **2GM20,** -YEU, F, F-YEU **2GMLP** **2GMSZK** **3GM30,** F, F-YEU **3HM35**	
REC124411-01780	124411-01780	**4LH**-DTE, -DTZ, -HT, -HTE, -HTZ, -HTZAY, -ST, -STE, -STZ, -STZAY, -TE, -UT, -UTZ, -UTZAY, -WST, -WSTZY **4LHA**-DTE, -DTP, -DTZE, -DTZP, -HTE, -HTP, -HTZE, -HTZP, -STE, -STP, -STZE, -STZP **6LY**-ST, -STE, -STM, -STZY, -UT, -UTE, -UTM, -UTZY, -WST, -WSTZY, -WUT, -WUTZY **6LY2**-ST, -STE, -STP, -STVY, -WDTZY, -WST **6LY2A**-STE, -STP, -UTP **6LY2M**-WDT, -WST **6LY3**-ETP, -STP, -UTP **6LYA**-STE, -STP, -UTE **6LYM**-STE, -UTE, -UTEHD	
REC123672-01782	123672-01782	**3JH2,** -TCE, E, L **3JH25A** **3JH3,** E-YEU-E **3JH4**E **3JH5**AE, E **3YM20** **3YM27**A **3YM30,** AE **4JH,** -DTE, -HTE, -HTZ, -HTZAE, -TE, -TZ **4JH2**-DTE, -HTE, -TE, -UTE, E **4JH3**-HTE, -TE **4JH4**AE, E **4JH5**E **4JHE** **4CH**-DT **6CX**-ETE, -GT **6CXM**-ETE	
REC119770-90290	119770-90290	**6LP**-DT, -DTE, -DTZE, -DTZY, -ST, -STE, -STZE, -STZY, -WDT, -WDTZY **6LPA**-DTP, -DTZP, -STP, -STZ	

KITS DE PISTONES — PISTONS SET — KIT PISTONI — KIT PISTONS

KITS AROS DE PISTONES — PISTONS RINGS SET — KIT FASCE PISTONI — KITS SEGMENT DE PISTONS

REF	OEM	
	72100-22500	**1GM** **1GML** **2GMSZK**



REF	OEM	
REC721575-22500	721575-22500 705311-22500	**1GM10** **2GM20,** -YEU, F, F-YEU **2GMLP** **3GM30,** F, F-YEU **3HM,** F



REF	OEM	
REC729120-22500	729120-22500	**3JH2,** -TCE, E, L **3JH25A**



REF	OEM	
REC129005-22500	129005-22500	**3JH4**E **3JH5**AE, E **4JH4**AE, E **4JH5**E



REF	OEM	
REC127610-22501	127610-22501	**4CH**-DT **4JH2**-HTE, -TE, -UTE



REF	OEM	
REC719000-22501	719000-22501	**4LH**-DTE, -HT, -HTE, -HTZ, -HTZAY, -ST, -STE, -STZ, -STZAY, -TE, -UT, -UTZ, -UTZAY **4LHA**-DTE, -DTP, -DTZE, -DTZP, -HTE, -HTP, -HTZE, -HTZP, -STE, -STP, -STZE, -STZP



REF	OEM	
REC129590-22510	129590-22510	**4JH**, -HTE, -HTZ, -HTZAE, -TE, -TZ, E



REF	OEM	
REC119593-22351	119593-22351	**4LH**-DTZ **6LY**-ST, -STE, -STM, -STZY, -UT, -UTE, UTM, -UTZY, -WST, -WSTZY, -WUT, -WUTZY **6LYA**-STE, -STP, -UTE **6LYM**-STE, -UTE, -UTEHD



REF	OEM	
REC119595-22300	119595-22300	**6LY2**-ST, -STE, -STP, -STVY, -WDT, -WDTZY, -WST **6LY2A**-STE, -STP, -UTP **6LY2M**-WDT, -WST



REF	OEM	
REC704571-22500	704571-22500	**YSM12**



REF	OEM	
REC728633-22500	728633-22500	**6GHA**-ET, -ST, -STE **6GHAK**-ST1 **6GHAM**-STE



REF	OEM	
REC119770-00250	119770-00250	**6LP**-DT, -DTE, -DTZE, -DTZY, -ST, -STE, -STZE, -STZY, -WDT, -WDTZY **6LPA**-DTP, -DTZP, -STP, -STZ



KITS COJINETES BANCADA — MAIN BEARING KITS — KIT BRONZE DI BANCO — KITS COUSSINET VILEBREQUIN

REF	OEM	
REC129150-02800	129150-02800	**3JH2,** E, L, -TCE **3JH25**A **4JH2**-DTE, E, -HTE, -TE, -UTE, **4JH**-DTE, E, -HTE, -HTZ, -HTZAE, -TE, -TZ



REF	OEM	
REC129690-02800	129690-02800	**3JH3** **4JH3**-DFTE, -HTE, -TE



REF	OEM	
REC719000-02800	719000-02800	**4LHA**-DTE, -DTP, -DTZE, -DTZP, -HTE, -HTP, -HTZE, -HTZP, -STE, -STP, -STZE, -STZP **4LH**-STE, -DTZ, -HT, -HTE, -HTZ, -HTZAY, -ST, -STE, -STZ, -STZAY, -TE, -UT, -UTZ, -UTZAY, -WST, -WSTZY



REF	OEM	
REC719717-02901	719717-02901	**3YM20** **3YM27**A **3YM30,** AE



KITS COJINETES BANCADA CENTRAL — MAIN BEARING KITS CENTRAL — KIT BRONZE DI BANCO CENTRO — KITS COUSSINET VILEBREQUIN CENTRAL

REF	OEM	
REC121450-02170	121450-02170	**3GM30,** F, F-YEU



KITS COJINETES BANCADA DELANTEROS — MAIN BEARING KITS FRONT — KIT BRONZE DI BANCO ANTERIORE — KITS COUSSINET VILEBREQUIN AVANT

REF	OEM	
REC121450-02100	121450-02100	**1GM,** L, Y-C **1GM10** **2GM20,** F, F-YEU, -YEU **2GMLP** **2GMSZK** **3GM30,** F, 30F-YEU



REF	OEM	
REC129001-02931	129001-02931	**3JH3**E-YEU-E **3JH4E** **3JH5**AE, E **4JH4**E, AE **4JH5E**



REF	OEM	
REC119770-02031	119770-02031	**6LPA**-DTP, -DTZP, -STP, -STZ **6LP**-DT, -DTE, -STZE, -DTZY, -ST, -STE, -STZE, -STZY, -WDT, WDTZY



KITS COJINETES BANCADA TRASERO — MAIN BEARING KITS REAR — KIT BRONZE DI BANCO POSTERIORE — KITS COUSSINET VILEBREQUIN ARRIÈRE

REF	OEM	
REC121450-02110	121450-02110	**1GM,** L, Y-C **1GM10** **2GM20,** F, F-YEU, -YEU **2GMLP** **2GMSZK** **3GM30,** F, 30F-YEU



KITS COJINETES BIELA — CONNECTING ROD BEARING KITS — KIT BRONZINE DI BIELLA — KITS ROULEMENT DE BIELLE

REF	OEM	
REC705311-23600	705311-23600	**1GM,** L, Y-C **1GM10** **2GM20,** F, F-YEU, -YEU **2GMLP** **2GMSZK** **3GM30,** F, 30F-YEU



REF	OEM	
REC129150-23601	129150-23601	**3JH2,** E, L, -TCE **3JH25A** **3JH3,** E-YEU-E **3JH4**E **3JH5**AE, E **4JH,** -DTE, E, -HTE, -HTZ, -HTZAE, -TE, -TZ **4JH2**-DTE, E, -HTE, -TE, -UTE **4JH3**-DTE, -HTE, -TE **4JH4**E, AE **4JH5**E



REF	OEM	
REC719174-23601	719174-23601	**4LHA**-DTE, -DTP, -DTZE, -DTZP, -HTE, -HTP, -HTZE, -HTZP, -STE, -STP, -STZE, -STZP **4LH**-DTE, -DTZ, -HT, -HTE, -HTZ, HTZAY, -ST, -STE, -STZ, -STZAY, -TE, -UT, -UTZ, -UTZAY, -WST, -WSTZY



REF	OEM	
REC719593-23601	719593-23601	**6LYA**-STE, -STP, -UTE **6LYM**-UTE, -STE, -UTEHD **6LY**-ST, -STE, -STM, -STZY, -UT, -UTE, -UTM, UTZY, -WST, -WSTZY, -WUT, -WUTZY



REF	OEM	
REC128625-23361	128625-23361	**6GHA**-ET, -ST, -STE **6GHAK**-ST1 **6GHAM**-STE **6GHD**-ST



REF	OEM	
REC719595-23600	719595-23600	**6LY2**-ST, -STE, -STVY, -STP, -WDT, -WDTZY, -WST **6LY2A**-ST, -STP, -UTP **6LY2M**-WDT, -WST **6LY3**-ETP, -STP, -UTP



REF	OEM		
MARK 2	**REC119770-00260**	119770–00260	
MARK 3	**REC119770-01010**	119770-01010	**6LPA**-DTP, -DTZP, -STP, -STZ
MARK 4	**REC119770-01020**	119770-01020	**6LP**-DT, -DTE, -DTZE, -DTZY, -ST, -STE, -STZE, -STZY, -WDT, -WDTZY
MARK5	**REC119770-01030**	119770-01030	
MARK 6	**REC119770-01040**	119770-01040	



KITS COJINETES AXIALES — AXIAL BEARING KIT — KIT BRONZINE ASSIAL — KITS ROULEMENT AXIAL

REF	OEM	
REC121450-02160	121450-02160	**2GM20,** F, F-YEU, -YEU **2GMLP** **2GMSZK** **3GM30,** F, F-YEU



REF	OEM	
REC119717-02930	119717-02930	**3YM20** **3YM27**A **3YM30,** AE



REF	OEM		
REC129150-02931	129150-02931	**3JH2,** E, L, -TCE **3JH25A** **3JH3,** E-YEU-E **3JH4**E **3JH5**AE, E	**4JH,** -DTE, E, -HTE, -HTZ, -HTZAE, -TE, -TZ **4JH2**-DTE, E, -HTE, -TE, -UTE **4JH3**-DTE, -HTE, -TE **4JH4**E, AE **4JH5**E



REF	OEM	
REC719000-02930	719000-02930	**4LHA**-DTE, -DSTP, -DTZE, -DTZP, -HTE, -HTP, -HTZE, -HTZP, -STE, -STP, -STZE, -STZP **4LH**-DTE, -DTZ, -HT, -HTE, -HTZ, HTZAY, -ST, -STE, -STZ, -STZAY, -TE, -UT, -UTZ, -UTZAY, -WST, -WSTZY



REF	OEM	
REC719593-02590	719593-02590	**6LY2**-ST, -STE, -STP, -STVY, -WDT, -WST, -WDTZY **6LY2A**-STE, -STP, -UTP **6LY2M**-WDT 3-UTP **6LYA**-STE, -STP, -UTE **6LYM**-UTE, -STE, -UTEHD **6LY**-ST, -STE, -STM, -STZY, -UT, -UTE, -UTM, UTZY, -WST, -WSTZY, -WUT, -WUTZY



REF	OEM	
REC119770-00130	119770-00130	**6LPA**-DTP, -DTZP, -STP, -STZ **6LP**-DT, -DTE, -DTZE, -DTZY, -ST, -STE, -STZE, -STZY, -WDT, -WDTZY



VÁLVULAS | VALVE | VALVOLA | SOUPAPE

RETENES | VALVE STEM SEALS | PARAOLIO VALVOLE | JOINTS D'HUILE

REF	OEM	
REC124950-11340	124950-11340	**1GM,** L, Y-C **1GM10** **2GM20,** F, F-YEU, -YEU **2GMLP** **2GMSZ** **3GM30,** F, F-YEU **3HM,** F **3HM35**



REF	OEM	
REC127616-11280	127616-11280	**4CH-DT** **6CX**-ETE, -GT, M-ETE



REF	OEM	
REC121850-11150	121850-11150	**6GHA**-ET, -ST, -STE **6GHAK**-ST1 **6GHAM**-STE **6GHD**-ST



REF	OEM	
REC119770-91030	119770-91030	**6LPA**-DTP, -DTZP **6LP**-DT, -DTE, -DTZE, -DTZY, -ST, -STE, -STZE, -STZY, -WDT, -WDTZY



RETENES VÁLVULAS ADMISIÓN Y ESCAPE — INTAKE & EXHAUST SEAL VALVES — PARAOLIO VALVOLE ASPIRAZIONE E SCARICO — JOINT D'HUILE, ADMISSION ET ÉCHAPPEMENT

	ADMISIÓN INTAKE ASPIRAZIONE ADMISSION	OEM	ESCAPE EXHAUST SCARICO ÉCHAPPEMENT	OEM
4LHA-HTP, -HTZE, -HTZP, -STE, -STP, -STZE, -STZP **4LH**-DTE, -DTZ, -HT, -HTE, -HTZ, -HTZAY, -ST, -STE, -STZ, -STZAY, -TE **6LY2**-ST, -STE, -STVY, -STP, -WDT, -WDTZY, -WST **6LY2A**-STE, -UTP **6LY2M**-WDT, -WST **6LYA**-STE, -STP, -UTE **6LYM**-UTE, -STE, -UTEHD **6LY**-ST, , -STE, -STM, -STZY, -UT, -UTE, -UTM, UTZY, -WST, -WSTZY, -WUT, -WUTZY	**REC121850-11150**	121850-11150	**REC119171-11150**	119171-11150
3YM20 **3YM27**A **3YM30,** AE	**REC119717-11340**	119717-11340	**REC119717-11350**	119717-11350
3JH2, L, E, -TCE **3JH25**A **3JH3,** E-YEU-E **3JH4**E **3JH5**AE, E **4JH2**-DTE, E, -HTE, -TE, -UTE **4JH3**-DTE, -HTE, -TE **4JH4**E, AE **4JH5**E **4JH**E, -HTE, -HTZ, -HTZAE, -TE **6LY3**-ETP, -STP, -UTP	**REC124460-11340**	124460-11340	**REC121400-11340**	121400-11340







VÁLVULAS ADMISIÓN Y ESCAPE — INTAKE & EXHAUST VALVES — VALVOLE ASPIRAZIONE E SCARICO — SOUPAPES ADMISSION ET ÉCHAPPEMENT

	ADMISIÓN INTAKE ASPIRAZIONE ADMISSION	OEM	ESCAPE EXHAUST SCARICO ÉCHAPPEMENT	OEM
4LH-DTE, -DTZ, -HTE, -HTZ, -HTZAY, -ST, -STE, -STZ, -STZAY, -TE, -UT, -UTZ, -UTZAY, -WST, -WSTZY **4LHA**-DTE, -DTP, -DTZE, -STZP, -STE, -STP, -STZE, -STZP **6LY**-ST, -STE, -STM, -STZY, -UT, -UTE, -UTM, -UTZY, -WST, -WSTZY, -WUT, -WUTZY **6LY2**-ST, -STE, -STP, -STVY, -WDT, -WDTZY, -WST, -STE, -STP **6LY2A**-UTP **6LY2M**-WDT, -WST **6LYA**-STE, -STP, UTE **6LYM**-STE, -UTE, -UTEHD	**REC119173-11101**	119173-11101	**REC119593-11110**	119593-11110
6LP-DT, -DTE, -DTZE, -DTZY, -ST, -STE, -STZE, -STZY, -WDT, -WDTZY **6LPA**-DT, -DTZP	**REC119770-00480**	119770-00480	**REC119770-00490**	119770-00490
4LHA-HTE, -HTP, -HTZE, -HTZP	**REC121850-11100**	121850-11100		
6GHA-ET, -ST, -STE **6GHAK**-ST1 **6GHAM**-STE **6GHD**-ST	**REC128619-11100**	128619-11100	**REC128619-11110**	128619-11110
3JH5AE, E **4JH4**AE **4JH5**	**REC129005-11100**	129005-11100		
3JH2, -TCE, E, L **3JH25A** **3JH3** **4JH**-DTE, -HTE, E **4JH2**-DTE, -HTE, -TE, -UTE, E **4JH3**-TE	**REC129100-11100**	129100-11100	**REC129100-11112**	129100-11112
4JH, -HTZ, -HTZAE, -TE, TZ **4JH3**-DTE, -HTE	**REC129120-11100**	129120-11100	**REC129120-11110**	129120-11110
3HM, F **3HM35**	**REC104211-11100**	104211-11100	**REC104211-11110**	104211-11110
1GM, L, Y-C **1GM10** **2GM20,** F, F-YEU, -YEU **2GMLP** **2GMSZK** **3GM30,** F, 30F-YEU	**REC105225-11100**	105225-11100	**REC105225-11110**	105225-11110
YSM12 **YSB12** **YSE12**	**REC104511-11100**	104511-11100		
4LH-HT, -HTZ, -HTZAY **4LHA**-HTE, -HTZE, -HTZP			**REC119171-11110**	119171-11110



SISTEMA DE ESCAPE Y ADMISIÓN
EXHAUST & INTAKE SYSTEM
SISTEMA DI SCARICO E ASPIRAZIONE
SYSTEME D'ECHAPPEMENT ET D'ADMISSION

CODOS — ELBOWS — GOMITI — COUDES

REF	OEM			PIPA RACOR RACORDO RACORD	
MAR3520	104214-13531 104214-13521 104070-13520 128370-13600 128990-13520 127070-13520	**1GM, 1GM10** **2GM20**F, FVE, F-YEU, FC-YEU **2GM**FYE, FL **3GM,** F, FY-E, FYE-E, FLE **3GMD** **3HM** **3GM30,** VE, B, C, -YEU, C-YEU, F-YEU, FC-YEU **3HM35,** C **3YM20** **3YM30,** AE	REC128370-13201	3/8"	2"



REF	OEM				
REC129792-13552INOX	129792-13552 129792-13551 129792-13550 129671-13551 129579-13551	**4JH**-TZ, -TZA, -HTZ, -HTZA, -HTZY, -DTZ, -DTZP, -DTZA, -DTZY, -TZAE, -HTZAE, -TE, -TZ, -TZA, -TZAY, -TZ1, -TZ2 **4JH2**-TE, -HTE, -DTE, -UTE, -ETB, -DTZ **4JH3**-T, -T1, -TZA, -TZAY, -HTZ1, -HTZA, -HTZY1, -HTZAY	REC129472-13520	1"	3"



REF	OEM	
MAR13200	724770-13200	**2QM** **2QM20**



REF	OEM				
MAR13561	129470-13561 129470-13560 129670-13560 129670-13561	**3JH2** **3JH3,** E **3JH5**E **4JH2**E, CE, TE, -DTE **4JH3,** E **4JHE**	REC129472-18090	1"	3"



CODO ESCAPE INOX | SS ELBOW | GOMITO SCARICO INOSS | COUDE D'ÉCHAPPEMENT INOX

REF	OEM				
REC119181-13500INOX	119181-13500	4LH-STE	REC119171-13510	1-1/4"	4"



REF	OEM			
REC119173-13501INOX	119173-13501	**4LHA**-HTE (150 HP), -DTE (190 HP), -STE (230 HP), -HTP/-STP/ -ST2P (240 HP)	1-1/4"	3-1/2"



REF	OEM			
MAR119773-13501INOX **SED3092500**	119773-13501 119773-13500	**4LH**-STE, -YA, -HTP, -DTP, -STP **4LHA**-THE, -DTE, -HTP, -DTP **6LP**-DTE, -STE **6LPA**-STP, -DTP **8LV**	1-1/4" BSPT THREAD INLET	4"



REF	OEM				
MAR119171-13490INOX	119171-13490	4LH SERIES/-HTZ, -HTZAY, -HTE, -TE	REC119171-13510	1-1/4"	3-1/2"



REF	OEM				
MAR119171-13530INOX	119171-13530	4LH SERIES/ -DTE, -HTE, -TE, -DTZ	REC119171-13510	1-1/4"	3-1/2"



REF	OEM				
MAR119174-13501INOX	119174-13501	4LH SERIES/ -UTZ, UTZAY, STZ, STZAY, STE, WST, WSTZAY	REC119171-13510	1-1/4"	4"



REF	OEM				
MAR119574-13530INOX	119574-13530	6LY SERIES/ 3-ETP, A-UTE(P), A-STE(P), A-STP, 2A-STP, 2-STE		1-1/2"	5"

new



REF	OEM				
MAR119588-13501INOX	119588-13501	6LY SERIES/ -UTM, UTZY, WUTZY, -STE, M-UTE, M-STE		1-1/2"	5"

new



REF	OEM				
MAR128370-13550INOX	128370-13550	3GM30 SERIES/ VE, B,C/ 3HM35, C			2"

new



REF	OEM				
MAR128890-13530INOX	128890-13530	2YM15/ 2GM20F, FC-YEU/3YM20, 30, 30AE, 3GM-30FC-YEU	REC128370-13201	7/8"	2"

new



REF	OEM				
MAR129470-13550INOX	129470-13550	3JH2BE, CE, E/ 4JH2CE	REC129472-18090	1"	2"

new



REF	OEM				
MAR129671-13552INOX	129671-13552	4JH4-HTE1,-HTE / 4JH3-HTE,-DTE / 4JF57 / 4JH80 / 4JH110	REC129472-13520	1"	3"

new



UNIDADES DE TRANSMISIÓN
TRANSMISSION UNIT
UNITÀ DI TRASMISSIONE
EMBASES ET PIÈCES

RECmar

ÁNODO — ANODE — ANODI — ANODE

	REF	OEM	
ZN	REC27210-200300	27210-200300	2GM20, F, F-YEU, -YEU 2GMLP, SZK 3GM30, F, F-YEU 3HM, F 3HM35 6GHA-ET, -ST, -STE, K-ST1, M-STE 6GHD-ST 6KHL-ST



	REF	OEM	
ZN	REC27210-200200	27210-200200	1GM, L, Y-C 1GM10 6GHA-ET, -ST, -STE, K-STI, M-STE 6GHD-S 6KHL-ST



	REF	OEM	
ZN	REC27210-200370	27210-200370	6GHA-ET, -ST, -STE, K-ST1, M-STE 6GHD-ST 6CX-GT



	REF	OEM	
ZN	REC27200-400400	27200-400400	6LA-DT, -DTE, -ST 6LAK-ST, -ST1 6LAH-ST, -STE 6LAA, E, -VTE 8LLA-DTE



	REF	OEM	
ZN	REC27210-200550	27210-200550 177301-549000	6LYM-UTEHD 6LY-ST, -STE, -STM, -STZY, -UT, -UTE, -UTM, -UTZY, -WST, -WSTZY, -WUT, -WUTZY SD20, 25, 30, 31 4LH-STE



	REF	OEM	
ZN	REC104211-41300	104211-41300	YSE8 8FS YSE10 12PSP
AL	REC104211-41300AL		



	REF	OEM	
ZN	REC27210-300400	27200-300400	6GHA-ET, -ST, -STE, K-ST1, M-STE 6GHD-ST 6KHL-ST



	REF	
ZN	REC27210-01302	70-85 HP
AL	REC27210-01302AL	



	REF	OEM	
ZN	REC104211-41300	104211-41300	SEALDRIVE
AL	REC104211-41300AL		



	REF	OEM	
ZN	REC196630-02670	196630-02670	D27 D36
AL	REC196630-02670AL		



TUERCA HÉLICE — BLADE NUT — DADO ELICA — ÉCROU HÉLICE

	REF	OEM	
ZN	**REC196350-09910**	196350-09910	ZT350 ZT370
AL	**REC196350-09910AL**		



COLA VELERO — SAILBOAT GEARCASE — PIEDE VELA — EMBASE DE VELIER

	REF	OEM	
AL	**REC196450-02501AL**	196440-02660 196450-02501	SD20 SD25 SD30 SD31 SD40 SD50 SD60
ZN	**REC196450-02501**		
AL	**REC196440-02690AL**	196440-02690	
ZN	**REC196440-02690**		



REC196450-02501AL
REC196450-02501



REC196440-02690AL
REC196440-02690

	REF	OEM	
ZN	**REC196350-02570**	196350-02570	ZT350 ZT370
AL	**REC196350-02570AL**		
ZN	**REC196350-02550**	196350-02550	
AL	**REC196350-02550AL**		



REC196350-02570
REC196350-02570AL



REC196350-02550
REC196350-02550AL

TIMÓN — RUDDER — TIMONE — DERIVE

	REF	OEM	
ZN	REC196640-02680	196640-62680	B63 D36A D27A
AL	REC196640-02680AL		



ALETA CABITACIÓN — CABITATION FLAP — FLAP CABINAZIONE — PLAQUE STERNDRIVE

	REF	OEM	
ZN	REC196350-02350	196350-02350	ZT350 ZT370
AL	REC196350-02350AL		



KITS DE ÁNODOS — ANODES KIT — KIT ANODI — KIT ANODES

	REF	
ZN	RECKITYZT350-ZT370ZN	
AL	RECKITYZT350-ZT370AL	ZT350-ZT370
MG	RECKITYZT350-ZT370M	

KIT		OEM		
REC119574-18790Z		119574-18790		4LHA-STZP 4LH-DTE, -DTZ, -HT, -HTE, -HTZ, -HTZAY, -ST, -STE, -STZ, -STZAY, -TE, -UT, -UTZ, -UTZAY
	REC119574-18790	177301-54900		
			REC119574-18790TP	
REC1195574-44150Z		119574-44150		4LHA-DTE, -DTP, -DTZE, -DTZP, -HTE, -HTP, -HTZE, -HTZP, -STE, -STP, -STZE
	REC27210-200370	27210-200370		
			REC27210-200370TP	



ÁNODO ANODE

REF	OEM	(kg)	
ZN **TEN01301**	27210-200300		2GM20, F, F-YEU, -YEU 2GMLP, SZK 3GM30, F, F-YEU 3HM, F 3HM35 6GHA-ET, -ST, -STE, K-ST1, M-STE 6GHD-ST 6KHL-ST



REF	OEM	(kg)	
ZN TEN01302			70-85 HP



REF	OEM	(kg)	
ZN TEN01303	27210-200200		1GM, L, Y-C 1GM10 6GHA-ET, -ST, -STE, K-STI, M-STE 6GHD-S 6KHL-ST



REF	OEM	(kg)	
ZN TEN01311	27200-300400		6GHA-ET, -ST, -STE, K-ST1, M-STE 6GHD-ST 6KHL-ST



REF	OEM	(kg)	
ZN TEN01312	27210-200370		6GHA-ET, -ST, -STE, K-ST1, M-STE 6GHD-ST 6CX-GT



ANODI ANODE

REF	OEM	(kg)	
ZN **TEN01306**	27210-200550 177301-549000		6LYM-UTEHD 6LY-ST, -STE, -STM, -STZY, -UT, -UTE, -UTM, -UTZY, -WST, -WSTZY, -WUT, -WUTZY SD20, 25, 30, 31 4LH-STE



REF	OEM	(kg)	
ZN **TEN01300**	104211-41300		YSE8 8FS YSE10 12PSP



REF	OEM	(kg)	
ZN **TEN01310**	27200-400400		6LA-DT, -DTE, -ST 6LAK-ST, -ST1 6LAH-ST, -STE 6LAA, E, -VTE 8LLA-DTE



REF	OEM	(kg)	
ZN **TEN01308**	104211-41300		SEALDRIVE



REF	OEM	(kg)	
ZN **TEN01304**	196630-02670		D27 D36



TRIM

REF	OEM	(kg)	
ZN **TEN01393-1**	196350-07360		ZT350 ZT370



COLA VELERO — SAILBOAT GEARCASE — PIEDE VELA — EMBASE DE VELIER

REF	OEM	(kg)	
ZN **TEN01305/1**	196440-02660 196450-02501		SD20 SD25 SD30
ZN **TENPLAC-1**	196440-02690		SD31 SD40 SD50 SD60


TEN01305/1


TENPLAC-1

REF	OEM	(kg)	
ZN **TEN01391-1**	196350-02570		ZT350 ZT370
ZN **TEN01390-1**	196350-02550		


TEN01391-1


TEN01390-1

TUERCA HÉLICE — BLADE NUT — DADO ELICA — ÉCROU HÉLICE

REF	OEM	(kg)	
ZN **TEN01392-1**	196350-09910		ZT350 ZT370



TIMÓN — RUDDER — TIMONE — DERIVE

REF	OEM	(kg)	
ZN **TEN01319**	196640-62680		B63 D36A D27A



ALETA CABITACIÓN — CABITATION FLAP — FLAP CABINAZIONE — PLAQUE STERNDRIVE

REF	OEM	(kg)	
ZN **TEN01394-1**	196350-02350		ZT350 ZT370



KITS DE ÁNODOS — ANODES KIT — KIT ANODI — KIT ANODES

REF	OEM	(kg)	
ZN TENKITYANMARSTD		0,94	ZT350-ZT370



new

KIT		OEM		(KG)	
TEN01317T		119574-18790			4LHA-STZP
	TEN01317	177301-54900			4LH-DTE, -DTZ, -HT, -HTE, -HTZ, -HTZAY, -ST,
			TEN01317TP		-STE, -STZ, -STZAY, -TE, -UT, -UTZ, -UTZAY
TEN01316T **TEN01318T**		119574-44150			
	TEN01316 **TEN01318**	27210-200370			4LHA-DTE, -DTP, -DTZE, -DTZP, -HTE, -HTP, -HTZE, -HTZP, -STE, -STP, -STZE
			TEN01316TP **TEN01318TP**		



ÁNODO — ANODE — ANODI — ANODE

	REF	OEM		
ZN	**CMC272100-20030**	27210-200300	**2GM20,** F, F-YEU, -YEU **2GM**LP, SZK **3GM30,** F, F-YEU **3HM,** F	**3HM35** **6GHA**-ET, -ST, -STE, K-ST1, M-STE **6GHD**-ST **6KHL**-ST



	REF	OEM	
ZN	**CMC10421141-300**	104211-41300	YSE8 8FS YSE10 12PSP



COLA VELERO — SAILBOAT GEARCASE — PIEDE VELA — EMBASE DE VELIER

	REF	OEM	
ZN	CM19642002652Z	196420-02652 196450-02492	SD20 SD25 SD30 SD31 SD40 SD50 SD60
AL	CM19642002652A		



	REF	OEM	
ZN	CM19644002660KITZ	196440-02660 196450-02501	SD20 SD25 SD30 SD31 SD40 SD50 SD60
AL	CM19644002660KITA		



SOPORTE MOTOR — ENGINE MOUNT SCREW — SUPPORTI MOTORE — SUPPORT MOTEUR

REF	OEM	max KG	
GS38120	124770-12540	40 Kg / 88 lb	

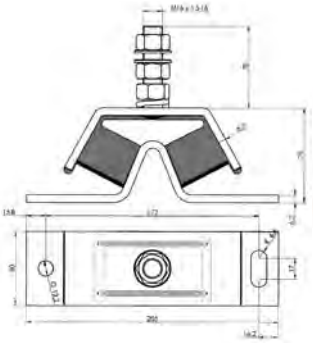

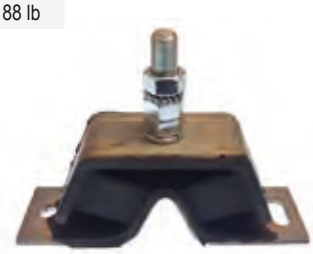

REF	OEM	max KG	
GS38107	128270-08341	75 Kg 165 lb	**2GM20,** VE, B, F, FVE **3GM30,** B, C, F



REF	OEM	max KG	
GS38108	124772-08341	100 Kg 220 lb	**2GM20,** VE, B, F, FVE **3GM30,** VE, B, C, F, FVE **3JH2**CE, -TCE, E, BE, S-TBE, G-TBE, S-TE, G-TE **1GM10**V **2GM20**V, FV **3GM30**V, FV **3JHM35** **3HM35**F



REF	OEM	max KG	
GS38121	121370-08351	150 Kg 330 lb	**3JH2**CE, -TCE, E, BE, S-TBE, G-TBE, S-TE, G-TE **4JH**-DTE, -HTE, E, -TE **4JH2**E, -TE, -HTE, -DTE, -UTE, -UTB **3JH2**CE, -TCE, E, BE, S-TBE, G-TBE, S-TE, G-TE



GUÍA KITS DE RETENES TRASMISIÓN | TRANSMISION SEAL KIT GUIDE | GUIDA KITS GUARNIZIONE TRANSMISSIONE | GUIDE KIT JOINTS D'EMBASE

KIT	REF					UN.
	196313-02591	RETÉN	OIL SEAL	TENUTA	JOINT D'HUILE	2
RECSD20	24321-000950	TÓRICA	O-RING	FASCIA TONDA	JOINT TORIQUE	2
	24341-000125	JUNTA	GASKET	GUARNIZIONE	JOINT	1
	196313-02591	RETÉN	OIL SEAL	TENUTA	JOINT D'HUILE	2
RECSD25	196420-12240	TÓRICA	O-RING	FASCIA TONDA	JOINT TORIQUE	2
	24341-000125	JUNTA	GASKET	GUARNIZIONE	JOINT	1
	196440-02871	RETÉN	OIL SEAL	TENUTA	JOINT D'HUILE	2
RECSD40	24321-000950	TÓRICA	O-RING	FASCIA TONDA	JOINT TORIQUE	2
	24341-000125	JUNTA	GASKET	GUARNIZIONE	JOINT	1

SD20

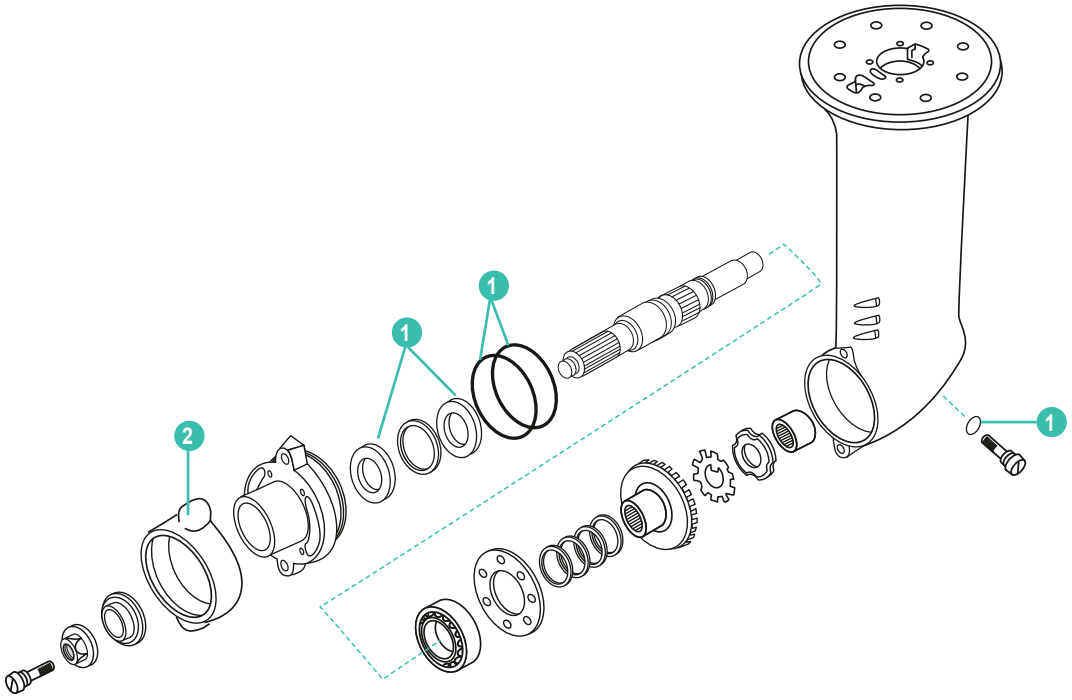

	REF	OEM				
1	RECSD20		KIT	KIT	KIT	KIT
2	TEN01305	196420-02640	ÁNODO	ANODE	ANODO	ANODE

SD25

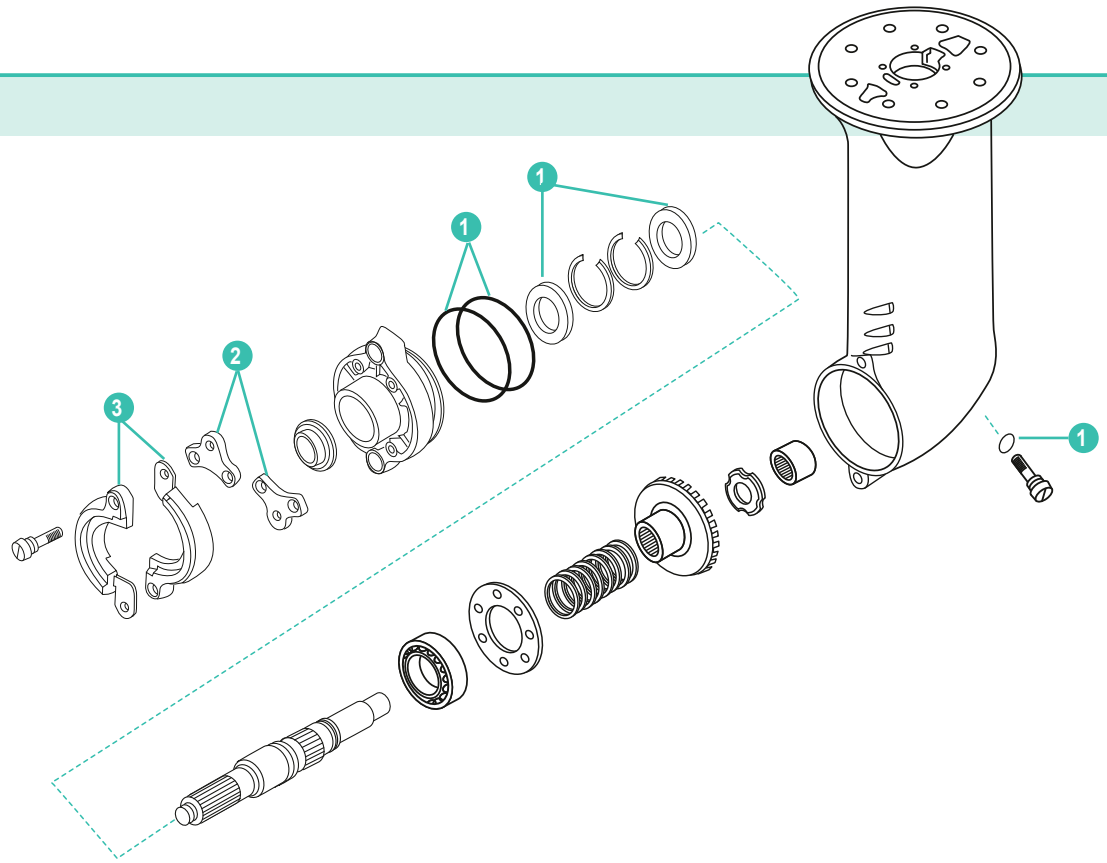

REF	OEM				
1 RECSD25		KIT	KIT	KIT	KIT
2 TEN01305/1	126450-02501	ÁNODO	ANODE	ANODO	ANODE
3 TENPLAC-1	196440-02690	ÁNODO	ANODE	ANODO	ANODE

SD40/50

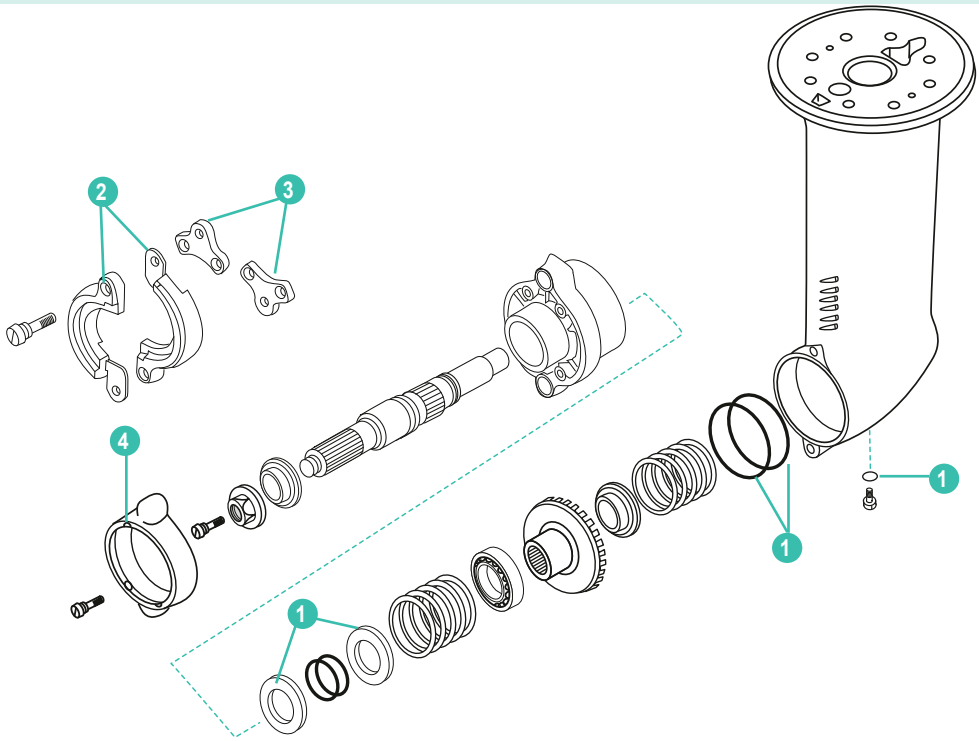

REF	OEM				
1 RECSD40		KIT	KIT	KIT	KIT
2 TEN01305/1	126450-02600	ÁNODO	ANODE	ANODO	ANODE
3 TENPLAC-1	196440-02690	ÁNODO	ANODE	ANODO	ANODE
4 TEN01305	196420-02652	ÁNODO	ANODE	ANODO	ANODE

SISTEMA DE PROPULSIÓN
PROPULSION SYSTEM
SISTEMA DI PROPULSIONE
SYSTEME DE PROPULSION

HÉLICES ALUMINIO E INOXIDABLE DE 3 Y 4 PALAS
3 & 4 BLADE ALUMINIUM & SS PROPELLERS
ELICHE ALLUMINIO E INOX DA 3 E 4 PALE
HELICE ALUMINIUM ET INOX 3 ET 4 PALES

CÓDIGO DE REFERENCIAS — PART NO. CODING SYSTEM — SISTEMA DI CODICE — CODAGE DES REFERENCES

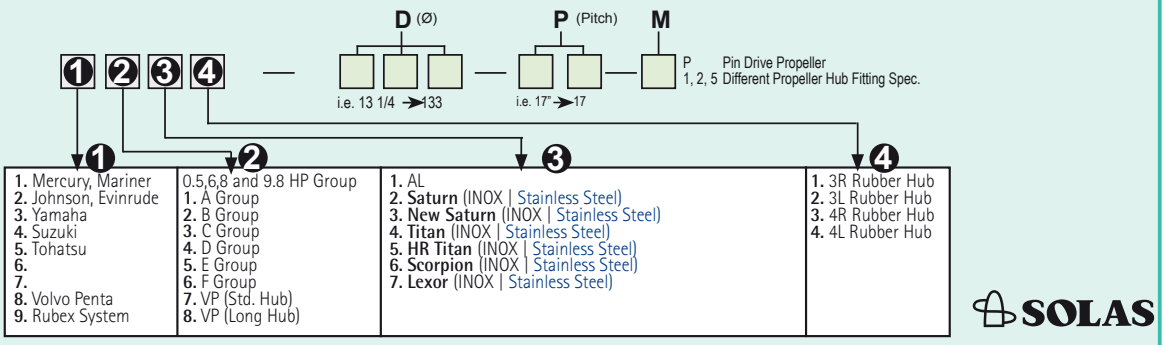

SOLAS

AMITA 3

SOLAS

Hélice de aluminio con núcleo de goma de gran resistencia.

Aluminum propeller with heavy duty rubber hub.

Eliche di alluminio con mozzi in gomma ad alta resistenza.

Hélice en aluminium avec moyeu en caoutchouc



AMITA 3 PLUS

SOLAS

Diseño de pala grande para un área más grande.
High camber blade and large blade area design.
Con un'area più ampia nelle pale.
Conception d'une grande pale pour une plus grande surface.



	CUBO ESTÁNDAR / STANDAR HUB / MOZZO STANDARD / NOYAU STANDARD	B	D	P	R	AL	
						AMITA 3	AMITA 3 PLUS
SZ110, 111, 160, 161	9,5 mm	3	15.5	15	L	SOL8712-150-15	
			14.8	17	L	SOL8712-148-17	
			14.5	19	L	SOL8712-148-17	
			14.3	21	L	SOL8712-143-21	
SZ200, 251, 301	11,5 mm	3	15	15	L	SOL8812-150-15	
			14,8	17	L	SOL8812-148-17	
			14.5	19	L	SOL8812-145-19	
			14.3	21	L	SOL8812-143-21	
			14.2	23	L	SOL8812-142-23	
			15.8	15	L		SOL8812-158-15
			15.5	17	L		SOL8812-155-17
			15.3	19	L		SOL8812-153-19
			15.3	21	L		SOL8812-153-21

SOLAS

HELICES DE ACERO INOXIDABLE
Para colas YANMAR ZT350 y ZT370
Hélices delanteras de 4 palas. Hélices traseras de 3 palas.
19 estrías y escape a través de la hélice.

STAINLESS STEEL PROPELLERS
For YANMAR sterndrives ZT350 & ZT370
Front propellers with 4 blades.
Rear propellers with 3 blades.
19 Tooth Spline and Thru hub exhaust.

ELICHE IN ACCIAIO INOX
Per piedi YANMAR ZT350 e ZT370
Elica anteriori di 4 pale. Elica posteriore di 3 pale.
19 denti, scarico all'elica.

HÉLICES EN ACIER INOX.
Pour Yanmar ZT350 et ZT370.
Hélice avant 4 pales.
Hélice arrière 3 pales.
19 cannelures et l'échappement pour l'hélice.

OEM	DELANTERO FRONT ANTERIORE AVANT	TRASERO REAR POSTERIORE ARRIÈRE	A	B	D	P	R	AL
196350-09400	✓		19	4	16"	20	L	**SOL1654-160-20**
		✓		3	14 3/8"	20	R	**SOL1651-144-20**
	✓			4	16"	21	L	**SOL1654-160-21**
		✓		3	14 3/8"	21	R	**SOL1651-144-21**
196350-09420	✓		19	4	15 3/4"	22	L	**SOL1654-158-22**
196350-09720		✓		3	14 1/4"	22	R	**SOL1651-143-22**
	✓			4	15 3/4"	23	L	**SOL1654-158-23**
		✓		3	14 1/4"	23	R	**SOL1651-143-23**
196350-09440	✓		19	4	15 1/2"	24	L	**SOL1654-155-24**
196350-09740		✓		3	14"	24	R	**SOL1651-140-24**
	✓			4	15 1/2"	25	L	**SOL1654-155-25**
		✓		3	14"	25	R	**SOL1651-140-25**
196350-09460	✓		19	4	15 1/2"	26	L	**SOL1654-155-26**
196350-09760		✓		3	14"	26	R	**SOL1651-140-26**
	✓			4	5"	27	L	**SOL1654-155-27**
		✓		3	13 3/4"	27	R	**SOL1651-140-27**
196350-09480	✓		19	4	5"	28	L	**SOL1654-150-28**
196350-09780		✓		3	13 3/4"	28	R	**SOL1651-138-28**



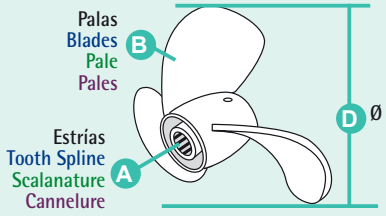

P Paso
Pitch
Passo
Pas

R Rotación L (izquierda) R (derecha)
Rotation L (left) R (Right)
Rotazione L (SX) R (DX)
Rotation L (gauche) R (droit)

REF--> OEM

REF	OEM	
A		
AMITA 3		774
AMITA 3 Plus		774
B		
BRA125-1/2x1/2		724
BRA125-1/2x3/4		724
BRA125-1/2x3/8		724
BRA125-1/4x1/2		724
BRA125-1/4X3/8		724
BRA125-1x3/4		724
BRA125-3/16x1/4		724
BRA125-3/4x3/4		724
BRA125-3/8x1/2		724
BRA125-3/8x3/8		724
BRA125-5/16x3/8		724
BRA125-5/8x3/4		724
BRA125-5/8x3/8		724
C		
CEF500100GX		736
CEF500113		710-753
CEF500114T		712
CEF500161	119593-42200	754
CEF500161	119593-42201	754
CEF500162G	10-1286-01	715-736
CEF500162G	119574-42550	754
CEF500162G	119574-42552	754
CM19642002652A	196420-02652	771
CM19642002652A	196450-02492	771
CM19642002652Z	196420-02652	771
CM19642002652Z	196450-02492	771
CM19644002660KITA	196440-02660	771
CM19644002660KITA	196450-02501	771
CM19644002660KITZ	196440-02660	771
CM19644002660KITZ	196450-02501	771
CMC10421141-300	104211-41300	771
CMC272100-20030	27210-200300	710-711-712-713-715-771
G		
GS30430		724
GS30431		724
GS30432		724
GS30433		724
GS31055		724
GS31056		724
GS31066		724
GS35031		724
GS35032		724
GS35049		723
GS35050		723
GS35051		723
GS35052		723
GS35053		723
GS35054		723
GS35055		723
GS38107	128270-08341	771
GS38108	124772-08341	771
GS38120	124770-12540	771
GS38121	121370-08351	771
J		
JOH09-810B		712
M		
MAR119171-13490INOX	119171-13490	765
MAR119171-13530INOX	119171-13530	765
MAR119174-13501INOX	119174-13501	765
MAR119574-13530INOX	119574-13530	766
MAR119588-13501INOX	119588-13501	766
MAR119773-13501INOX	119773-13500	765
MAR119773-13501INOX	119773-13501	765
MAR128370-13550INOX	128370-13550	766
MAR128890-13530INOX	128890-13530	766
MAR129470-13550INOX	129470-13550	766
MAR129671-13552INOX	129671-13552	766
MAR13200	724770-13200	764
MAR13561	129470-13560	764
MAR13561	129470-13561	764
MAR13561	129670-13560	764
MAR13561	129670-13561	764
MAR3520	104070-13520	764
MAR3520	104214-13521	764
MAR3520	104214-13531	764
MAR3520	127070-13520	764
MAR3520	128370-13600	764
MAR3520	128990-13520	764
R		
RAC1/2F-1/2M		724
RAC1/2X16		724
RAC1/2X18		724
RAC1/2X20		724
RAC1000MA30		718
RAC1000VMA		718
RAC120AS		719
RAC2010PM-OR		718
RAC2010SM-OR		718
RAC2010TM-OR		718
RAC2010TM-OR		720
RAC2020PM-OR		718
RAC2020SM-OR		718
RAC2020TM-OR		718
RAC2040PM-OR		718
RAC2040SM-OR		718
RAC2040TM-OR		718
RAC230R2		719
RAC245R2		719
RAC3/8F-3/8M		724
RAC3/8X10		724
RAC3/8X12		724
RAC3/8X14		724
RAC460R2		719
RAC490R2		719
RAC500MA30		718
RAC75/1000MA30		718
RAC75/500MAX		718
RAC900MA30		718
RAC900VMA		718
RACR11T		719
RACR120P		719
RACR120SM		719
RACR120TM		719
RACR12P		719
RACR12S		719
RACR12T		719
RACR20P		719
RACR20S		719
RACR20T		719
RACR24P		719
RACR24S		719
RACR24T		719
RACR25P		719
RACR25S		719
RACR25T		719
RACR26P		719
RACR26S		719
RACR26T		719
RACR60P		719
RACR60S		719
RACR60T		719
RACR90P		719
RACR90S		719
RACR90T		719
RACRK19492UL		725
RACRK20726		725
RACRK22628		725
REC040122		747
REC104211-11100	104211-11100	763
REC104211-11110	104211-11110	763
REC104211-41300	104211-41300	767
REC104211-41300AL	104211-41300	767
REC104211-42090	104211-42090	737-752
REC104211-49160	104211-49160	735
REC104211-77011	104211-77010	731
REC104211-77011	104211-77011	731
REC104500-55710	104500-55710	710-711-712-717
REC104511-11100	104511-11100	763
REC104511-78780E	104511-78780E	710-711-712-737
REC105225-02020	105225-02020	755
REC105225-02040	105225-02040	753
REC105225-11100	105225-11100	763
REC105225-11110	105225-11110	763
REC105582-49200	105582-49200	734
REC105582-49200	124223-49250	734
REC105582-49200	181130-49200	734
REC105582-49200		710-711-712-713
REC105582-52010	105582-52010	725
REC105582-82041	105582-82041	753
REC114362-77011	114361-77011	730
REC114362-77011	114362-77010	730
REC114362-77011	114362-77011	730
REC114362-77011	114399-77010	730
REC119000-01771	119000-01771	751
REC119000-32020	119000-32020	722
REC119000-42021	119000-42021	736
REC119005-35100	109005-35170	721
REC119005-35100	119005-35100	721
REC119005-35100	119005-35151	721
REC119005-35100		713-714
REC119100-11360	119100-11360	749
REC119100-12113	119100-12113	749
REC119171-11110	119171-11110	763
REC119171-11150	119171-11150	763
REC119171-13510	119171-13510	750-765
REC119171-18010	119171-18010	726
REC119172-18011	119172-18011	727
REC119172-18030	119172-18030	727
REC119173-11101	119173-11101	763
REC119173-13501INOX	119173-13501	765
REC119173-18011	119173-18011	726
REC119173-18041	119173-18041	726
REC119173-18940	119173-18940	750
REC119174-01340	119174-01340	744-748
REC119174-13201	119174-13201	750
REC119175-18031	119175-18031	727
REC119181-13500INOX	119181-13500	765
REC119195-18031	119195-18031	726
REC119195-18880	119195-18880	713-715-722
REC119305-35151	119305-35151	710-711-712-713-721
REC119415-01330	119415-01330	743
REC119573-77201	119573-77200	731
REC119573-77201	119573-77201	731
REC119573-77201	129470-77200	731
REC119573-77201	129772-77200	731
REC119574-18020	119574-18020	728
REC119574-42502	119574-42500	735
REC119574-42502	119574-42501	735
REC119574-42502	119574-42502	735
REC119574-42550	119574-42550	754
REC119574-42550	119574-42552	754
REC119574-42550		715
REC119578-18010	119578-18010	728
REC119578-42501	119578-42500	736
REC119578-42501	119578-42501	736
REC119593-11110	119593-11110	763
REC119593-11380	119593-11380	749
REC119593-18880	119593-18880	714-723
REC119593-22351	119593-22351	758
REC119593-35100	119593-35100	715-721-742
REC119593-35400	119593-35400	715-721-742
REC119593-42280E	119593-42280	732
REC119593-42350	119593-42350	715-732
REC119593-49550	119593-49550	734
REC119595-01800	119595-01800	757
REC119595-22300	119595-22300	758
REC119609-32040	119609-32040	755
REC119717-01331	119717-01330	743
REC119717-01331	119717-01331	743
REC119717-02930	119717-02930	761
REC119717-11340	119717-11340	763
REC119717-11350	119717-11350	763
REC119770-00060	119770-00060	749
REC119770-00130	119770-00130	762
REC119770-00250	119770-00250	759
REC119770-00260	119770-00260	761
REC119770-00480	119770-00480	763
REC119770-00490	119770-00490	763
REC119770-00930	119770-00930	745
REC119770-00940	119770-00940	745
REC119770-00950	119770-00950	745
REC119770-01010	119770-01010	761
REC119770-01020	119770-01020	761
REC119770-01030	119770-01030	761
REC119770-01040	119770-01040	761
REC119770-02031	119770-02031	760
REC119770-90090	119770-90090	757
REC119770-90290	119770-90290	757
REC119770-90620	119770-90620	714-721
REC119770-91030	119770-91030	762
REC119771-00040	119771-00040	749
REC119771-00401	119771-00401	745
REC119771-00411	119771-00411	745
REC119771-00421	119771-00421	745
REC119773-18010	119773-18010	728
REC119773-42502	119773-42501	736
REC119773-42502	119773-42502	736
REC119773-42502	119773-42650	736
REC119773-42502	119773-42651	736
REC119773-42502	119773-42652	736
REC119773-42570	119773-42570	737
REC119773-49550	119773-49550	714-734
REC119773-55510	119773-55510	714-716
REC119773-77010	119773-77010	730
REC119773-77201	119773-77200	732
REC119773-77201	119773-77201	732
REC119775-18010	119775-18010	728
REC119775-77260	119773-77250	732
REC119775-77260	119775-77260	732
REC119775-77260		714
REC119802-55810	119802-55810	716
REC119836-77201	119612-77230	731
REC119836-77201	119836-77200	731
REC119836-77201	119836-77201	731
REC119836-77201	129930-77211	731
REC120130-91370	120130-91370	729
REC120324-55760	120324-55760	717
REC120650-55040	120650-55040	714-717
REC121000-01751	121000-01750	752
REC121000-01751	121000-01751	752
REC121000-03071	121000-03070	751
REC121000-03071	121000-03071	751
REC121000-42052	121000-42050	737
REC121000-42052	121000-42051	737
REC121000-42052	121000-42052	737
REC121254-77012	121254-77010	731
REC121254-77012	121254-77011	731
REC121254-77012	121254-77012	731
REC121254-77012	121254-77019	731
REC121254-77012	129429-77010	731
REC121254-77012	129429-77011	731
REC121254-77012	171058-77010	731
REC121370-55601	121370-55601	717
REC121370-55601	124790-55601	717
REC121400-11340	121400-11340	763
REC121450-01801	121450-01801	757
REC121450-02100	121450-02100	760
REC121450-02110	121450-02110	760
REC121450-02160	121450-02160	761
REC121450-02170	121450-02170	759
REC121450-11310	121450-11310	749
REC121450-11681	121450-11680	751
REC121450-11681	121450-11681	751
REC121450-32021	121450-32021	722
REC121450-44411	121450-44410	735
REC121450-44411	121450-44411	735
REC121520-01851	121520-01850	752

REF	OEM	
REC121520-01851	121520-01851	752
REC121575-01334	121575-01331	744
REC121575-01334	121575-01332	744
REC121575-01334	121575-01333	744
REC121575-01334	121575-01334	744
REC121575-01510	121575-01510	753
REC121575-01510	121575-01511	753
REC121575-01510	121575-01512	753
REC121575-01861	121575-01861	751
REC121750-49800	121750-49800	710-711-712-734
REC121750-55701		710-713
REC121850-01800	121850-01800	757
REC121850-11100	121850-11100	763
REC121850-11150	121850-11150	762-763
REC121850-42280E	121850-42280E	713-714-732
REC121850-49811	121850-49811	713-714-734
REC121850-51960	121850-51960	755
REC121857-55710	121857-55710	713-714-716
REC123672-01782	123672-01782	757
REC123672-77370		711
REC123682-48601		712-714
REC124000-01751	124000-01750	752
REC124000-01751	124000-01751	752
REC124060-39452	124060-3945	729
REC124060-39452	124060-39452	729
REC124085-02220	124085-02220	757
REC124160-34845	124160-34844	751
REC124160-34845	124160-34845	751
REC124223-42110	124223-42110	737
REC124240-01883	124240-01882	752
REC124240-01883	124240-01883	752
REC124250-77012	121256-77011	730
REC124250-77012	124250-77012	730
REC124250-77012	124450-77011	730
REC124250-77012	124772-77010	730
REC124250-77012	124772-77020	730
REC124250-77012	129573-77010	730
REC124250-77012	171006-77010	730
REC124250-77012	171008-77010	730
REC124411-01780	124411-01780	757
REC124460-11340	124460-11340	763
REC124550-35110	124085-35113	721
REC124550-35110	124550-35110	721
REC124550-35110		711-712
REC124610-01862	124610-01861	751
REC124610-01862	124610-01862	751
REC124617-91850	124617-91850	733
REC124626-35420		714
REC124722-42290		712
REC124732-42290		710
REC124770-12540	124770-12540	723
REC124950-11340	124950-11340	762
REC126630-42030		714
REC126634-11340		714
REC126650-35220		714
REC126650-35350	126650-35350	721
REC127605-48590	127605-48590	715-734
REC127610-22501	127610-22501	758
REC127610-91350	127610-91350	729
REC127616-11280	127616-11280	762
REC127692-18880	127692-18880	723
REC127695-35150	127695-35150	721
REC127695-35150	127695-35160	721
REC127695-35150		712-713-714
REC127695-55630	127695-55630	714-715-716
REC128170-01331	128170-01330	743
REC128170-01331	128170-01330	748
REC128170-01331	128170-01331	743
REC128170-01510	128170-01510	753
REC128170-01510	128170-01511	753
REC128170-01751	128170-01750	752
REC128170-01751	128170-01751	752
REC128170-03070	128170-03070	751
REC128170-11310	128170-11310	748
REC128170-12540	128170-12540	710-723
REC128170-13201	128170-13201	750
REC128170-32030	128170-32030	722
REC128170-42090	128170-42090	737
REC128170-77010	128170-77010	730
REC128170-77010	128170-77010D	730
REC128170-77350	128170-77350	710-732
REC128171-01911	128171-01330	743
REC128171-01911	128171-01911	743
REC128171-01911	128171-01911	748
REC128171-12540		710
REC128270-11310	128270-11310	748
REC128270-12540	128270-12540	710-711-712-713-723
REC128270-77200	128171-77200	731
REC128270-77200	128270-77200	731
REC128270-77200	128270-77201	731
REC128270-77200	128270-77202	731
REC128271-01911	128271-01911	743-748
REC128275-91340	128275-91340	729
REC128300-13230	128300-13230	726-727-728-750
REC128370-01332	128370-01331	743
REC128370-01332	128370-01331	741-748
REC128370-01332	128370-01332	743
REC128370-13181	128370-13181	750
REC128370-13201	128370-13201	750-764-766
REC128374-01911	128374-01911	743-748
REC128397-42500	121575-42200	735
REC128397-42500	128377-42500	735
REC128397-42500	128397-42500	735
REC128397-42500	128990-42510	735
REC128610-77350		714
REC128619-11100	128619-11100	763
REC128619-11110	128619-11110	763
REC128620-42201		714
REC128625-01342	128625-01342	744
REC128625-23361	128625-23361	761
REC128628-42200		714
REC128628-42203	128628-42203	754
REC128633-35400	128633-35400	714-722
REC128670-77350	128670-77350	711-732
REC128671-01330	128671-01330	743
REC128695-42780		710-713
REC128695-44780		711-712
REC128990-49800	128990-49800	711-712-734
REC128990-77350		712
REC128990-77550	120270-77511	733
REC128990-77550	128990-77550	733
REC128990-77911	128990-77910	733
REC128990-77911	128990-77911	733
REC128991-12500		712
REC128991-42200		712
REC129001-01340	129001-01340	743
REC129001-02931	129001-02931	760
REC129002-01331	128271-01911	743
REC129005-11100	129005-11100	763
REC129005-22500	129005-22500	758
REC129100-01621	129100-01621	753
REC129100-11100	129100-11100	763
REC129100-11112	129100-11112	763
REC129120-11100	129120-11100	763
REC129120-11110	129120-11110	763
REC129120-35121	129120-35121	722
REC129150-01511	129150-01511	753
REC129150-01531	129150-01531	753
REC129150-01881	129150-01881	735-736-737
REC129150-02800	129150-02800	759
REC129150-02931	129150-02931	761
REC129150-12111	129150-12111	749
REC129150-13110	129150-13110	749
REC129150-23601	129150-23601	760
REC129150-35042	129150-35042	722
REC129150-35111	129150-35111	736
REC129150-35150		712-713
REC129150-35151		711
REC129150-35153	129150-35153	722
REC129150-35153	129150-35170	722
REC129150-35153		711-712-713
REC129150-77511	129150-77511	749
REC129158-52101	129158-52101	725
REC129171-01330	129171-01330	744
REC129198-01750	129198-01750	752
REC129271-42502	129271-42500	735
REC129271-42502	129271-42501	735
REC129271-42502	129271-42502	735
REC129271-77950	129271-77950	733
REC129350-49541	129350-49540	735
REC129350-49541	129350-49541	735
REC129400-01751	129400-01751	752
REC129407-01340	129407-01340	744-748
REC129408-01330	129408-01330	744-748
REC129470-01550	129470-01550	755
REC129470-12130	129470-12130	749
REC129470-12330	129470-12330	723
REC129470-12330		711-712-713
REC129470-35040	129470-35040	722
REC129470-35121	129470-35121	722
REC129470-42531		712
REC129470-49801	129470-49801	711-712-713-734
REC129470-55703	129470-55703	711-712-713-716
REC129472-13520	129472-135201	750-764-766
REC129472-18090	129472-18090	726-727-728-750-764-766
REC129473-18000	129473-18000	727
REC129474-18001	129474-18001	728
REC129486-42050	129150-42020	736
REC129486-42050	129486-42050	736
REC129497-18000	129497-18000	727
REC129550-13110	129550-13110	749
REC129553-01350	129553-01350	744
REC129573-01351	129573-1351	744-748
REC129574-55711	129574-55711	712-716
REC129590-22510	129590-22510	758
REC129593-01350		748
REC129601-11310	129601-11310	749
REC129612-42290E	129612-42290E	711-732
REC129670-42513	129670-42500	736
REC129670-42513	129670-42501	736
REC129670-42513	129670-42502	736
REC129670-42513	129670-42512	736
REC129670-42513	129670-42513	736
REC129670-42513	429670-42510	736
REC129670-42513	429670-42511	736
REC129670-42531		712
REC129671-18001	129671-18001	726
REC129673-77680		712
REC129690-02800	129690-02800	759
REC129693-01331	129693-01331	744-748
REC129693-18001	129693-18000	728
REC129693-18001	129693-18001	728
REC129698-77010	121370-77010	730
REC129698-77010	129242-77010	730
REC129698-77010	129608-77010	730
REC129698-77010	129698-77010	730
REC129792-13552INOX	129579-13551	764
REC129792-13552INOX	129671-13551	764
REC129792-13552INOX	129792-13550	764
REC129792-13552INOX	129792-13551	764
REC129792-13552INOX	129792-13552	764
REC129795-01800	129795-01800	757
REC129795-49551	129795-49551	735
REC129940-42310E	129940-42310E	711-732
REC13554-0001	10-24493-01	714-736
REC13554-0001	119773-42600	754
REC13554-0001	119773-42601	754
REC1411-0001	128176-42080	753
REC145640-48410	145640-48410	714-734
REC160ELEMENT		720
REC165000-69590		714
REC165000-69950	165000-69950	735
REC1766160		720
REC196350-02350	196350-02350	768
REC196350-02350AL	196350-02350	768
REC196350-02550	196350-02550	768
REC196350-02550AL	196350-02550	768
REC196350-02570	196350-02570	768
REC196350-02570AL	196350-02570	768
REC196350-09910	196350-09910	767
REC196350-09910AL	196350-09910	767
REC196440-02690	196440-02690	768
REC196440-02690AL	196440-02690	768
REC196450-02501	196440-02660	768
REC196450-02501	196450-02501	768
REC196450-02501AL	196440-02660	768
REC196450-02501AL	196450-02501	768
REC196630-02670	196630-02670	767
REC196630-02670AL	196630-02670	767
REC196640-02680	196640-62680	768
REC196640-02680AL	196640-62680	768
REC21213660		735
REC21213660	129470-42352	754
REC21213660	129470-42530	754
REC21213660	129670-42530	754
REC21213660	129670-42531	754
REC21213660		711-712-713-736-754
REC22190-060002	22190-060002	756
REC22190-080002	22190-080002	756
REC22190-100002	22190-100002	756
REC22190-120002	22190-120002	756
REC22190-140002	22190-140002	756
REC22190-240002	22190-240002	756
REC22779-0001	124223-42091	754
REC22779-0001	124223-42092	754
REC22779-0001	128296-42070	754
REC22779-0001	128620-42200	754
REC22779-0001		710-711-712
REC23414-080000	23414-080000	756
REC23414-100000	23414-100000	756
REC23414-120000	23414-120000	756
REC23414-250000	23414-250000	756
REC24311-000100	24311-000100	755
REC24311-000120	24311-000120	755
REC24311-000160	24311-000160	755
REC24311-000320	24311-000320	755
REC24311-000700	24311-000700	755
REC24321-000350	24321-000350	755
REC24321-000350	24325-000350	755
REC24341-000240	24341-000240	755
REC24341-000600	24341-000600	737
REC25132-002700	25132-002700	732
REC25132-003000	25132-003000	710-713-732
REC25132-003100	25132-003100	710-732
REC25132-003700	25132-003700	710-711-732
REC25132-004250E	25132-004250	714-732
REC25132-004500	25132-004500	711-712-713-732
REC25132-004600	25132-004600	732
REC25132-004600	25132-004600	712-713-732
REC25152-004300	25152-004300	713-732
REC2656613		720
REC27200-400400	27200-400400	767
REC27210-01302		767
REC27210-01302AL		767
REC27210-200200	27210-200200	767
REC27210-200300	27210-200300	767
REC27210-200370	27210-200370	767
REC27210-200550	177301-549000	767
REC27210-200550	27210-200550	767
REC27210-300400	27200-300400	767
REC296TWIN		720
REC2GMWC	121450-11681	740
REC2GMWC	123682-44201	740
REC2GMWC	128290-13251	740
REC2GMWC	128695-44070	740
REC2GMWC	24311-000160	740
REC2GMWC	24311-000700	740
REC2GMWC		739
REC3581078		720
REC3581760	3581760	718-720
REC3586494	104211-42070	753
REC3586494	104211-42071	753
REC3586494		710-711-713
REC3841697	120650-42310	754

REF	OEM	
REC3841697	127610-42200	754
REC3841697		713-714
REC3GMWC	121450-13251	740
REC3GMWC	123682-44201	740
REC3GMWC	128297-44030	740
REC3GMWC	128390-44491	740
REC3GMWC	128695-44070	740
REC3GMWC	24311-000160	740
REC3GMWC	24311-000700	740
REC3GMWC		739
REC3JHWC	120322-33050	741
REC3JHWC	120445-44611	741
REC3JHWC	129150-13110	741
REC3JHWC	129670-44150	741
REC3JHWC	24321-000750	741
REC3JHWC		739
REC3YMWC	119717-13110	741
REC3YMWC	128990-44100	741
REC3YMWC		739
REC41650-501140	41650-501140	714-717
REC41650-502320	41650-502320	712-713-714-717
REC41650-502330	41650-502330	712-714-715-717
REC43400-500450	43400-500450	756
REC47-809866T		715
REC4JHIC	129573-18120	738
REC4JHIC	129672-18170	738
REC4JHOC	120322-33050	742
REC4JHOC	129673-33050	742
REC4JHOC	24321-000750	742
REC4JHOC	24321-000800	742
REC4JHOC		741
REC4JHWC	120322-33050	741
REC4JHWC	120445-44611	741
REC4JHWC	127677-33060	741
REC4JHWC	129550-13110	741
REC4JHWC	129573-44470	741
REC4JHWC	129672-44150	741
REC4JHWC	129693-44420	741
REC4JHWC	24321-000750	741
REC4JHWC	24321-000800	741
REC4JHWC	24321-001000	741
REC4JHWC		739
REC4LHIC	119175-18590	738
REC4LHIC	119773-18350	738
REC4LHIC		738
REC4LHOC	119175-33350	742
REC4LHOC	119175-33370	742
REC4LHOC	119175-33380	742
REC4LHOC	24311-000180	742
REC4LHOC	24311-000900	742
REC4LHOC		741
REC4LHWC	119171-44470	741
REC4LHWC	119174-44470	741
REC4LHWC	119175-33350	741
REC4LHWC	119175-33370	741
REC4LHWC	119175-33380	741
REC4LHWC	24311-000300	741
REC4LHWC	24311-001000	741
REC4LHWC	24311-001200	741
REC4LHWC		740
REC500MA	22677639	720
REC500MA	35-850481	720
REC500MA	35-850481A1	720
REC500MACON		725
REC653-0001	10-1333701	735
REC653-0001	10-24509-01	735
REC653-0001	128990-42200	754
REC653-0001	128990-42570	754
REC653-0001		710-711-712-735
REC6LPIC	119773-18121	738
REC6LPIC	119773-18350	738
REC6LPOC	119175-33350	742
REC6LPOC	119175-33370	742
REC6LPOC	119773-33070	742
REC6LPWC	119773-44071	741
REC6LPWC	119773-44080	741
REC6LPWC		740
REC6LYIC	119578-18420	738
REC6LYIC	119595-18600	738
REC6LYIC	127677-33060	738
REC6LYIC	23414-080000	738
REC6LYOC	119574-33150	742
REC6LYOC	119574-66160	742
REC6LYOC	119578-33080	742
REC6LYOC	119578-33121	742
REC6LYOC	119578-33130	742
REC6LYOC	119578-34020	742
REC6LYOC	22190-100002	742
REC6LYOC	24321-001500	742
REC6LYWC	119175-33350	741
REC6LYWC	119574-44170	741
REC6LYWC	119578-44350	741
REC6LYWC	119578-44420	741
REC6LYWC	119578-44430	741
REC6LYWC	24311-000400	741
REC6LYWC		740
REC704571-22500	704571-22500	758
REC705311-23600	705311-23600	760
REC70720		725
REC719000-02800	719000-02800	759
REC719000-02930	719000-02930	762
REC719000-22501	719000-22501	758
REC719171-92602	719171-92602	744-747
REC719173-92600	719173-92600	744-747
REC719174-23601	719174-23601	761
REC719593-02590	719593-02590	762
REC719593-23601	719593-23601	761
REC719595-23600	719595-23600	761
REC719717-02901	719717-02901	759
REC721000-22500	72100-22500	758
REC721575-22500	705311-22500	758
REC721575-22500	721575-22500	758
REC728170-92600	728170-92600	743-745
REC728171-92601	728171-92601	743-745
REC728171-92601	728176-92600	745
REC728171-92601	728176-92601	745
REC728270-42002	128270-42000	736
REC728270-42002	128270-42001	736
REC728270-42002	128270-42002	736
REC728271-92605	728271-92605	743-746
REC728370-92605	728370-92605	743
REC728374-92605	728374-92605	743-746
REC728633-22500	728633-22500	758
REC728790-92600	728790-92600	743-745
REC728990-92600	728990-92600	743-746
REC729120-22500	729120-22500	758
REC729171-92600	729171-92600	744-746
REC729270-92601	729270-92601	743-746
REC729271-92600	729271-92600	743-746
REC729407-92605		744
REC729408-92605	729408-92600	746
REC729408-92605	729408-92605	746
REC729408-92605		744
REC729470-92605	729470-92605	744-747
REC729573-92605	729573-92605	746-747
REC729670-92600	729670-92600	742-747
REC729693-92600	729693-92600	744-746
REC876614	129171-67200	733
REC889419	889419	718
REC889422	889422	718
REC930122	930122	747
RECGS00530		720
RECGS01030		720
RECKITYZT350-ZT370AL		768
RECKITYZT350-ZT370M		768
RECKITYZT350-ZT370ZN		768
RECRK21069		725
RECSD20	196313-02591	772
RECSD20	24321-000950	772
RECSD20	24341-000125	772
RECSD25	196313-02591	772
RECSD25	196420-12240	772
RECSD25	24341-000125	772
RECSD25		773
RECSD40	196440-02871	772
RECSD40	24321-000950	772
RECSD40	24341-000125	772
RECSD40		773
RECSWK-2000/10		720
RECSWK-2000/5		720
RECX02173476	X02173476	737
RECX02173476	X0506597	737
RECXN199611	XN199611	713-714-723
S		
SED3092500	119773-13500	765
SED3092500	119773-13501	765
SOL1651-138-28	196350-09780	775
SOL1651-140-24	196350-09740	775
SOL1651-140-25		775
SOL1651-140-26	196350-09760	775
SOL1651-140-27		775
SOL1651-143-22	196350-09720	775
SOL1651-143-23		775
SOL1651-144-20	196350-09400	775
SOL1651-144-21		775
SOL1654-150-28	196350-09480	775
SOL1654-155-24	196350-09440	775
SOL1654-155-25		775
SOL1654-155-26	196350-09460	775
SOL1654-155-27		775
SOL1654-158-22	196350-09420	775
SOL1654-158-23		775
SOL1654-160-20	196350-09400	775
SOL1654-160-21		775
SOL8712-143-21		774
SOL8712-148-17		774
SOL8712-150-15		774
SOL8812-142-23		774
SOL8812-143-21		774
SOL8812-145-19		774
SOL8812-148-17		774
SOL8812-150-15		774
SOL8812-153-19		774
SOL8812-153-21		774
SOL8812-155-17		774
SOL8812-158-15		774
T		
TEN01300	104211-41300	769
TEN01301	27210-200300	714-769
TEN01302		769
TEN01303	27210-200200	710-714-740-769
TEN01304	196630-02670	769
TEN01305	196420-02640	772
TEN01305	196420-02652	773
TEN01305/1	126450-02501	773
TEN01305/1	126450-02600	773
TEN01305/1	196440-02660	770
TEN01305/1	196450-02501	770
TEN01306	177301-549000	769
TEN01306	27210-200550	769
TEN01308	104211-41300	769
TEN01310	27200-400400	769
TEN01311	27200-300400	714-769
TEN01312	27210-200370	714-769
TEN01316	27210-200370	713-715-770
TEN01316T	119574-44150	770
TEN01316TP		770
TEN01317	177301-54900	713-714-770
TEN01317T	119574-18790	714-715-738-770
TEN01317TP		770
TEN01318	27210-200370	770
TEN01318T	119574-44150	740-741-742-770
TEN01318TP		770
TEN01319	196640-62680	770
TEN01390-1	196350-02550	770
TEN01391-1	196350-02570	770
TEN01392-1	196350-09910	770
TEN01393-1	196350-07360	769
TEN01394-1	196350-02350	770
TENKITYANMARSTD		770
TENPLAC-1	196440-02690	770-773
TRI305-0386		724
TRI305-0566		724
Y		
YANMAR1GMSERIES		748
YANMAR2GMSERIES		748
YANMAR3GMSERIES		748
YANMAR4JHSERIES		748
YANMAR4LHSERIES		748

OEM --> REF

OEM	REF	
889419	REC889419	718
889422	REC889422	718
930122	REC930122	747
3581760	REC3581760	718
22677639	REC500MA	720
10-1286-01	CEF500162G	715-736
10-13170-01	REC119574-42502	735
10-13328-03	REC21213660	735
10-1333701	REC653-0001	735
10-24493-01	REC13554-0001	714-736
10-24509-01	REC653-0001	735
104070-13520	MAR3520	764
104211-11100	REC104211-11100	763
104211-11110	REC104211-11110	763
104211-41300	CMC10421141-300	771
104211-41300	REC104211-41300	767
104211-41300	REC104211-41300	767
104211-41300	REC104211-41300AL	767
104211-41300	REC104211-41300AL	767
104211-41300	TEN01300	769
104211-41300	TEN01308	769
104211-42070	REC3586494	753
104211-42071	REC3586494	753
104211-42090	REC104211-42090	737-752
104211-49160	REC104211-49160	735
104211-77010	REC104211-77011	731
104211-77011	REC104211-77011	731
104214-13521	MAR3520	764
104214-13531	MAR3520	764
104500-55710	REC104500-55710	710-711-712-717
104511-11100	REC104511-11100	763
104511-78780E	REC104511-78780E	710-711-712-737
105225-02020	REC105225-02020	755
105225-02040	REC105225-02040	753
105225-11100	REC105225-11100	763
105225-11110	REC105225-11110	763
105582-49200	REC105582-49200	734
105582-52010	REC105582-52010	725
105582-82041	REC105582-82041	753
109005-35170	REC119005-35100	721
114361-77011	REC114362-77011	730
114362-77010	REC114362-77011	730
114362-77011	REC114362-77011	730
114399-77010	REC114362-77011	730
119000-01771	REC119000-01771	751
119000-32020	REC119000-32020	722
119000-42021	REC119000-42021	736
119005-35100	REC119005-35100	721
119005-35151	REC119005-35100	721
119100-11360	REC119100-11360	749
119100-12113	REC119100-12113	749
119171-11110	REC119171-11110	763
119171-11150	REC119171-11150	763
119171-13490	MAR119171-13490INOX	765
119171-13510	REC119171-13510	750-765
119171-13530	MAR119171-13530INOX	765
119171-18010	REC119171-18010	726
119171-44470	REC4LHWC	741
119172-18011	REC119172-18011	727
119172-18030	REC119172-18030	727
119173-11101	REC119173-11101	763
119173-13501	REC119173-13501INOX	765
119173-18011	REC119173-18011	726
119173-18041	REC119173-18041	726
119173-18940	REC119173-18940	750
119174-01340	REC119174-01340	744-748
119174-13201	REC119174-13201	750
119174-13501	MAR119174-13501INOX	765
119174-44470	REC4LHWC	741
119175-18031	REC119175-18031	727
119175-18590	REC4LHIC	738
119175-33350	REC4LHOC	742
119175-33350	REC4LHWC	741
119175-33350	REC6LPOC	742
119175-33350	REC6LYWC	741
119175-33370	REC4LHOC	742
119175-33370	REC4LHWC	741
119175-33370	REC6LPOC	742
119175-33380	REC4LHOC	742
119175-33380	REC4LHWC	741
119181-13500	REC119181-13500INOX	765
119195-18031	REC119195-18031	726
119195-18880	REC119195-18880	713-715-722
119305-35151	REC119305-35151	710-711-712-713-721
119415-01330	REC119415-01330	743
119573-77200	REC119573-77201	731
119573-77201	REC119573-77201	731
119574-13530	MAR119574-13530INOX	766
119574-18020	REC119574-18020	728
119574-18790	TEN01317T	714-715-738-770
119574-33150	REC6LYOC	742
119574-42500	REC119574-42502	735
119574-42501	REC119574-42502	735
119574-42502	REC119574-42502	735
119574-42550	CEF500162G	754
119574-42550	REC119574-42550	754
119574-42552	CEF500162G	754
119574-42552	REC119574-42550	754
119574-44150	TEN01316T	770
119574-44150	TEN01318T	740-741-742-770
119574-44170	REC6LYWC	741
119574-66160	REC6LYOC	742
119578-18010	REC119578-18010	728
119578-18420	REC6LYIC	738
119578-33080	REC6LYOC	742
119578-33121	REC6LYOC	742
119578-33130	REC6LYOC	742
119578-34020	REC6LYOC	742
119578-42500	REC119578-42501	736
119578-42501	REC119578-42501	736
119578-44350	REC6LYWC	741
119578-44420	REC6LYWC	741
119578-44430	REC6LYWC	741
119588-13501	MAR119588-13501INOX	766
119593-11110	REC119593-11110	763
119593-11380	REC119593-11380	749
119593-18880	REC119593-18880	714-723
119593-22351	REC119593-22351	758
119593-35100	REC119593-35100	715-721-742
119593-35400	REC119593-35400	715-721-742
119593-42200	CEF500161	754
119593-42201	CEF500161	754
119593-42280	REC119593-42280E	732
119593-42350	REC119593-42350	715-732
119593-49550	REC119593-49550	734
119595-01800	REC119595-01800	757
119595-18600	REC6LYIC	738
119595-22300	REC119595-22300	758
119609-32040	REC119609-32040	755
119612-77230	REC119836-77201	731
119717-01330	REC119717-01331	743
119717-01331	REC119717-01331	743
119717-02930	REC119717-02930	761
119717-11340	REC119717-11340	763
119717-11350	REC119717-11350	763
119717-13110	REC3YMWC	741
119770-00060	REC119770-00060	749
119770-00130	REC119770-00130	762
119770-00250	REC119770-00250	759
119770-00260	REC119770-00260	761
119770-00480	REC119770-00480	763
119770-00490	REC119770-00490	763
119770-00930	REC119770-00930	745
119770-00940	REC119770-00940	745
119770-00950	REC119770-00950	745
119770-01010	REC119770-01010	761
119770-01020	REC119770-01020	761
119770-01030	REC119770-01030	761
119770-01040	REC119770-01040	761
119770-02031	REC119770-02031	760
119770-90090	REC119770-90090	757
119770-90290	REC119770-90290	757
119770-90620	REC119770-90620	714-721
119770-91030	REC119770-91030	762
119771-00040	REC119771-00040	749
119771-00401	REC119771-00401	745
119771-00411	REC119771-00411	745
119771-00421	REC119771-00421	745
119773-13500	MAR119773-13501INOX	765
119773-13500	SED3092500	765
119773-13501	MAR119773-13501INOX	765
119773-13501	SED3092500	765
119773-18010	REC119773-18010	728
119773-18121	REC6LPIC	738
119773-18350	REC4LHIC	738
119773-18350	REC6LPIC	738
119773-33070	REC6LPOC	742
119773-42501	REC119773-42502	736
119773-42502	REC119773-42502	736
119773-42570	REC119773-42570	737
119773-42600	REC13554-0001	754
119773-42601	REC13554-0001	754
119773-42650	REC119773-42502	736
119773-42651	REC119773-42502	736
119773-42652	REC119773-42502	736
119773-44071	REC6LPWC	741
119773-44080	REC6LPWC	741
119773-49550	REC119773-49550	714-734
119773-55510	REC119773-55510	714-716
119773-77010	REC119773-77010	730
119773-77200	REC119773-77201	732
119773-77201	REC119773-77201	732
119773-77250	REC119775-77260	732
119775-18010	REC119775-18010	728
119775-77260	REC119775-77260	732
119802-55810	REC119802-55810	716
119836-77200	REC119836-77201	731
119836-77201	REC119836-77201	731
120130-91370	REC120130-91370	729
120270-77511	REC128990-77550	733
120322-33050	REC3JHWC	741
120322-33050	REC4JHOC	742
120322-33050	REC4JHWC	741
120324-55760	REC120324-55760	717
120445-44611	REC3JHWC	741
120445-44611	REC4JHWC	741
120650-42310	REC3841697	754
120650-55040	REC120650-55040	714-717
121000-01750	REC121000-01751	752
121000-01751	REC121000-01751	752
121000-03070	REC121000-03071	751
121000-03071	REC121000-03071	751
121000-42050	REC121000-42052	737
121000-42051	REC121000-42052	737
121000-42052	REC121000-42052	737
121254-77010	REC121254-77012	731
121254-77011	REC121254-77012	731
121254-77012	REC121254-77012	731
121254-77019	REC121254-77012	731
121256-77011	REC124250-77012	730
121370-08351	GS38121	771
121370-55601	REC121370-55601	717
121370-77010	REC129698-77010	730
121400-11340	REC121400-11340	763
121450-01801	REC121450-01801	757
121450-02100	REC121450-02100	760
121450-02110	REC121450-02110	760
121450-02160	REC121450-02160	761
121450-02170	REC121450-02170	759
121450-11310	REC121450-11310	749
121450-11680	REC121450-11681	751
121450-11681	REC121450-11681	751
121450-11681	REC2GMWC	740
121450-13251	REC3GMWC	740
121450-32021	REC121450-32021	722
121450-44410	REC121450-44411	735
121450-44411	REC121450-44411	735
121520-01850	REC121520-01851	752
121520-01851	REC121520-01851	752
121575-01331	REC121575-01334	744
121575-01332	REC121575-01334	744
121575-01333	REC121575-01334	744
121575-01334	REC121575-01334	744
121575-01510	REC121575-01510	753
121575-01511	REC121575-01510	753
121575-01512	REC121575-01510	753
121575-01861	REC121575-01861	751
121575-42200	REC128397-42500	735
121750-49800	REC121750-49800	710-711-712-734
121850-01800	REC121850-01800	757
121850-11100	REC121850-11100	763
121850-11150	REC121850-11150	762-763
121850-42280E	REC121850-42280E	713-714-732
121850-49811	REC121850-49811	713-714-734
121850-51960	REC121850-51960	755
121857-55710	REC121857-55710	713-714-716
123672-01782	REC123672-01782	757
123682-44201	REC2GMWC	740
123682-44201	REC3GMWC	740
124000-01750	REC124000-01751	752
124000-01751	REC124000-01751	752
124060-3945	REC124060-39452	729
124060-39452	REC124060-39452	729
124085-02220	REC124085-02220	757
124085-35113	REC124550-35110	721
124160-34844	REC124160-34845	751
124160-34845	REC124160-34845	751
124223-42091	REC22779-0001	754
124223-42092	REC22779-0001	754
124223-42110	REC124223-42110	737
124223-49250	REC105582-49200	734
124240-01882	REC124240-01883	752
124240-01883	REC124240-01883	752
124250-77012	REC124250-77012	730
124411-01780	REC124411-01780	757
124450-77011	REC124250-77012	730

OEM	REF	
124460-11340	REC124460-11340	763
124550-35110	REC124550-35110	721
124610-01861	REC124610-01862	751
124610-01862	REC124610-01862	751
124617-91850	REC124617-91850	733
124770-12540	GS38120	771
124770-12540	REC124770-12540	723
124772-08341	GS38108	771
124772-77010	REC124250-77012	730
124772-77020	REC124250-77012	730
124790-55601	REC121370-55601	717
124950-11340	REC124950-11340	762
126450-02501	TEN01305/1	773
126450-02600	TEN01305/1	773
126650-35350	REC126650-35350	721
127070-13520	MAR3520	764
127605-48590	REC127605-48590	715-734
127610-22501	REC127610-22501	758
127610-42200	REC3841697	754
127610-91350	REC127610-91350	729
127616-11280	REC127616-11280	762
127677-33060	REC4JHWC	741
127677-33060	REC6LYIC	738
127692-18880	REC127692-18880	723
127695-35150	REC127695-35150	721
127695-35160	REC127695-35150	721
127695-55630	REC127695-55630	714-715-716
128170-01330	REC128170-01331	743
128170-01330	REC128170-01331	748
128170-01331	REC128170-01331	743
128170-01510	REC128170-01510	753
128170-01511	REC128170-01510	753
128170-01750	REC128170-01751	752
128170-01751	REC128170-01751	752
128170-03070	REC128170-03070	751
128170-11310	REC128170-11310	748
128170-12540	REC128170-12540	710-723
128170-13201	REC128170-13201	750
128170-32030	REC128170-32030	722
128170-42090	REC128170-42090	737
128170-77010	REC128170-77010	730
128170-77010D	REC128170-77010	730
128170-77350	REC128170-77350	710-732
128171-01330	REC128171-01911	743
128171-01911	REC128171-01911	743
128171-01911	REC128171-01911	748
128171-77200	REC128270-77200	731
128176-42080	REC1411-0001	753
128270-08341	GS38107	771
128270-11310	REC128270-11310	748
128270-12540	REC128270-12540	710-711-712-713-723
128270-42000	REC728270-42002	736
128270-42001	REC728270-42002	736
128270-42002	REC728270-42002	736
128270-77200	REC128270-77200	731
128270-77201	REC128270-77200	731
128270-77202	REC128270-77200	731
128271-01911	REC128271-01911	743-748
128271-01911	REC129002-01331	743
128275-91340	REC128275-91340	729
128290-13251	REC2GMWC	740
128296-42070	REC22779-0001	754
128297-44030	REC3GMWC	740
128300-13230	REC128300-13230	726-727-728-750
128370-01331	REC128370-01332	743
128370-01331	REC128370-01332	741-748
128370-01332	REC128370-01332	743
128370-13181	REC128370-13181	750
128370-13201	REC128370-13201	750-764-766
128370-13550	MAR128370-13550INOX	766
128370-13600	MAR3520	764
128374-01911	REC128374-01911	743-748
128377-42500	REC128397-42500	735
128390-44491	REC3GMWC	740
128397-42500	REC128397-42500	735
128619-11100	REC128619-11100	763
128619-11110	REC128619-11110	763
128620-42200	REC22779-0001	754
128625-01342	REC128625-01342	744
128625-23361	REC128625-23361	761
128628-42203	REC128628-42203	754
128633-35400	REC128633-35400	714-722
128670-77350	REC128670-77350	711-732
128671-01330	REC128671-01330	743
128695-44070	REC2GMWC	740
128695-44070	REC3GMWC	740
128890-13530	MAR128890-13530INOX	766
128990-13520	MAR3520	764

OEM	REF	
128990-42200	REC653-0001	754
128990-42510	REC128397-42500	735
128990-42570	REC653-0001	754
128990-44100	REC3YMWC	741
128990-49800	REC128990-49800	711-712-734
128990-77550	REC128990-77550	733
128990-77910	REC128990-77911	733
128990-77911	REC128990-77911	733
129001-01340	REC129001-01340	743
129001-02931	REC129001-02931	760
129005-11100	REC129005-11100	763
129005-22500	REC129005-22500	758
129100-01621	REC129100-01621	753
129100-11100	REC129100-11100	763
129100-11112	REC129100-11112	763
129120-11100	REC129120-11100	763
129120-11110	REC129120-11110	763
129120-35121	REC129120-35121	722
129150-01511	REC129150-01511	753
129150-01531	REC129150-01531	753
129150-01881	REC129150-01881	735-736-737
129150-02800	REC129150-02800	759
129150-02931	REC129150-02931	761
129150-12111	REC129150-12111	749
129150-13110	REC129150-13110	749
129150-13110	REC3JHWC	741
129150-23601	REC129150-23601	760
129150-35042	REC129150-35042	722
129150-35111	REC129150-35111	736
129150-35153	REC129150-35153	722
129150-35170	REC129150-35153	722
129150-42020	REC129486-42050	736
129150-77511	REC129150-77511	749
129158-52101	REC129158-52101	725
129171-01330	REC129171-01330	744
129171-67200	REC876614	733
129198-01750	REC129198-01750	752
129242-77010	REC129698-77010	730
129271-42500	REC129271-42502	735
129271-42501	REC129271-42502	735
129271-42502	REC129271-42502	735
129271-77950	REC129271-77950	733
129350-49540	REC129350-49541	735
129350-49541	REC129350-49541	735
129400-01751	REC129400-01751	752
129407-01340	REC129407-01340	744-748
129408-01330	REC129408-01330	744-748
129429-77010	REC121254-77012	731
129429-77011	REC121254-77012	731
129470-01550	REC129470-01550	755
129470-12130	REC129470-12130	749
129470-12330	REC129470-12330	723
129470-13550	MAR129470-13550INOX	766
129470-13560	MAR13561	764
129470-13561	MAR13561	764
129470-35040	REC129470-35040	722
129470-35121	REC129470-35121	722
129470-42352	REC21213660	754
129470-42530	REC21213660	754
129470-49801	REC129470-49801	711-712-713-734
129470-55703	REC129470-55703	711-712-713-716
129470-77200	REC119573-77201	731
129472-135201	REC129472-13520	750-764-766
129472-18090	REC129472-18090	726-727-728-750-764-766
129473-18000	REC129473-18000	727
129474-18001	REC129474-18001	728
129486-42050	REC129486-42050	736
129497-18000	REC129497-18000	727
129550-13110	REC129550-13110	749
129550-13110	REC4JHWC	741
129553-01350	REC129553-01350	744
129573-1351	REC129573-01351	744-748
129573-18120	REC4JHIC	738
129573-44470	REC4JHWC	741
129573-77010	REC124250-77012	730
129574-55711	REC129574-55711	712-716
129579-13551	REC129792-13552INOX	764
129590-22510	REC129590-22510	758
129601-11310	REC129601-11310	749
129608-77010	REC129698-77010	730
129612-42290E	REC129612-42290E	711-732
129670-13560	MAR13561	764
129670-13561	MAR13561	764
129670-42500	REC129670-42513	736
129670-42501	REC129670-42513	736
129670-42502	REC129670-42513	736
129670-42512	REC129670-42513	736

OEM	REF	
129670-42513	REC129670-42513	736
129670-42530	REC21213660	754
129670-42531	REC21213660	754
129670-44150	REC3JHWC	741
129671-13551	REC129792-13552INOX	764
129671-13552	MAR129671-13552INOX	766
129671-18001	REC129671-18001	726
129672-18170	REC4JHIC	738
129672-44150	REC4JHWC	741
129673-33050	REC4JHOC	742
129690-02800	REC129690-02800	759
129693-01331	REC129693-01331	744-748
129693-18000	REC129693-18001	728
129693-18001	REC129693-18001	728
129693-44420	REC4JHWC	741
129698-77010	REC129698-77010	730
129772-77200	REC119573-77201	731
129792-13550	REC129792-13552INOX	764
129792-13551	REC129792-13552INOX	764
129792-13552	REC129792-13552INOX	764
129795-01800	REC129795-01800	757
129795-49551	REC129795-49551	735
129930-77211	REC119836-77201	731
129940-42310E	REC129940-42310E	732
145640-48410	REC145640-48410	714-734
165000-69950	REC165000-69950	735
171006-77010	REC124250-77012	730
171008-77010	REC124250-77012	730
171058-77010	REC121254-77012	731
177301-54900	TEN01317	713-714-770
177301-549000	REC27210-200550	767
177301-549000	TEN01306	769
181130-49200	REC105582-49200	734
196313-02591	RECSD20	772
196313-02591	RECSD25	772
196350-02350	REC196350-02350	768
196350-02350	REC196350-02350AL	768
196350-02350	TEN01394-1	770
196350-02550	REC196350-02550	768
196350-02550	REC196350-02550AL	768
196350-02550	TEN01390-1	770
196350-02570	REC196350-02570	768
196350-02570	REC196350-02570AL	768
196350-02570	TEN01391-1	770
196350-07360	TEN01393-1	769
196350-09400	SOL1651-144-20	775
196350-09400	SOL1654-160-20	775
196350-09420	SOL1654-158-22	775
196350-09440	SOL1654-155-24	775
196350-09460	SOL1654-155-26	775
196350-09480	SOL1654-150-28	775
196350-09720	SOL1651-143-22	775
196350-09740	SOL1651-140-24	775
196350-09760	SOL1651-140-26	775
196350-09780	SOL1651-138-28	775
196350-09910	REC196350-09910	767
196350-09910	REC196350-09910AL	767
196350-09910	TEN01392-1	770
196420-02640	TEN01305	772
196420-02652	CM19642002652A	771
196420-02652	CM19642002652Z	771
196420-02652	TEN01305	773
196420-12240	RECSD25	772
196440-02660	CM19644002660KITA	771
196440-02660	CM19644002660KITZ	771
196440-02660	REC196450-02501	768
196440-02660	REC196450-02501AL	768
196440-02660	TEN01305/1	770
196440-02690	REC196440-02690	768
196440-02690	REC196440-02690AL	768
196440-02690	TENPLAC-1	770-773
196440-02871	RECSD40	772
196450-02492	CM19642002652A	771
196450-02492	CM19642002652Z	771
196450-02501	CM19644002660KITA	771
196450-02501	CM19644002660KITZ	771
196450-02501	REC196450-02501	768
196450-02501	REC196450-02501AL	768
196450-02501	TEN01305/1	770
196630-02670	REC196630-02670	767
196630-02670	REC196630-02670AL	767
196630-02670	TEN01304	769
196640-62680	REC196640-02680	768
196640-62680	REC196640-02680AL	768
196640-62680	TEN01319	770
22190-060002	REC22190-060002	756
22190-080002	REC22190-080002	756
22190-100002	REC22190-100002	756
22190-100002	REC6LYOC	742
22190-120002	REC22190-120002	756
22190-140002	REC22190-140002	756
22190-240002	REC22190-240002	756

OEM	REF	
23414-080000	**REC23414-080000**	756
23414-080000	**REC6LYIC**	738
23414-100000	**REC23414-100000**	756
23414-120000	**REC23414-120000**	756
23414-250000	**REC23414-250000**	756
24311-000100	**REC24311-000100**	755
24311-000120	**REC24311-000120**	755
24311-000160	**REC24311-000160**	755
24311-000160	**REC2GMWC**	740
24311-000160	**REC3GMWC**	740
24311-000180	**REC4LHOC**	742
24311-000300	**REC4LHWC**	741
24311-000320	**REC24311-000320**	755
24311-000400	**REC6LYWC**	741
24311-000700	**REC24311-000700**	755
24311-000700	**REC2GMWC**	740
24311-000700	**REC3GMWC**	740
24311-000900	**REC4LHOC**	742
24311-001000	**REC4LHWC**	741
24311-001200	**REC4LHWC**	741
24321-000350	**REC24321-000350**	755
24321-000750	**REC3JHWC**	741
24321-000750	**REC4JHOC**	742
24321-000750	**REC4JHWC**	741
24321-000800	**REC4JHOC**	742
24321-000800	**REC4JHWC**	741
24321-000950	**RECSD20**	772
24321-000950	**RECSD40**	772
24321-001000	**REC4JHWC**	741
24321-001500	**REC6LYOC**	742
24325-000350	**REC24321-000350**	755
24341-000125	**RECSD20**	772
24341-000125	**RECSD25**	772
24341-000125	**RECSD40**	772
24341-000240	**REC24341-000240**	755
24341-000600	**REC24341-000600**	737
25132-002700	**REC25132-002700**	732
25132-003000	**REC25132-003000**	710-713-732
25132-003100	**REC25132-003100**	710-732
25132-003700	**REC25132-003700**	710-711-732
25132-004250	**REC25132-004250E**	714-732
25132-004500	**REC25132-004500**	711-712-713-732
25132-004600	**REC25132-004600**	732
25132-004600	**REC25132-004600**	712-713-732
25152-004300	**REC25152-004300**	713-732
27200-300400	**REC27210-300400**	767
27200-300400	**TEN01311**	714-769
27200-400400	**REC27200-400400**	767
27200-400400	**TEN01310**	769
27210-200200	**REC27210-200200**	767
27210-200200	**TEN01303**	710-714-740-769
27210-200300	**CMC272100-20030**	710-711-712-713-715-771
27210-200300	**REC27210-200300**	767
27210-200300	**TEN01301**	714-769
27210-200370	**REC27210-200370**	767
27210-200370	**TEN01312**	714-769
27210-200370	**TEN01316**	713-715-770
27210-200370	**TEN01318**	770
27210-200550	**REC27210-200550**	767
27210-200550	**TEN01306**	769
35-850481	**REC500MA**	720
35-850481A1	**REC500MA**	720
41650-501140	**REC41650-501140**	714-717
41650-502320	**REC41650-502320**	713-714-717
41650-502330	**REC41650-502330**	714-715-717
429670-42510	**REC129670-42513**	736
429670-42511	**REC129670-42513**	736
43400-500450	**REC43400-500450**	756
704571-22500	**REC704571-22500**	758
705311-22500	**REC721575-22500**	758
705311-23600	**REC705311-23600**	760
719000-02800	**REC719000-02800**	759
719000-02930	**REC719000-02930**	762
719000-22501	**REC719000-22501**	758
719171-92602	**REC719171-92602**	744-747
719173-92600	**REC719173-92600**	744-747
719174-23601	**REC719174-23601**	761
719593-02590	**REC719593-02590**	762
719593-23601	**REC719593-23601**	761
719595-23600	**REC719595-23600**	761
719717-02901	**REC719717-02901**	759
72100-22500	**REC721000-22500**	758
721575-22500	**REC721575-22500**	758

OEM	REF	
724770-13200	**MAR13200**	764
728170-92600	**REC728170-92600**	743-745
728171-92601	**REC728171-92601**	743-745
728176-92600	**REC728171-92601**	745
728176-92601	**REC728171-92601**	745
728271-92605	**REC728271-92605**	743-746
728370-92605	**REC728370-92605**	743
728374-92605	**REC728374-92605**	743-746
728633-22500	**REC728633-22500**	758
728790-92600	**REC728790-92600**	743-745
728990-92600	**REC728990-92600**	743-746
729120-22500	**REC729120-22500**	758
729171-92600	**REC729171-92600**	744-746
729270-92601	**REC729270-92601**	743-746
729271-92600	**REC729271-92600**	743-746
729408-92600	**REC729408-92605**	746
729408-92605	**REC729408-92605**	746
729470-92605	**REC729470-92605**	744-747
729573-92605	**REC729573-92605**	746-747
729670-92600	**REC729670-92600**	742-747
729693-92600	**REC729693-92600**	744-746
X02173476	**RECX02173476**	737
X0506597	**RECX02173476**	737
XN199611	**RECXN199611**	713-714-723

ES

BORG-WAGNER	784
DAMPER VELVET DRIVE	784
FILTRO ACEITE	784
KITS REPARACIÓN TRANSMISIÓN	785
CATERPILLAR	785
ALTERNADORES	789
ÁNODOS	788
BOMBAS ASPIRACIÓN DE AGUA MARINA	786
COLECTORES	785
ENFRIADOR COMBUSTIBLE	785
FILTRO ACEITE	785
MOTORES DE ARRANQUE	789
SILENTBLOCK	789
CHRIS-CRAFT	790
BOMBAS AGUA	790
BOMBAS COMBUSTIBLE	791
CARBURADORES	792
ENCENDIDO	792
FILTRO ACEITE	791
JUNTAS CODO, CULATA	790
MOTORES DE ARRANQUE	795
CRUSADER	795
BOMBA ASPIRACIÓN AGUA MARINA	799
BOMBA CIRCULACIÓN DE BLOQUE	799
BOMBA COMBUSTIBLE	800
CARBURADORES	802
ENCENDIDO	804
ESCAPE	796
FILTRO	801
JUNTAS DE MOTOR	795
MOTORES DE ARRANQUE	808
SENSORES	803
TERMOSTATO	801
CUMMINS	809
ALTERNADORES	812
ÁNODOS	812
BOMBA ASPIRACIÓN AGUA MARINA	809
COLECTORES ESCAPE	809
MOTORES DE ARRANQUE	812
SILENTBLOCK	809
DETROIT DIESEL	813
ÁNODOS	813
BOMBA ASPIRACIÓN AGUA MARINA	813
CODO ESCAPE	813
FISHER PANDA	814
BOMBAS AGUA	814
GENERADORES	814
HURT	815
TRANSMISION	815
INDMAR	815
ALTERNADORES	817
ARRANQUE	817
BOMBA ASPIRACIÓN AGUA MARINA	816
ENCENDIDO	816
ESCAPE	815
TUBO COMBUSTIBLE	816
KOHLER	818
ÁNODOS	820
BOMBAS AGUA	819
FILTRO	818
GENERADORES	820
TERMOSTATO	819
MAN	821
BOMBAS AGUA	821
MASE	822
BOMBAS AGUA	822
GENERADORES	822
NANNI DIESEL	823
ALTERNADOR	823
IMPULSORES	823
ONAN	824
ÁNODOS	827
BOMBA ASPIRACIÓN AGUA MARINA	825
BOMBAS DE AGUA	825
FILTRO	824
GENERADORES	828
MOTORES DE ARRANQUE	828
PERKINS	829
ÁNODOS	831
BOMBA AGUA	831
BOMBA ASPIRACIÓN AGUA MARINA	830
ESCAPE	829
FILTRO	829
MOTORES DE ARRANQUE	832
PLEASURECRAFT	832
ADAPTADOR GOMA	841
ALTERNADORES	840
BOMBA AGUA	834
BOMBA CIRCULACIÓN DE BLOQUE	833
BOMBA COMBUSTIBLE	835
CARBURADOR	835
COMPONENTES DE COLA	841
ENCENDIDO	836
ESCAPE	832
FILTRO ACEITE	835
JUNTAS CULATA	832
MOTORES DE ARRANQUE	840
POWER TRIM	841
SENSORES	836
RENAULT COUACH	842
ÁNODOS	843
FILTRO ACEITE	842
IMPULSORES	842
SOLE DIESEL	843
ÁNODOS	843
IMPULSORES	843
VETUS	844
ÁNODOS	844
IMPULSORES	844
WESTERBEKE	845
ALTERNADORES	846
ÁNODOS	847
BOMBAS AGUA	846
FILTRO ACEITE	845
GENERADORES	847
KITS CARBURADOR	845
MOTORES DE ARRANQUE	845
SHERWOOD	849
JABSCO	858
REF-->OEM	861
OEM-->REF	866

EN

BORG-WAGNER	784
DAMPER VELVET DRIVE	784
OIL FILTER	784
TRANSMISION REPAIR KIT	785
CATERPILLAR	785
ALTERNATORS	789
ANODES	788
FUEL COOLER	785
MANIFOLDS	785
OIL FILTER	785
RAW MARINE WATER PUMPS	786
SILENTBLOCK	789
STARTERS	789
CHRIS-CRAFT	790
CARBURETORS	792
CYLINDER HEAD & ELBOW	790
FUEL PUMP	791
IGNITON	792
OIL FILTER	791
STARTERS	795
WATER PUMPS	790
CRUSADER	795
BLOCK CIRCULATING PUMP	799
CARBURETORS	802
EXHAUST	796
FILTER	801
FUEL PUMP	800
GASKETS	795
IGNITON	804
RAW MARINE WATER PUMP	799
SENSORS	803
STARTERS	808
THERMOSTAT	801
CUMMINS	809
ALTERNATORS	812
ANODES	812
EXHAUST MANIFOLDS	809
RAW MARINE WATER PUMP	809
SILENTBLOCK	809
STARTERS	812
DETROIT DIESEL	813
ANODES	813
EXHAUST ELBOW	813
RAW MARINE WATER PUMP	813
FISHER PANDA	814
GENERATORS	814
WATER PUMPS	814
HURT	815
TRANSMISION	815
INDMAR	815
ALTERNATORS	817
EXHAUST	816
FUEL TUBE	816
IGNITON	816
RAW MARINE WATER PUMP	816
STARTERS	817
KOHLER	818
ANODES	820
FILTER	818
GENERATORS	820
THERMOSTAT	819
WATER PUMPS	819
MAN	821
WATER PUMPS	821
MASE	822
GENERATORS	822
WATER PUMPS	822
NANNI DIESEL	823
ALTERNATORS	823
IMPELLER	823
ONAN	824
ANODES	827
FILTER	824
GENERADORES	828
RAW MARINE WATER PUMP	825
STARTERS	828
WATER PUMPS	825
PERKINS	829
ANODES	831
EXHAUST	829
FILTER	829
RAW MARINE WATER PUMP	830
STARTERS	832
WATER PUMPS	831
PLEASURECRAFT	832
ALTERNATORS	840
BLOCK CIRCULATING PUMP	833
BUSHING	841
CARBURETORS	835
CYLINDER HEAD GASKETS	832
EXHAUST	832
FUEL PUMP	835
GEARHOUSING COMPONENTS	841
IGNITON	836
OIL FILTER	835
POWER TRIM	841
SENSORS	836
STARTERS	840
WATER PUMPS	834
RENAULT COUACH	842
ANODES	843
IMPELLER	842
OIL FILTER	842
SOLE DIESEL	843
ANODES	843
IMPELLER	843
VETUS	844
ANODES	844
IMPELLER	844
WESTERBEKE	845
ALTERNATORS	846
ANODES	847
CARBURETOR KITS	845
GENERATORS	847
OIL FILTER	845
STARTERS	845
WATER PUMPS	846
SHERWOOD	849
JABSCO	858
REF-->OEM	861
OEM-->REF	866

IT

BORG-WAGNER 784
DAMPER VELVET DRIVE 784
FILTRO OLIO 784
KIT RIPARAZIONE TRASMISSIONE 785
CATERPILLAR 785
ALTERNATORI 789
ANODI 788
COLLETTORI 785
FILTRO OLIO 785
MOTORINI AVVIAMENTO 789
POMPE ASPIRAZIONE ACQUA MARNIA 786
SCAMBIATORE DE COMBUSTIBILE 785
SILENTBLOCK 789
CHRIS-CRAFT 790
ACCENSIONE 792
CARBURATORI 792
FILTRO OLIO 791
GUARNIZIONE TESTATA, GOMITO 790
MOTORINO AVVIAMENTO 795
POMPE ACQUA 790
POMPE BENZINA 791
CRUSADER 795
ACCENSIONE 804
CARBURATORI 802
FILTRO 801
GUARNIZIONE MOTORE 795
MOTORINI AVVIAMENTO 808
POMPE ASPIRAZIONE ACQUA MARINA 799
POMPA BENZINA 800
POMPA DI RICIRCOLO DI BLOCCO 799
SCARICO 796
SENSORI 803
TERMOSTATO 801
CUMMINS 809
ALTERNATORI 812
ANODI 812
COLLETTORI SCARICO 809
MOTORINI AVVIAMENTO 812
POMPE ASPIRAZIONE ACQUA MARNIA 809
SILENTBLOCK 809
DETROIT DIESEL 813
ANODI 813
GOMITO SCARICO 813
POMPE ASPIRAZIONE ACQUA MAINA 813
FISHER PANDA 814
GENERATORI 814
POMPE ACQUA 814
HURT 815
TRASMISSIONE 815
INDMAR 815
ACCENSIONE 816
ALTERNATORI 817
AVVIAMENTO 816
MOTORINI AVVIAMENTO 817
POMPE ASPIRAZIONE ACQUA MARNIA 816
SCARICO 815
TUBO COMBUSTIBILE 816
KOHLER 818
ANODI 820
FILTRO 818
GENERATORI 820
POMPE ACQUA 819
TERMOSTATO 819
MAN 821
POMPE ACQUA 821
MASE 822
GENERATORI 822
POMPE ACQUA 822
NANNI DIESEL 823
ALTERNATORI 823
GIRANTI 823
ONAN 824
ANODI 827
FILTRO 824
GENERATORI 828
MOTORINI AVVIAMENTO 828
POMPE ACQUA 825
POMPE ASPIRAZIONE ACQUA MARINA 825
PERKINS 829
ANODI 831
FILTRO 829
MOTORINI AVVIAMENTO 832
POMPE ACQUA 831
POMPE ASPIRAZIONE ACQUA MARNIA 830
SCARICO 829
PLEASURECRAFT 832
ACCENSIONE 836
ADATTATORE IN GOMMA 841
ALTERNATORI 840
CARBURATORI 835
COMPONENTI PIEDE 841
GUARNIZIONI TESTATA 832
FILTRO OLIO 835
MOTORINI AVVIAMENTO 840
POMPE ACQUA 834
POMPE BENZINA 835
POMPA DI RICIRCOLO DI BLOCCO 833
POWER TRIM 841
SCARICO 832
SENSORI 836
RENAULT COUACH 842
ANODI 843
FILTRO OLIO 842
GIRANTI 842
SOLE DIESEL 843
ANODI 843
GIRANTI 843
VETUS 844
ANODI 844
GIRANTI 844
WESTERBEKE 845
ALTERNATORI 846
ANODI 847
FILTRO OLIO 845
GENERATORI 847
KIT CARBURATORI 845
MOTORINI AVVIAMENTO 845
POMPE ACQUA 846
SHERWOOD 849
JABSCO 858

REF-->OEM 861
OEM-->REF 866

FR

BORG-WAGNER 784
DAMPER VELVET DRIVE 784
FILTRE À HUILE 784
KIT RÉPARATION TRANSMISSION 785
CATERPILLAR 785
ALTERNATEUR 789
ANODES 788
COLLECTEURS 785
DÉMARREUR 789
FILTRE À HUILE 785
POMPE À EAU DE MER 786
REFFROIDISSEUR D'ESSENCE 785
SILENTBLOCK 789
CHRIS-CRAFT 790
ALLUMAGE 792
CARBURATEURS 792
DÉMARREUR 792
FILTRE À HUILE 791
JOINTS COUDE, CULASSE 790
POMPE D'EAU 790
POMPE D'ESSENCE 791
CRUSADER 795
ALLUMAGE 801
CAPTEURS 803
CARBURATEURS 802
DÉMARREUR 808
ÉCHAPPEMENT 796
FILTRE 801
JOINTS MOTEUR 795
POMPE À EAU DE MER 799
POMPE DE BRASSAGE 799
POMPE D'ESSENCE 800
THERMOSTAT 801
CUMMINS 809
ALTERNATEUR 812
ANODES 812
COLLECTEURS D'ÉCHAPPEMENT 809
DÉMARREUR 812
POMPE À EAU DE MER 809
SILENTBLOCK 809
DETROIT DIESEL 813
ANODES 813
COUDE D'ÉCHAPPEMENT 813
POMPE À EAU DE MER 813
FISHER PANDA 814
GENERATEURS 814
POMPE D'EAU 814
HURT 815
TRANSMISSION 815
INDMAR 815
ALLUMAGE 816
ALTERNATEUR 817
DÉMARREUR 817
DURITE CARBURANT 816
ÉCHAPPEMENT 815
POMPE À EAU DE MER 816
KOHLER 818
ANODES 820
FILTRE 818
GENERATEURS 820
POMPE D'EAU 819
THERMOSTAT 819
MAN 821
POMPE D'EAU 821
MASE 822
GENERATEURS 822
POMPE D'EAU 822
NANNI DIESEL 823
ALTERNATEUR 823
TURBINE 823
ONAN 824
ANODES 827
DÉMARREUR 828
FILTRE 824
GENERATEURS 828
POMPE À EAU DE MER 825
POMPE D'EAU 825
PERKINS 829
ANODES 831
DÉMARREUR 832
ÉCHAPPEMENT 829
FILTRE 829
POMPE À EAU DE MER 830
POMPE D'EAU 831
PLEASURECRAFT 832
ADAPTATEUR EN CAOUTCHOUC 841
ALLUMAGE 836
ALTERNATEUR 840
CAPTEURS 836
CARBURATEURS 835
COMPOSANTS D'EMBASES 841
DÉMARREUR 840
ÉCHAPPEMENT 832
FILTRE À HUILE 835
JOINTS DE CULASSE 832
POMPE D'EAU 834
POMPE DE BRASSAGE 833
POMPE D'ESSENCE 835
POWER TRIM 841
RENAULT COUACH 842
ANODES 843
FILTE À HUILE 842
TURBINE 842
SOLE DIESEL 843
ANODES 843
TURBINE 843
VETUS 844
ANODES 844
TURBINE 844
WESTERBEKE 845
ALTERNATEUR 846
ANODES 847
DÉMARREUR 845
FILTRE À HUILE 845
GENERATEURS 847
KITS CARBURATEURS 845
POMPE D'EAU 846
SHERWOOD 849
JABSCO 858

REF-->OEM 861
OEM-->REF 866

FILTRO ACEITE | OIL FILTER | FILTRO OLIO | FILTE À HUILE

REF	OEM	
ALT023941	100-238-002	VELVET DRIVE Abierto | Open | Aperto | Ouvert
ALT340940	2001-238-001	VELVET DRIVE Cerrado | Closed | Chiuso | Fermé



ALT023941



ALT340940

DAMPER VELVET DRIVE

REF	OEM		Ø (mm)	
ALTDA-101	1004-650-001		352,30	26



REF	OEM		Ø (mm)	
ALTDA-108	1004-650-008	AS7-K2C - 370 CID	157,97	26



REF	OEM		Ø (mm)	
ALTDA-102	1004-650-002	AS4-K1C Volante delantero Forward flywheel Volano Anteriore Volant avant	157,97	26



REF	OEM		Ø (mm)	
REC855694	1004-650-006	AS4-K2C -350 CID	169,16	26



REF	OEM		Ø (mm)	
ALTDA-107	1004-650-007	AS7-K2C - 430 CID	336,55	26



KITS REPARACIÓN TRANSMISIÓN — TRANSMISION REPAIR KIT — KIT RIPARAZIONE TRASMISSIONE — KIT RÉPARATION TRANSMISSION

REF	OEM	
A/P2277	A4867HA	VELVET 71 & 72

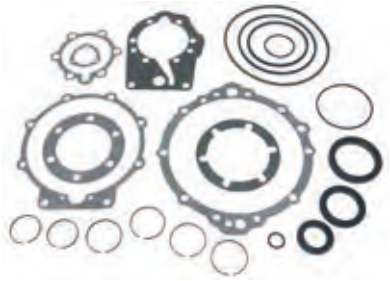

REF	OEM	
A/P2279	1308-410-001	V DRIVE

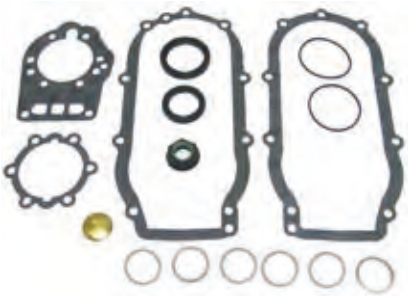

REF	OEM	
A/P2278		VELVET 71 & 72 Incluye discos Plates included Include dischi Comprend disques



CATERPILLAR

COLECTORES — MANIFOLDS — COLLETTORI — COLLECTEURS

REF	OEM	
REC8N2250	1W6586 8N2250	Para la mayoría motores 3208 For most engines 3208 Per la maggior parte dei motori 3208 Pour la majorité des moteurs 3208



ENFRIADOR COMBUSTIBLE — FUEL COOLER — SCAMBIATORE DE COMBUSTIBILE — REFFROIDISSEUR D'ESSENCE

REF	OEM	
REC300-0539	1W6586 8N2250	C32



FILTRO ACEITE — OIL FILTER — FILTRO OLIO — FILTE À HUILE

REF	OEM	
REC21707134	1R-0658	C32



REF	OEM	
REC847741	1R-0714	1 1/8" x 16 NPT



BOMBAS ASPIRACIÓN DE AGUA MARINA — RAW MARINE WATER PUMPS — POMPE ASPIRAZIONE ACQUA MARNIA — POMPE À EAU DE MER

REF	OEM				
SHEP176X	7E.4115 FP-7E4115 9Y-1304	Serie 3208	Ø 1 1/2"	Ø 1 3/4"	REC17000K



REF	OEM		
SHEG2902X	196-8895	C15 & C18 Serie 3406E	REC29000K



REF	OEM		
SHEP1710C	4P-7168 7E-3268	Serie 3116 P1710C P1710C P172	REC17000K



REF	OEM	
REC7C3613	7C3613	Serie 3412



REF	OEM		
REC3N4851	3N4851	Serie 3406	JAB17370-0001



REF	OEM	
REC7C3614	7C3614	Serie 3508



REF	OEM		
SHEP1732C	170-6116 113-1109 152-8392	C7 / C7 Serie 3126 P1732C P1732A	REC17000K



REF	OEM		
REC5N9357	5N9357	Serie 3304, 3306	CEF500135



new



REF	OEM			BOMBA PUMP POMPA POMPE	PORTS
RECG2904X	123-0471 197-1328	C12 serie 3196	REC29000K	G2904X G1807 G18071	71,5 mm

new



REF	OEM			BOMBA PUMP POMPA POMPE	PORTS
RECG3001X	147-7850 212-7264 322-8594	C32 serie 3412	SHE30000K	G3001X	3-3/4

new

REF	OEM			PORTS
REC425-5421	425-5421 4255421	generators C1.5 & C2.2	REC21213660	3/4



KITS REPARACIÓN — REPAIR KITS — KIT RIPARAZIONE — KIT RÉPARATION

BOMBA PUMP POMPA POMPE		KIT MENOR KIT MINOR KIT MINOR KIT MINEUR	KIT MAYOR KIT MAJOR KIT MAGGIORE KIT MAJEUR
SHEP176X	SHE17000K	SHE23973	SHE23975
SHEP1710C	SHE17000K	SHE25123	SHE25121
SHEG2902X	SHE29000K		SHE25147
SHEP1732C	SHE17000K	SHE25123	SHE25121
	SHE29000K		SHE25148
	SHE30000K	SHE25017	



SHE25148



SHE23973



SHE25123



SHE25017



SHE23975



SHE25121



SHE25147

IMPULSORES — IMPELLER — GIRANTE — TURBINE

OEM	PALAS BLADES PALE PALES	SHERWOOD	CEF	JOHNSON	JABSCO	RECMAR	A (mm)	B (mm)	C (mm)
3N1906	8		CEF500106GT	JOH09-1028B		REC3841697	14,29	65	50,2
3N5895	8		CEF500177GT		JAB17018-0001	REC3593573	14,29	65,2	75,65
1L4774	9		CEF500105T	JOH09-1029B		REC836-0001	22,5	96	63,1
7E3022	9				JAB18786-0001		25,4	118	88,9
3N8449	10	SHE22000K	CEF500179GX				23,8	114,3	109,5
7C3286	10		CEF500114T		JAB17937-0001-P		14,29	65	50,1
7E0321 1W5664	12	SHE17000K	CEF500164T			REC17000K	20	84	73
1230492 1095324 1095327 1237985	12		CEF500182G			REC18000K	20,7	94,5	20,7
4L8470	12		CEF500145T	JOH09-814B		REC875697	22,5	95	88,5
5N9360	12		CEF500135	JOH09-819B		REC21730344	22,5	95	63,1
3N4859	12		CEF500152		JAB17370-0001		25,4	95	88,9

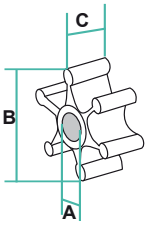


REC875697


REC21730344


REC17000K


REC3841697


REC3593573


REC836-0001


REC18000K

ÁNODOS — ANODES — ANODI — ANODES

TECNOSEAL save your dreams

KIT	KG		Ø (mm)	c (mm)	a (mm)
TEN02021/1T	0,03	35	9	14	7/16" UNF
TEN02021T	0,045	55	10	10	1/4" gas conico
TEN02022T	0,145	20	22	16	3/8" gas
TEN02023T	1,155	76	16	14	1/2" gas conico
TEN02024T	0,135	63	16	14	1/2" gas
TEN02026T	0,495	54	19	24	11/4" gas conico
TEN02027T	0,06	40	12	11	3/8" gas conico
TEN02028T	0,12	41	16	25	1/2" gas conico
TEN02029BIS/T	0,04	38	10	22	1/4" gas
TEN02029T	0,065	38	12,5	19	3/8" gas conico





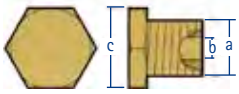

		OEM	KG	L (mm)	L1 (mm)	Ø (mm)	b (mm)	c (mm)	a (mm)
TEN02020			0,03	26	9	14	12 mm		
TEN02021		6L2283	0,03	55	10	10	1/4" UNC		
	TEN02021TP	6L2282	0,015				1/4" UNC	10	1/4" gas conic (bspt)
TEN02021/1		116-7011	0,015	35	10	9	1/4" UNC		
TEN02022		6L2016	0,065	20	10	22	5/8" UNC		
TEN02023		612289	0,105	76	13	16	3/8" UNC		
	TEN02023TP		0,040				3/8" UNC	14	1/2" gas conic (bspt)
TEN02024		6L2288	0,09	63	13	16	3/8" UNC		
	TEN02024TP		0,040				3/8" UNC	14	1/2" gas (bspp)
TEN02025		6L2284	0,035	33	12	14	5/16" UNC		
TEN02026		6L2286	0,242	54	20	19	3/4" UNC		
	TEN02026TP		0,280				3/4" UNC	24	1 1/4" gas conic (bspt)
TEN02027		6L2280	0,033	40	10	12	3/8" UNC		
	TEN02027TP	6L2279	0,025				3/8" UNC	11	3/8" gas conic (bspt)
TEN02028		7E5076	0,06	41	9	16	7/16" UNC		
	TEN02028TP		0,065				7/16" UNF	25	1/2" gas conio (bspt)
TEN02029		642281	0,035	38	10	12,5	7/16" UNC		
TEN02029BIS		6L3104	0,02	38	10	10	1/14" UNC		
	TEN02029TP	6L2279G	0,03				7/16" UNF	19	3/8" gas conic (bspt)

REF	OEM			Ø	
CM6L2016	6L2016	3/4"	1/2 x 13	22.26	20 mm
CME1	6L2280	3/8"	3/8 x 16	12.70	41 mm
CM6L2283	6L2283	1/4"	5/16 x 18	10.00	29 mm
CME8D	6L2284	1 1/4"	3/4 x 10	32.00	54 mm
CME-8	6L2285	1 1/4"	3/4 x 10	32.00	59 mm
CM6L2288	6L2288	1/2"	7/16 x 14	15.70	29 mm



SILENTBLOCK

REF	max KG			
RECDF238-M1	820- 1000 kg 1800 - 2200 lbs	3/4" - 16	127 mm	Serie 3208 & 3304B (85-340 HP)



REF	max KG			
RECDF4408-4	1130 - 1270 kg 2500 - 2800 lbs	1" - 14	127 mm	Serie 3208+



ALTERNADORES ALTERNATORS ALTERNATORI ALTERNATEUR

REF	OEM		
REC8HC2023K	796351	12V 90A	Para mayoria motores 3280 For most engines 3280 Per la maggior parte dei motori 3280 Pour la majoriteé 3280



MOTORES DE ARRANQUE STARTERS MOTORINI AVVIAMENTO DÉMARREUR

REF	OEM			
REC128000-5720	128000-5720	12V 3.0kw	10	Para mayoria motores 3114 - 3116 For most engines 3114 - 3116 Per la maggior parte dei motori 3114 - 3116 Pour la majorité de moteurs 3114 - 3116



REF	OEM			
REC21323043	163-3361	12V 1.4kw	9	C2.2 Serie 3024C, 3024T



JUNTAS CULATA — CYLINDER HEAD GASKETS — GUARNIZIONE TESTATA — JOINT DE CULASSE

REF	OEM	
REC17030	16.50-00250	GM 305, 350 CID (5.0L / 5.7L)

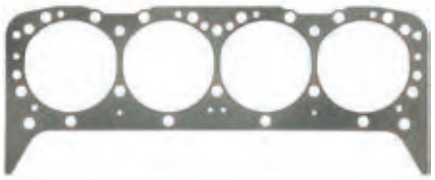

REF	OEM	
REC17046	16.50-00259	GM 454 CID (5.7L)

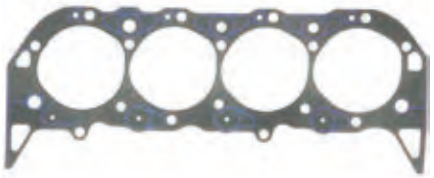

JUNTAS CODO — ELBOW GASKETS — GUARNIZIONE GOMITO — JOINT DE COUDE

REF	OEM
OSC0959	1650-05944



REF	OEM
BACC47-1650-06022	1650-056022



PROTECTOR SALIDA ESCAPE — EXHAUST PROTECTOR VALVE — PROTEZIONE SCARICO — PROTECTEUR SORTIE D'ÉCHAPPEMENT

REF	
REC34765A2	3"
REC12644A1	4"
REC89260	5" necesita 2 cortes de 45° 5" requires two 45° cuts 5" richiede due tagli a 45° 5" nécessite 2 coupes à 45°
	6"



REC34765A2



REC12644A1



REC89260

BOMBAS AGUA — WATER PUMPS — POMPE ACQUA — POMPE D'EAU

REF	OEM				KIT MENOR KIT MINOR KIT MINOR KIT MINEUR	KIT MAYOR KIT MAJOR KIT MAGGIORE KIT MAJEUR
SHEG30-2B	16.80-18346	1" NPT	350 V8	REC3854286	SHE23979	SHE12665



JUNTA BOMBA — WATER PUMP GASKETS — GUARNIZIONE POMPE ACQUA — JOINT DE POMPE

REF	OEM
REC27-34897	16.50-00078



KITS REPARACIÓN — REPAIR KITS — KIT RIPARAZIONE — KIT RÉPARATION

REF	OEM
SHE10077K	16.80-90047



REF	OEM
SHE10615K	16.80-90131



new

REF	OEM
SHE09959K	16.80-90166 16.80-90049

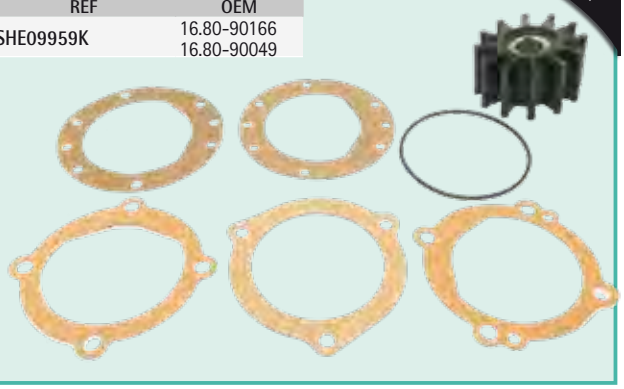

BOMBAS COMBUSTIBLE — FUEL PUMPS — POMPE BENZINA — POMPE D'ESSENCE

REF	OEM	
REC86234A4		GM 4 & 6 cyl 153, 181, 250, 224, 225



JUNTAS BOMBAS COMBUSTIBLE — FUEL PUMPS GASKETS — GUARNIZIONE POMPE BENZINA — JOINT POMPE D'ESSENCE

REF	OEM
REC27-34898	16.50-005756



REF	OEM
REC27-34213	16.50-00074



FILTRO ACEITE — OIL FILTER — FILTRO OLIO — FILTE À HUILE

REF	OEM	
REC35-06003	16.81-08746	GM 153, 181, 250 307G, 305K, 307K



REF	OEM	
REC35-06007	1R-16.81-06536	Ford 302,351



REF	OEM	
REC3850559		GM +283, 305, 307, 350, 454





CARBURADORES | CARBURETORS | CARBURATORI | CARBURATEURS

KITS | KIT | KIT | KIT

REF	OEM
REC823426A1	45334



REF	OEM
REC823427A1	



BOYAS | FLOATS | GALLEGIANTI | FLOTEURS

REF	OEM
REC1397-3327	



REF	OEM
REC1397-2060	



TUBO COMBUSTIBLE BOMBA --> CARBURADOR | FUEL TUBE PUMP -->CARBURETOR | TUBO CARBURANTE POMPA --> CARBURATORE | DURITE CARBURANT POMPE --> CARBURATEUR

REF	
REC18-8114	3/8" X 31" PTFE - 5/8"
REC18-8115	3/8" X 25" PTFE - 5/8"



ENCENDIDO | IGNITON | ACCENSIONE | ALLUMAGE

TAPAS DISTRIBUIDOR | DISTRIBUTOR CAPS | CALOTTE SPINTEROGENI | TÊTES D'ALLUMEUR

REF	OEM		
REC392-9766	45334	PRESTOLITE V8	Con tornillo Screw on con vite Avec vis



REF	OEM	
REC835702	18-5399	PRESTOLITE V8



REF	
REC33765T	DELCO



REF	OEM	
REC982209	16.69-00148	MALLORY V8



REF	OEM		
REC12532	16.69-00100 FI6900165	MALLORY V8	Tapa plana Flat cap Calotta piatta Tête plane



REF	OEM	
REC393-9459Q1	16.69-00052	DELCO



PLATINO — POINT — PUNTINE — VIS PLATINÉES

REF
REC8M6001219



REF	OEM
REC391-5090	16.69-00039



REF	OEM
REC34235T	16.69-00049



CONDENSADORES — CONDENSERS — CONDENSATORE — CONDENSEURS

REF	OEM
REC8M6001217	16.69-00040



REF
REC8M6001249



REF	OEM
REC33662	41057 16.69-00050



REF
REC33706



REF	OEM
REC64851	1869704



ROTORES — ROTORS — ROTORI — DOIGT D'ALLUMEUR

REF
REC3853801



REF	OEM
REC89825302	16.69-00149



REF
REC834975



REF	OEM
REC841243	16.69-00042



REF	OEM
REC58217	16.69-00051



KITS | KIT | KIT | KIT

REF	
REC3423A1	



REF		
REC391-5090Q1	Mallory 8 cyl.	



REF	
REC392-6324Q1	



DISTRIBUIDOR | DISTRIBUTOR | SPINTEROGENI | ALLUMEUR

REF		
REC17177A1	MALLORY YL624MW GM V8	



JUNTA DISTRIBUIDOR | DISTRIBUTOR GASKET | GUARNIZIONE SPINTEROGENI | JOINT D'ALLUMEUR

REF	OEM	
REC27-344861	16.50-00162	GM V6, V8



KITS CONVERSIÓN ELECTRÓNICO | ELECTRONIC CONVERSION KIT | KIT CONVERSIONE ELETTRONICO | KIT CONVESION ÉLECTRONIQUE

REF	
REC26904	Mallory YL o YD con rotación reloj y contrareloj. 8 cyl. For most Mallory V8 distributors 8 cilindri Mallory YL o YD con rotazione oraria e antioraria Mallory YL ou YD avec rotation dans le sens des aiguilles d'une montre et dans le sens inverse. 8 cyl.



REF	
REC26905	Para la mayoría de distribuidores Prestolite V8 con tornillo en la tapa For most Prestolite V8 distributors with screw on cap Per al maggior parte degli spinterogeni Prestolite V8 con vite nella calotta. Pour la plupart des distributeurs Prestolite V8 avec couvercle à vis



REF	
REC26901	Delco 6 cyl.



BOBINAS DE ENCENDIDO IGNITION COIL BOBINE ACCENSIONE BOBINE D'ALLUMAGE

REF	OEM	
REC1463-9382	37068 51080	Resistencia externa. Utilizar con encendido convencional. External resistor. Use with conventional ignition Resistenza esterna. Utilizzare con accensione convenzionale Résistance externe. A utiliser avec un allumage conventionnel.

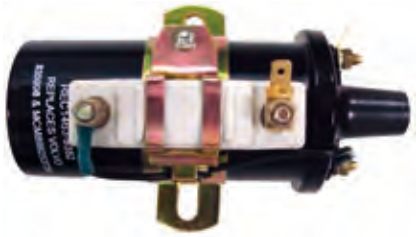

REF	
REC300-00879	No usa resistencia externa. Utilizar con encendido Prestolite. Use without external resistor & Prestolite ignition Non utilizza resistenza esterna. Utilizzare con spinterogeno Prestolite N'utilise pas de résistance externe. A utiliser avec l'allumage Prestolite.



MOTOR DE ARRANQUE STARTER MOTORINO D'AVVIAMENTO DÉMARREUR

REF	OEM			
REC50-99417A2	16.61-0042 16.61-0043	12V	9	4 en línea. (Tornillos en misma altura) 4 in line. (In line mounting holes) 4 in rete. (viti di supporto parallele) 4 en ligne. (Vis de montage parallèle)



CRUSADER

JUNTAS CULATA CYLINDER HEAD GASKETS GUARNIZIONE TESTATA JOINT DE CULASSE

REF	OEM
REC17010	33408

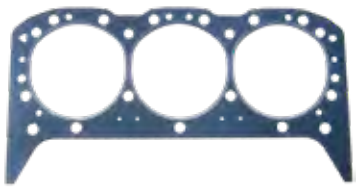

REF	OEM	
REC17048	31137	502 (8.2L) CID 7.4L

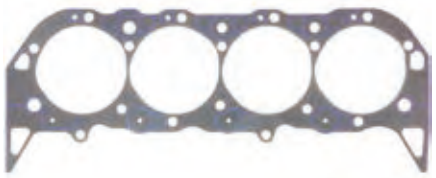

REF	OEM	
REC17030	7057500	GM305 (5.0L) 350 (5.7L) CID



REF	OEM	
REC17042	31136	454 (7.4L) CID GEN V

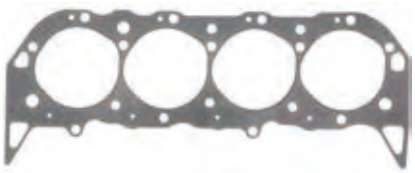

REF	OEM	
REC17040	30266	GM 454 (7.4L) CID

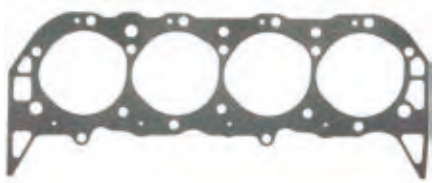

JUNTAS TAPA BALANCINES VALVE COVER GASKETS GUARNIZIONE COPERCHIO PUNTERIE JOINT CACHE CULBUTEUR

REF	OEM	
REC17920	97686	262 CID



REF	OEM	
REC17930	91351	V8



JUNTAS ADMISIÓN INTAKE GASKETS GUARNIZIONE ASPIRAZIONE JOINT ADMISSION

REF	OEM	
REC17310	33393	222 CID

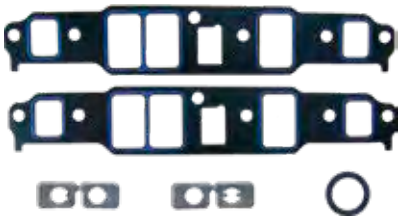

JUNTAS TAPA CADENA DISTRIBUCION TIMING CHAIN COVER GASKETS GUARNIZIONE CATENA CARTER DISTRIBUZIONE JOINT CARTER DE DISTRIBUTION

REF	OEM
REC27-14250	20129

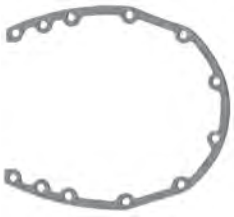

COLECTORES ESCAPE EXHAUST MANIFOLDS COLLETTORI SCARICO COLLECTEUR D'ECHAPPEMENT

GM SMALL BLOCK V8 5.0 & 5.7L, 220, 270

REF	OEM		KIT	
HOT20925	97752 96120	Estribor Stbd Tribordo Tribord	HOT20775-MK	5.0 & 5.7L, 220, 270
HOT20926	97753 96121	Babor Port Babordo Babord		



HOT20775-MK



GM BIG BLOCK V8 7.4L & 8.2L, 454XL

REF	OEM		KIT	
HOT20929	97992 97114	Estribor Stbd Tribordo Tribord	HOT20799-MK	7.4 & 8.2L
HOT20933	97993 97115	Babor Port Babordo Babord		



HOT20799-MK



GM SMALL BLOCK V8 5.0 & 5.7L, CM305, CM350XL & CM350HT

REF	OEM	KIT	
HOT20982	98125	HOT20982-MK	7.4 & 8.2L 454XL & 502XL





HOT20982-MK



GM BIG BLOCK V8 7.4 & 8.2L, 454XL & 502XL

REF	OEM	KIT	
REC98243	98243	OSC8243-MK	7.4 & 8.2L 454XL & 502XL



OSC8243-MK



JUNTAS COLECTOR ESCAPE / EXHAUST MANIFOLD GASKETS / GUARNIZIONE COLLETTORES CARICO / JOINT COLLECTEUR D'ECHAPPEMENT

REF	OEM
REC27-33395	96306



REF	OEM	COLL.
REC3852455		HOT20998



REF	OEM		
REC27-99757	97498	GM V6	



CODOS, SUPLEMENTOS Y KITS / ELBOWS, RISERS & KITS / GOMITI, DISTANZIALI E KIT / COUDES ET KIS

GM SMALL BLOCK V8 5.0 & 5.7L, CM305, CM350XL & CM350HT
GM BIG BLOCK V8 7.4 & 8.2L, 454XL & 502XL

REF	OEM	KIT	JUNTA	
HOT20938	98126	HOT20982-MK	OSC9015G	V8. 283, 305, 307, 327 & 350



HOT20982-MK



OSC9015G



REF	OEM	KIT	
HOT30984	98128	OSC8128-MK HOT30984-MK	V8 283, 305, 307, 327 & 350

SUPLEMENTO 4"
4" RISER
PROLUNGA 4"
SUPPLÉMENT 4"



OSC8128-MK
HOT30984-MK



GM SMALL BLOCK V8 5.0 & 5.7L, 220, 270
GM BIG BLOCK V8 7.4L & 8.2L, 454XL

REF	OEM	KIT	
HOT20934	98068 96560	HOT26562-MK	3"



REF	OEM	KIT			OEM
HOT20928	97924	HOT26562-MK	4"	V6 - V8	96562



CODO ESCAPE GIRATORIO
EXHUST ELBOW SWIVEL
GOMITO SCARICO GIRATORIO
COUDE D'ÉCHAPPEMENT PIVOTANT

REF	OEM	
OSC7387	97387	3"
OSC7624	97624	4"



REF	OEM	KIT
HOT20918	97386	HOT26562-MK

Codo revestido
Jacketed elbow
Gomito rivestito
Coude recouvert



REF	OEM	CODO ELBOW GOMITO COUDE	
REC96562 HOT26562-MK	96562	HOT20918	V6-V8



HOT26562-MK



REC96562

REF	OEM	KIT
HOT20916	97169	OSC7169-MK HOT20916-MK

SUPLEMENTO ESCAPE 8"
8" EXHAUST RISER
PROLUNGA SCARICO 8"
SUPPLÉMENT 8"



OSC7169-MK
HOT20916-MK



REF	OEM	KIT
HOT20927	97772	OSC7772-MK HOT20927-MK

SUPLEMENTO ESCAPE 4"
4" EXHAUST RISER
PROLUNGA SCARICO 4"
SUPPLÉMENT 4"



OSC7772-MK
HOT20927-MK



PROTECTOR SALIDA ESCAPE | EXHAUST PROTECTOR VALVE | PROTEZIONE SCARICO | PROTECTEUR DE SORTIE D'ÉCHAPPEMENT

REF	
REC34765A2	3"
REC12644A1	4"
REC89260	5" necesita 2 cortes de 45° 5" requires two 45° cuts 5" richiede due tagli a 45° 5" nécessite 2 coupes à 45
	6"


REC34765A2


REC12644A1


REC89260

BOMBA CIRCULACIÓN DE BLOQUE | BLOCK CIRCULATING PUMP | POMPA DI RICIRCOLO DI BLOCCO | POMPE DE BRASSAGE

REF	OEM	
REC46-8M0113735	67859 17670 811573 30103	Bidireccional. Para bloques GM grandes con tapa del distribuidor de acero estampado. Bi-directional. For big block GM engines with stamped steel timing covers. Bidirezionale. Per motori GM di grandi dimensioni con coperchi di distribuzione in acciaio stampato. Bidirectionnel. Pour les gros blocs GM avec couvercle de distributeur en acier estampé.



REF	OEM	
REC46-8M0113734	20318 7142520	GM V-6 y V8 de bloque pequeño. GM V-6 & small blocks V8 engines. GM V-6 e piccoli blocchi V8 motori V-6 GM et V8 à petit bloc.



REF	
REC3853796	Bidireccional. Bi-directional. Bidirezionale. Bidirectionne



BOMBA ASPIRACIÓN AGUA MARINA | RAW MARINE WATER PUMP | POMPA ASPIRAZIONE ACQUA MARINA | POMPE À EAU DE MER

REF	OEM	KIT			
SHEE35	97179	SHE11068	1" NPT	REC10615K	220, 270, 300 & 350



REF	OEM				BOMBA PUMP POMPA POMPE
RECP1014 SHEP1014	40050 RA057031	1-1/4" NPT	REC10615K	220, 270, 300, 350 & 545	P1014



REF	OEM	
REC3860703	40070	V6 & V8

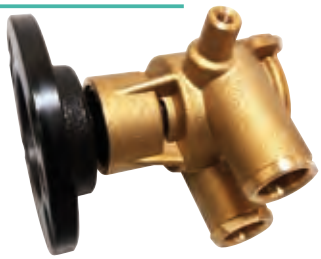

COJINETE BOMBA SHERWOOD | BEARING SHERWOOD PUMP | CUSCINETTO POMPA SHERWOOD | ROULEMENT POMPE SHERWOOD

REF	OEM
SHE4257	20292



KITS BOMBA SHERWOOD | KIT SHERWOOD PUMP | KIT POMPA SHERWOOD | KIT POMPE SHERWOOD

REF	OEM	
SHE09959K	1003026	Ø 2 7/16" Lat. 1 1/4"

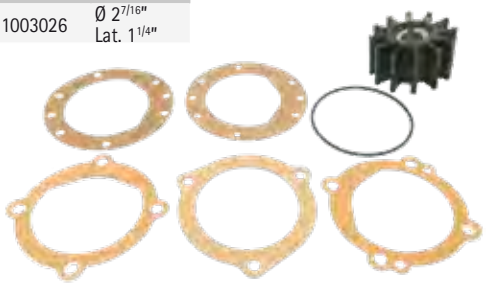

REF	OEM	
CEF500103T	1003062 1003026 22212	Ø 2 7/16" Lat. 1 1/4"



REF	OEM
REC10615K	20300
SHE10615K	20310
CEF500120T	R061017



REF	OEM
REC3854286	1003026 22212
REC10077K	727103



KITS RETÉN | KIT SEAL | KIT PARAOLIO | KIT JOINT

REF	OEM
SHE10927	20309



REF	OEM
SHE12859	40057



RACORD MANGUERA CODO | WATER FITTING | RACCORDO TUBO GOMITO | RACCORD TUYAU-COUDE

REF	
REC18-8112	1 1/4"



BOMBAS COMBUSTIBLE | FUEL PUMP | POMPA BENZINA | POMPE ESSENCE

REF	OEM	
REC3855276	981650	GM V8, 305, 307, 350, 400 (5.25 - 6.5 PSI)





REF	OEM	
REC62092T	982063	FORD V8, 302



TERMOSTATO — THERMOSTAT — TERMOSTATO — THERMOSTAT

REF	OEM	
REC76270T	96358	70º C

Sólo para circuitos Agua dulce
Thermostat for fresh water cooling only
Solo per circuiti ad acqua dolce
Pour les circuits d'eau douce uniquement



REF	OEM	
REC8M0091470	97895	70º C

Sólo para circuitos Agua dulce
Thermostat for fresh water cooling only
Solo per circuiti ad acqua dolce
Pour les circuits d'eau douce uniquement



REF	OEM	
REC97361	97361	70º C



FILTRO — FILTER — FILTRO — FILTRE

FILTRO SEPARADOR DE AGUA — WATER SEPARATING FUEL FILTER — FILTRO SEPARATORE ACQUA-BENZINA — FILTRE D'ESSENCE

REF	OEM
REC35-8M0061975	98041



FILTRO COMBUSTIBLE — FUEL FILTER — FILTRO BENZINA — FILTRE D'ESSENCE

REF	OEM
REC982230	91606



FILTRO ACEITE — OIL FILTER — FILTRO OLIO — FILTRE D'HUILE

REF	OEM	
REC35-06003	201104	GM + SS330 Remote Mount



REF	OEM	
REC35-06007	9002514	FORD



REF	OEM	
REC3850559	201104	GM + SS330 Remote Mount





REF	OEM	
REC3517857		220, 300, 320, 325 Remote Mount



RECAMBIO PARA CARBURADORES ROCHESTER 2 & 4 BBL
ELEMENT FOR ROCHESTER 2 & 4 BBL CARBURETORS
CARTUCCIA PER CARBURATORI ROCHESTER 2 E 4 BBL
FILTRE D'ESSENCE POUR CARBURATEURS ROCHESTER 2 ET 4 BBL

REF
REC93568



CARBURADORES
CARBURETORS
CARBURATORI
CARBURATEURS

KITS
KIT
KIT
KIT

REF
REC841994

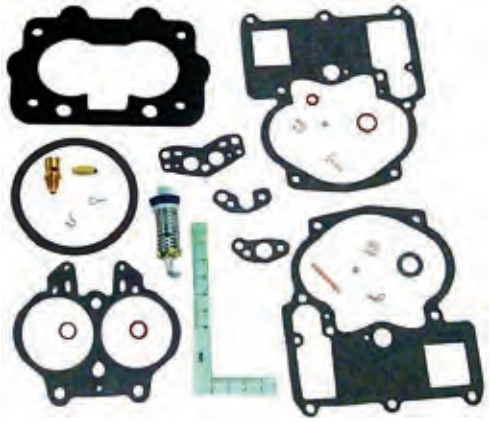

REF
REC823427A1



REF	OEM
REC823426A1	45334

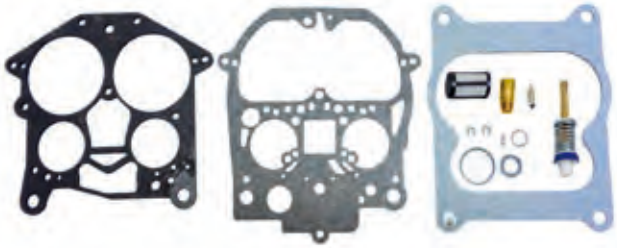

GUIA KITS CARBURADORES
CARBURETORS KITS APPLICATION
GUIDA KIT CARBURATORE
GUIDA KITS CARBURATEURS

CYL		CODE	MOD.	CARB.	KIT	
4"	153" 2.5L	R-2	2GC	7025082 7028086	REC823427A1	REC1397-2060
6"	225" 3.7L	R-2	2GC	7025181	REC823427A1	
8"	283" 4.6L 327" 5.3L	R-2	2GC	7024185	REC823427A1	
8"	305" 5.0L	R-2	5GV	17057134	REC841994	REC3302-9031
8"	350" 5.7L 454" 7.4L	R-4	4MV	17059293 17082403	REC823426A1	REC1397-3327
8"	427" 7.0L	R-4	4MV	7027081 7028282	REC823426A1	REC1397-3327

TUBO COMBUSTIBLE BOMBA --> CARBURADOR
FUEL TUBE PUMP -->CARBURETOR
TUBO CARBURANTE POMPA --> CARBURATORE
DURITE CARBURANT POMPE --> CARBURATEUR

REF	
REC18-8114	3/8" X 31" PTFE - 5/8"
REC18-8115	3/8" X 25" PTFE - 5/8"



BOYAS / FLOATS / GALLEGIANTI / FLOTEURS

REF	OEM
REC1397-3327	



REF	OEM
REC1397-2060	45303



REF	OEM
REC3302-9031	



APAGALLAMAS / FLAME ARRESTORS / PARAFIAMMA / ARRÊTEURS DE FLAMMES

REF	OEM	
REC85785A2	97595 97214	V-8



REF	OEM	
REC805298A1	33628	Hi-Performance



SENSORES / SENSORS / SENSORI / CAPTEURS

TEMPERATURA ACEITE / OIL TEMPERATURE / TEMPERATURA OLIO / TEMPÉRATURE D'HUILE

REF	OEM		TERMINAL
REC8M0068784	700425	1/8 -27	10-31



TEMPERATURA AGUA / WATER TEMPERATURE / TEMPERATURA ACQUA / TEMPÉRATURE D'EAU

REF	OEM	
REC97258A1	700427	1/2"-14NPT



TPS

REF	OEM
REC8M0125617	47032



IAC

REF	OEM
REC3855194	47033



TEMPERATURA ENFRIADOR / COOLER TEMPERATURE / TEMPERATURA SCAMBIATORE / TEMPÉRATURE REFFROIDISSEUR

REF	OEM
REC3850397	47002



ENCENDIDO | IGNITON | ACCENSIONE | DÉMARRAGE

TAPAS DISTRIBUIDOR | DISTRIBUTOR CAPS | ALOTTE SPINTEROGENI | TÊTE D'ALLUMEUR

REF	OEM		
REC392-9766	41076	PRESTOLITE V8	Con tornillo Screw on con vite Avec vis



REF	OEM	
REC835702	41052	PRESTOLITE V8 CLIP



REF	
REC33765T	DELCO



REF	OEM	
REC982209	20222	MALLORY V8



REF	OEM		
REC12532	16.69-00100 FI6900165	MALLORY V8	Tapa plana Flat cap Calotta piatta Tête plane



REF	
REC3854260	4 cyl



REF	OEM		
REC3854548	38070	DELCO V8	Encendido electrónico Electronic ignition Accessione elettronico Allumage eléctronique



REF		
REC3854331	DELCO V6	Encendido electrónico Electronic ignition Accessione elettronico Allumage eléctronique



REF	OEM	
REC392-9086T	41069	PRESTOLITE V6



REF	OEM	
REC33708	12528	V8



REF	OEM
REC393-4988	3000121



PLATINO — POINT — PUNTINE — VIS PLATINÉES

REF
REC34235T



REF	OEM
REC391-5090	20117



REF	OEM
REC8M6001219	41058



REF	OEM
REC58033	3000124



CONDENSADORES — CONDENSERS — CONDENSATORE — CONDENSEURS

REF	OEM
REC8M6001217	12530



REF
REC8M6001249



REF	OEM
REC33662	41057 705787



REF	OEM
REC33706	12526



ROTORES — ROTORS — ROTORI — DOIGTS D'ALLUMEUR

REF	OEM
REC3853801	41089 41074



REF	OEM
REC65864	3000122



REF	OEM
REC834975	41059



REF	OEM
REC3854261	3854261



REF	OEM
REC89825302	20223



REF	OEM	
REC3854311	20223	DELCO V6



REF	OEM
REC841243	12531 1003318



REF	OEM	
REC3854549	38071	V8



REF
REC58217



KITS

REF
REC3423A1



KIT

REF	
REC391-5090Q1	Mallory 8 cyl.



REF	
REC392-6325Q1	V8 Prestolite Clip



KIT

REF	
REC392-6324Q1	Prestolite V6 & V8



DISTRIBUIDOR

REF	OEM	
REC17177A1	37061	MALLORY GM V8

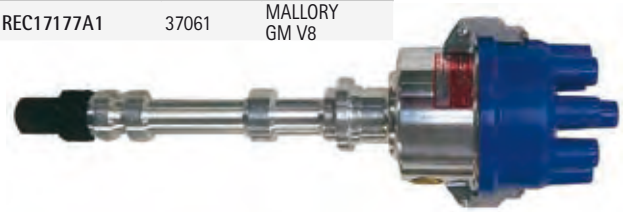

REF	KIT
REC392-6316	REC391-5090Q1

MALLORY YL512CV Ford 302 CID V8



REF
REC817377

181 RX
Delco est ignition



DISTRIBUTOR

SPINTEROGENI

REF	
REC807964A1	V6



ALLUMEURS

REF	OEM	
REC805222A1	RA107039E	V8 262, 454, 502 except 384/409

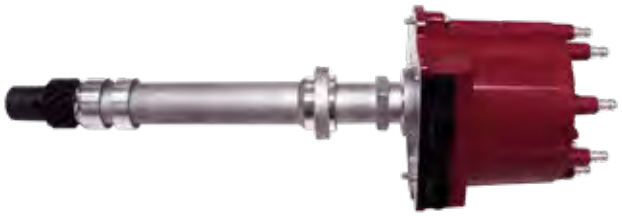

KITS CONVERSIÓN ELECTRÓNICO — ELECTRONIC CONVERSION KIT — KIT CONVERSIONE ELETTRONICO — KIT CONVESION ÉLECTRONIQUE

REF	
REC26904	Mallory YL o YD con rotación reloj y contrareloj. 8 cyl. For most Mallory V8 distributors 8 cilindri Mallory YL o YD con rotazione oraria e antiroaria Mallory YL ou YD avec rotation dans le sens des aiguilles d'une montre et dans le sens inverse. 8 cyl.



REF	
REC26901	Delco 6 cyl.



REF	
REC26905	Para la mayoría de distribuidores Prestolite V8 con tornillo en la tapa For most Prestolite V8 distributors with screw on cap Per al maggior parte degli spinterogeni Prestolite V8 con vite nella calotta. Pour la plupart des distributeurs Prestolite V8 avec couvercle à vis



BOBINAS DE ENCENDIDO — IGNITION COIL — BOBINE ACCENSIONE — BOBINES D'ALLUMAGE

REF	OEM	
REC3854002	7243200	4 cyl V8 3.0L (1991+) 5.7 & 7.4 efi (1995+)



REF	OEM	
REC3854161	3854161	FORD



REF	
REC1463-9382	Resistencia externa. Utilizar con encendido convencional. External resistor. Use with conventional ignition Resistenza esterna. Utilizzare con accensione convenzionale Résistance externe. A utiliser avec un allumage conventionnel. 37068 51080

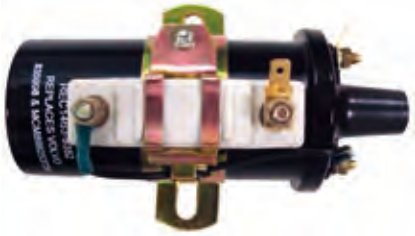

REF	
REC300-00879	No usa resistencia externa. Utilizar con encendido Prestolite. Use without external resistor & Prestolite ignition Non utilizza resistenza esterna. Utilizzare con spinterogeno Prestolite N'utilise pas de résistance externe. A utiliser avec l'allumage Prestolite.



REF
REC3854001



REF	OEM	
REC3854003	7243110	4, 6, 8 cyl



JUEGOS DE CABLES, ALTO RENDIMIENTO / HD SPARK PLUG WIRE SET / KIT CAVI CANDELE, ALTE PRESTAZIONI / KIT FAISCEAU DE BOUGIE

Núcleo del cable de Kevlar de 8 mm antimagnético. Funda de silicona amarilla. Terminales bujías con muelle de acero inox. Terminal del distribuidor de cobre. Terminales bobina. Silicona resistente a altas temperaturas. Garantía de 5 años.

Antimagnetic Kevlar core. Yellow silicone boot & jacket. SS snaplock. Brass distributor terminal. Coil terminals. High resistant silicone. 5 year warranty.

Nucleo del cavo di Kevlar da 8 mm antimagnetico. Copertura di silicone gialla. Terminali candele con molle di acciaio inox. Terminale lato spinterogeno in rame. Terminale Bobine. Silicone resistente alle alte temperature. Garanzia di 5 anni.

Noyau en Kevlar antimagnétique. Gaine en silicone jaune.Bornes de bougie d'allumage avec ressort en acier inoxydable. Terminal de distribution en laiton. Bornes de bobine. Silicone haute résistance. Garantie de 5 ans.

1	Camisa de silicona de 8 mm	8 mm silicone jacket	Rivestimento in silicone da 8 mm	Gaine silicone de 8mm
2	Látex resistente altas temperaturas	Heat resistant latex	Latex resistente alle alte temperature	Latex résistant à haute température
3	Acero inox	Stainless Steel	Acciaio inox	Acier inox
4	Núcleo de Kevlar	Kevlar core	Nucleo de Kevlar	Noyau de Kevlar
5	Capuchón de silicona	Silicone jacket	Rivestimento in silicone	Capuchon en silicone
6	Trenzado especial fibra de vidrio	Fiberglass braiding	Fibra di vetro	Tresse en fibre de verre
7	Terminal de acero inox	Stainless Steel terminal	Terminale di acciaio inox	Terminal en acier inox

	CYL	ARRANQUE IGNITION AVVIAMENTO DEMARRAGE CONVEN.	ELECT.	SERIE XL	REF
262/4.3L	6	✓			REC15-604
262/4.3L	6		✓		REC15-601
305/5.0L	8	✓			REC15-801
350/5.7L	6	✓			REC15-801
350/5.7L	8		✓		REC15-805
454/7.4L	8	✓			REC15-801
454/5.7L	8			✓	MAG15-803
502/8.2L	8	✓			REC15-801
502/8.2L	8			✓	MAG15-803

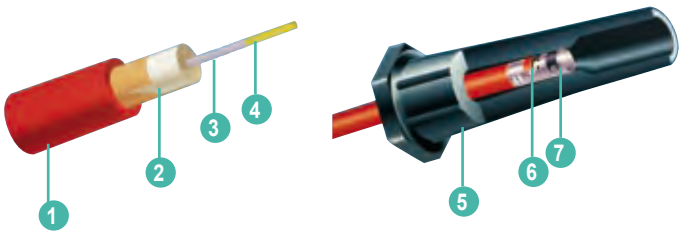

MOTORES DE ARRANQUE / STARTERS / MOTORINI AVVIAMENTO / DÉMARREURS

REF	OEM			
REC50-97499A2	42090 RA122008 1109484 19010617	12V 1.4kW	9	170, 185, 200, 225, 230, 283, 305, 307, 327, 348, 350, 364, 409, 427, 454, 496



REF	OEM			
REC50-808011A05	42091 RA122009 1109485 9000888 19010615	12V 1.4 kW	9	Contrarrotación o montaje en campana CCW Starter Controrotante o montato nella campana Contre-rotation ou montage sur capot



REF	OEM			
REC50-863007A1	RA122015	12V 1.4 kW	496	11



REF	OEM			
REC50-99418A2	1109482	12V	262, 454	9



COLECTORES ESCAPE | EXHAUST MANIFOLDS | COLLETTORI SCARICO | COLLECTEUR D'ECHAPPEMENT

REF	OEM	
REC3922122	3922122 4020066 4019951	6B, 6BT & 6BTA



SILENTBLOCK

REF	max KG			
RECDF477-M-3	430 - 900 kg 950 - 2000 lbs	3/4"	127 mm	3.9L 4 cil 5.9L 6 cil. 80 - 370 hp



BOMBA ASPIRACIÓN AGUA MARINA | RAW MARINE WATER PUMP | POMPA ASPIRAZIONE ACQUA MARINA | POMPE À EAU DE MER

REF	OEM				
DJC0819 SHEP1722C	3912139 3922589	Ø 2"	Ø 1 3/4"	REC17000K	6B & 6C 270-450 HP (8.3L)



new

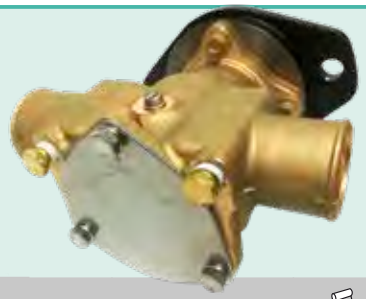

REF	OEM					
RECP1722C	3912139 3922589 3964989	2"	1-3/4"	REC17000K	6CTA 8.3	P1722C

BOMBA
PUMP
POMPA
POMPE

REF	OEM				
DJC0820 SHEM71	3912019 3010336 3278137 3907458	Ø 1/4"	Ø 1/4"	REC10615K	4 cyl B Series 210 HP (3.9L) 4B 4BT3.9 6BT5.9



REF	OEM				
DJC004	3010336 3278137	Ø 1/2"	Ø 1/2"	CEF500135	NH220 NH250 V555 NT855



REF	OEM		
SHEG2603X	3967246 3922589	SHE26000K	QSC & QSM11 QSC & QSB

Codos no incluidos
Elbows not included
Gomito non incluso
No comprend coudes



REF	OEM		
SHEG2903X	4929178 3349392 5260393	SHE29000K	QSM11

Codos no incluidos
Elbows not included
Gomito non incluso
No comprend coudes



REF	OEM			
DJC1730 SHEP1730C	3866493 3897194	REC17000K	6CTA 8.3M 6CTA 5.9 (270 - 450 HP) (5.9 & 8.3L) Codos con brida Flanged Elbows Gomiti con fascetta avec collier	



REF	OEM				
DJC0830 SHEGC1	3912962	Ø 1 1/2"	Ø 1 1/2"	REC15000K	6& 4B Series 250 HP



REF	OEM				
DJC2701	3922589	Ø 1/2"	Ø 1/2"	REC17000K	QSB5.9 QSB6.9

Se suministra sin conexiones ni piñón delantero.
It is supplied without connections or front pinion.
Viene fornito senza connessioni o pignone anteriore.
Livré sans raccords ni pignon avant.



new



REF	OEM					BOMBA PUMP POMPA POMPE
RECP1716C SHEP1716C	3919899 3922590	2"	1-3/4"	REC17000K	6B	P1716C

REF	OEM				
SHEGC5	39127684	Ø 1 1/2"	Ø 1 1/2"	REC15000K	6B Series 250 HP



REF			
SHEP2708X	SHE27000K	QSC	

Codos no incluidos
Elbows not included
Gomito non incluso
No comprend coudes



REF	OEM			
SHEP1727C	3897194	REC17000K	6B & 6C 270-450 HP 8.3L	

Codos con brida
Flanged Elbows
Gomiti con fascetta
Coudes avec collier



REF	OEM		
SHEP1016	854179001 879312023	SHE10615K	CMD 2.8 EI, ES (170/200) CMD QSD 2.8 EI, ES (170/210/220/230) CMD QSD 2.0 EI, ES (115/130/150)



KITS REPARACIÓN — REPAIR KITS — KIT RIPARAZIONE — KIT RÉPARATION

BOMBA PUMP POMPA POMPE		KIT MENOR KIT MINOR KIT MINOR KIT MINEUR	KIT MAYOR KIT MAJOR KIT MAGGIORE KIT MAJEUR
DJC004	CEF500135		
DJC0819	REC17000K		
DJC0820	REC10615K		
DJC0830	REC15000K		
DJC1730	REC17000K		
DJC2701	REC17000K		
SHEGC1	SHE15000K	SHE23980	SHE23981
SHEGC5	SHE15000K	SHE23980	SHE23981
SHEG2603X	SHE26000K	SHE24841	SHE24842
SHEG2903X	SHE29000K	SHE25044	SHE25045
SHEM71	SHE10615K	SHE23976	SHE23977
SHEP1016	SHE10615K		
SHEP1716C	SHE17000K	SHE25124	SHE25122
SHEP1722C	SHE17000K	SHE25124	SHE25122
SHEP1727C	SHE17000K	SHE25124	SHE25122
SHEP1730C	SHE17000K	SHE25124	SHE25122
SHEP2708X	SHE27000K	SHE25125	SHE25126


SHE23980


SHE23981


SHE24841


SHE24842


SHE25044


SHE25045


SHE23976


SHE23977


SHE25124


SHE25125


SHE25122


SHE25126

IMPULSORES — IMPELLER — GIRANTE — TURBINE

OEM	PALAS BLADES PALE PALES	SHERWOOD	CEF	RECMAR	A (mm)	B (mm)	C (mm)
3802444 3897337 3916852 3925236	12	SHE17000K	CEF500164T	REC17000K	20,1	84	73,5
3349198 3916720	12	SHE15000K	CEF500167	REC15000K	16	65	51,2
3908220	12	SHE10615K	CEF500120T	REC10615K	15,9	65,2	41,3
3972366	12	SHE26000K	CEF500183G		20	94,5	79,8
3974456	12	SHE27000K	CEF500181G	REC27000K	16,1	84	73
	12	SHE29000K	CEF500192GX	REC29000K	20	94,5	101,5
4019403 4933743	12	SHE18000K	CEF500182G	REC18000K	20,7	94,5	101,5

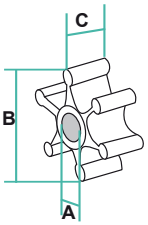


REC17000K


REC15000K


REC10615K


REC27000K


REC29000K

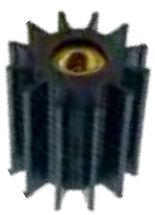
REC18000K

ÁNODOS ANODES ANODI ANODES

REF	KG		Ø	c (mm)	a (mm)	
TEN02043T	0,120	1/2 x 13	16	22	1/2" gas conico	50 mm
TEN02044T	0,120	3/8 x 16	15.5	22	1/2" gas conico	50 mm





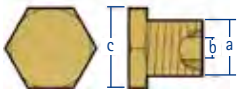

		OEM	KG	L (mm)	L1 (mm)	Ø (mm)	b (mm)	c (mm)	a (mm)
TEN02040			0,140	65	15	18	16 x 1,5 mm		
TEN02041			0,045	31	12	16	3/8" UNC		
TEN02042			0,012	20	8	10	M6		
TEN02043			0,085	50	10	16	15,5 mm		
TEN02044		68241	0,070	50	9	15,5	7/16"		
	TEN02044TP		0,055				7/16" UNF	22	1/2" gas conico (bspt

MOTORES DE ARRANQUE STARTERS MOTORINI AVVIAMENTO DÉMARREUR

REF	OEM			
REC3916854	3916854 3904445	12V	10	3.9L 4 cil & 5.9L 6 cil 6BT & Peniunsular 6.2L 6.9 & 7.3L Star Power



REF	OEM			
REC3604654RX	3604654RX	12V	10	6BT 5.9L



ALTERNADORES ALTERNATORS ALTERANATORE ALTERNATEUR

REF		SERPENT.	
REC807653T	12V 65A	6 (50 mm)	El 165, 250, 300 ES 165, 250, 300 2.8 & 4.2L



REF	OEM		SERPENT.	
REC882571	882571 8M0084523	12V 50A	6 (50 mm)	CMD 1.7 MI 120 L/L4 CMD 1.7 MS 120 L/L4

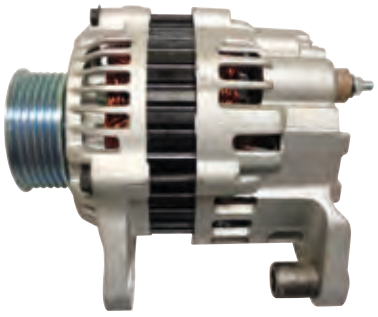

CODO ESCAPE — EXHAUST ELBOW — GOMITO SCARICO — COUDE D'ECHAPPEMENT

REF	OEM	
HGE1086		DD 6-71TI



ÁNODOS — ANODES — ANODI — ANODES

REF		Ø	B (mm)	
CME4	3/4"	19	5/8 x 11	86
CME2	1/2"	16	7/16 x 14	51
CM8515842	3/4"	19	5/8 x 11	58
CM8515850	3/4"	19	5/8 x 11	100
CME1E	3/8"	12.7	3/8 x 16	38



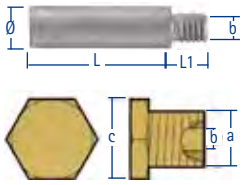

BOMBA ASPIRACIÓN AGUA MARINA — RAW MARINE WATER PUMP — POMPA ASPIRAZIONE ACQUA MARINA — POMPE À EAU DE MER

REF	OEM		
REC5197221	5197221	REC17937-0001	271



REF	OEM	JABSCO		
REC8923363	8923363 23507475 23507476 23507477 23507973	18760	REC17937-0001	8V92TA 16V92TA



REF	OEM	JABSCO		
REC5145578	5145578 5145577 5145576	17050 7260 17030	REC17937-0001	353 453 471



REF	OEM	JABSCO		
REC8927296	8927296 18780	18780 18789	REC18786-0001	12V71TI 12V92TA 16V149TA



REF	OEM	JABSCO		
REC23535447	23535477 23525200	17540-0001 17540-0201	REC18786-0001	60



IMPULSORES — IMPELLER — GIRANTE — TURBINE

OEM	PALAS BLADES PALE PALES	JOHNSON	JABSCO	SHERWOOD	CEF	RECMAR	A (mm)	B (mm)	C (mm)
	10			SHE18000K	CEF500114T	REC17937-0001	14,29	65	50,1
8927570	12		JAB17370-0001		CEF500152	REC17370-0001	20,2	95	88,5
23502086	9		JAB18786-0001		CEF500153	REC18786-0001	20,2	117,6	88,5
5196168	12	JOH09-814B			CEF500145T	REC875697	22,5	95	88,5
8924838	12	JOH09-819B			CEF500135		22,5	95	63,1
5193553	9	JOH09-1029B			CEF500105T	REC836-0001	22,5	96	93,1
5193602 5196629 5199148	8	JOH09-1028B			CEF500106GT	REC3841697	14,29	65	50,2

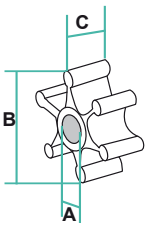



REC17370-0001 REC18786-0001 REC875697 REC836-0001 REC17937-0001 REC3841697

FISHER PANDA

BOMBA AGUA — WATER PUMP — POMPA ACQUA — POMPE D'EAU

REF	OEM				GENER.	BOMBA PUMP POMPA POMPE
REC10-35127-3	10-35127-3 FP1-000410 IC36.03.01.007H 060-068-0-0-B	3/4"	3/4"	REC653-0001	MINI TYPE PMS6/8/12 (Kubota)	F4B-9



REF	OEM				EJE SHAFT ASSE ARBRE	GENER.	BOMBA PUMP POMPA POMPE
REC10-24571-01	10-24571-01 20291	3/4"	3/4"	REC21213660	17 mm	PMS152025KUB IS12, 14, 16, 19	F5B-8

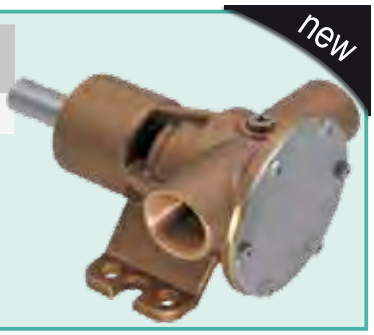

GENERADORES — FENERATORS — GENERATORI — GENERATEUR

		KIT	FILTRO ACEITE OIL FILTER FILTRO OLIO FILTRE HUILE
AGTPM 4	REC10077K	REC3586496	
PMS 4	REC3586496	REC3586496	
PMS 8 Mini	REC3586496		
PMS 8 DP	REC3586496		
PMS 4200	REC3586496		
PMS 6500	REC3586496		
PMS 12 DP	REC3586496		
PMS 12 Mini	REC3586496		

		KIT	FILTRO ACEITE OIL FILTER FILTRO OLIO FILTRE HUILE
PMS 15	REC3586496	REC21213660	
PMS 16 DP		REC21213660	REC1855835
PMS 20		REC21213660	
PMS 22		REC21213660	REC1855835
PMS 25		REC21213660	
PMS 30		REC21213660	
PMS 40		REC21213660	
PMS 50		REC21213660	

HURT

KIT REPARACIÓN TRASMISIÓN | TRANSMISSION REPAIR KIT | KIT RIPARAZIONE TRASMISSIONE | KIT RÉPARATION TRANSMISSION

REF	
A/P2281	20, 220 & 250



FILTRO TRASMISIÓN | TRANSMISSION FILTER | FILTRO TRASMISSIONE | FILTRE TRANSMISSION

REF	
REC016940	35-815419 8791014241 879194241 35-813405A1 35-813405 F19608751 FFF001138

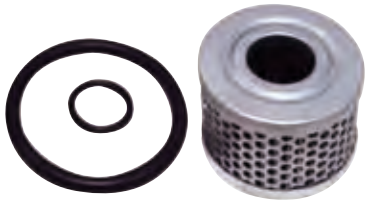

INDMAR

COLECTOR ESCAPE | EXHAUST MANIFOLD | COLLETTORI SCARICO | COLLECTEURS D'ECHAPPEMENT

REF	OEM		KIT
HOT20997	0994-000	V8 5.0 & 5.7L Bloque pequeño Small block Blocco piccolo Bloque petit 305 & 350	OSC994-MK



REF	OEM		KIT
HOT20998	53-2800	302-351	HOT20998-MK



CODO ESCAPE | EXHAUST ELBOW | GOMITO SCARICO | COUDE D'ECHAPPEMENT

REF	OEM			
HOT20907	53-2009 53-2018	30°	3"	DD 6-V8 5.0 & 5.7L Bloque pequeño | Small block Blocco piccolo | Bloque petit 305 & 350



REF	OEM			
HGE2027	53-2027-T	30º	3.5"	DD 6-V8 5.0 & 5.7L Bloque pequeño | Small block Blocco piccolo | Bloque petit 305 & 350
HOT20939		10º	4"	



HGE2027

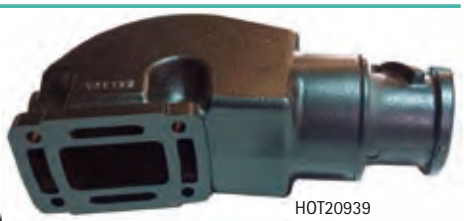

HOT20939

KITS MONTAJE | MONTING KIT | KIT MONTI | KIT DE MONTAGE

REF	OEM
HOT20998-MK	
OSC994-MK	
HOT20992-MK	



HOT20998-MK



HOT20992-MK



OSC994-MK

TUBO COMBUSTIBLE BOMBA --> CARBURADOR | FUEL TUBE PUMP -->CARBURETOR | TUBO CARBURANTE POMPA --> CARBURATORE | DURITE CARBURANT POMPE --> CARBURATEUR

REF	
REC18-8114	3/8" X 31" PTFE - 5/8"
REC18-8115	3/8" X 25" PTFE - 5/8"



BOMBA ASPIRACIÓN AGUA MARINA | RAW MARINE WATER PUMP | POMPA ASPIRAZIONE ACQUA MARINA | POMPE À EAU DE MER

REF	OEM	KIT
REC3860703	685011	REC21213660



IMPULSOR | IMPELLER | GIRANTE | TURBINE

REF
JOH09-802B



ENCENDIDO | IGNITON | ACCENSIONE | ALLUMAGE

PLATINO | POINT | PUNTINE | VIS PLATINÉES

REF	OEM
REC8M6001219	751007



CONDENSADORES CONDENSERS CONDENSATORE CONDENSEURS

REF	OEM
REC33662	755017



ROTORES ROTORS ROTORI DOIGT D'ALLUMEUR

REF
REC834975



BOBINAS DE ENCENDIDO IGNITION COIL BOBINE ACCENSIONE BOBINE D'ALLUMAGE

REF	
REC1463-9382	Resistencia externa. Utilizar con encendido convencional. External resistor. Use with conventional ignition Resistenza esterna. Utilizzare con accensione convenzionale Résistance externe. A utiliser avec un allumage conventionnel.

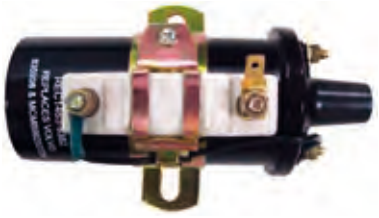

ALTERNADORES ALTERNATORS ALTERANATORE ALTERNATEUR

REF	OEM	12V	SERPENT.
REC575011	575011	12V 70A	✓



REF	OEM	12V
REC575010	575010	12V 70A



MOTORES DE ARRANQUE STARTERS MOTORINI AVVIAMENTO DÉMARREUR

REF	OEM	12V	9	GM & Ford
REC50-97499A2	573001	12V 1.4 kW	9	GM & Ford



REF	OEM	12V	9
REC50-808011A05		12V 1.4kw	9

Contrarrotación o montaje en campana
CCW Starter
Controrotante o montato nella campana
Contre-rotation ou montage sur capot



JUEGOS DE CABLES, ALTO RENDIMIENTO

Núcleo del cable de Kevlar de 8 mm antimagnético. Funda de silicona amarilla. Terminales bujías con muelle de acero inox. Terminal del distribuidor de cobre. Terminales bobina. Silicona resistente a altas temperaturas. Garantía de 5 años.

HD SPARK PLUG WIRE SET

Antimagnetic Kevlar core. Yellow silicone boot & jacket. SS snaplock. Brass distributor terminal. Coil terminals. High resistant silicone. 5 year warranty.

KIT CAVI CANDELE, ALTE PRESTAZIONI

Nucleo del cavo di Kevlar da 8 mm antimagnetico. Copertura di silicone gialla. Terminali candele con molle di acciaio inox. Terminale lato spinterogeno in rame. Terminale Bobine. Silicone resistente alle alte temperature. Garanzia di 5 anni.

KIT FAISCEAU DE BOUGIE

Noyau en Kevlar antimagnétique. Gaine en silicone jaune.Bornes de bougie d'allumage avec ressort en acier inoxydable. Terminal de distribution en laiton. Bornes de bobine. Silicone haute résistance. Garantie de 5 ans.

1	Camisa de silicona de 8 mm	8 mm silicone jacket	Rivestimento in silicone da 8 mm	Gaine silicone de 8mm
2	Látex resistente altas temperaturas	Heat resistant latex	Latex resistente alle alte temperature	Latex résistant à haute température
3	Acero inox	Stainless Steel	Acciaio inox	Acier inox
4	Núcleo de Kevlar	Kevlar core	Nucleo de Kevlar	Noyau de Kevlar
5	Capuchón de silicona	Silicone jacket	Rivestimento in silicone	Capuchon en silicone
6	Trenzado especial fibra de vidrio	Fiberglass braiding	Fibra di vetro	Tresse en fibre de verre
7	Terminal de acero inox	Stainless Steel terminal	Terminale di acciaio inox	Terminal en acier inox

	CYL	ARRANQUE IGNITION AVVIAMENTO DEMARRAGE CONVEN.	ELECT.	REF
181 3.0L	4	✓		REC15-401
181 3.0L	4		✓	REC15-405
250 (In-line 6)	6	✓		REC15-602
262 4.3L	6	✓		REC15-604
262 4.3L	6		✓	REC15-601
302, 351 5.0L-5.8L (Ford)	8	✓		REC15-801
350 5.7L	8	✓		REC15-801
350 5.7L	8		✓	MAG15-803
454 7.4L, 502 6.2L	8	✓		REC15-801
454 7.4L, 502 6.2L	8		✓	MAG15-803
454, 502 (Straight plug boot)	8		✓	MAG15-809
V8 Mallory Side Term. Cap	8	✓		REC15-806

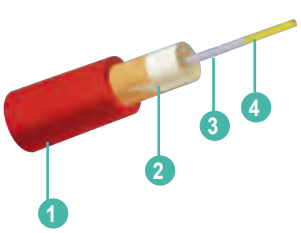

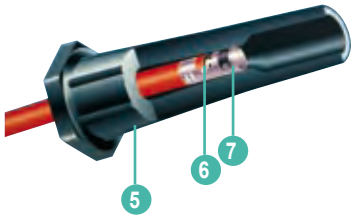

KOHLER

FILTRO — FILTER — FILTRO — FILTRE

FILTRO ACEITE — OIL FILTER — FILTRO OLIO — FILTRE D'HUILE

REF	OEM	
REC502900	279449	12.5CF, 15C, 16CF, 20C.



REF	OEM	
REC834337	359771	4EF, 5E, 6EF, 7.3E.



REF	OEM	
REC229678	229678	4CCFOZ, 4EFOZ, 5CCOZ, 5EOZ, 6.5EFOZ, 8EOZ.



FILTRO COMBUSTIBLE — FUEL FILTER — FILTRO BENZINA — FILTRE D'ESSENCE

REF	OEM	
REC252898	252898	11, 11.5, 13, 13.5, 14, 15, 15.5, 16, 17.5, 18.5, 19, 20, 23, 24 (CCF0Z, EF0Z, E0ZD)



TERMOSTATO — THERMOSTAT — TERMOSTATO — THERMOSTAT

REF	OEM	
REC23-3666		Variación 1: 33EF0Z, 33CF0Z,40CF0Z, 40E0Z, 40EF0Z, 50C0Z, 50CF0Z, 50E0Z, 55EF0Z, 65 C0Z, 65E0Z, 70EF0Z,80E0Z. 80EF0Z, 99E0Z, 100EF0Z, 125E0Z, 125EF0Z, 150E0Z



BOMBA AGUA — WATER PUMP — POMPA ACQUA — POMPE D'EAU

REF	OEM				
REC29350-1001	GM58527			CEF500100GX	6E0D 4.5EF0D



REF	OEM				
SHEG8001	132-0275	3/8"	3/8"	REC08000K	5-7 KW Diesel Generator



REF	OEM				
REC344085 SHEG907P	344085 344371	3/8"	3/8"	REC09000K	Ford 4T o 6.5 kw



REF	OEM				
RECGM46936 SHEG910P	GM46936	3/8" NPT	3/8" NPT	REC09000K	Ford



KOHLER

RECAMBIOS MARINOS

IMPULSORES — IMPELLER — GIRANTE — TURBINE

OEM	PALAS BLADES PALE PALES	SHERWOOD	CEF	RECMAR	A (mm)	B (mm)	C (mm)
229826	12	SHE09000K	CEF500165	REC09000K	15,9	62,2	22,4
229955 250872	6		CEF500129	REC22779-0001	12,75	50,8	22,1
359978	6	SHE08000K	CEF500190G	REC08000K	12,2	19	40
	12	SHE10077K	CEF500166	REC10077K	12,7	57	19,8
	12	SHE09959K	CEF500103T	REC3854286	16	62	31,5
	12	SHE10615K		REC10615K	15,9	65	41,2
252882				REC21213660			

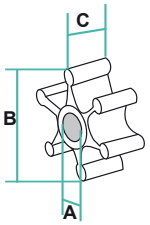



REC21213660



REC09000K



REC22779-0001



REC08000K



REC10077K



REC3854286



REC10615K

ÁNODOS — ANODES — ANODI — ANODES

REF	OEM
CME0	260085 267928



GENERADORES — GENERATORS — GENERATORI — GENERATEUR

			FILTRO COMB. FUEL FILTER FILTRO COMB. FILTRE ESSENCE		KIT TERMOSTATO THERMOSTAT KIT KIT TERMOSTATO KIT THERMOSTAT	FILTRO ACEITE OIL FILTER FILTRO OLIO FILTRE HUILE	ÁNODO ANODE ANODO ANODE
5 CCOZ 5EOZ	6.5 EFOZ			REC09000K (296899+) REC22779-0001 (-296898)		REC36918	CME0
8EOZ				REC09000K (296899+) REC22779-0001 (-296898)		REC36918	
8EFOZ				REC09000K (296899+) REC22779-0001 (-296898)		REC36918	CME0
8CCFOZ	9CCOZ 9EOZ 9EFOZ	10EOZ		REC09000K (296899+) REC22779-0001 (-296898)		REC229678	
11 CCFOZ			REC252898 (Var 2)	REC22779-0001		REC229678	
11.5 CCFOZ 11EFOZ 11.5EFOZ	13EOZ 13EFOZ 13.5 CCOZ		REC252898 (Var 2)	REC22779-0001			
14 CCOZ 14 EOZ			REC252898 (Var 2)	REC22779-0001			
15 CCFOZ			REC252898 (Var 3)	REC22779-0001			
15.5EOZ			REC252898 (Var 2)	REC22779-0001			
16EFOZ 17.5EFOZ	18.5 CCOZ 19EFOZ	20 CCFOZ 20EOZ	REC252898 (Var 3)	REC22779-0001			
20EFOZ	23EOZ	24 CCOZ 24EOZ	REC252898 (Var 3)	REC22779-0001			
6.5EFOZD 7 EFOZD	8EOZD 8.5 EFOZD	9 EOZD 9EFOZD		REC09000K			
10EOZD				REC09000K			
11EFOZD 11.5EFOZD	13EOZD 13EFOZD	14 EOZD 15.5 EOZD		REC22779-0001			
17 EFOZD 17.5EFOZD	19EFOZD	20EOZD 20EFOZD	REC252898 (Var 3), (Var 1)	REC22779-0001			
23EFOZ				REC09000K			
23EOZD			REC252898 (Var 3), (Var 1)	REC22779-0001			
23EFOZD				REC09000K			
24EOZD			REC252898 (Var 3), (Var 1)	REC22779-0001			
27EFOZ 27EFOZD	28EOZ 28EOZD	32EOZ 32EOZD		REC09000K			
33EFOZ				REC3841697			
33 CFOZ	40 CFOZ			REC3841697	REC23-3666		
40EOZ 40EFOZ				REC3841697			
50 COZ				REC3841697	REC23-3666		
50 CFOZ				REC3841697	REC23-3666		
50EOZ	55EFOZ			REC3841697	REC23-3666		
65 COZ				REC3841697	REC23-3666		

		FILTRO COMB. FUEL FILTER FILTRO COMB. FILTRE ESSENCE		KIT TERMOSTATO THERMOSTAT KIT KIT TERMOSTATO KIT THERMOSTAT	FILTRO ACEITE OIL FILTER FILTRO OLIO FILTRE HUILE	ÁNODO ANODE ANODO ANODE
65EOZ			REC3841697			
70EFOZ	80EOZ		REC3841697	REC23-3666		
80EFOZ	99EOZ		REC3841697			
100EFOZ				REC23-3666		
125EOZ 125EFOZ						
3.5 CFZ			REC22779-0001 (-296898)	23-3610		
4 CZ			REC22779-0001 (-296898)	23-3610		
4EF			REC08000K	23-3608	REC834337	CME0
5 CFZ			REC22779-0001 (-296898)	23-3610		
5ECD			REC08000K			
5E	6EF		REC08000K	23-3608	REC834337	CME0
6EFCD			REC08000K			
6.5 CZ			REC22779-0001 (-296898)	23-3610		
7.3E			REC08000K	23-3608		
7.3ECD			REC08000K			
8E		(GR4 Ver), (Var 2) Inline	REC09000K (296899+) REC22779-0001 (-296898)	23-3608		
9EFGD					REC834337	CME0
10E		(GR4 Ver), (Var 2) Inline	REC09000K (296899+) REC22779-0001 (-296898)	23-3608		
12.5E		(GR4 Ver), (Var 2) Inline	REC09000K (296899+) REC22779-0001 (-296898)	23-3608		
12.5CF			REC09000K (296899+) REC22779-0001 (-296898)	23-3608		
15C			REC09000K	23-3608		
15EG					REC502900	
16CF			REC09000K	23-3608		
17.5CF					REC502900	
20C			REC09000K	23-3608		

MAN

BOMBA AGUA — WATER PUMP — POMPA ACQUA — POMPE À D'EAU

REF	OEM					BOMBA PUMP POMPA POMPE
REC22040-0701S	65.00600.0016	57 mm	57 mm	JOH09-814B	MAN D2676	22040-0701S



IMPULSORES — IMPELLER — GIRANTE — TURBINE

OEM		PALAS BLADES PALE PALES	JOHNSON	CEF	RECMAR	A (mm)	B (mm)	C (mm)
51.06505.0127	D2862LR443	12	JOH09-842B					
51.06505.0103	D2866	12	JOH09-821B	CEF500162G		22,5	65,8	80
50.06506.0089		12	JOH09-814B	CEF500145T	REC875697	22,5	95	88,5
50.06506.0091	D2866	8	JOH09-1028B	CEF500106GT	REC3841697	14,29	65	50,2
51.06505.0106	1050, 1100, 1200, 1300, 1360, 1550 HP	12	JOH09-820B	CEF500186T		22,5	96,5	130

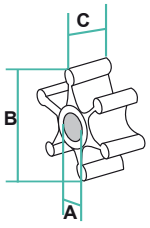



CEF500106GT
JOH09-821B



REC3841697
CEF500106GT
JOH09-1028B



REC875697
CEF500145T
JOH09-814B

MASE

BOMBA AGUA — WATER PUMP — POMPA ACQUA — POMPE D'EAU

REF	OEM			EJE SHAFT ASSE ARBRE	GENER.	BOMBA PUMP POMPA POMPE
REC10-24571-01	10-24571-01 20291	3/4"	3/4"	REC21213660 17 mm	12 KW SERIE	F5B-8



REF	OEM			EJE SHAFT ASSE ARBRE	GENER.	BOMBA PUMP POMPA POMPE
REC10-24570-01	10-24570-01 20639	3/8 BSP/ NPT		REC653-0001 12 mm	ISE.5/7.5	F4B-8



GENERADORES — GENERATORS — GENERATORI — GENERATEUR

		MOTOR ENGINE MOTORE MOTEUR	FILTRO | FILTER | FILTRO | FILTRE: aceite oil olio huile	comb. fuel comb. essence	aire air aria aire		ANODO ZN INTERCAM. ZN ANODE EXCHANGE ANODO ZN SCAMB. ANODE ZN ECHANG.: agua-aire water-air acqua-aria eau-air	agua water acqua eau	CORREA | BELT CINGHIA | COURROIE: Alter.	bomba pump pompa pompe	BOMBA | PUMP POMPA: agua water acqua eau	comb. fuel comb. essence	Solenoid	SENSOR SENSORE PRES. aceite oil olio huile	SENSOR CAPTEUR TEMP. escape exhaust scarico échapp.
IS															
3.5	2000+	YANMAR L70	MAS97536		MAS013432	JOH09-808B	TEN02070T			MAS70196 (-2008) MAS71008 (2009+)	REC10-24569-01	MAS31004			MAS30253
5.0	2000+	YANMARL 100	MAS97536		MAS013432	JOH09-808B	TEN02070T			MAS71008 (-2008) MAS71365 (2009+)	REC10-24569-01	MAS31004			MAS30253
6.1	2006 +	KUBOTA Z482	MAS912422	MAS912423	MAS014020	JOH09-810B	TEN02070T	MAS11885	MAS912163			MAS31004	MAS912168		MAS30253
6.5 TNE	2000-06	YANMAR 3TN74 A-MG	REC119305-35151	REC129470-55703	MAS014020	JOH09-810B	TEN02070T	MAS011943	MAS910207	MAS71183	REC10-24570-01	MAS31004		MAS92682	MAS30253
7 TNV	2006 +	YANMAR 3TNV76-GMG	REC119305-35151	MAS911450	MAS014020	JOH09-810B	TEN02070T	MAS11885	MAS912357	MAS71365	REC10-24570-01	MAS31004		MAS92682	MAS30253
8 TNE	2000-06	YANMAR 3TNE78 A-MG	REC129150-35153	REC129470-55703	MAS014020	JOH09-810B	TEN02070T	MAS011943	MAS910208	MAS71166	REC10-24570-01	MAS31004		MAS92682	MAS30253
9 TNE	2000-06		REC129150-35153	REC129470-55703		JOH09-810B	TEN02070T	MAS011943	MAS910141	MAS71166	REC10-24570-01	MAS31004		MAS92682	MAS30253
9 TNV	2006-21	3TNV82 A GMG	REC129150-35153	REC119802-55810	MAS014020	JOH09-810B	TEN02070T	MAS11885	MAS910141	MAS71166	REC10-24570-01	MAS31004		MAS92682	MAS30253
9.1 KUB	2006 +	KUBOTA D722 17HP	MAS912422	MAS912423	MAS025222	JOH09-810B	TEN02070T	MAS011943	MAS912163			MAS31004	MAS912168		MAS30253
11.2 TNV	2006-13	3TNV70 HGE	REC119305-35151	MAS911450	MAS014020	JOH09-810B	TEN02070T	MAS011943		MAS71270	REC10-24570-01	MAS31004		MAS92682	MAS30253
12 TNE	2000-06	YANMAR 3TNE88	REC129150-35153	MAS92892	MAS014020	JOH09-1027B	MAS80159 (-2003) MAS911730 (2004+)	TEN02053T	MAS910141	MAS71204	REC10-24571-01			MAS92682	MAS30253
12 TNV	2006 +	YANAMR 3TNV88 GGE	REC129150-35153	REC119802-55810	MAS014020	JOH09-1027B	MAS911730	TEN02053T	REC129612-42290E	MAS71204	REC10-24571-01	MAS31004		MAS92682	MAS30253
13.1 TNVT	2006-18		REC129150-35153	REC119802-55810			MAS911730								
16 TNE	2006 +	YANMAR 4TNE88 G1A	REC129150-35153	MAS92892	MAS014020	JOH09-1027B	MAS80159	TEN02053T	MAS910141	MAS71204	REC10-24571-01			MAS92682	MAS30253
16 TNV	2006 +	YANMAR 4TNV88 GGE	REC129150-35153	REC119802-55810	MAS014020	JOH09-1027B	MAS911730	TEN02053T	REC129612-42290E	MAS71204	REC10-24571-01	MAS31004		MAS92682	MAS30253
20.1 TNVT	2006-18	YANMAR 4TNV84T GMG	REC129150-35153	REC119802-55810			MAS911730								
22K	2017 +	KUBOTA V2403 BG	MAS913347	MAS913348	MAS014020	JOH09-812B	MAS911730	TEN01320T	MAS913354						
25 TNV	2006 +	YANMAR 4TNV98 GGE	REC129150-35153	REC119802-55810	MAS027318	JOH09-1027B	MAS911730	MAS018807	MAS912277	MAS71110	REC10-24571-01	MAS31004		MAS92682	MAS30253
25 TNE	2000-06	YANMAR 4TNE 94	REC129150-35153	MAS92958	MAS027318	JOH09-1027B			MAS910604	MAS71110					
MARINER															
45		PERKINS 1103A-33TG1				JOH09-1027B		MAS11885			REC10-24571-01				

IMPULSORES — IMPELLERS — GIRANTI — TURBINES

OEM		PALAS BLADES PALE PALES	JOHNSON	JABSCO	CEF	RECMAR	A (mm)	B (mm)	C (mm)
434014		6	JOH09-810B		CEF500101X	REC653-0001	12,17	50,8	22,1
434013	FK2,40E/HE 2,60H KLA L30 3.90	6	JOH09-808B		CEF500121GX	REC3586496	12	39,6	19,2
	FK3 2.45H2 2.5HE 2.60HE 3.75HE 3.90H/HE 4.110.H	10			CEF500146X		12,17	51,8	22
	3.100HE 3.110HE 4.110HE 4.150HE 4.180 4.190HE 4.200HE MB180 220 230	12	JOH09-1027B			REC21213660	14,29	57	31,6
	4.220HE 4.330TDI 4.440E 5.280HE 5.250TDI 5.300/T 6.280HE 6.570T 6.660E/LE	10		JAB17937-0001-P	CEF500114T	REC17937-0001	14,29	65	50,1
50.06506.0091	4.230 4.240 4.380 5.300	8	JOH09-1028B		CEF500106GT	REC3841697	14,29	65	50,2
50.06506.0089	1300,16	12	JOH09-814B		CEF500135	REC21730344	22,5	95	63,1
51.06506.0103			JOH09-821B						
51.06506.0106			JOH09-820B						

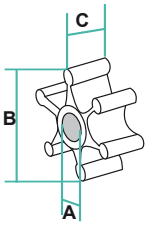


REC17937-0001


REC21730344


REC653-0001


REC21213660


REC3841697


REC3586496

ALTERNADORES — ALTERNATORS — ALTERANATORE — ALTERNATEUR

REF	OEM			
REC873770	48200932	12V 60A	RM841812	NK2.4ECO NK2.50HE NK3.100HE NK3.75HE NK4.150HE NK4.200HE NK4.220HE NK5.250TDI NK5.2800HE



Se suministra sin polea
It is supplied without pulley
Viene fornito senza puleggia
Ne comprend pas la poulie

FILTRO | FILTER | FILTRO | FILTRE

FILTRO COMBUSTIBLE | FUEL FILTER | FILTRO BENZINA | FILTRE D'ESSENCE

REF	OEM	
REC149-0428	149-0428	MDJA, MDJB, MDJC (Spec A-R) MDJE, MDJC (Spec. A)



REF	OEM		
REC149-2106	149-2106 A026K278	8,0DKD 10DKG	



REF	OEM		
REC1491758	1491758	20KW-MDL4W2423D MDLGWLG34D-L423D-L423 L423P-LG34W-25MDLG 45MDLG-30MDLG-L317DW 16MDL224-20MDL4-12MDL3	



REF	OEM		
REC1492250I	1492250	40DGCA-50DGCA 30MDGBA-35MDGCA 45MDGCA	BY-PASS I Filtro | Filter | Filtro | Filtre I



REF	OEM		
REC1492251II	1492251 II	40DGCA-50DGCA 30MDGBA-35MDGCA 45MDGCA	BY-PASS II Filtro | Filter | Filtro | Filtre II



REF	OEM		
REC1491754	1491754	50DDB-W9D	Cristal | Crystal | vetro | Verre



FILTRO ACEITE | OIL FILTER | FILTRO OLIO | FILTRE D'HUILE

REF	OEM		
REC1220602	1220602	L317DW 16MD224 20MDL4 12MDL3	Filtro corto | Small filter Filtro corto | Filtre court



REF	OEM	
REC1855835	1855835 185-5835	8,5KV-10KV MDKAA MDKAB MDKAV MDKBG MDKAW MDKAZ MDKAL MDKBK MDKBL MDKBM MDKBN



REF	OEM	
REC185-2133	185-2133	8.0DKD-10DKG



REF	OEM	
REC1220716712	122.0716.712	40DGCA-50DGCA 30MDGBA-35MDGCA 45MDGCA



REF	
REC35-06003	50DDB-W9D



REF	OEM	
REC1220550	122-0550	20KW-MDL4W2423D-MDLGWLG34D L423D-L423-L423P-LG34W-25MDLG 45MDLG-30MDLG-L317DW-16MDL224 20MDL4-12MDL3



REF	OEM	
REC1220810	1220810 122-0810	17,5 MDKAE MDKDB MDKBF MDKAD MDKAE MDKAF



REF	OEM	
REC1870014	187.0014	45MDGGA 55MDGGA



BOMBA ASPIRACIÓN AGUA MARINA — RAW MARINE WATER PUMP — POMPA ASPIRAZIONE ACQUA MARINA — POMPE À EAU DE MER

REF	OEM		
SHEG702	132-0358 132-0459	REC10077K	6.5 - 10kW



BOMBA AGUA — WATER PUMP — POMPA ACQUA — POMPE À EAU

REF	OEM				
SHEK75B	132-0275 135-0278	1"	1"	REC3854286	4 CYL



REF	OEM				
SHEL10B	1320278 132-0278	1 1/4"	1 1/4"	REC10615K	5 CYL MDL6 (30kW)



REF	OEM				
SHEG1010	132-0343 132-0347 132-0356 132-0413	1"	1"	REC10615K	10-25 KW Reemplaza | Replace | Sostituisce | Remplace: G1004, G1005, G1008



REF	OEM		
SHEG8002	132-0395 132-0430	REC08000K	Reemplaza | Replace | Sostituisce | Remplace: G1009



REF	OEM				
SHEG1012	132-0464	1 1/4"	1 1/4"	REC10615K	Reemplaza | Replace | Sostituisce | Remplace: G1009



new

REF	OEM					BOMBA PUMP POMPA POMPE	GENER.	
RECG8002	G8002 132-0430 132-0415 132-0395	3/8"	3/8"	REC08000K	QD5/5/6/7.5/8 KW	G8002	Cummins Onan MDK BH/J/W	129 mm



new

REF	OEM					BOMBA PUMP POMPA POMPE	GENER.
RECG702	G702 G701 132-0459 132-0379 132-0358	1"	1"	REC10077K	QD6.5/7/9/9.6/11.5/11/13.5 KW	G702	Cummins Onan MDK BK/L/M/N MDKDK/M/N



new

REF	OEM					BOMBA PUMP POMPA POMPE	GENER.
RECG1010	G1010 G1010-1 132-0413 132-0356 132-0347 132-0343 A029U129	1"	1"	REC10615K	QD 13.5/17/17.5/19/21.5 KW	G702	Cummins Onan MDK DP/R/V MDK BP/R



REF	OEM					BOMBA PUMP POMPA POMPE	GENER.
RECG1012	G1012 G1009 132-0464 A032Y747	1 1/4"	1 1/4"	REC10615K	QD 22.5/27/29 KW	G702	Cummins Onan MDK DS/T/U MDK BT/BU



KITS REPARACIÓN — REPAIR KITS — KIT RIPARAZIONE — KIT RÉPARATION

	NUM.		KIT MENOR KIT MINOR KIT MINOR KIT MINEUR	KIT MAYOR KIT MAJOR KIT MAGGIORE KIT MAJEUR
12MDJC-15 MDJF	132C115	SHE09959K		
4CYL DIESEL	132-0275	SHE09959K	SHE23979	SHE12665
5CYL DIESEL	132-0278	SHE10615K	SHE23976	SHE23977
5CYL DIESEL	132-0271	SHE09000K		
5CYL DIESEL	132-0343	SHE10615K		
5CYL DIESEL	132-0347	SHE10615K		
10-25Kw	132-0356	SHE10615K		
6.5-10Kw	132-0358	SHE10077K		
4.8Kw		SHE08000K		


SHE23979


SHE12665


SHE23976


SHE23977

IMPULSORES — IMPELLER — GIRANTE — TURBINE

OEM	PALAS BLADES PALE PALES	JABSCO	JOHNSON	SHERWOOD	CEF	RECMAR	A (mm)	B (mm)	C (mm)
08-21-1201 132-0162 131-0050	12	JAB12104-0001	JOH09-1027B		CEF500107T	REC21213660	14,29	57	31,6
132-0117 132-0317	12			SHE09959K	CEF500103T	REC3854286	15,9	62	31,7
132-0349 132-0348 132-0292	12			SHE10615K	CEF500120T	REC10615K	15,9	65,2	41,3
132-0375 132-0498	12			SHE10077K	CEF500166	REC10077K	12,8	56,6	19,8
132-0859 132B59	6		JOH09-806B		CEF500100GX	REC3586494	9,54	39,6	18,94
132-0415 132-0407	6			SHE08000K	CEF500190G	REC08000K	12,2	19	40

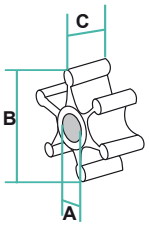


REC21213660


REC3854286


REC10615K


REC10077K


REC3586494


REC08000K

ÁNODOS — ANODES — ANODI — ANODES

		OEM		Ø	
TEN02030			8	10	30
TEN02031	TEN02031TP		9,5	13	26
TEN02032			M8	10	31
TEN02033			3/8 UNC	12	40
TEN01318T		130-4434			



MOTOR ARRANQUE — STARTER — MOTORINO AVVIAMENTO — DÉMARREUR

REF	OEM				GENER.
REC879194371	879194371 882481 889903 185-2166	3 CYL CW	12V 1.2 KW	9	8KW



GENERADORES — GENERATORS — GENERATORI — GENERATEUR

	FILTRO COMB. FUEL FILTER FILTRO COMB. FILTRE ESSENCE	KIT	FILTRO ACEITE OIL FILTER FILTRO OLIO FILTRE HUILE	ÁNODO ANODE ANODO ANODE
MDKAU	REC149-2106			
MDKAV MDKBG MDKAW (Spacesaver) MDKAZ	REC149-2106	REC10615K	REC1855835	TEN01318T
MDKBD MDKBE MDKBF MDKBD (w/ Isolated Ground) MDKBE (w/ Isolated Ground) MDKBF (w/ Isolated Ground)	REC149-2106	REC10615K	REC1220810	TEN01318T
MDKBH MDKBK MDKBL MDKBM MDKBN MDKBP MDKBR MDKBS MDKBV MDKBT MDKBU				TEN01318T
MDDCA MDDCB MDDCC MDDCF MDDCG MDDCD MDDCE MDDCH MDDCJ				CME2
MDJA MDJB MDJC	REC149-0428 (Spec A-R)			
MDJE MDJF	REC149-0428 (Spec A)			
MDKAD/E/F	REC149-2106		REC1220810	
MDKAL/A/B		REC10077K	REC1855835	

CODO ESCAPE | EXHAUST ELBOW | GOMITO SCARICO | COUDE D'ECHAPPEMENT

REF	OEM	
SED3092201		T6.354.4AM 220 HP



REF	OEM		
MAR345	3776F024	Perkins Prima Marine 50	REC888596





REF	OEM	
SED3092200		T6.354.4AM 220 HP



REF	OEM		
MAR906 RM861906	135616660	M20 M30 M35	REC861907





COLECTOR ESCAPE | EXHAUST MANIFOLD | COLLETTORI SCARICO | COLLECTEURS D'ECHAPPEMENT

REF	OEM	
BAPE-1-6354	89058	T6.354M - 160 HP



FILTRO | FILTER | FILTRO | FILTRE

FILTRO ACEITE | OIL FILTER | FILTRO OLIO | FILTRE D'HUILE

REF	OEM			
REC35-816168	2654407 2654347	4.154M 4.192 4A.203 P4.192 P4.192Y P4.203 4.203 4.236 4.236M 4A236	4.248 4.300 A4.300 6.247 6.354 6.354M H6.354 H6354M 6.354 T6.354M	HT6.354 HT6.354M 6.3544 T6.3544 ST6.3544 6.372 V8-510 AV-8-540 V8-605 AV8-640 TV8-640



FILTRO COMBUSTIBLE — FUEL FILTER — FILTRO BENZINA — FILTRE ESSENCE

REF	OEM			
REC3581078	2656017	4.154M 4.192 4A.203 P4.192 P4.192Y P4.203 4.203 4.236 4.236M 4A236	4.248 4.300 A4.300 6.247 6.354 6.354M H6.354 H6354M 6.354 T6.354M	HT6.354 HT6.354M 6.3544 T6.3544 ST6.3544 6.372 V8-510 AV-8-540 V8-605 AV8-640 TV8-640



FILTRO DECANTADOR DIESEL — COMPLETE DIESEL FILTER — FILTRO DECANTATORE DIESEL — FILTRE DECANTEUR DIESEL

REF		
REC1140639	REC3581078	50 l/h

RECMAR



REF		
REC120	RACR12	15 l/h



new



REF			
REC296TWIN	REC3581078	50 L/H	GS30432 (8mm) GS30433 (10 mm)

new



REF				CUBETA BOWL VASCHETTA SEAU
REC2656613	REC3581078	50 l/h	GS30432 (8mm) GS30433 (10 mm)	METAL.

BOMBA ASPIRACIÓN AGUA MARINA — RAW MARINE WATER PUMP — POMPA ASPIRAZIONE ACQUA MARINA — POMPE À EAU DE MER

REF	OEM		
REC29350-1001	M20	CEF500100GX	M20



BOMBA AGUA — WATER PUMP — POMPA ACQUA — POMPE D'EAU

REF	OEM			
SHEH5	NA005576	1"	1"	4-154 6-345D



REF	OEM		
SHEG65		3/4" NPT	3/4" NPT



REF	OEM			
REC09140	NA001175	1 1/4" NPT	1 1/4" NPT	4.107-4.154



ÁNODOS — ANODES — ANODI — ANODES

ANODO	KIT			Ø	
TEN02040			16 x 1,5	18	65
TEN02041			3/8 UNC	16	31
TEN02042			M6	10	20
	TEN02043T	1/2 BSPT	15,5 mm	16	50
	TEN02044T	1/2 BSPT	7/16" UNF	16	50
	TEN02000T	1/2 BSPT	7/16" UNF	16	54



IMPULSORES — IMPELLER — GIRANTE — TURBINE

OEM	PALAS BLADES PALE PALES	JOHNSON	JABSCO	SHERWOOD	CEF	RECMAR	A (mm)	B (mm)	C (mm)
24880272	6	JOH09-806B			CEF500100GX	REC3586494	9,54	39,6	18,94
24880194	6	JOH09-1026B			CEF500116GX	REC3593659	12,66	50,8	22,1
460027	9	JOH09-1029B			CEF500105T	REC836-0001	22,5	96	63,1
24880190 0460038	12	JOH09-1027B			CEF500107T	REC21213660	14,29	57	31,6
24880031 0460024	10		JAB17937-0001-P		CEF500114T	REC17937-0001	14,29	65	50,1
460027	12				CEF500145T	REC875697	22,5	95	88,5
NA900010 24880178	12			SHE09959K	CEF500103T	REC3854286	15,9	62	31,7
NA900012	12			SHE10615K	CEF500120T	REC10615K	15,9	65,2	41,3

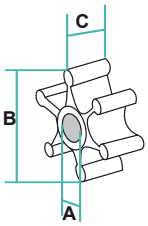


REC3586494


REC3593659


REC836-0001


REC21213660


REC875697


REC3854286


REC17937-0001


REC10615K

KITS REPARACIÓN — REPAIR KITS — KIT RIPARAZIONE — KIT RÉPARATION

BOMBA PUMP POMPA POMPE		KIT MENOR KIT MINOR KIT MINOR KIT MINEUR	KIT MAYOR KIT MAJOR KIT MAGGIORE KIT MAJEUR
	SHE10615K		SHE11068
SHEG65	SHE09959K		SHE12221
SHEH5	SHE09959K		
REC09140	REC21213660	JOH09-1027B	CEF500107T



CEF500107T



SHE12221



SHE11068



JOH09-1027B



SHE09959K

MOTOR ARRANQUE — STARTER — MOTORINO AVVIAMENTO — DÉMARREUR

REF	OEM		
REC21323043	185086600	12V 1.4 kw	9



REF	OEM		
REC21302969	185086610 185086620	12V 1.4 kw	9



PLEASURECRAFT

JUNTAS CULATA — CYLINDER HEAD GASKETS — GUARNIZIONE TESTATA — JOINT DE CULASSE

REF	OEM	
REC17030	6269577	GM 305, 350 CID

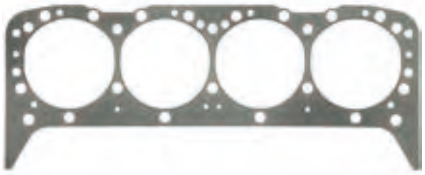

REF	OEM	
FEL17060	RM0032	Ford 302, 351 CID



ESCAPE — EXHAUST — SCARICO — ECHAPPEMENT

PROTECTOR SALIDA ESCAPE — EXHAUST PROTECTOR VALVE — PROTEZIONE SCARICO — PROTECTEUR ÉCHAPPEMENT

REF	
REC34765A2	3"
REC12644A1	4"
REC89260	5" necesita 2 cortes de 45º 5" requires two 45º cuts 5" richiede due tagli a 45º 5" nécessite 2 coupes à 45º
	6"



REC34765A2



REC12644A1



REC89260

COLECTOR ESCAPE | EXHAUST MANIFOLD | COLLETTORI SCARICO | COLLECTEURS D'ECHAPPEMENT

REF	OEM		KIT
HOT20996	R028001	V8 (Bloque pequeño | Small block | Blocco piccolo | Bloque petit)	HOT20996-MK



HOT20996-MK



CODO ESCAPE | EXHAUST ELBOW | GOMITO SCARICO | COUDE D'ECHAPPEMENT

REF	OEM			KIT
HOT20011	R029001	3 1/2"	V8 (Bloque pequeño | Small block | Blocco piccolo | Bloque petit)	HOT20899-MK



HOT20899-MK



HOT20011

JUNTAS COLECTOR ESCAPE | EXHAUST MANIFOLD GASKET | GUARNIZIONE COLLETTORE SCARICO | JOINT COLECTEUR D'ECHAPPEMENT

REF	
HOT27214-MK	Ford 305, 350 CID GM V8 (Bloque pequeño | Small block | Blocco piccolo | Bloque petit)



REF	OEM
REC3852455	RM0007



REF	OEM
REC27-33395	CHV-47-000



TAPÓN DE DRENAJE | DRAIN TAP | TAPPO DI DRENAGGIO | BOUCHON VIDANGE

REF
REC82745



BOMBA CIRCULACIÓN DE BLOQUE | BLOCK CIRCULATING PUMP | POMPA DI RICIRCOLO DI BLOCCO | POMPE D'EAU

REF	OEM	
REC3853796	RA057004	Ford 302, 351W



REF	OEM	
REC46-8M0113735	RA057019	Bidireccional. Bi-directional. Bidirezionale. Bidirectionnel.



REF	OEM	
REC46-8M0113734	RA057018	GM V6 & V8 (Bloque pequeño | Small block | Blocco piccolo | Bloque petit)



BOMBA ASPIRACIÓN AGUA MARINA | RAW MARINE WATER PUMP | POMPA ASPIRAZIONE ACQUA MARINA | POMPE À EAU DE MER

REF	OEM			
RECP1014 SHEP1014	40050	1 1/4"	SHE10615K	220, 270, 300, 350



REF	OEM			
SHEG21	RA57007	1"	SHE09959K	302 & 351



REF	OEM			
REC3860703	RA057026 RA057023	1 1/4"	CEF500104	5.7L

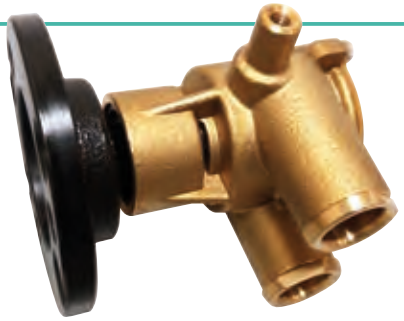

KITS REPARACIÓN | REPAIR KITS | KIT RIPARAZIONE | KIT RÉPARATION

REF	OEM	
SHE10615K	RP061017	GM V-Belt
SHE09959K	RP061015	Ford
JOH09-1027B		



JOH09-1027B



SHE10615K



SHE09959K

KITS TERMOSTATO | THERMOSTAT KITS | KIT TERMOSTATO | KIT TERMOSTAT

REF	OEM		
REC8M0089715	R026002E	FORD 302/351 CID	140°



REF	OEM	
REC97361	RP026002E	FORD 302/351 CID



BOMBA COMBUSTIBLE | FUEL PUMP | POMPA COMBUSTIBILE | POMPE CARBURANT

REF	OEM	
REC62092T	40050	FORD V8, 302

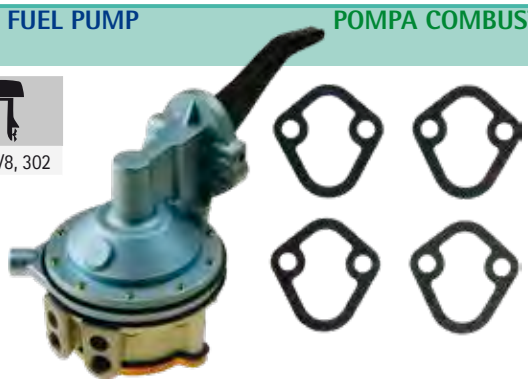

JUNTA BOMBA | PUMP GASKET | GUARNIZIONE POMPA | JOINT POMPE

REF	OEM
REC27-34213	3705042



FILTRO ACEITE | OIL FILTER | FILTRO OLIO | FILTRE D'HUILE

REF	OEM
REC35-06003	R077002



REF	OEM
REC35-06007	R077001



REF
REC3850559



REF
REC3517857



CARBURADOR | CARBURETOR | CARBURATORI | CABURATEURS

KIT | KIT | KIT | KIT

REF	OEM	
REC1396-4656	RN0116 RN0116-2	155, 165, 175, 185 302" (5.0L)

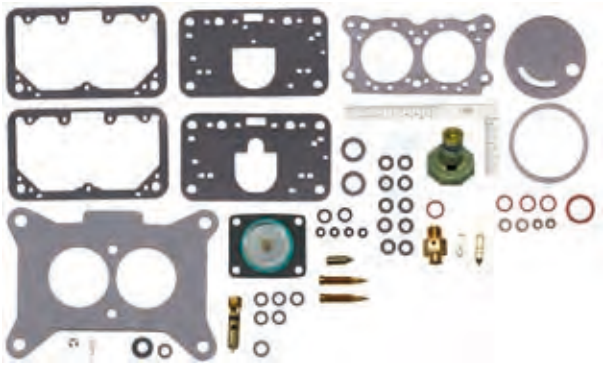

REF	OEM	
REC1396-5238	RN0118 RN0120	215, 255, 215 302" (5.0L) 351" (5.8L)



CHOKE TERMOSTATO | THERMOSTAT CHOKE | CHOKE TERMOSTATO | CHOKE TERMOSTAT

REF	OEM	
REC1396-4148	RN0116 RN0116-2	HOLLEY





SENSORES | SENSORS | SENSORI | CAPTEURS

PRESIÓN ACEITE | OIL PRESSURE | PRESSIONE OLIO | PRESSION D'HUILE

REF	OEM	
REC8M0068784	RO200001	80 PSI



SENSOR DE PICADO | KNOCK SENSOR | SENSORE DI ANTICIPO | CAPTEURS DE CLIQUETIS

REF	OEM
REC806612T	R020027

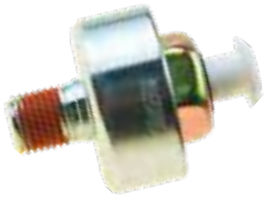

SENSOR ÁRBOL DE LEVAS | CAMSHAFT SENSOR | SENSORE ALBERO A CAMME | CAPTEUR ARBRE À CAMES

REF	OEM
REC892615002	R020035A



IAC

REF	OEM
REC3843751	R084003



ENCENDIDO | IGNITON | ACCENSIONE | ALLUMAGE

TAPAS DISTRIBUIDOR | DISTRIBUTOR CAPS | CALOTTE SPINTEROGENI | TÊTE D'ALLUMEUR

REF	OEM
REC392-9766	RA108003



REF	OEM
REC835702	RA108002



REF	OEM
REC392-9086T	



REF	OEM
REC982209	R08001



REF	OEM	
REC898253T22	RA108009	MP 5.0L, 5.7L (2002-05)



REF	OEM
REC393-4988	



PLATINO — POINT — PUNTINE — VIS PLATINÉES

REF	OEM
REC8M6001219	R114002



REF	OEM
REC391-5090	R114001 R114004



REF
REC71831



CONDENSADORES — CONDENSERS — CONDENSATORE — CONDENSEURS

REF	OEM
REC8M6001217	R115001



REF	OEM
REC8M6001249	



REF	OEM
REC33662	R115002



REF	OEM
REC64851	



ROTORES — ROTORS — ROTORI — DOIGTS D'ALLUMEUR

REF	OEM
REC3853801	R103004



REF	OEM
REC89825302	R103001



REF	OEM	
REC898253013	R103011	MP 5.0L, 5.7L (2002-05)



REF	OEM
REC834975	R103003



KITS | KIT | KIT | KIT

REF
REC392-6324Q1



REC3853801 + REC8M6001219 + REC8M6001249

REF
REC391-5090Q1



REC89825302 + REC391-5090 + REC8M6001217

DISTRIBUIDOR | DISTRIBUTOR | SPINTEROGENI | ALLUMEUR

REF	OEM	
REC392-6316	RA107001	MALLORY YL512CV FORD 302 CID V8



REF	
REC392-6330	MALLORY YL554CV FORD 351 CID V8

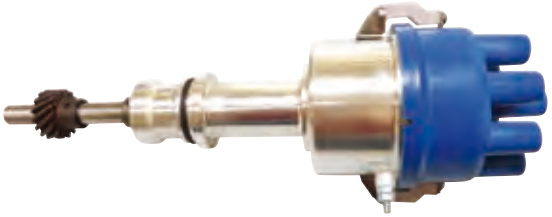

REF	
REC17177A1	MALLORY YL624MW GM V8



REF	OEM	
REC805222A1	RA107039E	V8 264, 454, 502



REF	
REC807964A1	V6



REF	
REC21622232	V8



KITS CONVERSIÓN ELECTRÓNICO | ELECTRONIC CONVERSION KIT | KIT CONVERSIONE ELETTRONICO | KIT CONVESION ELECTRONIQUE

REF	
REC26904	Mallory YL o YD con rotación reloj y contrareloj. 8 cyl. For most Mallory V8 distributors 8 cilindri Mallory YL o YD con rotazione oraria e antioraria Mallory YL ou YD avec rotation dans le sens des aiguilles d'une montre et dans le sens inverse. 8 cyl.



REF	
REC26905	Para la mayoría de distribuidores Prestolite V8 con tornillo en la tapa For most Prestolite V8 distributors with screw on cap Per al maggior parte degli spinterogeni Prestolite V8 con vite nella calotta. Pour la plupart des distributeurs Prestolite V8 avec couvercle à vis



REF	
REC18-5295	4 cyl Prestolite.



REF	
REC26901	Delco 6 cyl.



BOBINAS DE ENCENDIDO | IGNITION COIL | BOBINE ACCENSIONE | BOBINE D'ALLUMAGE

REF	OEM	
REC1463-9382	R117001	Resistencia externa. Utilizar con encendido convencional. External resistor. Use with conventional ignition Resistenza esterna. Utilizzare con accensione convenzionale Résistance externe. A utiliser avec un allumage conventionnel.

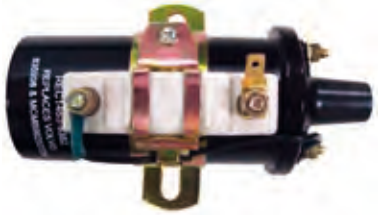

REF	
REC300-00879	No usa resistencia externa. Utilizar con encendido Prestolite. Use without external resistor & Prestolite ignition Non utilizza resistenza esterna. Utilizzare con spinterogeno Prestolite N'utilise pas de résistance externe. A utiliser avec l'allumage Prestolite.



REF	
REC3861267	R117012



JUEGOS DE CABLES, ALTO RENDIMIENTO | HD SPARK PLUG WIRE SET | KIT CAVI CANDELE, ALTE PRESTAZIONI | KIT FAISCEAU DE BOUGIE

	CYL	ARRANQUE IGNITION AVVIAMENTO DEMARRAGE CONVEN.	ELECT.	REF
262 CID (4.3L)	6	✓		REC15-604
V8 (Tapas de terminal | Top terminal caps | Coperchio terminali | Couverclea de terminal)	8	✓		REC15-801
V8 (Mallory lateral de terminall | Side terminal capsl | Coperchio laterali | Couvercles latéral de terminal)	8	✓		REC15-806
454 (7.4L)	8		✓	MAG15-809

MOTOR ARRANQUE STARTER MOTORINO AVVIAMENTO DÉMARREUR

REF	OEM			
REC50-97499A2	RA122008 9000888	12V 1.4 kw	9	GM & Ford



REF	OEM	
REC3854190	RA122001 987811 RK122014	302 5.0L Con 2 tornillos de anclaje 2 mounting holes Con 2 viti di supporto Avec 2 vis de support



REF	
RECRA122002	302 5.0L Contrarrotación. Counter clockwise starter Controrotante. Contra-rotation



REF	OEM			
REC50-808011A05	RA122009	12V 1.4 kw	9	305 5.0L Contrarrotación o montaje en campana CCW Starter Controrotante o montato nella campana Contra-rotation o montage dans une cloche



REF			
REC50-99418A2	12V	9	305 5.0L (1976-95)



REF
REC50-863007A1



ALTERNADORES ALTERNATORS ALTERNATORI ALTERNATEUR

REF	OEM				REG.
REC0985964		12V 63A	231 3.8L (1981-95) 305 5.0L (1976-95)	Simple Single Singola Simple	Autoexcitante Self-exciting Auto-eccitante Auto-excitant



REF	OEM		
REC69729	RA097002 RA097003 RA097006	12V 68A	Polea de transmisión Drive pulley Puleggia di azionamento Poulie de transmission



REF			REG.
REC3860769	12V 55A	Simple Single Singola Simple	Interno Internal Interno Interne



REF	OEM			REG.
REC575011	RA097007	12V 70A	Serpentina Groove Serpentine Serpentine 65 mm	Interno Internal Interno Interne



REF			REG.
REC3860171	12V 65A	Simple Single Singola Simple	Interno Internal Interno Interne



REF	OEM	
REC575010	RA097007	12V 70A



SOLENOIDES — SOLENOID — SOLENOIDE — SOLENOIDE

REF	OEM
REC3853839	R130001



POWER TRIM

LATIGUILLOS — HOSES — TUBI — TUYAU

REF	OEM
REC32-86036	R085035



ADAPTADOR GOMA — BUSHING — ADATTATORE IN GOMMA — ADAPTATEUR EN CAOUTCHOUC

REF	OEM
REC23-99291	R094020A

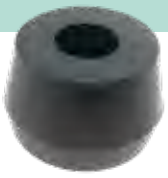

COMPONENTES DE COLA — GEARHOUSING COMPONENTS — COMPONENTI PIEDE — COMPOSANTS D'EMBASES

REF	OEM
REC12-835467Q01	R096116



REF	OEM
REC90301-ZW1-003	R017066



REF	OEM
REC897367	R096081



REF	OEM
REC90508-ZW1-003	R096117



RENAULT COUACH

FILTRO ACEITE — OIL FILTER — FILTRO OLIO — FILTRE D'HUILE

REF	
RECFF425	2.60-3.90



REF	
RECFF536	RCD16 RC75D



REF	
RECFF477	RC130D



REF	
RECFF346	RC100JET



REF	
REC3517857	4 CYL Sterndrive



REF	
RECFF143	RC140D-RC210D



REF	
RECFF436	RC75D



IMPULSORES — IMPELLER — GIRANTE — TURBINE

OEM	PALAS BLADES PALE PALES	JOHNSON	CEF	RECMAR	A (mm)	B (mm)	C (mm)
48300006 48300007	8		CEF500128		17	66	32
48300008	8		CEF500122T		17	65	48,6
48300037 48300055	6		CEF500127		10	50,8	22,1
RC320D	8	JOH09-1028B	CEF500106GT	REC3841697	14,29	65	50,2

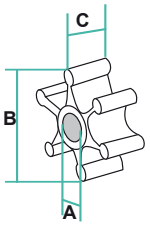


REC3841697


CEF500128


CEF500122T


CEF500127

ÁNODOS ANODES ANODI ANODES

		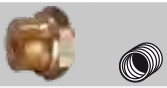		Ø	
TEN02090	12			15	22
		TEN02090T	18X15	15	22





REF
TEN01804



REF	KG	Ø eje	h (mm)	m (mm)	Ø (mm)
TEN01801	0,075 kg / 0.17 lb	22 - 25	36	16 x 2	27
TEN01802	0,145 kg / 0.32 lb	28 - 34	47	20 x 2,5	35
TEN01803	0,28 kg / 0.62 lb	40	48	28 x 2,5	41
TEN00490	0,31 kg / 0.68 lb	40	50	M20	40
TEN00491	0,3 kg / 0.66 lb	40	50	M24	40
TEN00492	0,295 kg / 0.65 lb	40	50	M27	40
TEN00493	0,265 kg / 0.58 lb	40	50	M30	40
TEN00494	0,31 kg / 0.68 lb	40	52	20 x 2	40
TEN00495	0,28 kg / 0.62 lb	40	50	26 x 2	40

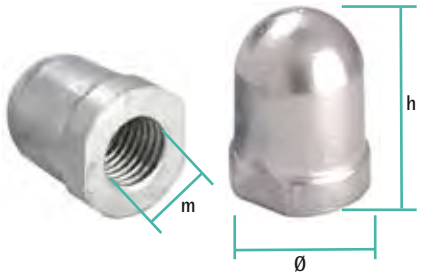

SOLE DIESEL

IMPULSORES IMPELLER GIRANTE TURBINE

OEM	PALAS BLADES PALE PALES		JOHNSON	CEF	RECMAR	A (mm)	B (mm)	C (mm)
347.11.008	8	SM-75 (72 HP) SM-90 (88 HP) HS-121 (115 HP) HS-270 (270 HP) 150 (165 HP	JOH09-1028B	CEF500106GT	REC3841697	14,29	65	50,2
351.11.008	12	MINI - 50	JOH09-1027B	CEF500107T	REC21213660	14,29	57	31,6
312.11.008	6	MINI - 11 / 17 / 23 MINI - 26 / 34 / 48		CEF500123X		12	52	25
321.11.008	6	MINI-11 (11 HP) MINI-17 (16 HP) MINI-26 (25 HP) MINI-34 (31 HP) MINI-48 (45 HP)		CEF500131X		10	39,6	19,2

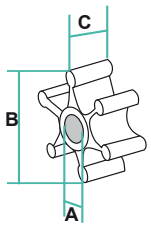


REC3841697


REC21213660


CEF500123X


CEF500131X

ÁNODOS ANODES ANODI ANODES

ANODO	OEM	KG (kg / lb)	Ø eje	h (mm)	Ø (mm)	Ø1 (mm)
TEN00400SOLE/1	40030092	0,120 / 0.26	30	39	24	32
TEN00400SOLE/2	50035092	0,20 / 0.44	35	46	26	37
TEN00400SOLE/3	40045092	0,40 / 0.88	45	60	36	47
TEN00400SOLE/4	40050092	0,56 / 1.23	50	70	45	55



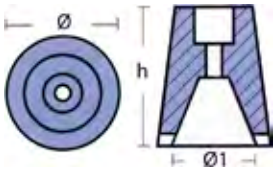

IMPULSORES — IMPELLERS — GIRANTI — TURBINE

OEM	PALAS BLADES PALE PALES	JOHNSON	CEF	RECMAR	A (mm)	B (mm)	C (mm)
IMP00301	8	JOH09-1028B	CEF500106GT	REC3841697	14,29	65	50,2
IMP00201	12	JOH09-1027B		REC21213660	14,29	57	31,6
IMP00101	6		CEF500129	REC22779-0001	12,75	50,8	22,1
IMP00701	10		CEF500146X		12,17	51,8	22
STM8061	6	JOH09-810B	CEF500101X	REC653-0001	12,17	50,8	22,1

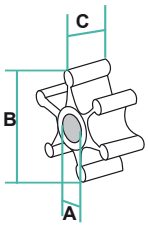


REC3841697


REC21213660


REC22779-0001


REC653-0001


CEF500146X

ÁNODOS — ANODES — ANODI — ANODES

REF	OEM	(kg / lb)	L mm	a mm	b mm	h mm	h1 mm	i mm	Ø1 mm	Ø2 mm
TEN03510	ZINK15SC	1,00 / 2.20	152	52	68	23	29	80	11	11 x 15
TEN03511	ZINK25SC	2,40 / 5.29	250	55	75	21	37	40	11	11 x 15


TEN03510


TEN03511

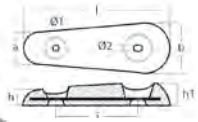

REF	OEM	(kg / lb)	Ø mm	h mm	i mm	Ø1 mm	Ø1 mm	Ø3 mm
TEN03507	BP1185 SET0150	0,154 / 0.34	56	15	40	44	15	5

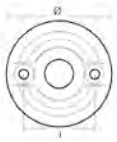

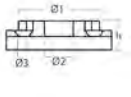



REF	OEM	(kg / lb)	Ø mm	a mm	b mm	h mm	Ø1 mm	Ø2 mm	Ø3 mm
TEN03512		0,650 / 1.43	75	25	7	47	8,5	42	55

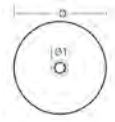





REF	OEM	(kg / lb)	Ø mm	a mm	h mm	h1 mm	Ø1 mm	Ø2 mm	Ø3 mm
TEN03500	BP195E SET151	0,480 / 1.06	60	24	17	42	6,5	30	12



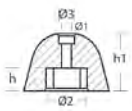



REF	OEM	(kg / lb)	Ø mm	c mm	h mm	h1 mm	Ø1 mm	Ø2 mm	Ø3 mm
TEN03508	BP1210 SET0152	0,380 / 0.84	50	24	41	17	10,5	6,5	33

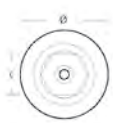

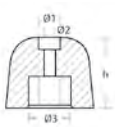



REF	OEM	(kg / lb)	Ø mm	l mm	a mm	b mm	h mm	H1 MM
TEN03502	BP129 SET153	0,065 / 0.14	6,5	41	20	17	24	17

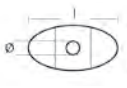

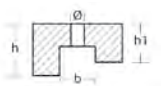



REF	OEM	(kg / lb)	Ø mm	a mm	h mm	Ø1 mm	Ø1 mm
TEN03509	BP195	0,385 / 0.85	53	28	47	11	1

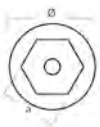





REF	OEM	(kg / lb)	Ø mm	h mm	Ø1 mm	Ø2 mm	Ø3 mm
TEN03503		1,050 / 2.31	79	45	11	46	34

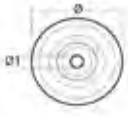

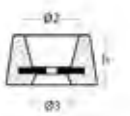



REF	OEM	(kg / lb)	Ø mm	h mm	i mm	Ø1 mm	Ø1 mm	Ø3 mm
TEN03505	BP1221 SET0148	0,040 / 0.09	38	10	29	32	17	4,5



REF	OEM	(kg / lb)	Ø mm	h mm	i mm	Ø1 mm	Ø1 mm	Ø3 mm
TEN03506	BP1126 SET0149	0,145 / 0.32	50	17	37	43	15	5,5

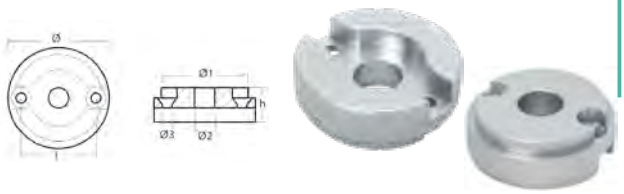

REF	OEM	(kg / lb)	Ø mm	h mm	Ø1 mm	Ø2 mm	Ø3 mm	
TEN00220	ZINK15C	1,000 / 2.20	148	58	27	80	31	11 x 15
TEN00221	ZINK25C	2,300 / 5.07	247	63	30	140	30	13 x 25
TEN00222		2,700 / 5.95	290	53	33	200	32	13 x 25
TEN00223	ZINK35C	4,500 / 9.92	350	68	36	200	38	13 x 25



WESTERBEKE

FILTRO ACEITE — OIL FILTER — FILTRO OLIO — FILTRE D'HUILE

REF	OEM		50 HZ	60 HZ
REC35595	35595	M753 / G / K /W /W2 M773 LWZ	3.0 BCG 4.8 BCG 7.0 BTG	4.0 BCG 6.5 BCG 9.0 BTG



REF	OEM	
REC36918	36918	4.5 5.0 7.0 7.2 8.0 8.5 9.6 10.0 11.0 12.5 15 B SERIES



KITS CARBURADOR — CARBURETOR KIT — KIT CARBURATORE — KIT CARBURATEUR

REF	OEM	
REC36450	36450	6.5, 6.4, 4.9, 8.0 (TWG) 8.5, 6.5, 12.5, 10.0, 15.0, 12.0 (BTG) 16.0, 20.0, 25.0 (BEG)



MOTOR ARRANQUE — STARTER — MOTORINO AVVIAMENTO — DÉMARREUR

REF	OEM			
REC50-97499A2	33486	12 1.4 kw	9	6.5, 8.0, 11.0 (TWG) 4 Cyl Gas



ALTERNADORES — ALTERNATORS — ALTERNATORI — ALTERNATEUR

REF	OEM	
ARC86050	30594	12V 50A



BOMBA AGUA — WATER PUMP — POMPA ACQUA — POMPE D'EAU

REF	OEM			
SHER10870G	11353	3/8"	3/8"	REC3854286



REF	OEM			
REC48080	48080 37431 33636	3/8" NPT	3/8" NPT	REC653-0001



REF	OEM				BOMBA PUMP POMPA POMPE	GENER.	
RECG908	G908 G903 302648 302837	1/2"	1/2"	REC09000K	G908	17.0/23EDE 13.5 / 17.0 EDE	M-35 35B/C M-40B M-25XPB M3-20B



REF	OEM				BOMBA PUMP POMPA POMPE	EJE SHAFT ASSE ARBRE	GENER. WESTERBEKE	GENER. FISHER PANDA
REC10-24569-01	10-24569-01 055624 042026	3/8"	3/8"	REC27000K	F35B-8	12mm	4.2-7.0 BCG/D MCGA 55B/C/D-4	Long body pump 109 mm

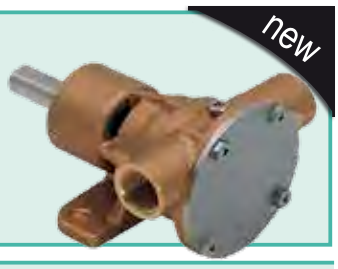

IMPULSORES — IMPELLER — GIRANTE — TURBINE

OEM	PALAS BLADES PALE PALES	SHERWOOD	JOHNSON	CEF	RECMAR	A (mm)	B (mm)	C (mm)
302875	12	SHE09000K		CEF500165	REC09000K	15,95	62,2	22,4
11418 11907 33104	12	SHE09959K		CEF500103T	REC3854286	15,9	62	31,7
13930	12	SHE10615K		CEF500120T	REC10615K	15,9	65,2	41,3
11764 33100	12	SHE10077K		CEF500166	REC10077K	12,8	56,6	19,8
48080 37431	6		JOH09-810B	CEF500101X	REC653-0001	12,17	50,8	22,1

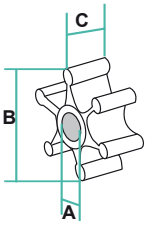


REC09000K


REC3854286


REC10615K


REC10077K


REC653-0001

ÁNODOS ANODES ANODI ANODES

REF	OEM
CME0	11885



GENERADORES GENERATORS GENERATORI GENERATEURS

	ALTERN.		KIT	TERMOST. KIT	FILTRO ACEITE OIL FILTER FILTRO OLIO FILTRE HUILE	ANODO ANODE ANODO ANODE	CARBUR. KIT
3.0 WMD(60Hz)/2.4 WMD(50Hz)		REC3586496	REC653-0001		REC36918	CME0	
3.8/4.2 BCDT(60Hz) / 3.5 BCDT(50Hz)		REC3586496	REC653-0001				
4.0 BCD(60Hz)			REC653-0001		REC36918		
4.4 BCD(60Hz)	ARC86050	REC3586496	REC653-0001	233650	REC36918	CME0	
4.4 WMD(60Hz) / 3.3 WMD(50Hz)	ARC86050			233650	REC36918	CME0	
5.0 BCD/BCDA/ BCDB(60Hz) 4.0 BCD/ BCDA/BCDB(50hz)			REC653-0001		REC36918	CME0	
5.0 BCDR(60Hz) / 4.0 BCDR(50Hz)			REC653-0001		REC36918		
6.0 BCD(60Hz) / 4.5 BCD(50Hz)	ARC86050		REC653-0001		REC36918	CME0	
7.6 BTD(60Hz) / 5.7 BTD(50Hz)			REC653-0001		REC36918		
7.7 WMD(60Hz) / 5.8 WMD(50Hz)	ARC86050		REC653-0001	233650	REC36918		
8.0 BTD(60Hz) / 6.0 BTD(50Hz)	ARC86050			233653	REC36918		
8.0 BTDA(60Hz) / 6.0 BTDA(50Hz)		REC653-0001 (- 03/2004)	REC653-0001		REC36918		
8.0 BCDT(60Hz) / 7.0 BCDT(50Hz)			REC653-0001		REC36918	CME0	
8.0 WMD(60Hz) / 6.0 WMD(50Hz)	ARC86050		REC653-0001	233650	REC36918		
10.0 BTD(60Hz) / 7.5 BTD(50Hz)	ARC86050		REC653-0001	233653	REC36918	CME0	
10.0 BTDA(60Hz) / 7.5 BTDA(50Hz)			REC653-0001		REC36918		
11.0 BTD(60Hz) / 8.3 BTD(50Hz)	ARC86050		REC653-0001	233653			
11.0 WMD(60Hz) / 8.3 WMD(50Hz)			REC653-0001	233650	REC36918	CME0	
12.5 BTD(60Hz) / 9.4 BTD(50Hz)	ARC86050		REC653-0001	233653			
12.5 BTDA(60Hz) / 9.4 BTDA(50Hz)	ARC86050		REC653-0001	233653			
12.5 BTDB(60Hz) / 9.4 BTDB(50Hz)					REC36918		
12.5 WMD(60Hz) / 9.4 WMD(50Hz)	ARC86050		REC3854286	233650			
12.6 BTD(60Hz) / 10.4 BTD(50Hz)			REC3854286	233653	REC36918	CME0	
15.0 BTD(60Hz) / 12.0 BTD(50Hz)	ARC86050		REC3854286	233658			
15.0 BTDA(60Hz) / 12.0 BTDA(50Hz)			REC653-0001	233660			
15.0 BTDB(60Hz) / 12.0 BTDB(50Hz)			REC3854286	233660			
15.0 BTDC(60Hz) / 12.0 BTDC(50Hz)			REC3854286		REC36918		
15.0 WTA(60Hz) / 12.0 WTA (50Hz)			REC3854286	233660			
20.0 BED(60Hz) / 16.0 BED(50Hz)			REC10077K	233660			
20.0 BEDA(60Hz) / 16.0 BEDA(50Hz)			REC3854286	233660			
20.0 WTA(60Hz) / 16.0 WTA(50Hz)		REC10077K	REC3854286	233660			
25.0 BED(60Hz) / 20.0 BED(50Hz)			REC3854286	233660			
25.0 WTA(60Hz) / 20.0 WTA(50Hz)			REC3854286	233660			
32.0 BED(60Hz) / 25.0 BED(50Hz)			REC3854286				
32.0 BEDA(60Hz) / 25.0 BEDA(50Hz)			REC3854286				
4.0 BCG(60Hz)/3.0 BCG(50Hz)		REC3586496		233651	REC35595	CME0	
4.5 BCG(60Hz)/3.75 BCG(50Hz)		REC3586496		233659	REC36918	CME0	
4.5 BCGB(60Hz)/3.75 BCGB(50Hz)		REC3586496	REC3586496	233654	REC36918	CME0	
4.5 BCGTC(60Hz)/3.75 BCGTC(50Hz)		REC3586496	REC3586496	233654	REC36918	CME0	
4.5 BCGTE(60Hz) / 3.75 BCGTE(50Hz)					REC36918		
5.0 BCG(60Hz)/4.2 BCG(50HZ)		REC3586496	REC10077K	233655	REC36918	CME0	
5.0 BCGA(60Hz)/5.2 BCGA(50Hz)		REC3586496		233655	REC36918	CME0	
6.5 BCG(60Hz)/4.8 BCG(50Hz)		REC3586496		233651	REC35595	CME0	
6.5 TWG(60Hz)/4.9 TWG(50Hz)		REC10077K		233652	REC36918	CME0	REC36450
7.0 BCG(60Hz)/5.0 BCG(50Hz)		REC3586496	REC3586496	233659	REC36918	CME0	
7.0 BCGA(60Hz)/5.0 BCGA(50Hz)		REC3586496	REC3586496	233659	REC36918	CME0	
7.0 BCGB(60Hz)/6.0 BCGB(50Hz)		REC3586496		233654	REC36918	CME0	
7.0 BCGC(60Hz)/5.9 BCGC(50Hz)		REC3586496	REC3586496	233655	REC36918	CME0	
7.0 BCGD(60Hz) / 5.8 BCGD(50Hz)		REC3586496	REC10077K		REC36918	CME0	
7.2 BCGTC(60Hz)/6.0 BCGTC(50Hz)		REC3586496	REC10077K	233654	REC36918	CME0	
8.0 BEG(60Hz)/6.4 BEG(50Hz)		REC3586496	REC10077K	233656	REC36918	CME0	
8.0 TWG(60Hz)/6.4 TWG(50Hz)		REC10077K		233651	REC36918	CME0	REC36450
8.5 BTG(60Hz)/6.5 BTG(50Hz)		REC10077K		233652	REC36918	CME0	REC36450
8.5 BTGA(60Hz) / 6.8 BTGA(50Hz)		REC10077K	REC3586496		REC36918	CME0	REC36450

	ALTERN.		KIT	TERMOST. KIT	FILTRO ACEITE OIL FILTER FILTRO OLIO FILTRE HUILE	ANODO ANODE ANODO ANODE	CARBUR. KIT
9.0 BTG(60Hz)/7.0 BTG(50Hz)		REC3586496	REC10077K	233651	REC35595	CME0	
9.6 BCGTC(60Hz)/8.0 BCGTC(50Hz)		REC3586496	REC3586496	233654	REC36918	CME0	
10.0 BEG(60Hz)/8.0 BEG(50Hz)		REC3586496	REC10077K	233656	REC36918	CME0	
11.0 TWG(60Hz)/8.5 TWG(50Hz)		REC10077K	REC3586496	233651	REC36918	CME0	
12.5 BEG(60Hz)/10.0 BEG(50Hz)		REC3586496	REC10077K	233656	REC36918	CME0	
12.5 BTG(60Hz)/10.0 BTG(50Hz)		REC10077K	REC3854286	233652	REC36918	CME0	REC36450
15.0 BEG(60Hz)/12.0 BEG(50Hz)		REC3586496	REC3854286	233656	REC36918	CME0	
15.0 BTG/A(60Hz)/12.0 BTG/A(50Hz)		REC10077K	REC3586496	233652	REC36918	CME0	REC36450
20.0 BEG(60Hz)/16.0 BEG(50Hz)			REC3586496	233661	REC36918	CME0	REC36450
25.0 BEG(60Hz)/20.0 BEG(50Hz)			REC3586496	233661	REC36918	CME0	REC36450
5.0 SBCG(60Hz) / 4.0 SBCG(50Hz)		REC3586496	REC3586496	233655	REC36918	CME0	
6.5 SBCG(60Hz) / 5.4 SBCG(50Hz)		REC3586496	REC3586496	233655	REC36918	CME0	
8.0 SBEG(60Hz) / 6.4 SBEG(50Hz)		REC3586496	REC3586496	233657	REC36918	CME0	
10.0 SBEG(60Hz) / 8.0 SBEG(50Hz)		REC3586496		233657	REC36918	CME0	
12.5 SBEG(60Hz) / 10.0 SBEG(50Hz)		REC3586496		233657	REC36918	CME0	
14.0 SBEG(60Hz) / 11.6 SBEG(50Hz)		REC3586496	REC3854286	233657	REC36918	CME0	
18.0 SBEG			REC3854286		REC36918		
18.0 SBEGA			REC3854286		REC36918		
20.0 SBEG(60Hz) / 16.0 SBEG(50Hz)			REC3854286	233662	REC36918	CME0	
20.0 SBEGA(60Hz) / 16.0 SBEG(50Hz)				233662	REC36918	CME0	
22.5 SBEG(60Hz) / 18.7 SBEG(50Hz)				233662	REC36918	CME0	
22.5 SBEGA(60Hz) / 18.7 SBEGA(50Hz)				233662	REC36918	CME0	
5.5 EDC(60Hz) / 5.0 EDC(50Hz)					REC36918	CME0	

BOMBA AGUA | WATER PUMP | POMPA ACQUA | POMPE D'EAU

REF	RECMAR			
SHEG702	RECG702	1"	1"	SHE10077K



REF			KIT MENOR KIT MINOR KIT MINOR KIT MINEUR	KIT MAYOR KIT MAJOR KIT MAGGIORE KIT MAJEUR
SHEG155	1 1/2"	1 1/2"	SHE15000K	SHE23980	SHE23981



REF	RECMAR			
SHEG8002	RECG8002	3/8" NPT	3/8" NPT	SHE08000K



REF			KIT MENOR KIT MINOR KIT MINOR KIT MINEUR	KIT MAYOR KIT MAJOR KIT MAGGIORE KIT MAJEUR
SHEG151	1 1/2"	1 1/2"	SHE15000K	SHE23980	SHE23981



REF	RECMAR				KIT MENOR KIT MINOR KIT MINOR KIT MINEUR
SHEP1016	REC8M0148530	1 1/2"	1 1/2"	SHE10615K	SHE23976



REF				KIT MAYOR KIT MAJOR KIT MAGGIORE KIT MAJEUR
SHEE35	1"	1"	SHE10615K	SHE11068



REF	RECMAR				KIT MENOR KIT MINOR KIT MINOR KIT MINEUR	KIT MAYOR KIT MAJOR KIT MAGGIORE KIT MAJEUR
SHEP1716C	RECP1716C	2"	1 3/4"	SHE17000K	SHE25124	SHE25122
SHEP1722C	RECP1722C					



SHEP1716C



SHEP1722C

REF		KIT MENOR KIT MINOR KIT MINOR KIT MINEUR	KIT MAYOR KIT MAJOR KIT MAGGIORE KIT MAJEUR
SHEP1727C SHEP1730C	SHE17000K	SHE25124	SHE25122

Codos con brida
Flanged Elbows
Gomiti con fascetta
Coude avec collier



REF			KIT MENOR KIT MINOR KIT MINOR KIT MINEUR	KIT MAYOR KIT MAJOR KIT MAGGIORE KIT MAJEUR
SHEP176X	1 1/2"	1 3/4"	SHE17000K	SHE23973	SHE23975



REF				KIT MENOR KIT MINOR KIT MINOR KIT MINEUR	KIT MAYOR KIT MAJOR KIT MAGGIORE KIT MAJEUR
SHEG9901	1 1/4"	1"	SHE09959K	SHE23979	SHE12665

Codos con brida
Flanged Elbows
Gomiti con fascetta
Coude avec collier



REF		KIT MENOR KIT MINOR KIT MINOR KIT MINEUR	KIT MAYOR KIT MAJOR KIT MAGGIORE KIT MAJEUR
SHEP1710C	SHE17000K	SHE25123	SHE25121



REF				KIT MENOR KIT MINOR KIT MINOR KIT MINEUR	KIT MAYOR KIT MAJOR KIT MAGGIORE KIT MAJEUR
SHEG9903	1 1/4"	1"	SHE09959K	SHE23979	SHE12665

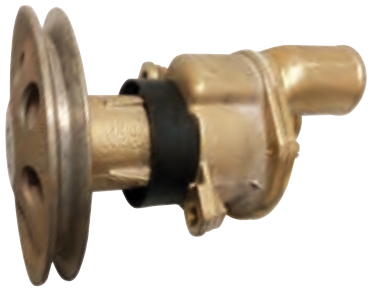

REF			KIT MAYOR KIT MAJOR KIT MAGGIORE KIT MAJEUR
SHEG2902X	3 3/4"	3 3/4"	SHE29000K	SHE25147



REF				KIT MENOR KIT MINOR KIT MINOR KIT MINEUR	KIT MAYOR KIT MAJOR KIT MAGGIORE KIT MAJEUR
SHEG21	1"	1"	SHE09959K	SHE23979	SHE12665



REF			KIT MENOR KIT MINOR KIT MINOR KIT MINEUR	KIT MAYOR KIT MAJOR KIT MAGGIORE KIT MAJEUR
SHEP1732C	SHE17000K	SHE25123	SHE25121



REF	RECMAR			KIT MENOR KIT MINOR KIT MINOR KIT MINEUR	KIT MAYOR KIT MAJOR KIT MAGGIORE KIT MAJEUR
SHEP1014	RECP1014	1 1/4"	1 1/4"	SHE10615K	SHE23976	SHE25029



REF				KIT MENOR KIT MINOR KIT MINOR KIT MINEUR	KIT MAYOR KIT MAJOR KIT MAGGIORE KIT MAJEUR
SHEM71	1 1/4"	1 1/4"	SHE10615K	SHE23976	SHE23977



REF				KIT MENOR KIT MINOR KIT MINOR KIT MINEUR	KIT MAYOR KIT MAJOR KIT MAGGIORE KIT MAJEUR
SHEGC1 SHEGC5	1 1/2"	1 1/2"	SHE15000K	SHE23980	SHE23981



REF			KIT MENOR KIT MINOR KIT MINOR KIT MINEUR	KIT MAYOR KIT MAJOR KIT MAGGIORE KIT MAJEUR
SHEP2708X	SHE27000K	SHE25125	SHE25126	



REF			KIT MENOR KIT MINOR KIT MINOR KIT MINEUR	KIT MAYOR KIT MAJOR KIT MAGGIORE KIT MAJEUR
SHEG2603X	SHE26000K	SHE24841	SHE24842	

Codos no incluidos
Elbows not included
Gomito non incluso
Ne comprend pas les coudes



REF			KIT MENOR KIT MINOR KIT MINOR KIT MINEUR	KIT MAYOR KIT MAJOR KIT MAGGIORE KIT MAJEUR
SHEG2903X	SHE29000K	SHE25044	SHE25045	

Codos no incluidos
Elbows not included
Gomito non incluso
Ne comprend pas les coudes



REF			KIT MAYOR KIT MAJOR KIT MAGGIORE KIT MAJEUR
SHEG65	3/4" NPT	3/4" NPT	SHE09959K	SHE12221



REF			
SHEH5	1"	1"	SHE09959K



REF			KIT MENOR KIT MINOR KIT MINOR KIT MINEUR	KIT MAYOR KIT MAJOR KIT MAGGIORE KIT MAJEUR
SHEK75B	1"	1"	SHE09959K	SHE23979	SHE12665



REF				KIT MENOR KIT MINOR KIT MINOR KIT MINEUR	KIT MAYOR KIT MAJOR KIT MAGGIORE KIT MAJEUR
SHEL10B	1 1/4"	1 1/4"	SHE10615K	SHE23976	SHE23977



REF	RECMAR			
SHEG1010	RECG1010	1"	1"	SHE10615K



REF			KIT MAYOR KIT MAJOR KIT MAGGIORE KIT MAJEUR
SHER10870G	3/4" NPT	3/4" NPT	SHE09959K SHE12937



REF			KIT MENOR KIT MINOR KIT MINOR KIT MINEUR	KIT MAYOR KIT MAJOR KIT MAGGIORE KIT MAJEUR
SHEG907P	3/8" NPT	3/8" NPT	SHE09000K SHE25195	SHE25196



REF			
SHEG8001	3/4" NPT	3/4" NPT	SHE08000K



REF			
SHEG910P	3/8" NPT	3/8" NPT	SHE09000K

Ford



GUÍA BOMBAS — PUMP GUIDE — GUIDA POMPE — GUIDE POMPE

	OEM	BOMBA PUMP POMPA POMPE				KIT MENOR KIT MINOR KIT MINOR KIT MINEUR	KIT MAYOR KIT MAJOR KIT MAGGIORE KIT MAJEUR		REEMPLAZA REPLACES SOSTITUISCE REMPLACE	KIT RETEN SEAL KIT KIT PARAOLIO KIT JOINT HUILE		KIT EJE SHAFT KIT KIT ASSE KIT ARBRE
Caterpillar												
3208	9Y1304	P171	40 mm	40 mm	17000K	23973	23975	Obsol.	P176X	15955	(2) 15951	
3208	7E4115	P176-02	38,1 mm	40 mm	17000K	23973	23975	Blindada Proprietary Blindata Blindée	P176X	23799	(2) 15951	
3116	7E3268	P172	40 mm	40 mm	17000K	23973	23975	Obsol.	P1710C	15955 15950	(2) 15951	
3116	4P7168	P1710-02			17000K	23973	23975		P1710C	23799 21776	(2) 15951	
3126	113-1109	P1726	Brida Clamp Fascetta Collier	Brida Clamp Fascetta Collier	17000K	23973	23975		P1726C	15955 21776	(2) 15951	
3126	152-8392	P1726TC-02			17000K				P1726TCX	23799 21776	(2) 15951	
3126	170-6116	P1732-02			17000K	23973	23975	Blindada Proprietary Blindata Blindée	P1732C	23799 21776	(2) 15951	
3176	123-0500	G1805	63,5 mm	50,8 mm	18000K	24023	24024			19878 19869		24000
3196	123-0471	G1807	63,5 mm	50,8 mm	18000K	24023	24024	Blindada		19878 19869		24001
3196	197-1328	G18071-01	63,5 mm	50,8 mm	18000K	24023	24024			23837 19869		24001
3406C	201-0956	G18061-01	63,5 mm	63,5 mm	18000K	24004	24006			23837 19869		24001
3406E	196-8895	G18081-01	95 mm	95 mm	18000K	24004	24007			23837 23045		24002
Chrysler Marine												
318 & 360	4142878	G7	31,8 mm	31, mm	10615K	23976	23977	Obsol.		12859	(2) 23448	
318 & 360	4142878	G7B	31,8 mm	31,8 mm	10615K	23976	23977	Bomba SHE SHE pump Pompa SHE Pompe SHE		12859	(2) 23448	
M273X, LM318X	2847630	D60	25,4 mm	25,4 mm	(2)09959K	10656	12300			10927	4257	
M273X LM318X	2847631	D65	25,4 mm	25,4 mm	(2) 09959K	10656	12300		D60	10927	4257	
LM318-X LM340-X	2846428	C-03			10615K	10999	11068		G7B	1092	4257	
LM318-X LM340-X	3675763	G5	31,8 mm	31,8 mm	10615K	23976	23977		G7B	12859	(2) 23448	
LM318-X LM340-X	3745511	G5-1	31,8 mm	31,8 mm	10615K	23976	23977	Obsol.	G7B	12859	(2) 23448	
LM318-X LM340-X	3619030	F10	31,8 mm	31,8 mm	10615K	10999	11068		G50	10927	4257	
LM318-X LM340-X	3619212	G50	31,8 mm	31,8 mm	10615K	23976	23977			12859	(2) 23448	

	OEM	BOMBA PUMP POMPA POMPE			KIT MENOR KIT MINOR KIT MINOR KIT MINEUR	KIT MAYOR KIT MAJOR KIT MAGGIORE KIT MAJEUR		REEMPLAZA REPLACES SOSTITUISCE REMPLACE	KIT RETEN SEAL KIT KIT PARAOLIO KIT JOINT HUILE		KIT EJE SHAFT KIT KIT ASSE KIT ARBRE
Crusader (Dearborn)											
220 270 300 350	97179	E35	25,4 NPT	25,4 NPT	10615K	10999	11068	Bomba SHE SHE pump Pompa SHE Pompe SHE		10927	4257	
Interceptor		F15	19,1 NPT	19,1 NPT	09959K				R50G	10927	4257	
220 270		S11040G	25,4 NPT	25,4 NPT	10615K	10999	11068	Obsol.	E35	10927	4257	
300 350		B04	25,4 NPT	25,4 NPT	10615K	10999	11068		E35	10927	4257	
220 270 300 350	40050	P101	31,8 mm	31,8 mm	10615K	19301	19300	Blindada Proprietary Blindata Blindée		12859	(2) 23448	
Cummins												
6B 250 HP 4B CEPC	3920298	GC4	38,1mm	38,1 mm	15000K	23980	23981	Obsol.	GC5	12859 10514	(2) 23448	
6B 250 HP 4B CEPC	3927684	GC5-01	38,1 mm	38,1 mm	15000K	23980	23981	Blindada Proprietary Blindata Blindée	GC5	12859 10514	(2) 23448	
4B 250 HP	3349340	G1503-01	38,1 mm	38,1 mm	15000K	23980	23256		G1503	12859 12966	(2) 23448	
6B	3919899	P1712	40 mm	40 mm	17000K	23972	23974	Obsol.	P1716C	15955 19674	(2) 15951	
6B	3922590	P1716B-01	50,8 mm	40 mm	17000K	23972	23974	Blindada Proprietary Blindata Blindée	P1716	15955 19674	(2) 15951	
6C,6B 270-450 HP	3912139	P173	40 mm	40 mm	17000K	23972	23974	Obsol.	P1722C	15955 19674	(2) 15951	
6C	3922589	P1722B-01	50,8 mm	40 mm	17000K	23972	23974	Blindada Proprietary Blindata Blindée	P1722C	15955 19674	(2) 15951	
6C,6B 270-450 HP	3897194	P1727FB-01			17000K	23972	23974		P1727C	15955 19674	(2) 15951	
6C,6B 270-450 HP	3866493	P1730F-01	Brida Clamp Fascetta Collier	Brida Clamp Fascetta Collier	17000K	23972	23974	Blindada Proprietary Blindata Blindée Blindada	P1730C	15955 19674	(2) 15951	
6C	4003526	P1731F-01			17000K	23972	23974		P1730C	15955 19674	(2) 15951	
QSM11	3349392	G1810-01			18000K	24005	24008		G1810	23512 19869		24003
Kohler												
Ford	344089	G907P-01	9,5 NPT	9,5 NPT	09000K			Bomba SHE SHE pump Pompa SHE Pompe SHE	G907P	22546	(2) 23448	
4-6.5 KW Gas	344371	G907 -01	9,5 NPT	9,5 NPT	09000K				G907P	22546	(2) 23448	
5-7 KW Diesel	359341	GP8001	9,5 NPT	9,5 NPT	08000K					23459	(2) 23323	
Mercruiser												
7.3 Diesel	L/270	G151	38,1 mm	38,1 mm	15000K	23980	23981	Bomba SHE SHE pump Pompa SHE Pompe SHE		12859	(2) 23448	
7.3 Diesel	L/270	G155	38,1 mm	38,1 mm	15000K	23980	23981			12859	(2) 23448	
Onan												
4 Cil Diesel	132-0275	K75	25,4 mm	25,4 mm	09959K	23979	12665	Obsol.	K75B	12859	(2) 23448	
4 Cil Diesel	132-0276	K75B	25,4 mm	25,4 mm	09959K	23979	12665	Bomba SHE SHE pump Pompa SHE Pompe SHE		12859	(2) 23448	
5 Cil Diesel	132-0278	L10	31,8 mm	31,8 mm	10615K	23976	23977	Obsol.	L10B	12859	(2) 23448	
5 Cil Diesel	132-0278	L10B	31,8 mm	31,8 mm	10615K	23976	23977	Bomba SHE SHE pump Pompa SHE Pompe SHE		12859	(2) 23448	
5 Cil Diesel	132-0343	G1004	25,4 mm	25,4 mm	10615K	10615K	22014	Obsol.	G1006	21208, 21209	(2) 23448	
5 Cil Diesel	132-0347	G1005	25,4 mm	25,4 mm	10615K	10615K	22014	Obsol.	G1006	21208, 21209	(2) 23448	
OMC												
In Board	981939	G45-2	31,8 mm	31,8 mm	10615K	23976	23977	Obsol.	G46	12859	(2) 23448	
V8 Chevy	985096	G46	31,8 mm	31,8 mm	10615K	23976	23977	Obsol.		12859	(2) 23448	
6-8 Cil	3852398	G9901	31,8 mm	25,4 mm	09959K	23979	12665	Bomba SHE SHE pump Pompa SHE Pompe SHE		12859	(2) 23448	
4 Cil	3852399	G9902	31,8 mm	25,4 mm	09959K	23979	12665	Obsol.	G9903	12859	(2) 23448	
4 Cil	3855079	G9903	31,8 mm	25,4 mm	09959K	23979	12665	Bomba SHE SHE pump Pompa SHE Pompe SHE		12859	(2) 23448	
Perkins Engine U.S.												
40-108 Diesel	NA003335	G65	19,1 NPT	19,1 NPT	09959K	09959K	12221	Bomba SHE SHE pump		10514	(2) 23448	
4-154 Diesel	NA005576	H5	25,4 mm	25,4 mm	09959K	12981	12980	Pompa SHE Pompe SHE		10514, 06602	(2) 4257	
6-354 Diesel	NA001175	RPBC	25,4 NPT	25,4 NPT	10615K	10999	11068	Bomba SHE		10927	4257	

	OEM	BOMBA PUMP POMPA POMPE			KIT MENOR KIT MINOR KIT MINEUR	KIT MAYOR KIT MAJOR KIT MAJEUR		REEMPLAZA REPLACES SOSTITUISCE REMPLACE	KIT RETEN SEAL KIT KIT PARAOLIO KIT JOINT HUILE		KIT EJE SHAFT KIT KIT ASSE KIT ARBRE
Pleasurecraft Marine											
Chevy 454		G55-2	31,8 mm	31,8 mm	10615K	23976	23977	Bomba SHE SHE pump Pompa SHE Pompe SHE		12859	(2) 23448
302 - 351		G20	25,4 mm	25,4 mm	09959K	23979	12665	Obsol.	G21	12859	(2) 23448
302 - 351		G21-01	25,4 mm	25,4 mm	09959K	23979	12665		G21	12859	(2) 23448
Mitsubishi 4 Cil		G22-01	-	-	09959K	23979	12665	Blindada Proprietary Blindata Blindée	G22	12859	(2) 23448
7.3L Diesel		G26-01	31,8 mm	31,8 mm	10615K	23976	23977		G26	12859	(2) 23448
350 GM		P105-01	31,8 mm	31,8 mm	10615K	10615K	19354		P105	18652	(2) 08490
5.7L V8 GM		P1012-01	31,8 mm	31,8 mm	10615K	19301	19300			12859	(2) 23448
8.1L V8 GM		P109	31,8 mm	31,8 mm	10615K	10615K	19354			18652	(2) 08490
Volvo Penta											
		G30-2	25,4 mm	25,4 mm	09959K	23979	12665	Bomba SHE SHE pump Pompa SHE Pompe SHE		12859	(2) 23448
		G85	31,8 mm	31,8 mm	10615K	23976	23977			12859	(2) 23448
6-8 Cil	3852398	G9901	31,8 mm	25,4 mm	09959K	23979	12665			12859	(2) 23448
4 Cil	3852399	G9902	31,8 mm	25,4 mm	09959K	23979	12665	Obsol.	G9903	12859	(2) 23448
4 Cil	3855079	G9903	31,8 mm	25,4 mm	09959K	23979	12665	Bomba SHE SHE pump Pompa SHE Pompe SHE		12859	(2) 23448
J.H. Westerbeke Corp.											
Pilot 10-20	16423	F85-01	12,7 NPT	12,7 NPT	09959K		12221	Blindada Proprietary Blindata Blindée		10514	(2) 23448
Gov Life Boat	11353	R10870G-01	19,1 NPT	19,1 NPT	09959K	10997	12937	Bomba SHE SHE pump Pompa SHE Pompe SHE	R10870G	10927	4257
Gov Life Boat	302648	G903	12,7 NPT	12,7 NPT	09000K			Obsol.	G908-01	12859 18806	(2) 23448
Gov Life Boat	42175	G908-01	12,7 NPT	12,7 NPT	09000K			Blindada Proprietary Blindata Blindée		12859 18806	(2) 23448

EXTRACTOR DE IMPULSORES — IMPELLERS EXTRACTOR — ESTRATTORE GIRANTI — EXTRACTEUR DE TURBINES

REF	
SHE25105	17000 18000 22000 26000 29000 30000
SHE25106	27000



SHE25106

SHE25105

IMPULSORES

SHERWOOD da tres sugerencias sencillas para instalar un impulsor nuevo:

1 Use un lubricante con base NO derivada del petróleo (por ejemplo, silicona o agua jabonosa) para instalar el impulsor de una forma más sencilla.
2 Instale el impulsor en el eje con un movimiento rotatorio. Nunca fuerce el impulsor sobre el eje. Debe moverse libremente sobre el eje para un cebado y funcionamiento adecuados.
3 Aplique una pequeña cantidad de lubricante con base NO derivada del petróleo para fijar el aro tórico en su sitio y coloque la tapa.

SHERWOOD recomienda inspeccionar detenidamente el impulsor al realizar el mantenimiento de la bomba. Reemplace el impulsor si observa lo siguiente: desgarro o rotura en alguna de las palas del impulsor. Flexione las palas para poder examinarlas mejor.

EL RECALENTAMIENTO ES LA CAUSA PRINCIPAL DEL DESGASTE PREMATURO DEL MOTOR.

IMPELLERS

Sherwood suggests three easy tips to help you install your new impeller:

1 Use a Non-petroleum based lubricant (i.e. silicone or soapy water) to help slide the impeller.
2 Install the impeller with a twisting motion onto the shaft. Never force the impeller onto the shaft. The impeller must move freely on the shaft to properly prime and function.
3 Use a small amount of Non-petroleum based lubricant to help hold the o-ring when replacing the cover.

SHERWOOD recommends inspecting your impeller closely during any pump maintenance. Replace the impeller if you discover either of the following: tear or rip on any of the impeller blades. Flex the blades to examine more thoroughly.

THE 1 REASON FOR PREMATURE ENGINE WEAR IS OVERHEATING.

GIRANTE

SHERWOOD consiglia tre semplici accorgimenti per l'installazione di una girante nuova:

1 Utilizzare un lubrificante con una base che Non derivi dal petrolio (per esempio silicone, o acqua insaponata).
2 Montare la girante con un movimento rotatorio, tenendo conto che essa deve muoversi liberamente per un corretto funzionamento. Non spingere mai la girante sopra l'asse.
3 Applicare una piccola quantità di lubrificate, posizionare l'anello di tenuta nella posizione corretta, quimdi, procedere a montare il coperchio.

SHERWOOD racomanda ispezionare attentamente la girante, e si osserva il seguente: strappatura o rottura di una o più pale, provedere a sostituirla.

IL RISCALDAMENTO È LA CAUSA PRINCIPALE DEL CONSUMO DEL MOTORE.

TURBINE

SHERWOOD donne trois suggestions simples pour l'installation d'une nouvelle turbine :

1 Utilisez un lubrifiant NON à base de pétrole (par exemple, du silicone ou de l'eau savonneuse) pour installer la turbine plus facilement.
2 Installez la turbine sur l'arbre dans un mouvement de rotation. Ne jamais forcer la turbine sur l'arbre. Elle doit bouger librement sur l'arbre pour assurer un amorçage et un fonctionnement corrects.
3 Appliquer une petite quantité de lubrifiant NON à base de pétrole pour fixer le joint torique en place et remettre le couvercle en place.

SHERWOOD recommande d'inspecter soigneusement la turbine lors de l'entretien de la pompe. Remplacez la turbine si vous observez les signes suivants : déchirure ou rupture de l'une des pales de la turbine.

LE RÉCHAUFFEMENT EST LA PRINCIPALE CAUSE DE L'USURE PRÉMATURÉE DU MOTEUR.

REF	PALAS BLADES PALE PALES	EJE SHAFT ASSE ARBRE			A (mm)	B (mm)	C (mm)
SHE08000K	6	-	11	30°	11.1	40.0	19
SHE10077K	12	3/32"	10	45°	12.7	57.0	20
SHE09000K	12	3/16"	10	45°	15.9	62.5	22
SHE09959K	12	3/16"	10	30°	15.9	62.5	32
SHE10615K	12	3/16"	14		15.9	65.0	41
SHE15000K	12	3/16"			15.9	65.0	51
SHE17000K	12	3/16"			20.0	84.0	73
SHE27000K	12	Estr.splined				84.0	73
SHE18000K	12	Estr.splined			23.8	95.0	102
SHE26000K	12					95.0	80
SHE29000K	12	Estr.splined			23.8	95.0	102
SHE30000K	10				25	114.0	110
SHE22000K	10				25	114.0	110

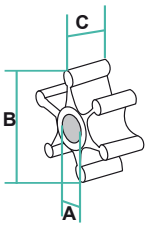


SHE26000K


SHE08000K


SHE10077K


SHE09000K


SHE09959K


SHE15000K


SHE27000K


SHE18000K


SHE17000K


SHE22000K


SHE29000K


SHE30000K


SHE10615K

GUÍA DE KITS — KITS GUIDE — GUIDA DA KIT — GUIDE DE KITS

REF	BOMBA DE AGUA WATER PUMP POMPA ACQUA POMPE A EAU	CASQUILLO BUSHING BOCCOLA BAGUE		SELLO SEAL ASSY SIGILLANTE SIGILLANT	TÓRICA O-RING FASCIA TONDA TORIQUE		LEVA CAM CAMMA CAMME	PLACA PLATE PIASTRA PLAQUE	CHAVETA KEY CHIAVETA CLAVETTE	TAPA COVER COPERCHIO COUVERCLE	RETÉN LIP SEAL PARAOLIO JOINT HUILE	AROS RETE. RET. RINGS ANELLO TEN. BAGUE RET.	ARANDELA WASHER RONDELLA RONDELLE	EJE SHAFT ASSE ARBRE
SHE09959K	R991, B06, G65				2	1								
SHE10615K	P102, P105, P109, G1004, G1005, G1006, G1008				2	1								
	D75, D60, D65			1	2	2								
	R10870G, R10930G, R50G			1	2	1			1			1		
	E35, C-03, F10, S11040G, B04, R10970G, RPBC, F95, R102			1	1	1			1			1		
	P101, P1012			1	1	1								
SHE23972	P1712, P1716B, P173, P1722B, P1727FB, P1730F, P1731F, P1711, P1719, P1719F			1	1	1		1	1			1		
SHE23973	P171, P176, P172, P1710, P1726, P1726TC, P1732			1	1	1		1	1			1		
SHE23976	G3, G4, G5, G5-1, G7, G7B, G8, G26, G45-1, G45-2, G46, G50, G55-2, G56, G85, H-85, K90, L10, L10B, L80, L90, M71			1	2	1			1			3	1	
SHE23979	G1, G2, G15, G20, G21, G22, G30-2, G30-2B, G95-1, G9901, G9902, G9903, H10, J70, K75, K75B			1	2	1			1			3	1	
SHE23980	GC1, GC4, GC5, G157, G151, G155, G1503			1	2	1			1			3	1	
	G1804, G1806, G18061, G1808, G18081			1	2	1	2					1	1	
	G1810			1	2	1	2					1	1	
	G1805, G1807, G18071			1	2	1	2					1	1	
SHE11068	E35, C-03, F10, S11040G, B04, RPBC, R102	1	1	1	1	1	1		1			3		
SHE12221	G65, F85		2		1	1					1			
	D60, D65	1	1	1	2	2	2	1						
SHE12665	G1, G2, G15, G20, G21, G22, G30-2, G30-2B, G95-1, G9901, G9902, G9903, H10, J70, K75, K75B		2	1	2	1	1	1	1			5	1	
SHE12937	R10870G, R50G	1	1	1	2	1	1		1			4		
	H5		1		1	1	1		1		1			
SHE25029	P101, P1012		2	1	1	1						1		
SHE19354	P102, P105, P109		2		2	1					1	1		1
	G1503		2	2	1	1		1	1	1		3	1	
SHE23974	P1712, P1716B, P173, P1722B, P1727FB, P1730F, P1731F, P1711, P1719, P1719F		2	1	1	1	1	1	1	1	1	3	3	
SHE23975	P171, P176, P172, P1710, P1726, P1726TC, P1732		2	1	1	1	1	1	1	1	1	3	3	
SHE23977	G3, G4, G5, G5-1, G7, G7B, G8, G26, G45-1, G45-2, G46, G50, G55-2, G56, G85, H-85, K90, L10, L10B, L80, L90, M71		2	1	2	1	1	1	1			5	1	
SHE23981	GC1, GC4, GC5, G157, G151, G155		2	1	2	1	1	1	1			5	1	
	G1804, G1806, G18061			1	2	1	2	1		1	1	2	2	
	G1810			1	2	1	2	1		1	1	2	1	
	G1805, G1807, G18071			1	2	1	2	1		1	1	2	2	



SHE09959K



SHE10615K



SHE23972



SHE23973



SHE23976



SHE23979



SHE23980



SHE11068



SHE12221



SHE12665



SHE12937



SHE25029



SHE19354



SHE23974



SHE23975



SHE23977



SHE23981

IMPULSORES IMPELLERS GIRANTE TURBINE

REF	OEM	PALAS BLADES PALE PALES	CASQUILLO BUSHING BOCCOLA BAGUE	A (mm)	B (mm)	C (mm)
JAB11979-0001	CHRYSLER	8	7	16	65	36,65
JAB12104-0001	YANMAR 128170-42070	6	2	8	32	12
JAB14750-0001		8	4	8	32	12
JAB14750-0003		8	4	8	32	12
JAB17018-0001	MERCRUISER DIESEL VOLVO 3583602 CATERPILLAR 3N5895	8	7	16	65	76,2
JAB17370-0001	DDA 8927570 CUMMINS 3008503 CATERPILLAR 3N-4859	12	5	25	95	88,9
JAB17937-0001-P	VOLVO 801277, 825941, 877061-2 CATERPILLAR 7C-3286 YANMAR 127610-42200 PERKINS 0460024, 24880031	10	7	16	65	51
JAB17938-0001-P	VOLVO 3830663	12	7	25	95	95
JAB17956-0001		10	6	16	65	51
JAB18777-0001-P		10	7	16	57	51
JAB18786-0001		9	5	25	118	88,9
JAB18789-0001		9	7	25	118	88,9
JAB3085-0001	CHRIST-CRAFT FORD 18830-1020, 18840-1010 PERKINS USA 24880190	10	7	16	57	31,5
JAB30919-0001		12	5	20	77	76,2
JAB4527-0001		6	2	8	51	22
JAB5616-0001	WESTERBEKE 5320-0011	6	6	12,7	51	22

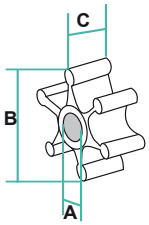

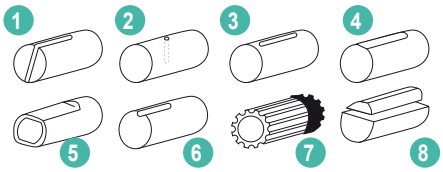


JAB12104-0001


JAB14750-0001


JAB14750-0003


JAB11979-0001


JAB17938-0001-P


JAB17956-0001

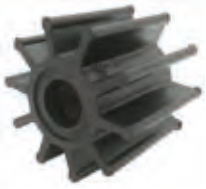
JAB18777-0001-P


JAB17018-0001


JAB18786-0001


JAB18789-0001


JAB30919-0001


JAB4527-0001


JAB17370-0001


JAB17937-0001-P


JAB5616-0001


JAB3085-0001

GUÍA IMPULSORES — IMPELLERS GUIDE — GUIDA GIRANTE — GUIDE TURBINE



PIN DRIVE

PALAS BLADES PALE PALES	(mm) A	B	C	RECMAR	CEF	JOHNSON	SHERWOOD	JABSCO	VOLVO	MERCRUISER	YANMAR	VETUS	PERKINS	SOLE Diesel	NANNI Diesel	ONAN	WESTERBEKE
6	9,54	39,6	18,94	REC3586494	CEF500100GX	JOH09-806B	9979	4528-0001-P	3586494		104211-42071	IMP00501	24880272			132-0859	
6	9,54	39,6	18,94	REC3586494	CEF500200GX	JOH09-806B	9979	4528-0001-P	3586494		104211-42071	IMP00501	24880272			132-0859	
6	10	39,6	19,2		CEF500131X									321.11.008			
6	12	39,6	19,2	REC3586496	CEF500121GX	JOH09-808B		22405-0001	3586496			IMP00601			434013	132-0310	32620
6	12	52	25		CEF500123X									312.11.008			
6	12,17	50,8	22,1	REC653-0001	CEF500101X	JOH09-810B		653-0001			128990-42200	STM8061			434014		33636
6	12,17	50,8	22,1	REC653-0001	CEF500201	JOH09-810B		653-0001			128990-42200	STM8061			434014		
6	12,66	50,8	22,1	REC3593659	CEF500116GX	JOH09-1026B		673-0001	3593659	47-810567		IMP00901	24880194				34440
6	12,66	50,8	22,1	REC3593659	CEF500216	JOH09-1026B		673-0001	3593659	47-810567		IMP00901	24880194				34440
10	12,17	51,8	22		CEF500146X			18653-0001-P				IMP00701					
10	12,66	51,8	22		CEF500156GX			18673-0001									



SPLINE

PALAS BLADES PALE PALES	(mm) A	B	C	RECMAR	CEF	JOHNSON	SHERWOOD	JABSCO	VOLVO	MERCRUISER	YANMAR	PLEASURECRAFT	CATERPILLAR	CUMMINS	MAN
8	14,29	58,65	36,65	REC11979-0001	CEF500155			JAB11979-0001							
8	14,29	65	50,2	REC3841697	CEF500106GT	JOH09-1028B		920-0001	3841697	47-801332602	127610-42200	R061003E	3N1906	650607	50.06506.0091
8	14,29	65	50,2	REC3841697	CEF500206	JOH09-1028B		920-0001			127610-42200	R061003E	3N1906	650607	
8	14,29	65,2	76,65	REC3593573	CEF500177GT			JAB17018-0001	3593573	47-816814T			3N5895		
9	22,5	95	88,5	REC6760-0001	CEF500115T	JOH09-802B		6760-0001							
9	22,5	96	63,1	REC836-0001	CEF500105T	JOH09-1029B		836-0001	21730344				1L4774	556540	
9	22,5	96	63,1	REC836-0001	CEF500205	JOH09-1029B		836-0001	875736				1L4774	556850	
9	22,5	117,6	88,5	REC18789-0001	CEF500144			JAB18789-0001							
10	14,29	65	50,1	REC17937-0001	CEF500114T		18200	JAB17937-0001-P	3588475	47-8013326-01					
10	14,29	65	50,1	REC17937-0001	CEF500214		18200	JAB17937-0001-P		47-8013326-01					
10	14,29	65	68,2	REC47-809866T	CEF500161			31130-0061		47-831311350	119593-42202				
10					CEF500172			DEV4307							
12	14,29	57	31,6	REC21213660	CEF500207	JOH09-1027B		1210-0001	21213660		129470-42532	R061003			
12	14,29	57	48,2	REC13554-0001	CEF500124	JOH09-812B		13554-0001			119773-42600				
12	12,29	57	48,2	REC21213664	CEF500178G				21213664						
12	14,29	57	50,2	REC22120-0001	CEF500104			JAB18777-0001-P	876120						
12	14,29	57,15	48,25		CEF500150			13554-6001							
12	22,5	65,8	80	REC3887761	CEF500162G	JOH09-821B			3887761		119574-42552				51.06506.0103
12	22,5	95	63,1		CEF500135	JOH09-819B		17935-0001	21951362				5N9360		
12	22,5	95	88,5	REC875697	CEF500145T	JOH09-814B		17936-0001	21951364		165000-35270		4L8470		50.06506.0089
12	22,5	95	95		CEF500163G			JAB17938-0001-P	3830459						
12	22,5	96,5	130	REC09-820B	CEF500186T	JOH09-820B									51.06506.0106
12						JOH09-842B									51.06506.0127

PALAS BLADES PALE PALES	(mm) A	B	C	RECMAR	CEF	JOHNSON	SHERWOOD	JABSCO	DETROIT	VETUS	PERKINS	SOLE D	YAMAHA	RENAULT	ONAN	WESTERBEKE
8	14,29	65	50,2	REC3841697	CEF500106GT	JOH09-1028B		920-0001	5193602		460024	347-11-008		RC320D		
8	14,29	65	50,2	REC3841697	CEF500206	JOH09-1028B		920-0001	5199148		24880031					
9	22,5	96	63,1	REC836-0001	CEF500105T	JOH09-1029B		836-0001	5193553	IMP00901	460027					
9	22,5	96	63,1	REC836-0001	CEF500205	JOH09-1029B		836-0001	5193553	IMP00901	460027					
10	14,29	65	50,1	REC17937-0001	CEF500114T		18200	JAB17937-0001-P		IMP00301						
10	14,29	65	50,1	REC17937-0001	CEF500214		18200	JAB17937-0001-P		IMP00301						
12	14,29	57	31,6	REC21213660	CEF500207	JOH09-1027B		1210-0001	5194205	IMP00201	460038	351-11-008			131-0050	302571
12	14,29	57	48,2	REC13554-0001	CEF500124	JOH09-812B		13554-0001					GTA-12457-00			
12	22,5	65,8	80	REC3887761	CEF500162G	JOH09-821B										
12	22,5	95	63,1		CEF500135	JOH09-819B		17935-0001	8924838		7054					
12	22,5	95	88,5	REC875697	CEF500145T	JOH09-814B		17936-0001	5196168	IMP00801	460027					



KEY DRIVE

PALAS BLADES PALE PALES	(mm) A	B	C	CEF	VOLVO
12	10	39,6	14,3	CEF500380	3555413



SPECIFIC DRIVE

PALAS BLADES PALE PALES	(mm) A	B	C	RECMAR	CEF	OMC
10	12,76	85,5	40,41	REC777128	CEF500317	777128



KEY DRIVE

PALAS BLADES PALE PALES	(mm) A	B	C	RECMAR	CEF	JOHNSON	SHERWOOD	JABSCO	VOLVO	MERCRUISER	OMC	CRUSADER	CHRIS-CRAFT	PLEASURECRAFT	YANMAR	CATERPILLAR
6	12,75	50,8	22,1	REC22779-0001	CEF500129	09-827		22779-0001							128620-42201	
8	15,9	65	50,2	REC4598-0001	CEF500102T		10187	4598-0001	818680							
8	15,9	65	50,2	REC4598-0001	CEF500202		10187	4598-0001	818680							
8	15,93	65,2	50,2		CEF500160			4599-0101								
8	15,95	62,2	22,4	REC09000K	CEF500165		SHE09000K								128620-42200	
12	12,8	56,6	19,8		CEF500166		SHE10077K						16.80-90047			
12	15,9	62	31,7	REC3854286	CEF500103T	09-701	SHE09959K	18838-0001	3854286		3854286	1003026		R061015		
12	15,9	65,2	41,3	REC10615K	CEF500120T	09-702	SHE10615K	18948-0001	835874		981939	20300	16.80-90131	R061017		
12	15,93	57	31,6		CEF500208			4568-0003								
12	16	57	31,6	REC875575	CEF500170CG	JOH09-801B		6174-0001	875575						145410-46090	
12	16	65	51,2	REC15000K	CEF500167		SHE15000K	18327-0001		47-853126						
12	20,1	84	73,5	REC17000K	CEF500164T	09-704	SHE17000K	18958-0001								1W5664

PALAS BLADES PALE PALES	(mm) A	B	C	RECMAR	CEF	JOHNSON	SHERWOOD	JABSCO	CUMMINS	VETUS	PERKINS	YAMAHA	RENAULT	ONAN	WESTERBEKE	KOHLER
6	10	50,8	22,1		CEF500127								48300055			
6	12,75	50,8	22,1	REC22779-0001	CEF500129	09-827		22779-0001		IMP00101						229955
8	15,95	62,2	22,4	REC09000K	CEF500165		SHE09000K								302875	229826
8	17	65	48,6		CEF500122T								48300008			
8	17	66	32		CEF500128								48300007			
12	12,8	56,6	19,8		CEF500166		SHE10077K							132-0375	33112	
12	15,9	62	31,7	REC3854286	CEF500103T	09-701	SHE09959K	18838-0001			NA900010	10103-100C		132-0317	33104	
12	15,9	65,2	41,3	REC10615K	CEF500120T	09-702	SHE10615K	18948-0001	3908220		NA900012	6TA-12457-00		132-0349	33779	
12	15,93	57	31,6		CEF500208			4568-0003								
12	20,1	84	73,5	REC17000K	CEF500164T	09-704	SHE17000K	18958-0001	3802444							



SINGLE FLAT DRIVE

PALAS BLADES PALE PALES	(mm) A	B	C	RECMAR	CEF	JOHNSON	SHERWOOD	JABSCO	MERCRUISER	YANMAR	ONAN	KOHLER
6	7,31	50,8	22,1		CEF500110	09-824		7273-0003				
6	7,31	50,8	22,1		CEF500210	09-824		6303-0003				
6	7,31	51,3	22		CEF500138	09-834		6303-0001				
6	7,31	51,3	22		CEF500238	09-834		6303-0001				
6	7,4	35,4	12,8		CEF500284G	09-1077						
6	8	44,6	13		CEF500132	09-1052B-9						
6	8	44,9	13		CEF500232	09-1052-S9						
6	8	31,3	11,9		CEF500113			21411-0001		128176-42071		
6	8	31,3	11,9		CEF500213			14787-0003				
6	8	31,75	12		CEF500230			1414-0003				
6	12,2	19	40	REC08000K	CEF500190G		SHE08000K				132-0415	359978
6	22,3	60	33,8	REC47-89984T4	CEF500313G				47-89984T4			
6	22,4	89	32,5	REC47-43026Q02	CEF500301				47-43026Q02			
8	16,85	66,5	50,6	REC47-59362Q01	CEF500109			17954-0001-P	47-59362Q01			
10	16,85	65	50,7		CEF500148			17954-0001				



DOUBLE FLAT DRIVE

PALAS BLADES PALE PALES	(mm) A	B	C	RECMAR	CEF	JOHNSON	JABSCO	MERCRUISER	CATERPILLAR	CUMMINS	DETROIT
8	11,4	66,5	50,6	REC47-862232A2	CEF500159G			47-862232A2			
9	20,2	117,6	88,5	REC18786-0001	CEF500153		JAB18786-0001		PP1027		23502086
10	13,42	57,18	50,25		CEF500157		50461-1001				
11	25,4	94	63		CEF500185	09-0838S					
12	20,2	95	88,5	REC17370-0001	CEF500152		JAB17370-0001		3N8459	3008503	8927570



PULLER DRIVE

PALAS BLADES PALE PALES	(mm) A	B	C	RECMAR	CEF	SHERWOOD	YANMAR	CATERPILLAR	CUMMINS
10	20,7	114,3	109,5	REC22000K	CEF500179GX	SHE22000K		3N8449	
10	24,35	114,3	109,5		CEF500193GX	SHE30000K			
12	16,1	84	73	REC27000K	CEF500181G	SHE27000K			3974456
12	20	94,5	79,8		CEF500183G	SHE26000K			3972366
12	20	94,5	101,5	REC29000K	CEF500192GX	SHE29000K	128620-42201	2968388	
12	20,7	94,5	101,5	REC18000K	CEF500182G	SHE18000K		1095327	4019403

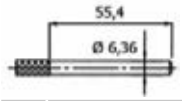

PALAS BLADES PALE PALES	(mm)		CEF	JABSCO
6	39,1	18,9	CEF500258	17255-0003

REF --> OEM

REF	OEM		
A			
A/P2277	A4867HA	780	BORG-W.
A/P2278		780	BORG-W.
A/P2279	1308-410-001	780	BORG-W.
A/P2281		815	HURT
ALT023941	100-238-002	779	BORG-W.
ALT340940	2001-238-001	779	BORG-W.
ALTDA-101	1004-650-001	779	BORG-W.
ALTDA-102	1004-650-002	779	BORG-W.
ALTDA-107	1004-650-007	779	BORG-W.
ALTDA-108	1004-650-008	779	BORG-W.
ARC86050	30594	846	WESTERB.
ARC86050		847	WESTERB.
B			
BACC47-1650-06022	1650-056022	790	CHRIS-C.
BAPE-1-6354	89058	829	PERKINS
C			
CEF500100GX	24880272	831	PERKINS
CEF500100GX		819	KOHLER
CEF500100GX		827	ONAN
CEF500100GX		830	PERKINS
CEF500100GX		859	JABSCO
CEF500101X	37431	846	WESTERB.
CEF500101X	48080	846	WESTERB.
CEF500101X	434014	823	NANNI D.
CEF500101X	STM8061	844	VETUS
CEF500101X		859	JABSCO
CEF500102T		860	JABSCO
CEF500103T	11418	846	WESTERB.
CEF500103T	11907	846	WESTERB.
CEF500103T	22212	800	CRUSADER
CEF500103T	33104	846	WESTERB.
CEF500103T	1003026	800	CRUSADER
CEF500103T	1003062	800	CRUSADER
CEF500103T	24880178	831	PERKINS
CEF500103T	132-0117	827	ONAN
CEF500103T	132-0317	827	ONAN
CEF500103T	NA900010	831	PERKINS
CEF500103T		820	KOHLER
CEF500103T		860	JABSCO
CEF500104		834	PLEASUREC.
CEF500104		859	JABSCO
CEF500105T	460027	831	PERKINS
CEF500105T	5193553	814	DETROIT D.
CEF500105T	1L4774	788	CATERPIL.
CEF500105T		859	JABSCO
CEF500106GT	5193602	814	DETROIT D.
CEF500106GT	5196629	814	DETROIT D.
CEF500106GT	5199148	814	DETROIT D.
CEF500106GT	347.11.008	843	SOLE D.
CEF500106GT	3N1906	788	CATERPIL.
CEF500106GT	50.06506.0091	821	MAN
CEF500106GT	50.06506.0091	823	NANNI D.
CEF500106GT	IMP00301	844	VETUS
CEF500106GT	RC320D	842	RENAULT C.
CEF500106GT		859	JABSCO
CEF500107T	460038	831	PERKINS
CEF500107T	24880190	831	PERKINS
CEF500107T	08-21-1201	827	ONAN
CEF500107T	131-0050	827	ONAN
CEF500107T	132-0162	827	ONAN
CEF500107T	351.11.008	843	SOLE D.
CEF500107T		832	PERKINS
CEF500109		860	JABSCO
CEF500110		860	JABSCO
CEF500113		860	JABSCO
CEF500114T	460024	831	PERKINS
CEF500114T	24880031	831	PERKINS
CEF500114T	7C3286	788	CATERPIL.
CEF500114T		814	DETROIT D.
CEF500114T		823	NANNI D.
CEF500114T		859	JABSCO
CEF500115T		859	JABSCO
CEF500116GX	24880194	831	PERKINS
CEF500116GX		859	JABSCO
CEF500120T	13930	846	WESTERB.
CEF500120T	20300	800	CRUSADER
CEF500120T	20310	800	CRUSADER
CEF500120T	3908220	811	CUMMINS
CEF500120T	132-0292	827	ONAN
CEF500120T	132-0348	827	ONAN
CEF500120T	132-0349	827	ONAN
CEF500120T	NA900012	831	PERKINS
CEF500120T	R061017	800	CRUSADER
CEF500120T		860	JABSCO
CEF500121GX	434013	823	NANNI D.
CEF500121GX		859	JABSCO
CEF500122T	48300008	842	RENAULT C.
CEF500122T		860	JABSCO
CEF500123X	312.11.008	843	SOLE D.
CEF500123X		859	JABSCO
CEF500124		859	JABSCO
CEF500127	48300037	842	RENAULT C.
CEF500127		860	JABSCO
CEF500128	48300006	842	RENAULT C.
CEF500128		860	JABSCO
CEF500129	229955	820	KOHLER
CEF500129	250872	820	KOHLER
CEF500129	IMP00101	844	VETUS
CEF500129		860	JABSCO
CEF500131X	321.11.008	843	SOLE D.
CEF500131X		859	JABSCO
CEF500132		860	JABSCO
CEF500135	8924838	814	DETROIT D.
CEF500135	50.06506.0089	823	NANNI D.
CEF500135	5N9360	788	CATERPIL.
CEF500135		788	CATERPIL.
CEF500135		809	CUMMINS
CEF500135		811	CUMMINS
CEF500135		859	JABSCO
CEF500138		860	JABSCO
CEF500144		859	JABSCO
CEF500145T	460027	831	PERKINS
CEF500145T	5196168	814	DETROIT D.
CEF500145T	4L8470	788	CATERPIL.
CEF500145T	50.06506.0089	821	MAN
CEF500145T		859	JABSCO
CEF500146X	IMP00701	844	VETUS
CEF500146X		823	NANNI D.
CEF500146X		859	JABSCO
CEF500148		860	JABSCO
CEF500150		859	JABSCO
CEF500152	8927570	814	DETROIT D.
CEF500152	3N4859	788	CATERPIL.
CEF500152		860	JABSCO
CEF500153	23502086	814	DETROIT D.
CEF500153		860	JABSCO
CEF500155		859	JABSCO
CEF500156GX		859	JABSCO
CEF500157		860	JABSCO
CEF500159G		860	JABSCO
CEF500160		860	JABSCO
CEF500161		859	JABSCO
CEF500162G	51.06505.0103	821	MAN
CEF500162G		859	JABSCO
CEF500164T	3802444	811	CUMMINS
CEF500164T	3897337	811	CUMMINS
CEF500164T	3916852	811	CUMMINS
CEF500164T	3925236	811	CUMMINS
CEF500164T	1W5664	788	CATERPIL.
CEF500164T	7E0321	788	CATERPIL.
CEF500164T		860	JABSCO
CEF500165	229826	820	KOHLER
CEF500165	302875	846	WESTERB.
CEF500165		860	JABSCO
CEF500166	11764	846	WESTERB.
CEF500166	33100	846	WESTERB.
CEF500166	132-0375	827	ONAN
CEF500166	132-0498	827	ONAN
CEF500166		820	KOHLER
CEF500166		860	JABSCO
CEF500167	3349198	811	CUMMINS
CEF500167	3916720	811	CUMMINS
CEF500167		860	JABSCO
CEF500170CG		860	JABSCO
CEF500172		859	JABSCO
CEF500177GT	3N5895	788	CATERPIL.
CEF500177GT		859	JABSCO
CEF500178G		859	JABSCO
CEF500179GX	3N8449	788	CATERPIL.
CEF500179GX		860	JABSCO
CEF500181G	3974456	811	CUMMINS
CEF500181G		860	JABSCO
CEF500182G	1095324	788	CATERPIL.
CEF500182G	1095327	788	CATERPIL.
CEF500182G	1230492	788	CATERPIL.
CEF500182G	1237985	788	CATERPIL.
CEF500182G	4019403	811	CUMMINS
CEF500182G	4933743	811	CUMMINS
CEF500182G		860	JABSCO
CEF500183G	3972366	811	CUMMINS
CEF500183G		860	JABSCO
CEF500185		860	JABSCO
CEF500186T	51.06505.0106	821	MAN
CEF500186T		859	JABSCO
CEF500190G	359978	820	KOHLER
CEF500190G	132-0407	827	ONAN
CEF500190G	132-0415	827	ONAN
CEF500190G		860	JABSCO
CEF500192GX		811	CUMMINS
CEF500192GX		860	JABSCO
CEF500193GX		860	JABSCO
CEF500200GX		859	JABSCO
CEF500201		859	JABSCO
CEF500202		860	JABSCO
CEF500205		859	JABSCO
CEF500206		859	JABSCO
CEF500207		859	JABSCO
CEF500208		860	JABSCO
CEF500210		860	JABSCO
CEF500213		860	JABSCO
CEF500214		859	JABSCO
CEF500216		859	JABSCO
CEF500230		860	JABSCO
CEF500232		860	JABSCO
CEF500238		860	JABSCO
CEF500258		860	JABSCO
CEF500284G		860	JABSCO
CEF500301		860	JABSCO
CEF500313G		860	JABSCO
CEF500317		859	JABSCO
CEF500317		860	JABSCO
CEF500380		859	JABSCO
CM6L2016	6L2016	789	CATERPIL.
CM6L2283	6L2283	789	CATERPIL.
CM6L2288	6L2288	789	CATERPIL.
CM8515842		813	DETROIT D.
CM8515850		813	DETROIT D.
CME-8	6L2285	789	CATERPIL.
CME0	11885	847	WESTERB.
CME0	260085	820	KOHLER
CME0	267928	820	KOHLER
CME0		820-821	KOHLER
CME0		847-848	WESTERB.
CME1	6L2280	789	CATERPIL.
CME1E		813	DETROIT D.
CME2		813	DETROIT D.
CME2		828	ONAN
CME4		813	DETROIT D.
CME8D	6L2284	789	CATERPIL.
D			
DEV4307		859	JABSCO
DJC004	3010336	809	CUMMINS
DJC004	3278137	809	CUMMINS
DJC004		811	CUMMINS
DJC0819	3912139	809	CUMMINS
DJC0819	3922589	809	CUMMINS
DJC0819		811	CUMMINS
DJC0820	3010336	809	CUMMINS
DJC0820	3278137	809	CUMMINS
DJC0820	3907458	809	CUMMINS
DJC0820	3912019	809	CUMMINS
DJC0820		811	CUMMINS
DJC0830	3912962	810-811	CUMMINS
DJC1730	3866493	810	CUMMINS
DJC1730	3897194	806	CUMMINS
DJC1730		811	CUMMINS
DJC2701	3922589	810-811	CUMMINS
F			
FEL17060	RM0032	832	PLEASUREC
H			
HGE1086		813	DETROIT D.
HGE2027	53-2027-T	816	INDMAR
HOT20011	R029001	833	PLEASUREC.
HOT20775-MK		796	CRUSADER
HOT20799-MK		796	CRUSADER
HOT20907	53-2009	815	INDMAR
HOT20907	53-2018	815	INDMAR
HOT20916	97169	798	CRUSADER
HOT20916-MK		798	CRUSADER
HOT20918	97386	798	CRUSADER
HOT20925	96120	796	CRUSADER
HOT20925	97752	796	CRUSADER
HOT20926	96121	796	CRUSADER
HOT20926	97753	796	CRUSADER
HOT20927	97772	798	CRUSADER
HOT20927-MK		798	CRUSADER
HOT20928	97924	798	CRUSADER
HOT20929	97114	796	CRUSADER
HOT20929	97992	796	CRUSADER
HOT20933	97115	796	CRUSADER
HOT20933	97993	796	CRUSADER
HOT20934	96560	798	CRUSADER
HOT20934	98068	798	CRUSADER
HOT20938	98126	797	CRUSADER
HOT20939		816	INDMAR
HOT20982	98125	797	CRUSADER
HOT20982-MK		797	CRUSADER
HOT20992-MK		816	INDMAR
HOT20996	R028001	833	PLEASUREC.
HOT20996-MK		833	PLEASUREC.
HOT20997	0994-000	815	INDMAR
HOT20998	53-2800	815	INDMAR
HOT20998-MK		815-816	INDMAR
HOT26562-MK	96562	798	CRUSADER
HOT27214-MK		833	PLEASUREC.
HOT30984	98128	797	CRUSADER
HOT30984-MK		797	CRUSADER
J			
JAB11979-0001		858-859	JABSCO
JAB12104-0001	08-21-1201	827	ONAN
JAB12104-0001	131-0050	827	ONAN
JAB12104-0001	132-0162	827	ONAN

REF	OEM		
JAB12104-0001		858	JABSCO
JAB14750-0001		858	JABSCO
JAB14750-0003		858	JABSCO
JAB17018-0001	3N5895	788	CATERPIL.
JAB17018-0001		858-859	JABSCO
JAB17370-0001	8927570	814	DETROIT D.
JAB17370-0001	3N4859	788	CATERPIL.
JAB17370-0001		786	CATERPIL.
JAB17370-0001		858-860	JABSCO
JAB17937-0001-P	460024	831	PERKINS
JAB17937-0001-P	24880031	831	PERKINS
JAB17937-0001-P	7C3286	788	CATERPIL.
JAB17937-0001-P		823	NANNI D.
JAB17937-0001-P		858-859	JABSCO
JAB17938-0001-P		858-859	JABSCO
JAB17956-0001		858	JABSCO
JAB18777-0001-P		858-859	JABSCO
JAB18786-0001	23502086	814	DETROIT D.
JAB18786-0001	7E3022	788	CATERPIL.
JAB18786-0001		858-860	JABSCO
JAB18789-0001		858-859	JABSCO
JAB3085-0001		858	JABSCO
JAB30919-0001		858	JABSCO
JAB4527-0001		858	JABSCO
JAB5616-0001		858	JABSCO
JOH09-1026B	24880194	831	PERKINS
JOH09-1026B		859	JABSCO
JOH09-1027B	460038	831	PERKINS
JOH09-1027B	24880190	831	PERKINS
JOH09-1027B	08-21-1201	827	ONAN
JOH09-1027B	131-0050	827	ONAN
JOH09-1027B	132-0162	827	ONAN
JOH09-1027B	351.11.008	843	SOLE D.
JOH09-1027B	IMP00201	844	VETUS
JOH09-1027B		822	MASE
JOH09-1027B		823	NANNI D.
JOH09-1027B		832	PERKINS
JOH09-1027B		834	PLEASUREC.
JOH09-1027B		859	JABSCO
JOH09-1028B	5193602	814	DETROIT D.
JOH09-1028B	5196629	814	DETROIT D.
JOH09-1028B	5199148	814	DETROIT D.
JOH09-1028B	347.11.008	843	SOLE D.
JOH09-1028B	3N1906	788	CATERPIL.
JOH09-1028B	50.06506.0091	821	MAN
JOH09-1028B	50.06506.0091	823	NANNI D.
JOH09-1028B	IMP00301	844	VETUS
JOH09-1028B	RC320D	842	RENAULT C.
JOH09-1028B		859	JABSCO
JOH09-1029B	460027	831	PERKINS
JOH09-1029B	5193553	814	DETROIT D.
JOH09-1029B	1L4774	788	CATERPIL.
JOH09-1029B		859	JABSCO
JOH09-801B		860	JABSCO
JOH09-802B		816	INDMAR
JOH09-802B		859	JABSCO
JOH09-806B	24880272	831	PERKINS
JOH09-806B	132-0859	827	ONAN
JOH09-806B	132B59	827	ONAN
JOH09-806B		859	JABSCO
JOH09-808B	434013	823	NANNI D.
JOH09-808B		822	MASE
JOH09-808B		859	JABSCO
JOH09-810B	37431	846	WESTERB.
JOH09-810B	48080	846	WESTERB.
JOH09-810B	434014	823	NANNI D.
JOH09-810B	STM8061	844	VETUS
JOH09-810B		822	MASE
JOH09-810B		859	JABSCO
JOH09-812B		822	MASE
JOH09-812B		859	JABSCO
JOH09-814B	5196168	814	DETROIT D.
JOH09-814B	4L8470	788	CATERPIL.
JOH09-814B	50.06506.0089	821	MAN
JOH09-814B	50.06506.0089	823	NANNI D.
JOH09-814B		821	MAN
JOH09-814B		859	JABSCO
JOH09-819B	8924838	814	DETROIT D.
JOH09-819B	5N9360	788	CATERPIL.
JOH09-819B		859	JABSCO
JOH09-820B	51.06505.0106	821	MAN
JOH09-820B	51.06506.0106	823	NANNI D.
JOH09-820B		859	JABSCO
JOH09-821B	51.06505.0103	821	MAN
JOH09-821B	51.06506.0103	823	NANNI D.
JOH09-821B		859	JABSCO
JOH09-842B	51.06505.0127	821	MAN
JOH09-842B		859	JABSCO
M			
MAG15-803		808	CRUSADER
MAG15-803		818	INDMAR
MAG15-809		818	INDMAR
MAG15-809		839	PLEASUREC.
MAR345	3776F024	829	PERKINS
MAR906	135616660	829	PERKINS

REF	OEM		
MAS011943		822	MASE
MAS013432		822	MASE
MAS014020		822	MASE
MAS018807		822	MASE
MAS025222		822	MASE
MAS027318		822	MASE
MAS11885		822	MASE
MAS30253		822	MASE
MAS31004		822	MASE
MAS70196		822	MASE
MAS71008		822	MASE
MAS71110		822	MASE
MAS71166		822	MASE
MAS71183		822	MASE
MAS71204		822	MASE
MAS71270		822	MASE
MAS71365		822	MASE
MAS80159		822	MASE
MAS910141		822	MASE
MAS910207		822	MASE
MAS910208		822	MASE
MAS910604		822	MASE
MAS911450		822	MASE
MAS911730		822	MASE
MAS912163		822	MASE
MAS912168		822	MASE
MAS912277		822	MASE
MAS912357		822	MASE
MAS912422		822	MASE
MAS912423		822	MASE
MAS913347		822	MASE
MAS913348		822	MASE
MAS913354		822	MASE
MAS92682		822	MASE
MAS92892		822	MASE
MAS92958		822	MASE
MAS97536		822	MASE
O			
OSC0959	1650-05944	790	CHRIS-C.
OSC7169-MK		798	CRUSADER
OSC7387	97387	798	CRUSADER
OSC7624	97624	798	CRUSADER
OSC7772-MK		798	CRUSADER
OSC8128-MK		797	CRUSADER
OSC8243-MK		797	CRUSADER
OSC9015G		797	CRUSADER
OSC994-MK		816	INDMAR
R			
RACR12		830	PERKINS
REC016940	879194241	815	HURT
REC016940	8791014241	815	HURT
REC016940	35-813405	815	HURT
REC016940	35-813405A1	815	HURT
REC016940	35-815419	815	HURT
REC016940	F19608751	815	HURT
REC016940	FFF001138	815	HURT
REC08000K	359978	819	KOHLER
REC08000K	132-0407	827	ONAN
REC08000K	132-0415	827	ONAN
REC08000K		826	ONAN
REC08000K		860	JABSCO
REC08000K		820-821	KOHLER
REC09-820B		859	JABSCO
REC09000K	229826	819	KOHLER
REC09000K	302875	846	WESTERB.
REC09000K		846	WESTERB.
REC09000K		860	JABSCO
REC09000K		820-820-821	KOHLER
REC09140	NA001175	831-832	PERKINS
REC0985964		840	PLEASUREC.
REC10-24569-01	42026	846	WESTERB.
REC10-24569-01	55624	846	WESTERB.
REC10-24569-01	10-24569-01	846	WESTERB.
REC10-24569-01		822	MASE
REC10-24570-01	20639	822	MASE
REC10-24570-01	10-24570-01	822	MASE
REC10-24571-01	20291	814	FISHER P.
REC10-24571-01	20291	822	MASE
REC10-24571-01	10-24571-01	814	FISHER P.
REC10-24571-01	10-24571-01	822	MASE
REC10-35127-3	060-068-0-0-B	814	FISHER P.
REC10-35127-3	10-35127-3	814	FISHER P.
REC10-35127-3	FP1-000410	814	FISHER P.
REC10-35127-3	IC36.03.01.007H	814	FISHER P.
REC10077K	11764	846	WESTERB.
REC10077K	33100	846	WESTERB.
REC10077K	727103	800	CRUSADER
REC10077K	132-0375	827	ONAN
REC10077K	132-0498	827	ONAN
REC10077K		814	FISHER P.
REC10077K		820	KOHLER
REC10077K		825-826-828	ONAN
REC10077K		847-848	WESTERB.

REF	OEM		
REC10615K	13930	846	WESTERB.
REC10615K	20300	800	CRUSADER
REC10615K	20310	800	CRUSADER
REC10615K	3908220	811	CUMMINS
REC10615K	132-0292	827	ONAN
REC10615K	132-0348	827	ONAN
REC10615K	132-0349	827	ONAN
REC10615K	NA900012	831	PERKINS
REC10615K	R061017	799-800	CRUSADER
REC10615K		820	KOHLER
REC10615K		860	JABSCO
REC10615K		809-811	CUMMINS
REC10615K		825-826-827	ONAN
REC1140639		830	PERKINS
REC119305-35151		822	MASE
REC11979-0001		859	JABSCO
REC119802-55810		822	MASE
REC12-835467Q01	R096116	841	PLEASUREC.
REC120		830	PERKINS
REC1220550	122-0550	825	ONAN
REC1220602	1220602	824	ONAN
REC1220716712	122.0716.712	825	ONAN
REC1220810	1220810	825	ONAN
REC1220810	122-0810	825	ONAN
REC1220810		828	ONAN
REC12532	16.69-00100	793	CHRIS-C.
REC12532	16.69-00100	804	CRUSADER
REC12532	FI6900165	793	CHRIS-C.
REC12532	FI6900165	804	CRUSADER
REC12644A1		790	CHRIS-C.
REC12644A1		799	CRUSADER
REC12644A1		832	PLEASUREC.
REC128000-5720	128000-5720	789	CATERPIL.
REC129150-35153		822	MASE
REC129470-55703		822	MASE
REC129612-42290E		822	MASE
REC13554-0001		859	JABSCO
REC1396-4148	RN0116	836	PLEASUREC.
REC1396-4148	RN0116-2	836	PLEASUREC.
REC1396-4656	RN0116	835	PLEASUREC.
REC1396-4656	RN0116-2	835	PLEASUREC.
REC1396-5238	RN0118	835	PLEASUREC.
REC1396-5238	RN0120	835	PLEASUREC.
REC1397-2060	45303	802-803	CRUSADER
REC1397-2060		792	CHRIS-C.
REC1397-2060		802	CRUSADER
REC1397-3327		792	CHRIS-C.
REC1397-3327		802-803	CRUSADER
REC1463-9382	37068	795	CHRIS-C.
REC1463-9382	37068	807	CRUSADER
REC1463-9382	51080	795	CHRIS-C.
REC1463-9382	51080	807	CRUSADER
REC1463-9382	R117001	839	PLEASUREC.
REC1463-9382		817	INDMAR
REC149-0428	149-0428	824-828	ONAN
REC149-2106	149-2106	824	ONAN
REC149-2106	A026K278	828	ONAN
REC149-2106		828	ONAN
REC1491754	1491754	824	ONAN
REC1491758	1491758	824	ONAN
REC1492250I	1492250	824	ONAN
REC1492251II	1492251 II	824	ONAN
REC15-401		818	INDMAR
REC15-405		818	INDMAR
REC15-601		808	CRUSADER
REC15-601		818	INDMAR
REC15-602		818	INDMAR
REC15-604		808	CRUSADER
REC15-604		818	INDMAR
REC15-604		839	PLEASUREC.
REC15-801		808	CRUSADER
REC15-801		818	INDMAR
REC15-801		839	PLEASUREC.
REC15-805		808	CRUSADER
REC15-806		818	INDMAR
REC15-806		839	PLEASUREC.
REC15000K	3349198	811	CUMMINS
REC15000K	3916720	811	CUMMINS
REC15000K		860	JABSCO
REC15000K		810-811	CUMMINS
REC17000K	3802444	811	CUMMINS
REC17000K	3897337	811	CUMMINS
REC17000K	3916852	811	CUMMINS
REC17000K	3925236	811	CUMMINS
REC17000K	1W5664	788	CATERPIL.
REC17000K	7E0321	788	CATERPIL.
REC17000K		786	CATERPIL.
REC17000K		860	JABSCO
REC17000K		809-810-811	CUMMINS
REC17010	33408	795	CRUSADER
REC17030	6269577	832	PLEASUREC.
REC17030	7057500	795	CRUSADER
REC17030	16.50-00250	790	CHRIS-C.
REC17040	30266	795	CRUSADER

REF	OEM		
REC17042	31136	795	CRUSADER
REC17046	16.50-00259	790	CHRIS-C.
REC17048	31137	795	CRUSADER
REC17177A1	37061	806	CRUSADER
REC17177A1		794	CHRIS-C.
REC17177A1		838	PLEASUREC.
REC17310	33393	796	CRUSADER
REC17370-0001	8927570	814	DETROIT D.
REC17370-0001		860	JABSCO
REC17920	97686	796	CRUSADER
REC17930	91351	796	CRUSADER
REC17937-0001	460024	831	PERKINS
REC17937-0001	24880031	831	PERKINS
REC17937-0001		823	NANNI D.
REC17937-0001		859	JABSCO
REC17937-0001		813-814	DETROIT D.
REC18-5295		839	PLEASUREC.
REC18-8112		800	CRUSADER
REC18-8114		792	CHRIS-C.
REC18-8114		802	CRUSADER
REC18-8114		816	INDMAR
REC18-8115		792	CHRIS-C.
REC18-8115		802	CRUSADER
REC18-8115		816	INDMAR
REC18000K	1095324	788	CATERPIL.
REC18000K	1095327	788	CATERPIL.
REC18000K	1230492	788	CATERPIL.
REC18000K	1237985	788	CATERPIL.
REC18000K	4019403	811	CUMMINS
REC18000K	4933743	811	CUMMINS
REC185-2133	185-2133	825	ONAN
REC1855835	1855835	824	ONAN
REC1855835	185-5835	824	ONAN
REC1855835		814	FISHER P.
REC1855835		828	ONAN
REC1870014	187.0014	825	ONAN
REC18786-0001	23502086	813	DETROIT D.
REC18786-0001		859-860	JABSCO
REC21213660	252882	820	KOHLER
REC21213660	460038	831	PERKINS
REC21213660	24880190	831	PERKINS
REC21213660	08-21-1201	827	ONAN
REC21213660	131-0050	827	ONAN
REC21213660	132-0162	827	ONAN
REC21213660	351.11.008	843	SOLE D.
REC21213660	IMP00201	844	VETUS
REC21213660		787	CATERPIL.
REC21213660		814	FISHER P.
REC21213660		816	INDMAR
REC21213660		822	MASE
REC21213660		823	NANNI D.
REC21213660		832	PERKINS
REC21213660		859	JABSCO
REC21213664		859	JABSCO
REC21302969	185086610	832	PERKINS
REC21302969	185086620	832	PERKINS
REC21323043	185086600	832	PERKINS
REC21323043	163-3361	789	CATERPIL.
REC21622232		838	PLEASUREC.
REC21707134	1R-0658	785	CATERPIL.
REC21730344	50.06506.0089	823	NANNI D.
REC21730344	5N9360	788	CATERPIL.
REC22000K		860	JABSCO
REC22040-0701S	65.00600.0016	821	MAN
REC22120-0001		859	JABSCO
REC22779-0001	229955	820	KOHLER
REC22779-0001	250872	820	KOHLER
REC22779-0001	IMP00101	844	VETUS
REC22779-0001		860	JABSCO
REC22779-0001		820-821	KOHLER
REC229678	229678	818	KOHLER
REC23-3666		819	KOHLER
REC23-99291	R094020A	841	PLEASUREC.
REC23535447	23525200	813	DETROIT D.
REC23535447	23535477	813	DETROIT D.
REC252898	252898	819-820	KOHLER
REC2656613		830	PERKINS
REC26901		794	CHRIS-C.
REC26901		807	CRUSADER
REC26901		839	PLEASUREC.
REC26904		794	CHRIS-C.
REC26904		807	CRUSADER
REC26904		839	PLEASUREC.
REC26905		794	CHRIS-C.
REC26905		807	CRUSADER
REC26905		807	CRUSADER
REC26905		839	PLEASUREC.
REC27-14250	20129	796	CRUSADER
REC27-33395	96306	797	CRUSADER
REC27-33395	CHV-47-000	833	PLEASUREC.
REC27-34213	3705042	835	PLEASUREC.
REC27-34213	16.50-00074	791	CHRIS-C.
REC27-344861	16.50-00162	794	CHRIS-C.
REC27-34897	16.50-00078	790	CHRIS-C.
REC27-34898	16.50-005756	791	CHRIS-C.
REC27-99757	97498	797	CRUSADER

REF	OEM		
REC27000K	3974456	811	CUMMINS
REC27000K		846	WESTERB.
REC27000K		860	JABSCO
REC29000K		811	CUMMINS
REC29000K		860	JABSCO
REC29000K		786-787	CATERPIL.
REC29350-1001	GM58527	819	KOHLER
REC29350-1001	M20	830	PERKINS
REC296TWIN		830	PERKINS
REC300-00879		795	CHRIS-C.
REC300-00879		807	CRUSADER
REC300-00879		839	PLEASUREC.
REC300-0539	1W6586	785	CATERPIL.
REC300-0539	8N2250	785	CATERPIL.
REC32-86036	R085035	841	PLEASUREC.
REC3302-9031		802-803	CRUSADER
REC33662	41057	793	CHRIS-C.
REC33662	41057	805	CRUSADER
REC33662	705787	805	CRUSADER
REC33662	755017	817	INDMAR
REC33662	16.69-00050	793	CHRIS-C.
REC33662	R115002	837	PLEASUREC.
REC33706	12526	805	CRUSADER
REC33706		793	CHRIS-C.
REC33708	12528	804	CRUSADER
REC33765T		792	CHRIS-C.
REC33765T		804	CRUSADER
REC34235T	16.69-00049	793	CHRIS-C.
REC34235T		805	CRUSADER
REC3423A1		794	CHRIS-C.
REC3423A1		806	CRUSADER
REC344085	344085	819	KOHLER
REC344085	344371	819	KOHLER
REC34765A2		790	CHRIS-C.
REC34765A2		799	CRUSADER
REC34765A2		832	PLEASUREC.
REC35-06003	201104	801	CRUSADER
REC35-06003	16.81-08746	791	CHRIS-C.
REC35-06003	R077002	835	PLEASUREC.
REC35-06003		825	ONAN
REC35-06007	9002514	801	CRUSADER
REC35-06007	1R-16.81-06536	791	CHRIS-C.
REC35-06007	R077001	835	PLEASUREC.
REC35-816168	2654347	829	PERKINS
REC35-816168	2654407	829	PERKINS
REC35-8M0061975	98041	801	CRUSADER
REC3517857		801	CRUSADER
REC3517857		835	PLEASUREC.
REC3517857		842	RENAULT C.
REC35595	35595	845-847-848	WESTERB.
REC3581078	2656017	830	PERKINS
REC3586494	24880272	831	PERKINS
REC3586494		827	ONAN
REC3586494		859	JABSCO
REC3586496	434013	823	NANNI D.
REC3586496		814	FISHER P.
REC3586496		847	WESTERB.
REC3586496		848	WESTERB.
REC3586496		859	JABSCO
REC3593573	3N5895	788	CATERPIL.
REC3593573		859	JABSCO
REC3593659	24880194	831	PERKINS
REC3593659		859	JABSCO
REC3604654RX	3604654RX	812	CUMMINS
REC36450	36450	845-847-848	WESTERB.
REC36918	36918	845	WESTERB.
REC36918		820	KOHLER
REC36918		847-848	WESTERB.
REC3841697	5193602	814	DETROIT D.
REC3841697	5196629	814	DETROIT D.
REC3841697	5199148	814	DETROIT D.
REC3841697	347.11.008	843	SOLE D.
REC3841697	3N1906	788	CATERPIL.
REC3841697	50.06506.0091	821	MAN
REC3841697	50.06506.0091	823	NANNI D.
REC3841697	IMP00301	844	VETUS
REC3841697	RC320D	842	RENAULT C.
REC3841697		859	JABSCO
REC3841697		820-821	KOHLER
REC3843751	R084003	836	PLEASUREC.
REC3850397	47002	803	CRUSADER
REC3850559	201104	801	CRUSADER
REC3850559		792	CHRIS-C.
REC3850559		835	PLEASUREC.
REC3852455	RM0007	833	PLEASUREC.
REC3852455		797	CRUSADER
REC3853796	RA057004	833	PLEASUREC.
REC3853796		799	CRUSADER
REC3853801	41074	805	CRUSADER
REC3853801	41089	805	CRUSADER
REC3853801	R103004	837	PLEASUREC.
REC3853801		793	CHRIS-C.
REC3853839	R130001	841	PLEASUREC.

REF	OEM		
REC3854001		807	CRUSADER
REC3854002	7243200	807	CRUSADER
REC3854003	7243110	807	CRUSADER
REC3854161	3854161	807	CRUSADER
REC3854190	987811	840	PLEASUREC.
REC3854190	RA122001	840	PLEASUREC.
REC3854190	RK122014	840	PLEASUREC.
REC3854260		804	CRUSADER
REC3854261	3854261	805	CRUSADER
REC3854286	11418	846	WESTERB.
REC3854286	11907	846	WESTERB.
REC3854286	22212	800	CRUSADER
REC3854286	33104	846	WESTERB.
REC3854286	1003026	800	CRUSADER
REC3854286	24880178	831	PERKINS
REC3854286	132-0117	827	ONAN
REC3854286	132-0317	827	ONAN
REC3854286	NA900010	831	PERKINS
REC3854286		790	CHRIS-C.
REC3854286		820	KOHLER
REC3854286		825	ONAN
REC3854286		860	JABSCO
REC3854286		846-847-848	WESTERB.
REC3854311	20223	805	CRUSADER
REC3854331		804	CRUSADER
REC3854548	38070	804	CRUSADER
REC3854549	38071	805	CRUSADER
REC3855194	47033	803	CRUSADER
REC3855276	981650	800	CRUSADER
REC3860171		841	PLEASUREC.
REC3860703	40070	799	CRUSADER
REC3860703	685011	816	INDMAR
REC3860703	RA057023	834	PLEASUREC.
REC3860703	RA057026	834	PLEASUREC.
REC3860769		841	PLEASUREC.
REC3861267	R117012	839	PLEASUREC.
REC3887761		859	JABSCO
REC391-5090	20117	805	CRUSADER
REC391-5090	16.69-00039	793	CHRIS-C.
REC391-5090	R114001	837	PLEASUREC.
REC391-5090	R114004	837	PLEASUREC.
REC391-5090Q1		794	CHRIS-C.
REC391-5090Q1		806	CRUSADER
REC391-5090Q1		838	PLEASUREC.
REC3916854	3904445	812	CUMMINS
REC3916854	3916854	812	CUMMINS
REC392-6316	RA107001	838	PLEASUREC.
REC392-6316		806	CRUSADER
REC392-6324Q1		794	CHRIS-C.
REC392-6324Q1		806	CRUSADER
REC392-6324Q1		838	PLEASUREC.
REC392-6325Q1		806	CRUSADER
REC392-6330		838	PLEASUREC.
REC392-9086T	41069	804	CRUSADER
REC392-9086T		837	PLEASUREC.
REC392-9766	41076	804	CRUSADER
REC392-9766	45334	792	CHRIS-C.
REC392-9766	RA108003	836	PLEASUREC.
REC3922122	3922122	809	CUMMINS
REC3922122	4019951	809	CUMMINS
REC3922122	4020066	809	CUMMINS
REC393-4988	3000121	804	CRUSADER
REC393-4988		837	PLEASUREC.
REC393-9459Q1	16.69-00052	793	CHRIS-C.
REC3N4851	3N4851	786	CATERPIL.
REC425-5421	4255421	787	CATERPIL.
REC425-5421	425-5421	787	CATERPIL.
REC4598-0001		860	JABSCO
REC46-8M0113734	20318	799	CRUSADER
REC46-8M0113734	7142520	799	CRUSADER
REC46-8M0113734	RA057018	834	PLEASUREC.
REC46-8M0113735	17670	799	CRUSADER
REC46-8M0113735	30103	799	CRUSADER
REC46-8M0113735	67859	799	CRUSADER
REC46-8M0113735	811573	799	CRUSADER
REC46-8M0113735	RA057019	833	PLEASUREC.
REC47-43026Q02		860	JABSCO
REC47-59362Q01		860	JABSCO
REC47-809866T		859	JABSCO
REC47-862232A2		860	JABSCO
REC47-89984T4		860	JABSCO
REC48080	33636	846	WESTERB.
REC48080	37431	846	WESTERB.
REC48080	48080	846	WESTERB.
REC50-808011A05	42091	808	CRUSADER
REC50-808011A05	1109485	808	CRUSADER
REC50-808011A05	9000888	808	CRUSADER
REC50-808011A05	19010615	808	CRUSADER
REC50-808011A05	RA122009	808	CRUSADER
REC50-808011A05	RA122009	840	PLEASUREC.
REC50-808011A05		817	INDMAR
REC50-863007A1	RA122015	808	CRUSADER
REC50-863007A1		840	PLEASUREC.
REC50-97499A2	33486	845	WESTERB.
REC50-97499A2	42090	808	CRUSADER

REF	OEM		
REC50-97499A2	573001	817	INDMAR
REC50-97499A2	1109484	808	CRUSADER
REC50-97499A2	9000888	840	PLEASUREC.
REC50-97499A2	19010617	808	CRUSADER
REC50-97499A2	RA122008	808	CRUSADER
REC50-97499A2	RA122008	840	PLEASUREC.
REC50-99417A2	16.61-0042	795	CHRIS-C.
REC50-99417A2	16.61-0043	795	CHRIS-C.
REC50-99418A2	1109482	808	CRUSADER
REC50-99418A2		840	PLEASUREC.
REC502900	279449	818-821	KOHLER
REC5145578	5145576	813	DETROIT D.
REC5145578	5145577	813	DETROIT D.
REC5145578	5145578	813	DETROIT D.
REC5197221	5197221	813	DETROIT D.
REC575010	575010	817	INDMAR
REC575010	RA097007	841	PLEASUREC.
REC575011	575011	817	INDMAR
REC575011	RA097007	841	PLEASUREC.
REC58033	3000124	805	CRUSADER
REC58217	16.69-00051	793	CHRIS-C.
REC58217		805	CRUSADER
REC5N9357	5N9357	786	CATERPIL.
REC62092T	40050	835	PLEASUREC.
REC62092T	982063	800	CRUSADER
REC64851	1869704	793	CHRIS-C.
REC64851		837	PLEASUREC.
REC653-0001	37431	846	WESTERB.
REC653-0001	48080	846	WESTERB.
REC653-0001	434014	823	NANNI D.
REC653-0001	STM8061	844	VETUS
REC653-0001		814	FISHER P.
REC653-0001		822	MASE
REC653-0001		847	WESTERB.
REC653-0001		859	JABSCO
REC65864	3000122	805	CRUSADER
REC6760-0001		859	JABSCO
REC69729	RA097002	840	PLEASUREC.
REC69729	RA097003	840	PLEASUREC.
REC69729	RA097006	840	PLEASUREC.
REC71831		837	PLEASUREC.
REC76270T	96358	801	CRUSADER
REC777128		859-860	JABSCO
REC7C3613	7C3613	786	CATERPIL.
REC7C3614	7C3614	786	CATERPIL.
REC805222A1	RA107039E	806	CRUSADER
REC805222A1	RA107039E	838	PLEASUREC.
REC805298A1	33628	803	CRUSADER
REC806612T	R020027	836	PLEASUREC.
REC807653T		812	CUMMINS
REC807964A1		806	CRUSADER
REC807964A1		838	PLEASUREC.
REC817377		806	CRUSADER
REC823426A1	45334	792	CHRIS-C.
REC823426A1	45334	802	CRUSADER
REC823427A1		792	CHRIS-C.
REC823427A1		802	CRUSADER
REC82745		833	PLEASUREC.
REC834337	359771	818-821	KOHLER
REC834975	41059	805	CRUSADER
REC834975	R103003	837	PLEASUREC.
REC834975		793	CHRIS-C.
REC834975		817	INDMAR
REC835702	18-5399	792	CHRIS-C.
REC835702	RA108002	836	PLEASUREC.
REC835702		804	CRUSADER
REC836-0001	460027	831	PERKINS
REC836-0001	5193553	814	DETROIT D.
REC836-0001	1L4774	788	CATERPIL.
REC836-0001		859	JABSCO
REC841243	12531	805	CRUSADER
REC841243	1003318	805	CRUSADER
REC841243	16.69-00042	793	CHRIS-C.
REC841994		802	CRUSADER
REC847741	1R-0714	785	CATERPIL.
REC855694	1004-650-006	779	BORG-W.
REC85785A2	97214	803	CRUSADER
REC85785A2	97595	803	CRUSADER
REC861907		829	PERKINS
REC86234A4		791	CHRIS-C.
REC873770	48200932	823	NANNI D.
REC875575		860	JABSCO
REC875697	460027	831	PERKINS
REC875697	5196168	814	DETROIT D.
REC875697	4L8470	788	CATERPIL.
REC875697	50.06506.0089	821	MAN
REC875697		859	JABSCO
REC879194371	882481	828	ONAN
REC879194371	889903	828	ONAN
REC879194371	879194371	828	ONAN
REC879194371	185-2166	828	ONAN
REC882571	882571	812	CUMMINS
REC882571	8M0084523	812	CUMMINS
REC888596		829	PERKINS
REC8923363	8923363	813	DETROIT D.
REC8923363	23507475	813	DETROIT D.

REF	OEM		
REC8923363	23507476	813	DETROIT D.
REC8923363	23507477	813	DETROIT D.
REC8923363	23507973	813	DETROIT D.
REC89260		790	CHRIS-C.
REC89260		799	CRUSADER
REC89260		832	PLEASUREC.
REC892615002	R020035A	836	PLEASUREC.
REC8927296	18780	813	DETROIT D.
REC8927296	8927296	813	DETROIT D.
REC897367	R096081	841	PLEASUREC.
REC898253013	R103011	837	PLEASUREC.
REC89825302	20223	805	CRUSADER
REC89825302	16.69-00149	793	CHRIS-C.
REC89825302	R103001	837	PLEASUREC.
REC898253T22	RA108009	837	PLEASUREC.
REC8HC2023K	796351	789	CATERPIL.
REC8M0068784	700425	803	CRUSADER
REC8M0068784	RO200001	836	PLEASUREC.
REC8M0089715	R026002E	834	PLEASUREC.
REC8M0091470	97895	801	CRUSADER
REC8M0125617	47032	803	CRUSADER
REC8M0148530		849	SHERWOOD
REC8M6001217	12530	805	CRUSADER
REC8M6001217	16.69-00040	793	CHRIS-C.
REC8M6001217	R115001	837	PLEASUREC.
REC8M6001219	41058	805	CRUSADER
REC8M6001219	751007	816	INDMAR
REC8M6001219	R114002	837	PLEASUREC.
REC8M6001219		793	CHRIS-C.
REC8M6001249		793	CHRIS-C.
REC8M6001249		805	CRUSADER
REC8M6001249		837	PLEASUREC.
REC8N2250	1W6586	785	CATERPIL.
REC8N2250	8N2250	785	CATERPIL.
REC90301-ZW1-003	R017066	841	PLEASUREC.
REC90508-ZW1-003	R096117	841	PLEASUREC.
REC93568		802	CRUSADER
REC96562	96562	798	CRUSADER
REC97258A1	700427	803	CRUSADER
REC97361	97361	801	CRUSADER
REC97361	RP026002E	834	PLEASUREC.
REC982209	20222	804	CRUSADER
REC982209	16.69-00148	792	CHRIS-C.
REC982209	R08001	837	PLEASUREC.
REC982230	91606	801	CRUSADER
REC98243	98243	797	CRUSADER
RECDF238-M1		789	CATERPIL.
RECDF4408-4		789	CATERPIL.
RECDF477-M-3		809	CUMMINS
RECFF143		842	RENAULT C.
RECFF346		842	RENAULT C.
RECFF425		842	RENAULT C.
RECFF436		842	RENAULT C.
RECFF477		842	RENAULT C.
RECFF536		842	RENAULT C.
RECG1010	132-0343	826	ONAN
RECG1010	132-0347	826	ONAN
RECG1010	132-0356	826	ONAN
RECG1010	132-0413	826	ONAN
RECG1010	A029U129	826	ONAN
RECG1010	G1010	826	ONAN
RECG1010	G1010-1	826	ONAN
RECG1010		851	SHERWOOD
RECG1012	132-0464	827	ONAN
RECG1012	A032Y747	826	ONAN
RECG1012	G1009	827	ONAN
RECG1012	G1012	826	ONAN
RECG2904X	123-0471	787	CATERPIL.
RECG2904X	197-1328	787	CATERPIL.
RECG3001X	147-7850	787	CATERPIL.
RECG3001X	212-7264	787	CATERPIL.
RECG3001X	322-8594	787	CATERPIL.
RECG702	132-0358	826	ONAN
RECG702	132-0379	826	ONAN
RECG702	132-0459	826	ONAN
RECG702	G701	826	ONAN
RECG702	G702	826	ONAN
RECG702		849	SHERWOOD
RECG8002	132-0395	826	ONAN
RECG8002	132-0415	826	ONAN
RECG8002	132-0430	826	ONAN
RECG8002	G8002	826	ONAN
RECG8002		849	SHERWOOD
RECG908	302648	846	WESTERB.
RECG908	302837	846	WESTERB.
RECG908	G903	846	WESTERB.
RECG908	G908	846	WESTERB.
RECGM46936	GM46936	819	KOHLER
RECP1014	40050	799	CRUSADER
RECP1014	40050	834	PLEASUREC.
RECP1014	RA057031	799	CRUSADER
RECP1014		850	SHERWOOD
RECP1716C	3919899	810	CUMMINS
RECP1716C	3922590	810	CUMMINS
RECP1716C		849	SHERWOOD
RECP1722C	3912139	809	CUMMINS

REF	OEM		
RECP1722C	3922589	809	CUMMINS
RECP1722C	3964989	809	CUMMINS
RECP1722C		849	SHERWOOD
RECRA122002		840	PLEASUREC.
RM841812		823	NANNI D.
RM861906	135616660	829	PERKINS
RM841812		822	NANNI D.
RM861906	135616660	828	PERKINS

S

SED3092200		829	PERKINS
SED3092201		829	PERKINS
SHE08000K	359978	820	KOHLER
SHE08000K	132-0407	827	ONAN
SHE08000K	132-0415	827	ONAN
SHE08000K		860	JABSCO
SHE08000K		849-852-855	SHERWOOD
SHE09000K	229826	820	KOHLER
SHE09000K	302875	846	WESTERB.
SHE09000K		827	ONAN
SHE09000K		860	JABSCO
SHE09000K		852-855	SHERWOOD
SHE09959K	11418	846	WESTERB.
SHE09959K	11907	846	WESTERB.
SHE09959K	33104	846	WESTERB.
SHE09959K	1003026	800	CRUSADER
SHE09959K	24880178	831	PERKINS
SHE09959K	132-0117	827	ONAN
SHE09959K	132-0317	827	ONAN
SHE09959K	16.80-90049	791	CHRIS-C.
SHE09959K	16.80-90166	791	CHRIS-C.
SHE09959K	NA900010	831	PERKINS
SHE09959K	RP061015	834	PLEASUREC.
SHE09959K		820	KOHLER
SHE09959K		827	ONAN
SHE09959K		832	PERKINS
SHE09959K		834	PLEASUREC.
SHE09959K		860	JABSCO
SHE09959K		850-851-852-855-856	SHERWOOD
SHE10077K	11764	846	WESTERB.
SHE10077K	33100	846	WESTERB.
SHE10077K	132-0375	827	ONAN
SHE10077K	132-0498	827	ONAN
SHE10077K	16.80-90047	791	CHRIS-C.
SHE10077K		820	KOHLER
SHE10077K		827	ONAN
SHE10077K		860	JABSCO
SHE10077K		849-855	SHERWOOD
SHE10615K	13930	846	WESTERB.
SHE10615K	20300	800	CRUSADER
SHE10615K	20310	800	CRUSADER
SHE10615K	3908220	811	CUMMINS
SHE10615K	132-0292	827	ONAN
SHE10615K	132-0348	827	ONAN
SHE10615K	132-0349	827	ONAN
SHE10615K	16.80-90131	791	CHRIS-C.
SHE10615K	NA900012	831-832	PERKINS
SHE10615K	R061017	800	CRUSADER
SHE10615K	RP061017	834	PLEASUREC.
SHE10615K		820	KOHLER
SHE10615K		827	ONAN
SHE10615K		832	PERKINS
SHE10615K		834	PLEASUREC.
SHE10615K		860	JABSCO
SHE10615K		810-811	CUMMINS
SHE10615K		849-850-851-855-856	SHERWOOD
SHE10927	20309	800	CRUSADER
SHE11068		799	CRUSADER
SHE11068		832	PERKINS
SHE11068		849-856	SHERWOOD
SHE12221		832	PERKINS
SHE12221		851-856	SHERWOOD
SHE12665		790	CHRIS-C.
SHE12665		827	ONAN
SHE12665		850-851-856	SHERWOOD
SHE12859	40057	800	CRUSADER
SHE12937		852-856	SHERWOOD
SHE15000K	3349198	811	CUMMINS
SHE15000K	3916720	811	CUMMINS
SHE15000K		860	JABSCO
SHE15000K		810-811	CUMMINS
SHE15000K		849-851-855	SHERWOOD
SHE17000K	3802444	811	CUMMINS
SHE17000K	3897337	811	CUMMINS
SHE17000K	3916852	811	CUMMINS
SHE17000K	3925236	811	CUMMINS
SHE17000K	1W5664	788	CATERPIL.
SHE17000K	7E0321	788	CATERPIL.
SHE17000K		860	JABSCO
SHE17000K		786-787	CATERPIL.

REF	OEM		
SHE17000K		849-850-855	SHERWOOD
SHE18000K	4019403	811	CUMMINS
SHE18000K	4933743	811	CUMMINS
SHE18000K		814	DETROIT D.
SHE18000K		855	SHERWOOD
SHE18000K		860	JABSCO
SHE19354		856	SHERWOOD
SHE22000K	3N8449	788	CATERPIL.
SHE22000K		855	SHERWOOD
SHE22000K		860	JABSCO
SHE23972		856	SHERWOOD
SHE23973		787	CATERPIL.
SHE23973		850	SHERWOOD
SHE23973		856	SHERWOOD
SHE23974		856	SHERWOOD
SHE23975		787	CATERPIL.
SHE23975		850	SHERWOOD
SHE23975		856	SHERWOOD
SHE23976		811	CUMMINS
SHE23976		827	ONAN
SHE23976		849-850-851-856	SHERWOOD
SHE23977		811	CUMMINS
SHE23977		827	ONAN
SHE23977		851-856	SHERWOOD
SHE23979		790	CHRIS-C.
SHE23979		827	ONAN
SHE23979		850-851-856	SHERWOOD
SHE23980		811	CUMMINS
SHE23980		849-851-856	SHERWOOD
SHE23981		811	CUMMINS
SHE23981		849-851-856	SHERWOOD
SHE24841		811	CUMMINS
SHE24841		851	SHERWOOD
SHE24842		811	CUMMINS
SHE24842		851	SHERWOOD
SHE25017		787	CATERPIL.
SHE25029		850-856	SHERWOOD
SHE25044		811	CUMMINS
SHE25044		851	SHERWOOD
SHE25045		811	CUMMINS
SHE25045		851	SHERWOOD
SHE25105		854	SHERWOOD
SHE25106		854	SHERWOOD
SHE25121		787	CATERPIL.
SHE25121		850	SHERWOOD
SHE25122		811	CUMMINS
SHE25122		849-850	SHERWOOD
SHE25123		787	CATERPIL.
SHE25123		850	SHERWOOD
SHE25124		811	CUMMINS
SHE25124		849-850	SHERWOOD
SHE25125		811	CUMMINS
SHE25125		851	SHERWOOD
SHE25126		811	CUMMINS
SHE25126		851	SHERWOOD
SHE25147		787	CATERPIL.
SHE25147		850	SHERWOOD
SHE25148		787	CATERPIL.
SHE25195		852	SHERWOOD
SHE25196		852	SHERWOOD
SHE26000K	3972366	809-811	CUMMINS
SHE26000K		860	JABSCO
SHE26000K		860	JABSCO
SHE26000K		851-855	SHERWOOD
SHE27000K	3974456	810-811	CUMMINS
SHE27000K		860	JABSCO
SHE27000K		851-855	SHERWOOD
SHE29000K		787	CATERPIL.
SHE29000K		860	JABSCO
SHE29000K		809-811	CUMMINS
SHE29000K		850-851-855	SHERWOOD
SHE30000K		787	CATERPIL.
SHE30000K		855	SHERWOOD
SHE30000K		860	JABSCO
SHE4257	20292	800	CRUSADER
SHEE35	97179	799	CRUSADER
SHEE35		849	SHERWOOD
SHEG1010	132-0343	826	ONAN
SHEG1010	132-0347	826	ONAN
SHEG1010	132-0356	826	ONAN
SHEG1010	132-0413	826	ONAN
SHEG1010		851	SHERWOOD
SHEG1012	132-0464	826	ONAN
SHEG151		849	SHERWOOD
SHEG155		849	SHERWOOD
SHEG21	RA57007	834	PLEASUREC.
SHEG21		850	SHERWOOD
SHEG2603X	3922589	809	CUMMINS
SHEG2603X	3967246	809	CUMMINS
SHEG2603X		811	CUMMINS
SHEG2603X		851	SHERWOOD
SHEG2902X	196-8895	786-787	CATERPIL.
SHEG2902X		850	SHERWOOD
SHEG2903X	3349392	809	CUMMINS
SHEG2903X	4929178	809	CUMMINS
SHEG2903X	5260393	809	CUMMINS
SHEG2903X		811	CUMMINS
SHEG2903X		851	SHERWOOD
SHEG30-2B	16.80-18346	790	CHRIS-C.
SHEG65	NA003335	831-832	PERKINS
SHEG65		851	SHERWOOD
SHEG702	132-0358	825	ONAN
SHEG702	132-0459	825	ONAN
SHEG702		849	SHERWOOD
SHEG8001	132-0275	819	KOHLER
SHEG8001		852	SHERWOOD
SHEG8002	132-0395	826	ONAN
SHEG8002	132-0430	826	ONAN
SHEG8002		849	SHERWOOD
SHEG907P	344085	819	KOHLER
SHEG907P	344371	819	KOHLER
SHEG907P		852	SHERWOOD
SHEG910P	GM46936	819	KOHLER
SHEG910P		852	SHERWOOD
SHEG9901		850	SHERWOOD
SHEG9903		850	SHERWOOD
SHEGC1	3912962	810-811	CUMMINS
SHEGC1		851	SHERWOOD
SHEGC5	39127684	810-811	CUMMINS
SHEGC5		851	SHERWOOD
SHEH5	NA005576	831-832	PERKINS
SHEH5		851	SHERWOOD
SHEK75B	132-0275	825	ONAN
SHEK75B	135-0278	825	ONAN
SHEK75B		851	SHERWOOD
SHEL10B	1320278	825	ONAN
SHEL10B	132-0278	825	ONAN
SHEL10B		851	SHERWOOD
SHEM71	3010336	809	CUMMINS
SHEM71	3278137	809	CUMMINS
SHEM71	3907458	809	CUMMINS
SHEM71	3912019	809	CUMMINS
SHEM71		811	CUMMINS
SHEM71		851	SHERWOOD
SHEP1014	40050	799	CRUSADER
SHEP1014	40050	834	PLEASUREC.
SHEP1014	RA057031	799	CRUSADER
SHEP1014		850	SHERWOOD
SHEP1016	854179001	810	CUMMINS
SHEP1016	879312023	810	CUMMINS
SHEP1016		811	CUMMINS
SHEP1016		849	SHERWOOD
SHEP1710C	4P-7168	786	CATERPIL.
SHEP1710C	7E-3268	786	CATERPIL.
SHEP1710C		787	CATERPIL.
SHEP1710C		850	SHERWOOD
SHEP1716C	3919899	810	CUMMINS
SHEP1716C	3922590	810	CUMMINS
SHEP1716C		811	CUMMINS
SHEP1716C		849	SHERWOOD
SHEP1722C	3912139	809	CUMMINS
SHEP1722C	3922589	809	CUMMINS
SHEP1722C		811	CUMMINS
SHEP1722C		849	SHERWOOD
SHEP1727C	3897194	810	CUMMINS
SHEP1727C		811	CUMMINS
SHEP1727C		850	SHERWOOD
SHEP1730C	3866493	810	CUMMINS
SHEP1730C	3897194	810	CUMMINS
SHEP1730C		811	CUMMINS
SHEP1730C		850	SHERWOOD
SHEP1732C	113-1109	786	CATERPIL.
SHEP1732C	152-8392	786	CATERPIL.
SHEP1732C	170-6116	786	CATERPIL.
SHEP1732C		787	CATERPIL.
SHEP1732C		850	SHERWOOD
SHEP176X	7E.4115	786	CATERPIL.
SHEP176X	9Y-1304	786	CATERPIL.
SHEP176X	FP-7E4115	786	CATERPIL.
SHEP176X		787	CATERPIL.
SHEP176X		850	SHERWOOD
SHEP2708X		851	SHERWOOD
SHEP2708X		810-811	CUMMINS
SHER10870G	11353	846	WESTERB.
SHER10870G		852	SHERWOOD

T

TEN00220	ZINK15C	845	VETUS
TEN00221	ZINK25C	845	VETUS
TEN00222		845	VETUS
TEN00223	ZINK35C	845	VETUS
TEN00400SOLE/1	40030092	843	SOLE D.
TEN00400SOLE/2	50035092	843	SOLE D.
TEN00400SOLE/3	40045092	843	SOLE D.
TEN00400SOLE/4	40050092	843	SOLE D.
TEN00490		843	RENAULT C.
TEN00491		843	RENAULT C.
TEN00492		843	RENAULT C.
TEN00493		843	RENAULT C.
TEN00494		843	RENAULT C.
TEN00495		843	RENAULT C.
TEN01318T	130-4434	827	ONAN
TEN01320T		822	MASE
TEN01801		843	RENAULT C.
TEN01802		843	RENAULT C.
TEN01803		843	RENAULT C.
TEN01804		843	RENAULT C.
TEN02000T		831	PERKINS
TEN02020		788	CATERPIL.
TEN02021	6L2283	788	CATERPIL.
TEN02021/1	116-7011	788	CATERPIL.
TEN02021/1T		788	CATERPIL.
TEN02021T		788	CATERPIL.
TEN02021TP	6L2282	788	CATERPIL.
TEN02022	6L2016	788	CATERPIL.
TEN02022T		788	CATERPIL.
TEN02023	612289	788	CATERPIL.
TEN02023T		788	CATERPIL.
TEN02023TP		788	CATERPIL.
TEN02024	6L2288	788	CATERPIL.
TEN02024T		788	CATERPIL.
TEN02024TP		788	CATERPIL.
TEN02025	6L2284	788	CATERPIL.
TEN02026	6L2286	788	CATERPIL.
TEN02026T		788	CATERPIL.
TEN02026TP		788	CATERPIL.
TEN02027	6L2280	788	CATERPIL.
TEN02027T		788	CATERPIL.
TEN02027TP	6L2279	788	CATERPIL.
TEN02028	7E5076	788	CATERPIL.
TEN02028T		788	CATERPIL.
TEN02028TP		788	CATERPIL.
TEN02029	642281	788	CATERPIL.
TEN02029bis	6L3104	788	CATERPIL.
TEN02029BIS/T		788	CATERPIL.
TEN02029T		788	CATERPIL.
TEN02029TP	6L2279G	788	CATERPIL.
TEN02030		827	ONAN
TEN02031		827	ONAN
TEN02031TP		827	ONAN
TEN02032		827	ONAN
TEN02033		827	ONAN
TEN02040		812	CUMMINS
TEN02040		831	PERKINS
TEN02041		812	CUMMINS
TEN02041		831	PERKINS
TEN02042		812	CUMMINS
TEN02042		831	PERKINS
TEN02043		812	CUMMINS
TEN02043T		812	CUMMINS
TEN02043T		831	PERKINS
TEN02044	68241	812	CUMMINS
TEN02044T		812	CUMMINS
TEN02044T		831	PERKINS
TEN02044TP		812	CUMMINS
TEN02053T		822	MASE
TEN02070T		822	MASE
TEN02090		843	RENAULT C.
TEN02090T		843	RENAULT C.
TEN03500	BP195E	844	VETUS
TEN03500	SET151	844	VETUS
TEN03502	BP129	844	VETUS
TEN03502	SET153	844	VETUS
TEN03503		844	VETUS
TEN03505	BP1221	845	VETUS
TEN03505	SET0148	845	VETUS
TEN03506	BP1126	845	VETUS
TEN03506	SET0149	845	VETUS
TEN03507	BP1185	844	VETUS
TEN03507	SET150	844	VETUS
TEN03508	BP1210	844	VETUS
TEN03508	SET0152	844	VETUS
TEN03509	BP195	844	VETUS
TEN03510	ZINK15SC	844	VETUS
TEN03511	ZINK25SC	844	VETUS
TEN03512		844	VETUS

OEM --> REF

	OEM	REF	
BORG-W.	100-238-002	**ALT023941**	779
BORG-W.	1004-650-001	**ALTDA-101**	779
BORG-W.	1004-650-002	**ALTDA-102**	779
BORG-W.	1004-650-006	**REC855694**	779
BORG-W.	1004-650-007	**ALTDA-107**	779
BORG-W.	1004-650-008	**ALTDA-108**	779
BORG-W.	2001-238-001	**ALT340940**	779
BORG-W.	1308-410-001	**A/P2279**	780
BORG-W.	A4867HA	**A/P2277**	780
CATERPIL.	1R-0658	**REC21707134**	785
CATERPIL.	1R-0714	**REC847741**	785
CATERPIL.	1W6586	**REC300-0539**	785
CATERPIL.	1W6586	**REC8N2250**	785
CATERPIL.	8N2250	**REC300-0539**	785
CATERPIL.	8N2250	**REC8N2250**	785
CATERPIL.	113-1109	**SHEP1732C**	786
CATERPIL.	152-8392	**SHEP1732C**	786
CATERPIL.	170-6116	**SHEP1732C**	786
CATERPIL.	3N4851	**REC3N4851**	786
CATERPIL.	4P-7168	**SHEP1710C**	786
CATERPIL.	5N9357	**REC5N9357**	786
CATERPIL.	7C3613	**REC7C3613**	786
CATERPIL.	7C3614	**REC7C3614**	786
CATERPIL.	7E.4115	**SHEP176X**	786
CATERPIL.	9Y-1304	**SHEP176X**	786
CATERPIL.	FP-7E4115	**SHEP176X**	786
CATERPIL.	4255421	**REC425-5421**	787
CATERPIL.	123-0471	**RECG2904X**	787
CATERPIL.	147-7850	**RECG3001X**	787
CATERPIL.	197-1328	**RECG2904X**	787
CATERPIL.	212-7264	**RECG3001X**	787
CATERPIL.	322-8594	**RECG3001X**	787
CATERPIL.	425-5421	**REC425-5421**	787
CATERPIL.	612289	**TEN02023**	788
CATERPIL.	642281	**TEN02029**	788
CATERPIL.	1095324	**CEF500182G**	788
CATERPIL.	1095324	**REC18000K**	788
CATERPIL.	1095327	**CEF500182G**	788
CATERPIL.	1095327	**REC18000K**	788
CATERPIL.	1230492	**CEF500182G**	788
CATERPIL.	1230492	**REC18000K**	788
CATERPIL.	1237985	**CEF500182G**	788
CATERPIL.	1237985	**REC18000K**	788
CATERPIL.	7E0321	**CEF500164T**	788
CATERPIL.	7E3022	**JAB18786-0001**	788
CATERPIL.	7E0321	**REC17000K**	788
CATERPIL.	7E0321	**SHE17000K**	788
CATERPIL.	7E5076	**TEN02028**	788
CATERPIL.	116-7011	**TEN02021/1**	788
CATERPIL.	1L4774	**CEF500105T**	788
CATERPIL.	1L4774	**JOH09-1029B**	788
CATERPIL.	1L4774	**REC836-0001**	788
CATERPIL.	1W5664	**CEF500164T**	788
CATERPIL.	1W5664	**REC17000K**	788
CATERPIL.	1W5664	**SHE17000K**	788
CATERPIL.	3N1906	**CEF500106GT**	788
CATERPIL.	3N1906	**JOH09-1028B**	788
CATERPIL.	3N1906	**REC3841697**	788
CATERPIL.	3N4859	**CEF500152**	788
CATERPIL.	3N4859	**JAB17370-0001**	788
CATERPIL.	3N5895	**CEF500177GT**	788
CATERPIL.	3N5895	**JAB17018-0001**	788
CATERPIL.	3N5895	**REC3593573**	788
CATERPIL.	3N8449	**CEF500179GX**	788
CATERPIL.	3N8449	**SHE22000K**	788
CATERPIL.	4L8470	**CEF500145T**	788
CATERPIL.	4L8470	**JOH09-814B**	788
CATERPIL.	4L8470	**REC875697**	788
CATERPIL.	5N9360	**CEF500135**	788
CATERPIL.	5N9360	**JOH09-819B**	788
CATERPIL.	5N9360	**REC21730344**	788
CATERPIL.	6L2016	**TEN02022**	788
CATERPIL.	6L2279	**TEN02027TP**	788
CATERPIL.	6L2279G	**TEN02029TP**	788
CATERPIL.	6L2280	**TEN02027**	788
CATERPIL.	6L2282	**TEN02021TP**	788
CATERPIL.	6L2283	**TEN02021**	788
CATERPIL.	6L2284	**TEN02025**	788
CATERPIL.	6L2286	**TEN02026**	788
CATERPIL.	6L2288	**TEN02024**	788
CATERPIL.	6L3104	**TEN02029bis**	788
CATERPIL.	7C3286	**CEF500114T**	788
CATERPIL.	7C3286	**JAB17937-0001-P**	788
CATERPIL.	796351	**REC8HC2023K**	789
CATERPIL.	128000-5720	**REC128000-5720**	789
CATERPIL.	163-3361	**REC21323043**	789
CATERPIL.	6L2016	**CM6L2016**	789
CATERPIL.	6L2280	**CME1**	789
CATERPIL.	6L2283	**CM6L2283**	789
CATERPIL.	6L2284	**CME8D**	789
CATERPIL.	6L2285	**CME-8**	789
CATERPIL.	6L2288	**CM6L2288**	789
CHRIS-C.	16.50-00078	**REC27-34897**	790
CHRIS-C.	16.50-00250	**REC17030**	790
CHRIS-C.	16.50-00259	**REC17046**	790
CHRIS-C.	16.80-18346	**SHEG30-2B**	790
CHRIS-C.	1650-056022	**BACC47-1650-06022**	790
CHRIS-C.	1650-05944	**OSC0959**	790
CHRIS-C.	16.50-00074	**REC27-34213**	791
CHRIS-C.	16.50-005756	**REC27-34898**	791
CHRIS-C.	16.80-90047	**SHE10077K**	791
CHRIS-C.	16.80-90049	**SHE09959K**	791
CHRIS-C.	16.80-90131	**SHE10615K**	791
CHRIS-C.	16.80-90166	**SHE09959K**	791
CHRIS-C.	16.81-08746	**REC35-06003**	791
CHRIS-C.	1R-16.81-06536	**REC35-06007**	791
CHRIS-C.	45334	**REC392-9766**	792
CHRIS-C.	45334	**REC823426A1**	792
CHRIS-C.	16.69-00148	**REC982209**	792
CHRIS-C.	18-5399	**REC835702**	792
CHRIS-C.	41057	**REC33662**	793
CHRIS-C.	1869704	**REC64851**	793
CHRIS-C.	16.69-00039	**REC391-5090**	793
CHRIS-C.	16.69-00040	**REC8M6001217**	793
CHRIS-C.	16.69-00042	**REC841243**	793
CHRIS-C.	16.69-00049	**REC34235T**	793
CHRIS-C.	16.69-00050	**REC33662**	793
CHRIS-C.	16.69-00051	**REC58217**	793
CHRIS-C.	16.69-00052	**REC393-9459Q1**	793
CHRIS-C.	16.69-00100	**REC12532**	793
CHRIS-C.	16.69-00149	**REC89825302**	793
CHRIS-C.	FI6900165	**REC12532**	793
CHRIS-C.	16.50-00162	**REC27-344861**	794
CHRIS-C.	37068	**REC1463-9382**	795
CHRIS-C.	51080	**REC1463-9382**	795
CHRIS-C.	16.61-0042	**REC50-99417A2**	795
CHRIS-C.	16.61-0043	**REC50-99417A2**	795
CRUSADER	30266	**REC17040**	795
CRUSADER	31136	**REC17042**	795
CRUSADER	31137	**REC17048**	795
CRUSADER	33408	**REC17010**	795
CRUSADER	7057500	**REC17030**	795
CRUSADER	20129	**REC27-14250**	796
CRUSADER	33393	**REC17310**	796
CRUSADER	91351	**REC17930**	796
CRUSADER	96120	**HOT20925**	796
CRUSADER	96121	**HOT20926**	796
CRUSADER	97114	**HOT20929**	796
CRUSADER	97115	**HOT20933**	796
CRUSADER	97686	**REC17920**	796
CRUSADER	97752	**HOT20925**	796
CRUSADER	97753	**HOT20926**	796
CRUSADER	97992	**HOT20929**	796
CRUSADER	97993	**HOT20933**	796
CRUSADER	96306	**REC27-33395**	797
CRUSADER	97498	**REC27-99757**	797
CRUSADER	98125	**HOT20982**	797
CRUSADER	98126	**HOT20938**	797
CRUSADER	98128	**HOT30984**	797
CRUSADER	98243	**REC98243**	797
CRUSADER	96560	**HOT20934**	798
CRUSADER	96562	**HOT26562-MK**	798
CRUSADER	96562	**REC96562**	798
CRUSADER	97169	**HOT20916**	798
CRUSADER	97386	**HOT20918**	798
CRUSADER	97387	**OSC7387**	798
CRUSADER	97624	**OSC7624**	798
CRUSADER	97772	**HOT20927**	798
CRUSADER	97924	**HOT20928**	798
CRUSADER	98068	**HOT20934**	798
CRUSADER	17670	**REC46-8M0113735**	799
CRUSADER	20318	**REC46-8M0113734**	799
CRUSADER	30103	**REC46-8M0113735**	799
CRUSADER	40050	**RECP1014**	799
CRUSADER	40050	**SHEP1014**	799
CRUSADER	40070	**REC3860703**	799
CRUSADER	67859	**REC46-8M0113735**	799
CRUSADER	97179	**SHEE35**	799
CRUSADER	811573	**REC46-8M0113735**	799
CRUSADER	7142520	**REC46-8M0113734**	799
CRUSADER	RA057031	**RECP1014**	799
CRUSADER	RA057031	**SHEP1014**	799
CRUSADER	20292	**SHE4257**	800
CRUSADER	20300	**CEF500120T**	800
CRUSADER	20300	**REC10615K**	800
CRUSADER	20300	**SHE10615K**	800
CRUSADER	20309	**SHE10927**	800
CRUSADER	20310	**CEF500120T**	800
CRUSADER	20310	**REC10615K**	800
CRUSADER	20310	**SHE10615K**	800
CRUSADER	22212	**CEF500103T**	800
CRUSADER	22212	**REC3854286**	800
CRUSADER	40057	**SHE12859**	800
CRUSADER	727103	**REC10077K**	800
CRUSADER	981650	**REC3855276**	800
CRUSADER	982063	**REC62092T**	800
CRUSADER	1003026	**CEF500103T**	800
CRUSADER	1003026	**REC3854286**	800
CRUSADER	1003026	**SHE09959K**	800
CRUSADER	1003062	**CEF500103T**	800
CRUSADER	R061017	**CEF500120T**	800
CRUSADER	R061017	**SHE10615K**	800
CRUSADER	91606	**REC982230**	801
CRUSADER	96358	**REC76270T**	801
CRUSADER	97361	**REC97361**	801
CRUSADER	97895	**REC8M0091470**	801
CRUSADER	98041	**REC35-8M0061975**	801
CRUSADER	201104	**REC35-06003**	801
CRUSADER	201104	**REC3850559**	801
CRUSADER	9002514	**REC35-06007**	801
CRUSADER	45334	**REC823426A1**	802
CRUSADER	33628	**REC805298A1**	803
CRUSADER	47002	**REC3850397**	803
CRUSADER	47032	**REC8M0125617**	803
CRUSADER	47033	**REC3855194**	803
CRUSADER	97214	**REC85785A2**	803
CRUSADER	97595	**REC85785A2**	803
CRUSADER	700425	**REC8M0068784**	803
CRUSADER	700427	**REC97258A1**	803
CRUSADER	12528	**REC33708**	804
CRUSADER	20222	**REC982209**	804
CRUSADER	38070	**REC3854548**	804
CRUSADER	41069	**REC392-9086T**	804
CRUSADER	41076	**REC392-9766**	804
CRUSADER	3000121	**REC393-4988**	804
CRUSADER	16.69-00100	**REC12532**	804
CRUSADER	FI6900165	**REC12532**	804
CRUSADER	12526	**REC33706**	805
CRUSADER	12530	**REC8M6001217**	805
CRUSADER	12531	**REC841243**	805
CRUSADER	20117	**REC391-5090**	805
CRUSADER	20223	**REC3854311**	805
CRUSADER	20223	**REC89825302**	805
CRUSADER	38071	**REC3854549**	805
CRUSADER	41057	**REC33662**	805
CRUSADER	41058	**REC8M6001219**	805
CRUSADER	41059	**REC834975**	805
CRUSADER	41074	**REC3853801**	805
CRUSADER	41089	**REC3853801**	805
CRUSADER	705787	**REC33662**	805
CRUSADER	1003318	**REC841243**	805
CRUSADER	3000122	**REC65864**	805
CRUSADER	3000124	**REC58033**	805
CRUSADER	3854261	**REC3854261**	805
CRUSADER	37061	**REC17177A1**	806
CRUSADER	RA107039E	**REC805222A1**	806
CRUSADER	37068	**REC1463-9382**	807
CRUSADER	51080	**REC1463-9382**	807
CRUSADER	3854161	**REC3854161**	807
CRUSADER	7243110	**REC3854003**	807
CRUSADER	7243200	**REC3854002**	807
CRUSADER		**REC26901**	807
CRUSADER		**REC26904**	807
CRUSADER		**REC26905**	807
CRUSADER		**REC26905**	807
CRUSADER		**REC300-00879**	807
CRUSADER		**REC3854001**	807
CRUSADER	42090	**REC50-97499A2**	808
CRUSADER	42091	**REC50-808011A05**	808
CRUSADER	1109482	**REC50-99418A2**	808
CRUSADER	1109484	**REC50-97499A2**	808
CRUSADER	1109485	**REC50-808011A05**	808
CRUSADER	9000888	**REC50-808011A05**	808
CRUSADER	19010615	**REC50-808011A05**	808
CRUSADER	19010617	**REC50-97499A2**	808
CRUSADER	RA122008	**REC50-97499A2**	808
CRUSADER	RA122009	**REC50-808011A05**	808
CRUSADER	RA122015	**REC50-863007A1**	808

	OEM	REF	
CUMMINS	3010336	**DJC004**	809
CUMMINS	3010336	**DJC0820**	809
CUMMINS	3010336	**SHEM71**	809
CUMMINS	3278137	**DJC004**	809
CUMMINS	3278137	**DJC0820**	809
CUMMINS	3278137	**SHEM71**	809
CUMMINS	3349392	**SHEG2903X**	809
CUMMINS	3897194	**DJC1730**	806
CUMMINS	3907458	**DJC0820**	809
CUMMINS	3907458	**SHEM71**	809
CUMMINS	3912019	**DJC0820**	809
CUMMINS	3912019	**SHEM71**	809
CUMMINS	3912139	**DJC0819**	809
CUMMINS	3912139	**RECP1722C**	809
CUMMINS	3912139	**SHEP1722C**	809
CUMMINS	3922122	**REC3922122**	809
CUMMINS	3922589	**DJC0819**	809
CUMMINS	3922589	**RECP1722C**	809
CUMMINS	3922589	**SHEG2603X**	809
CUMMINS	3922589	**SHEP1722C**	809
CUMMINS	3964989	**RECP1722C**	809
CUMMINS	3967246	**SHEG2603X**	809
CUMMINS	4019951	**REC3922122**	809
CUMMINS	4020066	**REC3922122**	809
CUMMINS	4929178	**SHEG2903X**	809
CUMMINS	5260393	**SHEG2903X**	809
CUMMINS	3866493	**DJC1730**	810
CUMMINS	3866493	**SHEP1730C**	810
CUMMINS	3897194	**SHEP1727C**	810
CUMMINS	3897194	**SHEP1730C**	810
CUMMINS	3919899	**RECP1716C**	810
CUMMINS	3919899	**SHEP1716C**	810
CUMMINS	3922590	**RECP1716C**	810
CUMMINS	3922590	**SHEP1716C**	810
CUMMINS	854179001	**SHEP1016**	810
CUMMINS	879312023	**SHEP1016**	810
CUMMINS	3349198	**CEF500167**	811
CUMMINS	3349198	**REC15000K**	811
CUMMINS	3349198	**SHE15000K**	811
CUMMINS	3802444	**CEF500164T**	811
CUMMINS	3802444	**REC17000K**	811
CUMMINS	3802444	**SHE17000K**	811
CUMMINS	3897337	**CEF500164T**	811
CUMMINS	3897337	**REC17000K**	811
CUMMINS	3897337	**SHE17000K**	811
CUMMINS	3908220	**CEF500120T**	811
CUMMINS	3908220	**REC10615K**	811
CUMMINS	3908220	**SHE10615K**	811
CUMMINS	3916720	**CEF500167**	811
CUMMINS	3916720	**REC15000K**	811
CUMMINS	3916720	**SHE15000K**	811
CUMMINS	3916852	**CEF500164T**	811
CUMMINS	3916852	**REC17000K**	811
CUMMINS	3916852	**SHE17000K**	811
CUMMINS	3925236	**CEF500164T**	811
CUMMINS	3925236	**REC17000K**	811
CUMMINS	3925236	**SHE17000K**	811
CUMMINS	3972366	**CEF500183G**	811
CUMMINS	3974456	**CEF500181G**	811
CUMMINS	3974456	**REC27000K**	811
CUMMINS	4019403	**CEF500182G**	811
CUMMINS	4019403	**REC18000K**	811
CUMMINS	4019403	**SHE18000K**	811
CUMMINS	4933743	**CEF500182G**	811
CUMMINS	4933743	**REC18000K**	811
CUMMINS	4933743	**SHE18000K**	811
CUMMINS	68241	**TEN02044**	812
CUMMINS	882571	**REC882571**	812
CUMMINS	3904445	**REC3916854**	812
CUMMINS	3916854	**REC3916854**	812
CUMMINS	3604654RX	**REC3604654RX**	812
CUMMINS	8M0084523	**REC882571**	812
DETROIT D.	18780	**REC8927296**	813
DETROIT D.	5145576	**REC5145578**	813
DETROIT D.	5145577	**REC5145578**	813
DETROIT D.	5145578	**REC5145578**	813
DETROIT D.	5197221	**REC5197221**	813
DETROIT D.	8923363	**REC8923363**	813
DETROIT D.	8927296	**REC8927296**	813
DETROIT D.	23502086	**REC18786-0001**	813
DETROIT D.	23507475	**REC8923363**	813
DETROIT D.	23507476	**REC8923363**	813
DETROIT D.	23507477	**REC8923363**	813
DETROIT D.	23507973	**REC8923363**	813
DETROIT D.	23525200	**REC23535447**	813
DETROIT D.	23535477	**REC23535447**	813

	OEM	REF	
DETROIT D.	5193553	**CEF500105T**	814
DETROIT D.	5193553	**JOH09-1029B**	814
DETROIT D.	5193553	**REC836-0001**	814
DETROIT D.	5193602	**CEF500106GT**	814
DETROIT D.	5193602	**JOH09-1028B**	814
DETROIT D.	5193602	**REC3841697**	814
DETROIT D.	5196168	**CEF500145T**	814
DETROIT D.	5196168	**JOH09-814B**	814
DETROIT D.	5196168	**REC875697**	814
DETROIT D.	5196629	**CEF500106GT**	814
DETROIT D.	5196629	**JOH09-1028B**	814
DETROIT D.	5196629	**REC3841697**	814
DETROIT D.	5199148	**CEF500106GT**	814
DETROIT D.	5199148	**JOH09-1028B**	814
DETROIT D.	5199148	**REC3841697**	814
DETROIT D.	8924838	**CEF500135**	814
DETROIT D.	8924838	**JOH09-819B**	814
DETROIT D.	8927570	**CEF500152**	814
DETROIT D.	8927570	**JAB17370-0001**	814
DETROIT D.	8927570	**REC17370-0001**	814
DETROIT D.	23502086	**CEF500153**	814
DETROIT D.	23502086	**JAB18786-0001**	814
FISHER P.	20291	**REC10-24571-01**	814
FISHER P.	060-068-0-0-B	**REC10-35127-3**	814
FISHER P.	10-24571-01	**REC10-24571-01**	814
FISHER P.	10-35127-3	**REC10-35127-3**	814
FISHER P.	FP1-000410	**REC10-35127-3**	814
FISHER P.	IC36.03.01.007H	**REC10-35127-3**	814
HURT	879194241	**REC016940**	815
HURT	8791014241	**REC016940**	815
HURT	35-813405	**REC016940**	815
HURT	35-813405A1	**REC016940**	815
HURT	35-815419	**REC016940**	815
HURT	F19608751	**REC016940**	815
HURT	FFF001138	**REC016940**	815
INDMAR	0994-000	**HOT20997**	815
INDMAR	53-2009	**HOT20907**	815
INDMAR	53-2018	**HOT20907**	815
INDMAR	53-2800	**HOT20998**	815
INDMAR	685011	**REC3860703**	816
INDMAR	751007	**REC8M6001219**	816
INDMAR	53-2027-T	**HGE2027**	816
INDMAR	573001	**REC50-97499A2**	817
INDMAR	575010	**REC575010**	817
INDMAR	575011	**REC575011**	817
INDMAR	755017	**REC33662**	817
KOHLER	229678	**REC229678**	818
KOHLER	229826	**REC09000K**	819
KOHLER	344085	**REC344085**	819
KOHLER	344085	**SHEG907P**	819
KOHLER	344371	**REC344085**	819
KOHLER	344371	**SHEG907P**	819
KOHLER	359978	**REC08000K**	819
KOHLER	132-0275	**SHEG8001**	819
KOHLER	GM46936	**RECGM46936**	819
KOHLER	GM46936	**SHEG910P**	819
KOHLER	GM58527	**REC29350-1001**	819
KOHLER	229826	**CEF500165**	820
KOHLER	229826	**SHE09000K**	820
KOHLER	229955	**CEF500129**	820
KOHLER	229955	**REC22779-0001**	820
KOHLER	250872	**CEF500129**	820
KOHLER	250872	**REC22779-0001**	820
KOHLER	252882	**REC21213660**	820
KOHLER	260085	**CME0**	820
KOHLER	267928	**CME0**	820
KOHLER	359978	**CEF500190G**	820
KOHLER	359978	**SHE08000K**	820
MAN	50.06506.0089	**CEF500145T**	821
MAN	50.06506.0089	**JOH09-814B**	821
MAN	50.06506.0089	**REC875697**	821
MAN	50.06506.0091	**CEF500106GT**	821
MAN	50.06506.0091	**JOH09-1028B**	821
MAN	50.06506.0091	**REC3841697**	821
MAN	51.06505.0103	**CEF500162G**	821
MAN	51.06505.0103	**JOH09-821B**	821
MAN	51.06505.0106	**CEF500186T**	821
MAN	51.06505.0106	**JOH09-820B**	821
MAN	51.06505.0127	**JOH09-842B**	821
MAN	65.00600.0016	**REC22040-0701S**	821
MASE	20291	**REC10-24571-01**	822
MASE	20639	**REC10-24570-01**	822
MASE	10-24570-01	**REC10-24570-01**	822
MASE	10-24571-01	**REC10-24571-01**	822
NANNI D.	434013	**CEF500121GX**	823
NANNI D.	434013	**JOH09-808B**	823

	OEM	REF	
NANNI D.	434013	**REC3586496**	823
NANNI D.	434014	**CEF500101X**	823
NANNI D.	434014	**JOH09-810B**	823
NANNI D.	434014	**REC653-0001**	823
NANNI D.	48200932	**REC873770**	823
NANNI D.	50.06506.0089	**CEF500135**	823
NANNI D.	50.06506.0089	**JOH09-814B**	823
NANNI D.	50.06506.0089	**REC21730344**	823
NANNI D.	50.06506.0091	**CEF500106GT**	823
NANNI D.	50.06506.0091	**JOH09-1028B**	823
NANNI D.	50.06506.0091	**REC3841697**	823
NANNI D.	51.06506.0103	**JOH09-821B**	823
NANNI D.	51.06506.0106	**JOH09-820B**	823
NANNI D.		**CEF500114T**	823
NANNI D.		**CEF500146X**	823
NANNI D.		**JAB17937-0001-P**	823
NANNI D.		**JOH09-1027B**	823
NANNI D.		**REC17937-0001**	823
NANNI D.		**REC21213660**	823
NANNI D.		**RM841812**	823
ONAN	1220602	**REC1220602**	824
ONAN	1491754	**REC1491754**	824
ONAN	1491758	**REC1491758**	824
ONAN	1492250	**REC1492250I**	824
ONAN	1855835	**REC1855835**	824
ONAN	149-2106	**REC149-2106**	824
ONAN	1492251 II	**REC1492251II**	824
ONAN	185-5835	**REC1855835**	824
ONAN	1220810	**REC1220810**	825
ONAN	1320278	**SHEL10B**	825
ONAN	122-0550	**REC1220550**	825
ONAN	122-0810	**REC1220810**	825
ONAN	122.0716.712	**REC1220716712**	825
ONAN	132-0275	**SHEK75B**	825
ONAN	132-0278	**SHEL10B**	825
ONAN	132-0358	**SHEG702**	825
ONAN	132-0459	**SHEG702**	825
ONAN	135-0278	**SHEK75B**	825
ONAN	185-2133	**REC185-2133**	825
ONAN	187.0014	**REC1870014**	825
ONAN	132-0343	**RECG1010**	826
ONAN	132-0343	**SHEG1010**	826
ONAN	132-0347	**RECG1010**	826
ONAN	132-0347	**SHEG1010**	826
ONAN	132-0356	**RECG1010**	826
ONAN	132-0356	**SHEG1010**	826
ONAN	132-0358	**RECG702**	826
ONAN	132-0379	**RECG702**	826
ONAN	132-0395	**RECG8002**	826
ONAN	132-0395	**SHEG8002**	826
ONAN	132-0413	**RECG1010**	826
ONAN	132-0413	**SHEG1010**	826
ONAN	132-0415	**RECG8002**	826
ONAN	132-0430	**RECG8002**	826
ONAN	132-0430	**SHEG8002**	826
ONAN	132-0459	**RECG702**	826
ONAN	132-0464	**SHEG1012**	826
ONAN	A029U129	**RECG1010**	826
ONAN	A032Y747	**RECG1012**	826
ONAN	G1010	**RECG1010**	826
ONAN	G1010-1	**RECG1010**	826
ONAN	G1012	**RECG1012**	826
ONAN	G701	**RECG702**	826
ONAN	G702	**RECG702**	826
ONAN	G8002	**RECG8002**	826
ONAN	08-21-1201	**CEF500107T**	827
ONAN	08-21-1201	**JAB12104-0001**	827
ONAN	08-21-1201	**JOH09-1027B**	827
ONAN	08-21-1201	**REC21213660**	827
ONAN	130-4434	**TEN01318T**	827
ONAN	131-0050	**CEF500107T**	827
ONAN	131-0050	**JAB12104-0001**	827
ONAN	131-0050	**JOH09-1027B**	827
ONAN	131-0050	**REC21213660**	827
ONAN	132-0117	**CEF500103T**	827
ONAN	132-0117	**REC3854286**	827
ONAN	132-0117	**SHE09959K**	827
ONAN	132-0162	**CEF500107T**	827
ONAN	132-0162	**JAB12104-0001**	827
ONAN	132-0162	**JOH09-1027B**	827
ONAN	132-0162	**REC21213660**	827
ONAN	132-0292	**CEF500120T**	827
ONAN	132-0292	**REC10615K**	827
ONAN	132-0292	**SHE10615K**	827
ONAN	132-0317	**CEF500103T**	827
ONAN	132-0317	**REC3854286**	827

	OEM	REF	
ONAN	132-0317	**SHE09959K**	827
ONAN	132-0348	**CEF500120T**	827
ONAN	132-0348	**REC10615K**	827
ONAN	132-0348	**SHE10615K**	827
ONAN	132-0349	**CEF500120T**	827
ONAN	132-0349	**REC10615K**	827
ONAN	132-0349	**SHE10615K**	827
ONAN	132-0375	**CEF500166**	827
ONAN	132-0375	**REC10077K**	827
ONAN	132-0375	**SHE10077K**	827
ONAN	132-0407	**CEF500190G**	827
ONAN	132-0407	**REC08000K**	827
ONAN	132-0407	**SHE08000K**	827
ONAN	132-0415	**CEF500190G**	827
ONAN	132-0415	**REC08000K**	827
ONAN	132-0415	**SHE08000K**	827
ONAN	132-0464	**RECG1012**	827
ONAN	132-0498	**CEF500166**	827
ONAN	132-0498	**REC10077K**	827
ONAN	132-0498	**SHE10077K**	827
ONAN	132-0859	**JOH09-806B**	827
ONAN	132B59	**JOH09-806B**	827
ONAN	G1009	**RECG1012**	827
ONAN	882481	**REC879194371**	828
ONAN	889903	**REC879194371**	828
ONAN	879194371	**REC879194371**	828
ONAN	185-2166	**REC879194371**	828
ONAN	A026K278	**REC149-2106**	828
PERKINS	135616660	**RM861906**	828
PERKINS	89058	**BAPE-1-6354**	829
PERKINS	2654347	**REC35-816168**	829
PERKINS	2654407	**REC35-816168**	829
PERKINS	135616660	**MAR906**	829
PERKINS	135616660	**RM861906**	829
PERKINS	3776F024	**MAR345**	829
PERKINS	2656017	**REC3581078**	830
PERKINS	M20	**REC29350-1001**	830
PERKINS	460024	**CEF500114T**	831
PERKINS	460024	**JAB17937-0001-P**	831
PERKINS	460024	**REC17937-0001**	831
PERKINS	460027	**CEF500105T**	831
PERKINS	460027	**CEF500145T**	831
PERKINS	460027	**JOH09-1029B**	831
PERKINS	460027	**REC836-0001**	831
PERKINS	460027	**REC875697**	831
PERKINS	460038	**CEF500107T**	831
PERKINS	460038	**JOH09-1027B**	831
PERKINS	460038	**REC21213660**	831
PERKINS	24880031	**CEF500114T**	831
PERKINS	24880031	**JAB17937-0001-P**	831
PERKINS	24880031	**REC17937-0001**	831
PERKINS	24880178	**CEF500103T**	831
PERKINS	24880178	**REC3854286**	831
PERKINS	24880178	**SHE09959K**	831
PERKINS	24880190	**CEF500107T**	831
PERKINS	24880190	**JOH09-1027B**	831
PERKINS	24880190	**REC21213660**	831
PERKINS	24880194	**CEF500116GX**	831
PERKINS	24880194	**JOH09-1026B**	831
PERKINS	24880194	**REC3593659**	831
PERKINS	24880272	**CEF500100GX**	831
PERKINS	24880272	**JOH09-806B**	831
PERKINS	24880272	**REC3586494**	831
PERKINS	NA900010	**CEF500103T**	831
PERKINS	NA900010	**REC3854286**	831
PERKINS	NA900010	**SHE09959K**	831
PERKINS	NA900012	**CEF500120T**	831
PERKINS	NA900012	**REC10615K**	831
PERKINS	185086600	**REC21323043**	832
PERKINS	185086610	**REC21302969**	832
PERKINS	185086620	**REC21302969**	832
PLEASUREC.	RM0032	**FEL17060**	832
PLEASUREC.	6269577	**REC17030**	832
PLEASUREC.	CHV-47-000	**REC27-33395**	833
PLEASUREC.	R028001	**HOT20996**	833
PLEASUREC.	R029001	**HOT20011**	833
PLEASUREC.	RA057004	**REC3853796**	833
PLEASUREC.	RA057019	**REC46-8M0113735**	833
PLEASUREC.	RM0007	**REC3852455**	833
PLEASUREC.	40050	**RECP1014**	834
PLEASUREC.	40050	**SHEP1014**	834
PLEASUREC.	R026002E	**REC8M0089715**	834
PLEASUREC.	RA057018	**REC46-8M0113734**	834
PLEASUREC.	RA057023	**REC3860703**	834
PLEASUREC.	RA057026	**REC3860703**	834
PLEASUREC.	RA57007	**SHEG21**	834

	OEM	REF	
PLEASUREC.	RP026002E	**REC97361**	834
PLEASUREC.	RP061015	**SHE09959K**	834
PLEASUREC.	RP061017	**SHE10615K**	834
PLEASUREC.	40050	**REC62092T**	835
PLEASUREC.	3705042	**REC27-34213**	835
PLEASUREC.	R077001	**REC35-06007**	835
PLEASUREC.	R077002	**REC35-06003**	835
PLEASUREC.	RN0116	**REC1396-4656**	835
PLEASUREC.	RN0116-2	**REC1396-4656**	835
PLEASUREC.	RN0118	**REC1396-5238**	835
PLEASUREC.	RN0120	**REC1396-5238**	835
PLEASUREC.	R020027	**REC806612T**	836
PLEASUREC.	R020035A	**REC892615002**	836
PLEASUREC.	R084003	**REC3843751**	836
PLEASUREC.	RA108002	**REC835702**	836
PLEASUREC.	RA108003	**REC392-9766**	836
PLEASUREC.	RN0116	**REC1396-4148**	836
PLEASUREC.	RN0116-2	**REC1396-4148**	836
PLEASUREC.	RO200001	**REC8M0068784**	836
PLEASUREC.	R08001	**REC982209**	837
PLEASUREC.	R103001	**REC89825302**	837
PLEASUREC.	R103003	**REC834975**	837
PLEASUREC.	R103004	**REC3853801**	837
PLEASUREC.	R103011	**REC898253013**	837
PLEASUREC.	R114001	**REC391-5090**	837
PLEASUREC.	R114002	**REC8M6001219**	837
PLEASUREC.	R114004	**REC391-5090**	837
PLEASUREC.	R115001	**REC8M6001217**	837
PLEASUREC.	R115002	**REC33662**	837
PLEASUREC.	RA108009	**REC898253T22**	837
PLEASUREC.	RA107001	**REC392-6316**	838
PLEASUREC.	RA107039E	**REC805222A1**	838
PLEASUREC.	R117001	**REC1463-9382**	839
PLEASUREC.	R117012	**REC3861267**	839
PLEASUREC.	987811	**REC3854190**	840
PLEASUREC.	9000888	**REC50-97499A2**	840
PLEASUREC.	RA097002	**REC69729**	840
PLEASUREC.	RA097003	**REC69729**	840
PLEASUREC.	RA097006	**REC69729**	840
PLEASUREC.	RA122001	**REC3854190**	840
PLEASUREC.	RA122008	**REC50-97499A2**	840
PLEASUREC.	RA122009	**REC50-808011A05**	840
PLEASUREC.	RK122014	**REC3854190**	840
PLEASUREC.	R017066	**REC90301-ZW1-003**	841
PLEASUREC.	R085035	**REC32-86036**	841
PLEASUREC.	R094020A	**REC23-99291**	841
PLEASUREC.	R096081	**REC897367**	841
PLEASUREC.	R096116	**REC12-835467Q01**	841
PLEASUREC.	R096117	**REC90508-ZW1-003**	841
PLEASUREC.	R130001	**REC3853839**	841
PLEASUREC.	RA097007	**REC575010**	841
PLEASUREC.	RA097007	**REC575011**	841
RENAULT C.	48300006	**CEF500128**	842
RENAULT C.	48300008	**CEF500122T**	842
RENAULT C.	48300037	**CEF500127**	842
RENAULT C.	RC320D	**CEF500106GT**	842
RENAULT C.	RC320D	**JOH09-1028B**	842
RENAULT C.	RC320D	**REC3841697**	842
SOLE D.	40030092	**TEN00400SOLE/1**	843
SOLE D.	40045092	**TEN00400SOLE/3**	843
SOLE D.	40050092	**TEN00400SOLE/4**	843
SOLE D.	50035092	**TEN00400SOLE/2**	843
SOLE D.	312.11.008	**CEF500123X**	843
SOLE D.	321.11.008	**CEF500131X**	843
SOLE D.	347.11.008	**CEF500106GT**	843
SOLE D.	347.11.008	**JOH09-1028B**	843
SOLE D.	347.11.008	**REC3841697**	843
SOLE D.	351.11.008	**CEF500107T**	843
SOLE D.	351.11.008	**JOH09-1027B**	843
SOLE D.	351.11.008	**REC21213660**	843
VETUS	BP1185	**TEN03507**	844
VETUS	BP1210	**TEN03508**	844
VETUS	BP129	**TEN03502**	844
VETUS	BP195	**TEN03509**	844
VETUS	BP195E	**TEN03500**	844
VETUS	IMP00101	**CEF500129**	844
VETUS	IMP00101	**REC22779-0001**	844
VETUS	IMP00201	**JOH09-1027B**	844
VETUS	IMP00201	**REC21213660**	844
VETUS	IMP00301	**CEF500106GT**	844
VETUS	IMP00301	**JOH09-1028B**	844
VETUS	IMP00301	**REC3841697**	844
VETUS	IMP00701	**CEF500146X**	844
VETUS	SET0152	**TEN03508**	844
VETUS	SET150	**TEN03507**	844
VETUS	SET151	**TEN03500**	844

	OEM	REF	
VETUS	SET153	**TEN03502**	844
VETUS	STM8061	**CEF500101X**	844
VETUS	STM8061	**JOH09-810B**	844
VETUS	STM8061	**REC653-0001**	844
VETUS	ZINK15SC	**TEN03510**	844
VETUS	ZINK25SC	**TEN03511**	844
VETUS	BP1126	**TEN03506**	845
VETUS	BP1221	**TEN03505**	845
VETUS	SET0148	**TEN03505**	845
VETUS	SET0149	**TEN03506**	845
VETUS	ZINK15C	**TEN00220**	845
VETUS	ZINK25C	**TEN00221**	845
VETUS	ZINK35C	**TEN00223**	845
WESTERB.	33486	**REC50-97499A2**	845
WESTERB.	36918	**REC36918**	845
WESTERB.	11353	**SHER10870G**	846
WESTERB.	11418	**CEF500103T**	846
WESTERB.	11418	**REC3854286**	846
WESTERB.	11418	**SHE09959K**	846
WESTERB.	11764	**CEF500166**	846
WESTERB.	11764	**REC10077K**	846
WESTERB.	11764	**SHE10077K**	846
WESTERB.	11907	**CEF500103T**	846
WESTERB.	11907	**REC3854286**	846
WESTERB.	11907	**SHE09959K**	846
WESTERB.	13930	**CEF500120T**	846
WESTERB.	13930	**REC10615K**	846
WESTERB.	13930	**SHE10615K**	846
WESTERB.	30594	**ARC86050**	846
WESTERB.	33100	**CEF500166**	846
WESTERB.	33100	**REC10077K**	846
WESTERB.	33100	**SHE10077K**	846
WESTERB.	33104	**CEF500103T**	846
WESTERB.	33104	**REC3854286**	846
WESTERB.	33104	**SHE09959K**	846
WESTERB.	33636	**REC48080**	846
WESTERB.	37431	**CEF500101X**	846
WESTERB.	37431	**JOH09-810B**	846
WESTERB.	37431	**REC48080**	846
WESTERB.	37431	**REC653-0001**	846
WESTERB.	42026	**REC10-24569-01**	846
WESTERB.	48080	**CEF500101X**	846
WESTERB.	48080	**JOH09-810B**	846
WESTERB.	48080	**REC48080**	846
WESTERB.	48080	**REC653-0001**	846
WESTERB.	55624	**REC10-24569-01**	846
WESTERB.	302648	**RECG908**	846
WESTERB.	302837	**RECG908**	846
WESTERB.	302875	**CEF500165**	846
WESTERB.	302875	**REC09000K**	846
WESTERB.	302875	**SHE09000K**	846
WESTERB.	10-24569-01	**REC10-24569-01**	846
WESTERB.	G903	**RECG908**	846
WESTERB.	G908	**RECG908**	846
WESTERB.	11885	**CME0**	847

POLÍTICA DE GARANTIA Y DEVOLUCIÓN
WARRANTY AND RETURN POLICY
POLITICA DI GARANZIE E REGOLE PER I RESI MERCE
POLITIQUE DE GARANTIE ET RETOUR DE PIÈCES

POLÍTICA DE GARANTÍAS RECMAR

Todos los productos comercializados por **Recambios Marinos S.L.U.** deben ser instalados y utilizados por personal competente bajo su exclusiva responsabilidad. **Recambios Marinos S.L.U.** no se responsabiliza de las consecuencias producidas por una instalación defectuosa o inapropiada de ningún artículo que no incluya soluciones de instalación.

El instalador será el responsable de verificar la correcta aplicación de las recomendaciones del fabricante en cuanto a compatibilidades de uso.

Los artículos comercializados por **Recambios Marinos S.L.U.** están amparados por la garantía legal de conformidad, conforme a las condiciones expuestas en el real decreto legislativo 1/2007 de 16 de Noviembre, aprobación del texto refundido de la ley general para la defensa de los consumidores y usuarios.

Recambios Marinos S.L.U. distribuye los artículos presentes en sus catálogos unicamente a profesionales, nunca a particulares o cliente final, el importe de la instalación jamás estará incluido en el precio por lo que no será responsable de ésta.

Los artículos comercializados por **Recambios Marinos S.L.U.** disponen de una garantía limitada por defectos de fabricación, los periodos pueden variar entre los 2 años y los 3 meses dependiendo del producto, aplicación y tipo de embarcaciónn (lista 7ª/ 6ª/ 5ª), descartando los artículos considerados como consumibles: bombillas, productos eléctricos, baterías y otros que carecen de periodo alguno, si necesita conocer el plazo exacto del producto contacte con el departamento comercial.

Por daños ocasionados en el transporte, se aplicará lo indicado en el artículo 366 de Código de Comercio, que dice : “Dentro de las veinticuatro horas siguientes al recibo de las mercancías, podrá hacerse reclamación contra la empresa de transporte asignada. Transcurridos los términos expresados o pagados los portes, no se admitirá reclamación alguna contra el transportista sobre el estado en que se entregó la mercancía.” El material que enviamos diariamente desde **Recambios Marinos S.L.U.** a nuestros clientes es examinado antes de empaquetarse para su perfecta integridad y evitar daños en el transporte. Recuerde que es muy importante inspeccionar las cargas en presencia del transportista. Cuando se observen daños en la caja, deberá incluirse en el albarán de entrega del transportista una mención del tipo (CONFORME MERCANCÍA, SALVO INSPECCIÓN), y deberá ser firmada por usted y el transportista. En caso de recibir material defectuoso por estas causas debe hacerlo constar tanto al transportista como a **Recambios Marinos S.L.U.** para poder reclamar a la empresa de transporte correspondiente.

SOLICITUD DE GARANTÍA

La garantía siempre estará sujeta a la valoración final del departamento técnico de **Recambios Marinos S.L.U.** Esta valoración se llevará a cabo en nuestras instalaciones o en caso necesario por el fabricante del artículo, en ambas opciones el artículo tiene que estar físicamente en nuestras instalaciones centrales de Viladecans. El tiempo para la resolución sera un máximo de 30 días naturales desde su recepción.

Para enviar el artículo defectuoso, debe ir a la pagina web www.recambiosmarinos.es, ir a su cuenta y seleccionar TRAMITAR GARANTÍA dentro del área privada, desde aquí podrá descargar el archivo para la solicitud de garantías de motores y piezas, y seguir las instrucciones.

Recambios Marinos S.L.U. no asumirá ningún préstamo de reemplazo durante el proceso de garantía.

EXCLUSIONES DE GARANTÍA

Recambios Marinos S.L.U. no podrá ser acusado como responsable del defecto ante:

- Desgaste normal del producto.
- Defectos de instalación o uso inadecuado.
- Instalación de un artículo no destinado a ese modelo.
- Daños por causa externa (accidente, rayo, fluctuación de corriente…)
- Defectos y consecuencias relacionadas con el transporte.
- Alteraciones en instalaciones o barcos destinados a la competición.

En caso de rechazo de la garantía, el cliente tiene la posibilidad de recuperar su artículo defectuoso poniéndose en contacto con nosotros vía e-mail solicitando la devolución del mismo dentro de los 7 días naturales siguientes a la fecha en que se le informó del rechazo de garantía.

Recambios Marinos S.L.U. no forma parte de las garantías comerciales anunciadas en ocasiones por los fabricantes.

NORMAS PARA LA DEVOLUCIÓN DE PIEZAS EN STOCK

Con el fin de ayudar a nuestros clientes a mantener un stock correcto, **Recambios Marinos S.L.U.** aceptará la devolución de aquellas piezas que se hayan pedido por error.

No se aceptarán devoluciones de material cuyo importe sea inferior a 30€.

REQUISITOS FORMALES:

El material a retornar, tiene que estar reflejado en un albarán. Ni el material ni el embalaje deben presentar desperfectos. Bajo ningún concepto se aceptarán devoluciones que no cumplan con alguno de estos puntos. La devolución se tramitará dentro del área privada desde la web www.recambiosmarinos.es

PLAZOS:

El plazo máximo para solicitar la devolución, será de 15 días naturales contados a partir de la fecha de expedición de la mercancía desde nuestras instalaciones. El plazo para la devolución de la mercancía será, como máximo, de 15 días naturales contados a partir de la fecha de recepción del número de pre-autorización de devolución (será notificado automaticamente por **Recambios Marinos S.L.U.** durante el proceso de devolución).

CONDICIONES:

Recambios Marinos S.L.U. , no aceptará bajo ningún concepto la devolución de estos artículos:

- Calzado.
- Material eléctrico.
- Material solicitado por encargo.
- Ánodos, anclas, cadena, mangueras.
- Artículos obsoletos o descatalogados.
- Hélices, neumáticas, Paddle Surf y motores Parsun.
- Aceites, pinturas,grasas , líquidos, incluyendo cualquier producto de limpieza y mantenimiento en general.

DAÑOS OCASIONADOS POR EL TRANSPORTE:

Se aplicará lo indicado en el artículo 366 de Código de Comercio, que dice: ”Dentro de las veinticuatro horas siguientes al recibo de las mercancías, podrá hacerse reclamación contra la empresa de transporte asignada. Transcurridos los términos expresados o pagados los portes, no se admitirá reclamación alguna contra el transportista sobre el estado en que se entregó la mercancía.

El material que enviamos diariamente desde **Recambios Marinos S.L.U.** a nuestros clientes es examinado antes de empaquetarse para su perfecta integridad y evitar daños en el transporte. Recuerde que es muy importante inspeccionar las cargas en presencia del transportista. Cuando se observen daños en la caja, deberá incluirse en el albarán de entrega del transportista una mención del tipo (CONFORME MERCANCÍA, SALVO INSPECCIÓN), y deberá ser firmada por usted y el transportista, en caso de recibir material defectuoso por estas causas debe hacerlo constar tanto al transportista como a **Recambios Marinos S.L.U.** para poder reclamar a la empresa de transporte correspondiente.

Todas las devoluciones de material que previamente hayan sido autorizadas se remitirán a **Recambios Marinos S.L.U.** indicando en el lugar visible el número de devolución.

ABONOS:

Recambios Marinos S.L.U. procederá a abonar todas las devoluciones (que cumplan todos y cada uno de los requisitos formales, plazos y condiciones) por un importe del 90% del facturado originalmente. El 10% restante irá destinado a soportar los costes originados por las devoluciones (manipulación, embalaje, control de calidad...).

RESERVA DE PROPIEDAD:

Recambios Marinos S.L.U. se reserva el derecho de propiedad de todos los materiales que suministre hasta que el comprador haya satisfecho el pago total de los mismos.

GARANTÍA LIMITADA DE RECAMBIOS MARINOS, S.L.U.

Los productos suministrados por **Recambios Marinos S.L.U.** están garantizados por defectos en el material o fabricación por un periodo de:

2 años desde la fecha de compra para productos NUEVOS

1 año para los RECONSTRUIDOS.

Los productos utilizados con fines comerciales, de alquiler o uso profesional, están garantizados por un periodo de 90 días.

En cualquier caso será imprescindible la presentación de la factura de compra.

Recambios Marinos S.L.U. no cubre en garantía y queda al margen de cualquier error de instalación que pudiera ocasionar el concesionario, servicio técnico, mecánio o cliente final. Esta garantía se refiere únicamente a defectos de fabricación y excluye los siguientes casos:

- modificación, desmontaje de las piezas
- ajustes
- desgaste normal
- daños producidos por accidente
- instalación defectuosa o mala manipulación
- mal uso, negligencia
- falta de mantenimiento
- uso de algún accesorio o pieza no vendida por Recambios Marinos
- funcionamiento con gasolina, aceites o lubricantes que no son adecuados para ese tipo de producto (no recomentado).

La responsabilidad de garantía de Recambios Marinos quedará anulada si la pieza está dañada por:

- inundación
- fuego
- tormenta
- cualquier otro elemento climatológico natural
- cuando el número de modelo u otra identificación haya sido alterada, modificada o borrada.

Recambios Marinos no será responsable de ningún cargo por:

- mano de obra
- combustible
- servicios de grúa o rampa
- remolcado
- desplazamiento
- otros gastos indirectos que resulten por causa del fallo del producto, por un defecto del mismo o por una demora razonable en corregir tal defecto.

Estos conceptos no están cubiertos por esta garantía.

Recambios Marinos se reserva el derecho de inspeccionar y determinar si la pieza ha fallado por causa de un defecto de fabricación. No desmonte ninguna pieza. La obligación de Recambios Marinos estará limitada a reparar, reemplazar o abonar el producto una vez se haya identificado como defectuoso a su total discreción. También se reserva el derecho de abonar el importe a su precio de compra, antes que reparar o reemplazar el producto o algún componente del mismo.

Las piezas están cubiertas por esta garantía únicamente en su periodo original. Una vez el periodo de garantía ha expirado, la garantía de cualquier pieza reparada o sustituida expira también. Recambios Marinos podrá quedarse las piezas que considere defectuosas.

Recambios Marinos no garantiza ni se responsabiliza del uso o resultado de utilización del producto en términos de su funcionamiento, fiablidad, etc. La totalidad del riesgo como resultado y funcionamiento del producto la asume el cliente.

La responsabilidad por cumplimiento de la garantía, estará limitado al precio de compra pagado por el producto.

Ningún concesionario de Recambios Marinos, agente o empleado está autorizado a hacer extensión o modificación alguna de esta política de garantías.

Proceso:

- Se deberá comunicar a Recambios Marinos cualquier defecto de producto que se encuentre dentro del periodo de garantía para obtener inmediatamente el impreso de solicitud de garantía y un número de RGA (expediente de garantía).
- Una vez Recambios Marinos haya recibido la solicitud de garantía y la pieza reclamada con el número de expediente, marcado en el embalaje de la pieza, se procederá a su revisión.
- Si el defecto está cubierto por la garantía, la pieza será reparada o reemplazada.
- Si se precisa reparación, deberán enviar a Recambios Marinos el producto a portes pagados con la prueba de compra.
- Cuando la pieza esté reparada, se devolverá por el sistema de envío determinado por Recambios Marinos.

Puede contactar con el Servicio Técnico de Recambios Marinos en:

garantias@recmar.es

Esta garantía comprende única y exclusivamente la garantía relacionada con el producto que le ha suministrado Recambios Marinos. Otras garantías o compromisos efectuados por cualquier persona no autorizada, no son vinculantes para Recambios Marinos a menos que se haya autorizado previamente por escrito.

EN

RECMAR WARRANTY POLICY

All products sold by **Recambios Marinos S.L.U.** must be installed and used by competent personnel under their exclusive responsibility. **Recambios Marinos S.L.U.** shall not be responsible for the consequences of the faulty or improper installation of any item that does not include installation solutions.

The fitter will be responsible for checking that the manufacturer recommendations have been followed correctly in terms of compatible uses.

Articles sold by **Recambios Marinos S.L.U.** are covered by legal warranty of conformity, in accordance with Royal Legislative Decree 1/2007, of 16 November, approving the recast text of the general law on consumer and user protection.

Recambios Marinos S.L.U distribute the products only to professionals and never to privates of final clients. The cost of installing the part would never be included in the price for which reason, **Recambios Marinos S.L.U** would never be responsible for its installation.

Articles sold by **Recambios Marinos S.L.U.** are covered by warranty for manufacturing defects for a limited period of time that may vary between 2 years and 3 months, depending on the product, application and type of boat it is installed on (7th/6th/5th list), except for the articles considered consumable, light bulbs, electrical products, batteries and others that are not covered at all. For information on the exact warranty period of an article, please contact the Sales Department.

In the case of damage caused during shipping, article 366 of the Code of Commerce will apply. The article says: “Claims to the delivery company may be made within 24 hours from receiving the goods. Once this term has elapsed, or the freight costs have been paid, claims to the delivery company with regard to the condition of the goods can no longer be made.” The goods that **Recambios Marinos S.L.U.** sends every day to its customers are examined before being packed to ensure their perfect integrity and avoid damage during shipping. Remember that it is essential to check the goods in the presence of the dispatcher. If the package is damaged, the dispatcher’s delivery note must mention what type (CONFORMING GOODS, UNLESS INSPECTED), and must be signed by you and by the dispatcher. If you receive damaged goods for these reasons you must notify both the dispatcher and **Recambios Marinos S.L.U.** to be able to make the claim to the relevant delivery company.

WARRANTY CLAIMS

Warranties are always subject to **Recambios Marinos S.L.U.** Technical Department’s assessment. The assessment will be carried out on **Recambios Marinos S.L.U.**’s premises or, if necessary, by the article’s manufacturer. In both cases, the article must be physically on **Recambios Marinos S.L.U.**’s premises in Viladecans. Assessment time will not exceed 30 calendar days from receiving the article.

To return the faulty item, visit www.recambiosmarinos.es, go to your account and select PROCESS WARRANTY in the private section. From there you will be able to download the file to claim the warranty of engines and parts and follow the instructions.

Recambios Marinos S.L.U. will not charge for the loan of the replacement during the warranty process.

WARRANTY EXCLUSIONS

Recambios Marinos S.L.U. shall not be responsible for product faults in the following cases:

- Normal wear and tear of a product. Installation faults or improper use.
- Installation of an article not designed for the model in question.
- Damage due to external causes (accidents, lightening, power surges...)
- Defects and consequences of transport.
- Alterations to installations or to boats intended for competitions.

If the warranty is refused, the customer may retrieve the faulty article by contacting **Recambios Marinos S.L.U.** via email and requesting that the article is returned to them within 7 calendar days from the day the warranty was refused.

Recambios Marinos S.L.U. does not apply the warranties offered from time to time by manufacturers.

RETURN POLICY FOR PARTS IN STOCK

To help our customers maintain their stock correctly, **Recambios Marinos S.L.U.** will allow any parts ordered by mistake to be returned.

Goods with a value below €30 may not be returned.

FORMAL REQUIREMENTS:

Goods returned must be accounted for in a delivery note. Neither the goods nor the packaging must be damaged. Goods that do not meet any of these requirements will not be accepted under any circumstance. Goods may be returned via the private section of the website www.recambiosmarinos.es

TERMS:

Goods must be returned maximum within 15 calendar days from the date the goods were shipped from our premises. The deadline to return goods will be maximum 15 calendar days from the date the return pre-authorisation number is received (it will be automatically provided by **Recambios Marinos S.L.U.** during the return process)

CONDITIONS:

Under no circumstances will **Recambios Marinos S.L.U.** accept the following articles**:**

- Footwear.
- Electrical goods.
- Custom-made goods.
- Anodes, anchors, chains, hoses.
- Obsolete or discontinued articles.
- Thrusters, pneumatics, paddle surfing boards and Parsun engines.
- Oils, paints, greases, liquids, including all cleaning and maintenance products in general.

DAMAGE DURING TRANSPORT:

Article 366 of the Code of Commerce will apply. The article says: “Claims to the delivery company may be made within 24 hours from receiving the goods. Once this term has elapsed, or the freight costs have been paid, claims to the delivery company with regard to the condition of the goods can no longer be made.”

The materials that **Recambios Marinos S.L.U.** sends every day to its customers are examined before being packed to ensure their perfect integrity and avoid damage during shipping. Remember that it is essential to check the goods in the presence of the dispatcher. If the package is damaged, the dispatcher’s delivery note must mention what type (conforming goods, unless inspected), and must be signed by you and by the dispatcher, if you receive damaged goods for these reasons you must notify both the dispatcher and **Recambios Marinos S.L.U.** to be able to make the claim to the relevant delivery company.

All previously authorised returned goods must be sent to **Recambios Marinos S.L.U.** visibly specifying the return number.

CREDITING:

Recambios Marinos S.L.U. will credit 90% of the amount originally charged of all returned goods (which comply with each and every formal requirement, terms and conditions). 10% is retained to cover the cost of returning the goods (handling, packaging, quality control...).

RESERVATION OF OWNERSHIP:

Recambios Marinos S.L.U. retains ownership of all goods it supplies until the buyer pays for them in full.

LIMITED WARRANTY OF THE RECAMBIOS MARINOS, S.L. PRODUCTS

The products of **Recambios Marinos S.L.U.** are warranted to be free from manufacturing defects for a period of:

2 years from the date of purchase for the NEW products

1 year for the REBUILT products.

Products used for commercial, rental or income producing activity are warranted for: 90 days.

In any case it will be essential to present the purchase invoice.

Recambios Marinos S.L.U. not warrant or make any representations in respect to installation errors made by a servicing dealer, servicing mechanic or the individual. This warranty applies to manufacturing defect only, it does not apply to the following:

- alteration, removal of parts,
- ajustments, tune-up
- damages due to accident
- improper installationor service
- misuse, negleck
- lack of maintenance
- uso of any accessory or part not sold by Recambios Marinos
- operation with fuels, oils or lubricants which are not suitable for use with the product.

Recambios Marinos liability under this warranty shall be terminated on any part damaged by:

- flood
- fire
- storm
- other natural acts
- where the model number and other identification has been altered, defaced or removed.

Recambios Marinos will not be liable for any charges like:

- labor charges
- fuel
- towing
- ramp
- lift
- trips
- special or indirect damages resulting from the product or caused by the defect or reasonable delay incorrecting the defect are not covered.

Recambios Marinos reserves the right to inspect and determine whether or not any part failed due to a manufacturing defect. Do not disassemble any parts. Recambios Marinos reserves de right to credit, refund your purchase price for the product rather than repair or replace the product or any part thereof.

Any part is covered only for the original warranty period. Once the warranty on the product has expired, the warranty on any replaced or repaired part also expires. We shall be allowed to keep parts it deems defective under this warranty.

Recambios Marinos does not warrant, guarantee or make any representations regarding the use or the results of the use of the product in terms of its correctness, realibility or otherwise. The entire risk as to the result and performance of the product is assumed by customer.

The liability to you for actual damages from any cause, will be limited to the purchase price paid for the product.

No Recambios Marinos dealer, agent or employee is authorized to make any modification or extension to this warranty.

Process:

- You are required to notify Recambios Marinos any defect within the applicable warranty period and immediately obtain a warranty application and a RGA number (warranty claim number).
- Upon we receive the completed warranty application and part claimed under this warranty with the RGA number marked on the shipping and packing of the part, Recambios Marinos will inspect the part for warranty coverage.
- Only when the defect is covered by the warranty will the part be repaired or replaced.
- If warranty service is required, you must deliver your product at your expense, with proof of purchase.
- When the repair is completed, Recambios Marinos will ship back. Shipping methods willbe determined by Recambios Marinos.

You can contact with our warranty departmnet through:

garantias@recmar.es

This warranty compromises the sole and entire warranty pertaining to the product furnished to you by Recambios Marinos. Any other representations or promises by any person are unauthorized and are not binding upon Recambios Marinos unless in writing.

IT

POLITICA DI GARANZIE RECMAR

Tutti i prodotti commercializzati da **Recmar S.R.L.** devono essere installati e utilizzati da personale competente sotto la sua esclusiva responsabilità. **Recmar S.R.L.** non è responsabile per le conseguenze di un'installazione difettosa o inadeguata di qualsiasi articolo che non includa soluzioni di installazione.

L'installatore è responsabile della verifica della corretta applicazione delle raccomandazioni del fabbricante in materia di compatibilità d'uso.

Gli articoli commercializzati dalla **Recmar S.R.L..** sono coperti dalla garanzia legale di conformità, conforme alle condizioni enunciate nel regio decreto legislativo 1/2007 del 16 novembre, approvazione del testo consolidato della legge generale per la difesa dei consumatori e degli utenti.

Recmar S.R.L. distribuisce gli articoli presenti nei suoi cataloghi solo a professionisti, mai a privati o cliente finale, l'importo dell'impianto non sarà mai incluso nel prezzo e quindi non sarà responsabile di quest'ultimo.

Gli articoli commercializzati dalla **Recmar S.R.L.** dispongono di una garanzia limitata per difetti di fabbricazione, i periodi possono variare da 2 anni a 3 mesi a seconda del prodotto applicazione e tipo di imbarcazione (elenco 7ª/ 6ª/ 5ª), scartando gli articoli considerati come consumabili lampadine, prodotti elettrici, batterie e altri che non hanno alcun periodo di tempo, se avete bisogno di conoscere il tempo esatto del prodotto contattare il reparto commerciale.

Per i danni causati al trasporto si applica l'articolo 366 del codice di commercio che recita: "Entro 24 ore dal ricevimento delle merci, può essere presentato un reclamo nei confronti della società di trasporto designata. Alla scadenza dei termini espressi o pagati, non sono ricevibili reclami contro il trasportatore in merito allo stato in cui la merce è stata consegnata." Il materiale che inviamo quotidianamente da **Recmar S.R.L.** ai nostri clienti viene esaminato prima di essere confezionato per la sua perfetta integrità ed evitare danni al trasporto. Si ricorda che è molto importante ispezionare i colli alla presenza del vettore. In caso di danneggiamento della cassa, sul bollettino di consegna del trasportatore deve figurare un'indicazione del tipo (CONFORME MERCE, SALVO ISPEZIONE) e deve essere firmato dall'utente e dal trasportatore, in caso di ricezione di materiale difettoso per questi motivi deve essere messo a verbale sia al trasportatore che alla **Recmar S.R.L.** per poter reclamare all'impresa di trasporto interessata.

RICHIESTA DI GARANZIA

La garanzia sarà sempre soggetta alla valutazione finale del Dipartimento Tecnico della **Recmar S.R.L.** Questa valutazione sarà effettuata presso la nostra sede o, se necessario, dal fabbricante dell'articolo, in entrambe le opzioni l'articolo deve essere fisicamente nella nostra sede centrale di Viladecans, il tempo per la risoluzione è un massimo di 30 giorni di calendario dalla ricezione.

Per inviare l'articolo difettoso, è necessario andare al sito www.recmar.it, andare al tuo account e selezionare la GARANZIA all'interno del settore privato, da qui è possibile scaricare il file per la richiesta di garanzie di motori e parti e seguire le istruzioni.

Recmar S.R.L. non assumerà alcun prestito di sostituzione durante il processo di garanzia.

ESCLUSIONI DI GARANTÍA

Recmar S.R.L. non può essere accusato come responsabile del difetto di fronte a:

- Normale usura di un prodotto.
- Difetti di installazione o uso improprio.
- Installazione di un articolo non destinato a quel modello.
- Danni dovuti a cause esterne (incidente, fulmine , fluttuazione di corrente…)
- Difetti e conseguenze connesse al trasporto.
- Modifiche in impianti o barche destinati alla competizione.

In caso di rifiuto della garanzia, il cliente ha la possibilità di recuperare il suo articolo difettoso contattandoci via e richiesta di rimborso entro 7 giorni di calendario dalla data in cui viene informato del rifiuto della garanzia.

Recmar S.R.L. non fa parte delle garanzie commerciali annunciate a volte dai produttori.

REGOLE PER I RESI MERCE

Recmar S.R.L., accetteranno i resi di merce se preventivamente autorizzati dalla Direzione. Si accetteranno i resi solo degli articoli che sono stati ordinati per errore.

Per errori del magazzino, del catalogo ecc. prego richiedere il modulo attraverso la mail barbara@recmar.it, specificando il motivo.

Non si accetteranno resi di materiale il cui importo sia inferiore a € 30,00

REQUISITI FORMALI:

La merce da restituire deve essere indicata in un documento di trasporto nel quale vanno trascritti, codici, quantità e descrizione e il riferimento della bolla originale di acquisto.

Il modulo per la richiesta di autorizzazione al reso lo potrà scaricare dal sito www.recmar.it e le verrà fornito un numero di pre-autorizzazione. Una volta compilato, il modulo dovrà essere inviato a postventa@recmar.es, allegando copia della bolla. La mancanza dei requisiti descritti, il reso non potrà essere accettato e verrà restituito al mittente con l'addebito delle spese di trasporto.

SCADENZE:

Il termine per la richiesta di autorizzazione al reso sarà di 15 giorni a partire dalla data di spedizione della merce e il tempo per la restituzione della merce sarà di 15 giorni a partire dalla data di pre-autorizzazione al reso comunicata dalla **Recmar S.R.L.**

CONDIZIONI:

Recmar S.R.L., non accetterà resi, qualunque sia il motivo per i seguenti articoli:

- Calzature
- Materiale elettrico
- Materiale su ordinazione extra catalogo
- Anodi, ancore, catene, tubi
- Articoli obsoleti o non più presenti a catalogo
- Eliche, gommoni, paddle surf e motori Parsun
- Olio, vernici, grasso, liquidi, inclusi tutti i prodotti di pulizia e manutenzione in generale.

DANNI CASUSATI DURANTE IL TRASPORTO:

Si applicheranno le regole indicate dall'art. 366 del Codice del Commercio che recita: Il reclamo contro la Ditta di trasporti può essere fatto entro le ventiquattrore dalla ricezione della merce. Trascorso tale termine, non potrà essere fatto alcun reclamo.

Il materiale che viene spedito giornalmente dalla **Recmar S.R.L.** ai propri clienti, è controllato prima di essere impacchettato al fine di preservarne la sua integrità ed evitare danni durante il trasporto. Si prega di controllare sempre l'integrità delle scatole e nel caso in cui ci siano dei danni esteriori, si prega di accettare sempre con riserva e di firmare unitamente al corriere la copia della bolla di consegna e trattenere una copia. Una copia di tutto va poi inviata alla **Recmar S.R.L.** per poterla inoltrare alla Ditta di Trasporti corrispondente.

Tutti resi di materiale preventivamente autorizzato, dovranno essere spediti alla **Recmar S.R.L.** in porto franco entro i termini concordati includendo la copia della bolla e la richiesta di reso accettata.

NOTE DI CREDITO:

Recmar S.R.L., procederà alla emissione delle note di credito per tutti quei resi che abbiano i requisiti formali precedentemente indicati per il 90% del valore originario. Il restante 10% verrà trattenuto a copertura dei costi di movimentazione, imballaggio , controllo qualità etc.

RISERVA DI PROPRIETÀ:

Recmar S.R.L. si riserva il diritto di proprietà di tutto il materiale venduto fino al pagamento totale delle relative fatture.

GARANZIA LIMITATA DI RECAMBIOS MARINOS, S.L.

I prodotti forniti da **Recambios Marinos S.L.U.** sono garantiti contro i difetti di materiale o di lavorazione per un periodo di:

2 anni dalla data di acquisto per prodotti del tutto NUOVI

1 anno per i RIGENERATI.

I prodotti utilizzati per finalità commerciali, il noleggio o uso aziendale, sono garantiti per un periodo di: 90 giorni.

Solo saranno coperti dalla garanzia i clienti che possono fornire la prova di acquisto della Recambios Marinos.

Recambios Marinos S.L.U. non copre in garanzia e rimane al margine di eventuali errori di installazione che potrebbero causare il concessionario, il servizio meccanico o il cliente finale. Questa garanzia copre solo i defetti di fabbricazione ed esclude i seguenti casi:

- modifica, smontaggio di parti
- rettifiche
- la normale usura
- danni accidentali
- un'installazione difettosa o uso improprio
- abuso, negligenza
- mancanza di manutenzione
- l'uso di qualsiasi accessori o componenti non venduti dalla Recambios Marinos
- da benzina, olio e lubrificanti che non sono adatti a questo tipo di prodotto (non raccomandato).

La responsabilità di garanzia della Recambios Marinos será se l'articolo è danneggiato dalle:

- inondazioni,
- incendi,
- tempeste,
- o elemento naturale climatico,
- o se il numero di modello o altro tipo di identifiazione è stato alterato, modificato o cancelato.

Recambios Marinos non sarà responsabile di tute le spese per:

- la manodopera,
- i servizi di carburante,
- gru o rampe,
- traino,
- viaggio,
- altri costi indiretti dovuti a causa di guasto del prodotto, un difetto dello stesso o di un termine ragionevole per correggere questo difetto.

Questi concetti non sono coperti da questa garanzia.

Recambios Marinos si reserva il diritto di ispezionare e determianre se la parte si é guastata a causa di un difetto di fabbricazione. Non smontare nessun pezzo. L'obbligo di Recambios Marinos è limitato a riparare, sostituire o rimborsare il prodotto una volta che è stato identificato como difettosso a sua unica discrezione. Si reserva altresì il diritto di pagare il prezzo di acquisto, piuttosto che riparare o sostituire il prodotto o qualsiasi componente. I pezzi sono coperti di garanzia solo per il suo periodo originale. Una volta che il perido di garanzia è scaduto, la garanzia su tutte le parte soggette a manutenzione automaticamente scade. Recambios Marinos puó tenersi i pezzi che considi difettosi secondo la politica di garanzia.

Recambios Marinos non garantisce ne si responsabilizza dell'uso o ai risultati di utilizzo del prodotto in termini di prestazioni, affidabilità, ecc. L'intero rischio come risultato e le prestazioni del prodotto, è a carico del cliente.

La responsabilità della Recambios Marinos verso il cliente per il complimento della garanzia, sarà limitata al prezzo di acquisto pagato per il prodotto.

Nessun rivenditore della Recambios Marinos, agente o dipendente è autorizzato ad apportare qualsiasi modifica o estensione di questa polizza di granzia.

Processo:

- Deve comunicare alla Recambios Marinos qualsiasi difetto di prodotto che si trova dentro del perido di garanzia alla Recambios Marinos per ottenere immediatamente l'impresso di sollecito di garanzia e un numero di RGA (numero di granzia).
- Una volta Recambios Marinos ha ricevuto la richiesta di garanzia e il pezzo reclamato con il numero di file RGA e l'imballo originale Recmabios Marinos procederá alla sua ispezione.
- Solo se il difetto entra in garanzia, il pezzo verrà riparato o sostituito, a discrezione della Recambios Marinos.
- In caso si richieda la riparazione, bisognerá inviare il prodotto alla Recambios Marinos utilizzando il nostro corriere prepagato con la prova di acquisto.
- Quando il materiale viene riparato, verrà rispedito all'indirizzo che avrá indicato. Il sistema di invio sarà determinato dalla Recambios Marinos.

È possibile contattare il nostro servizio tecnico della Recambios Marinos attraverso la mail:

garantias@recmar.es

Tale garanzia comprende solo ed esclusivamente la garanzia relazionata con il prodotto che ha somministrato la Recambios Marinos. Altre garanzie o impegni assunti da qualsiasi altra persona non autorizzata, non sono vincolanti per la Recambios Marinos a meno di previa autorizzazione scritta.

FR

POLITIQUE DE GARANTIE RECMAR

Tous les produits vendus par **Recambios Marinos S.L.U.** doivent être installés et utilisés par du personnel compétent sous sa seule responsabilité.

Recambios Marinos S.L.U. n'est pas responsable des conséquences d'une installation défectueuse ou inappropriée de tout élément n'incluant pas les solutions d'installation.

L'installateur sera responsable de la vérification de l'application correcte des recommandations du fabricant concernant la compatibilité d'utilisation.

Les articles vendus par **Recambios Marinos S.L.U.** bénéficient de la garantie légale de conformité, conformément aux conditions énoncées dans le décret législatif royal 1/2007 du 16 novembre, portant approbation du texte consolidé de la loi générale de la défense des consommateurs et des utilisateurs.

Les articles vendus par **Recambios Marinos S.L.U.** ont une garantie limitée pour les défauts de fabrication, les périodes peuvent varier de 2 ans à 3 mois en fonction de l'application du produit et du type de navire où ils ont été installés (7ème / 6ème / 5ème liste), excluant les articles considérés comme des consommables, ampoules, produits électriques, batteries et autres.

Si vous ne connaissez pas la durée de garantie exacte du produit, contactez le service commercial.

Pour les dommages causés au cours du transport, les dispositions de l'article 366 du code de commerce seront appliquées, ce qui stipule:

Vingt-quatre heures maximum après la réception de la marchandise, une réclamation doit être adressée à la société de transport.

Après que les conditions aient été exprimées ou que le fret eu été payé, aucune réclamation ne sera acceptée contre le transporteur auprès de l'État.

Lorsque la marchandise a été livrée. Le matériel que nous envoyons quotidiennement de **Recambios Marinos S.L.U.** à nos clients est examiné avant l'emballage pour une intégrité parfaite et éviter les dommages de transport. N'oubliez pas qu'il est très important d'inspecter le chargement en présence du transporteur.

Lorsque des dommages sont constatés sur le colis, ils doivent figurer sur le bon de livraison du transporteur.

Une mention du type (EN FONCTION DE LA MARCHANDISE, SAUF INSPECTION), et doit être signé par vous et le transporteur, s'il est reçu défectueux le matériel doit être enregistré pour ces raisons à la fois par le transporteur et par **Recambios Marinos S.L.U.** pour qu'une réclamation soit faite la compagnie de transport correspondante.

DEMANDE DE GARANTIE

La garantie sera toujours soumise à l'évaluation finale du service technique de **Recambios Marinos S.L.U.** Cette évaluation sera effectuée dans nos installations ou, si nécessaire, par le fabricant de l'article, dans les deux cas, l'article doit être physiquement dans nos locaux de Viladecans, le délai de résolution sera de 30 jours maximum à partir de sa réception.

Pour envoyer l'article défectueux, vous devez vous rendre sur le site www.recambiosmarinos.es, accéder à votre compte et sélectionner PIECES DE RETOUR.

Dans l'espace privé, vous pouvez télécharger le fichier pour demander des garanties de moteurs et de pièces et suivre les instructions.

Si tel est votre souhait, **Recambios Marinos S.L.U.** n'assumera aucun prêt de remplacement pendant le processus de garantie.

EXCLUSIONS DE GARANTIE

Recambios Marinos S.L.U. ne sera pas responsable des défauts suivants:

- Usure normale d'un produit.
- Défauts d'installation ou d'utilisation inadéquate.
- Installation d'un article non destiné à ce modèle.
- Dommages dus à une cause externe (accident, foudre, fluctuation de courant…)
- Défauts et conséquences liés au transport.
- Modifications d'installations ou de bateaux destinés à la compétition.

En cas de refus de la garantie, le client a la possibilité de récupérer son article défectueux en nous contactant par courrier électronique pour demander le retour à ses frais de celui-ci dans les 7 jours calendaires suivant la date à laquelle vous avez été informé du rejet de la garantie.

Recambios Marinos S.L.U. ne participe pas à des garanties commerciales parfois annoncées par les fabricants.

RÈGLES POUR LE RETOUR DE PIÈCES EN STOCK

Afin d'aider nos clients à maintenir un stock correct, **Recambios Marinos S.L.U.** acceptera les retours des pièces commandées par erreur. Les retours de matériel dont le montant est inférieur à 30 € ne seront pas acceptés.

EXIGENCES FORMELLES:

Le matériel à retourner doit être apparaitre dans un bon de livraison ou une facture.

Ni le matériel ni l'emballage ne doivent présenter de dommage. Aucun retour ne sera accepté qui ne respecte aucun de ces points. Le remboursement sera traité dans l'espace privé à partir du site Web www.recambiosmarinos.es

DÉLAIS:

Le délai maximum pour demander le retour sera de 15 jours calendaires à compter de la date d'envoi de la marchandise de nos installations. La période pour le retour de la marchandise sera au maximum de 15 jours à compter de la date de réception du numéro d'autorisation de retour (vous serez informé automatiquement par **Recambios Marinos S.L.U.** au cours du processus de retour)

CONDITIONS:

Recambios Marinos S.L.U. , n'acceptera en aucun cas le retour de ces articles:

- Chaussures.
- Matériel électrique.
- Matériel commandé sur demande.
- Anodes, ancres, chaîne, tuyaux.
- Les articles obsolètes ou abandonnés.
- Hélices, pneumatiques, blocs moteurs, Paddle, Surf et moteurs Parsun.
- Huiles, peintures, graisses, liquides, y compris les produits de nettoyage et d'entretien en général.

DOMMAGES CAUSÉS PAR LE TRANSPORT:

Les dispositions de l'article 366 du Code de commerce seront appliquées, qui stipule: «Dans les vingt-quatre heures après la réception de la marchandise, une réclamation doit être faite à la compagnie de transport assignée.

Une fois que les conditions ont été exprimées ou que le fret est payé, aucune réclamation ne sera acceptée contre le transporteur sur l'état dans lequel les marchandises ont été livrées.

Le matériel que nous envoyons chaque jour de **Recambios Marinos S.L.U.** à nos clients est examiné avant d'être emballé pour une intégrité parfaite et éviter les dommages de transport. Rappelez-vous qu'il est très important d'inspecter les colis en présence du transporteur. Lorsque des dommages sur le colis sont observés, vous devez noté une mention du type (selon la marchandise, sauf inspection), et doit être signé par vous et le transporteur, s'il est reçu défectueux le matériel doit être enregistré pour ces raisons à la fois par le transporteur et par **Recambios Marinos S.L.U.** pour qu'une réclamation soit faite la compagnie de transport correspondante.

Tous les retours de matériel préalablement autorisés seront envoyés à **Recambios Marinos S.L.U.** indiquant à l'endroit visible le numéro de retour.

ABONNEMENTS:

Recambios Marinos S.L.U. procédera au paiement de toutes les déclarations (qui respectent chacune des conditions de forme, modalités et conditions) pour un montant égal à 90% de la facture originale. Les 10% restants seront destinés à supporter les coûts occasionnés par les retours (manutention, emballage, contrôle de qualité...).

RESERVE DE PROPRIETE:

Recambios Marinos S.L.U. se réserve le droit de disposer de tout le matériel fourni jusqu'à concurrence du paiement intégral par l'acheteur, le transfert de leur propriété ne pouvant intervenir avant cette échéance.

GARANTIE LIMITÉE DE RECAMBIOS MARINOS, S.L.U.

Les produits fournis par Recambios Marinos S.L.U. sont garantis contre tout défaut de matériel ou de fabrication pendant une période de :

2 ans à compter de la date d'achat pour les produits NEUFS.

1 an pour les produits REBUILTÉS.

Les produits utilisés à des fins commerciales, locatives ou professionnelles sont garantis pendant une période de 90 jours.

Dans tous les cas, il est indispensable de présenter la facture d'achat.

Recambios Marinos S.L.U. ne couvre pas la garantie et n'est pas responsable des erreurs d'installation qui peuvent être causées par le revendeur, le service technique, le mécanicien ou le client final. Cette garantie ne concerne que les défauts de fabrication et exclut les cas suivants :

- modification, démontage de pièces
- ajustements
- l'usure normale
- dommages causés par un accident
- installation défectueuse ou mauvaise manipulation
- mauvaise utilisation, négligence
- manque d'entretien
- l'utilisation d'un accessoire ou d'une pièce non vendue par Recambios Marinos
- l'utilisation d'essence, d'huiles ou de lubrifiants non adaptés à ce type de produit (déconseillés).

La responsabilité de Recambios Marinos en matière de garantie est annulée si la pièce est endommagée par :

- inondation
- incendie
- tempête
- tout autre élément météorologique naturel
- lorsque le numéro de modèle ou toute autre identification a été altéré, modifié ou oblitéré.

Recambios Marinos ne sera pas responsable des frais de :

- la main-d'œuvre
- le carburant
- les services de remorquage ou de rampe
- remorquage
- les déplacements
- autres coûts indirects résultant de la défaillance du produit, d'un défaut du produit ou d'un retard raisonnable dans la correction de ce défaut.

Ces éléments ne sont pas couverts par la présente garantie.

Recambios Marinos se réserve le droit d'inspecter et de déterminer si la pièce est défectueuse en raison d'un défaut de fabrication. Ne démontez aucune pièce. L'obligation de Recambios Marinos se limitera à réparer, remplacer ou créditer le produit une fois qu'il aura été identifié comme défectueux, à sa seule discrétion. Recambios Marinos se réserve également le droit de créditer le montant du prix d'achat, plutôt que de réparer ou de remplacer le produit ou toute partie de celui-ci.

Les pièces ne sont couvertes par cette garantie que pendant la période de garantie initiale. Une fois la période de garantie expirée, la garantie sur les pièces réparées ou remplacées expire également. Recambios Marinos peut conserver les pièces qu'il considère comme défectueuses.

Recambios Marinos ne garantit pas et n'est pas responsable de l'utilisation ou du résultat de l'utilisation du produit en termes de performance, de fiabilité, etc. L'intégralité du risque lié au résultat et à la performance du produit est assumée par le client.

La responsabilité pour l'exécution de la garantie est limitée au prix d'achat payé pour le produit.

Aucun revendeur, agent ou employé de Recambios Marinos n'est pas autorisé à étendre ou à modifier cette politique de garantie.

Procédure :

- Recambios Marinos doit être informé de tout défaut du produit qui entre dans la période de garantie afin d'obtenir immédiatement le formulaire de demande de garantie et un numéro RGA (dossier de garantie).
- Une fois que Recambios Marinos a reçu la demande de garantie et la pièce réclamée avec le numéro de dossier, marqué sur l'emballage de la pièce, il procédera à son examen.
- Si le défaut est couvert par la garantie, la pièce sera réparée ou remplacée.
- Si une réparation est nécessaire, le produit doit être envoyé à Recambios Marinos en port payé avec la preuve d'achat.
- Une fois la pièce réparée, elle sera renvoyée par le système d'expédition déterminé par Recambios Marinos.

Vous pouvez contacter le service technique de Recambios Marinos à l'adresse suivante

garantias@recmar.es

Cette garantie couvre uniquement et exclusivement la garantie liée au produit qui vous a été fourni par Recambios Marinos. Les autres garanties ou engagements pris par une personne non autorisée ne sont pas contraignants pour Recambios Marinos, sauf autorisation écrite préalable.

Coordinación: Carlos Sánchez
Diseño y maquetación: Leni Fernández
Impresión: www.ibericagrafica.es

BARCELONA

Jocelyn Bell, 26
Pol. Ca n'Alemany
08840 Viladecans (Barcelona)
Tel. 900 841 013 - 93 633 34 80
Fax 93 662 66 59

International
phone: (+34) 93 662 66 55
Fax (+34) 93 662 66 59

info@recambiosmarinos.es
www.recambiosmarinos.es

GIRONA

C/ Gironés, 5
Pol. Ind. El Plà
17486 Castelló d'Empúries (Girona)
Tel. (+34) 972 158 809

girona@recmar.es

CANARIAS

Laura Grote de la Puerta, 3, Nave 5
Pol. Industrial El Mayorazgo
38110 Santa Cruz de Tenerife
Tel. (+34) 922 621 499

canarias@recmar.es

ITALIA

RECMAR SRL
Via Israele 10 H
Zona Industriale Settore 7
07026 Olbia (OT)

Tel. (+39) 0789 51962
Fax (+39) 0789 600177
sales@recmar.it